ZC130□, ZC153□

Solid State Type Sensor Switch

Applicable cylinders

●**Knock cylinders double acting type** ●**Multi mount cylinders** ●**Pen cylinders** ●**DYNA cylinders** ●**SD cylinders** ●**TDA ϕ 6 [0.236in.]** ●**AMT** ●**ARTB** ●**ACY** (For the intermediate stopper) ●**ORV** ●**ORK ϕ 16 [0.630in.]** ●**RAP** ●**RAN** ●**Swing cylinders** ●**Air Hands CHDUL** ●**SHM**

Specifications

Item / Model	ZC130□	ZC153□
Wiring type	2-lead wire	3-lead wire
Power supply voltage	—	DC4.5～28V
Load voltage	DC10～28V	DC4.5～28V
Load current	4～50mA	100mA MAX.
Consumption current	—	10mA MAX. (DC24V)
Internal voltage drop Note 1	3.5V MAX.	0.5V MAX. (At 50mA load current)
Leakage current	1mA MAX. (DC24V)	50μA MAX. (DC24V)
Response time	1ms MAX.	
Insulation resistance	100MΩ MIN. (At DC500V Megger, between case and lead wire end)	
Dielectric strength	AC500V (50/60Hz) in 1 minute (Between case and lead wire end)	
Shock resistance Note 2	294.2m/s² [30G] (Non-repeated shock)	
Vibration resistance Note 2	88.3m/s² [9G] (Total amplitude 1.5mm [0.06in.], 10～55Hz)	
Environmental protection	IP67 (IEC standard), JIS C0920 (Water-proof type)	
Operation indicator	When ON: Red LED indicator lights up	
Lead wire Note 3	PVC 0.2SQ×2-lead× ℓ	PVC 0.2SQ×3-lead× ℓ
Ambient temperature	0～60°C [32～140°F]	
Storage temperature range	−10～70°C [14～158°F]	
Mass	20g [0.71oz.] (For lead wire length A: 1000mm)	

Notes: 1. The internal voltage drop depends on load current.
2. Measured by Koganei test standard.
3. Lead wire length ℓ : A; 1000mm [39in.], B; 3000mm [118in.]

※ This product is not resistant to lightning surge of the EMC standard (EN61000-6-2・EN60947-5-2).
Prepare protection measures for lightning surge in the system.

Internal Circuit

ZC130□

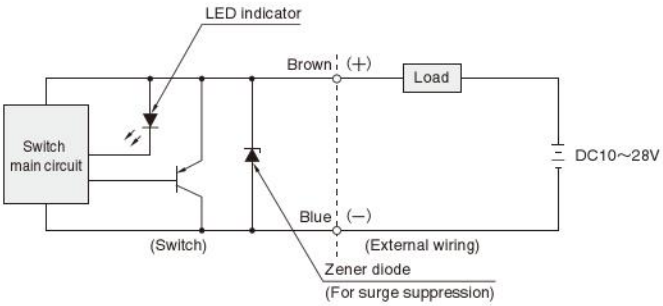

ZC153□

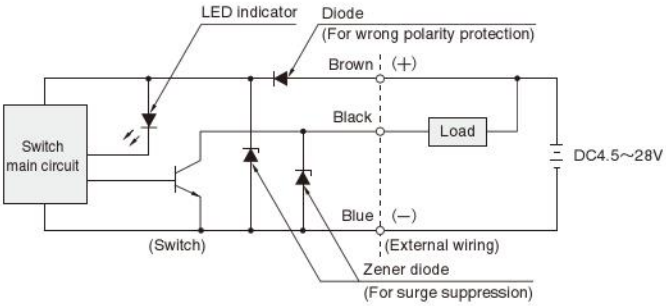

Dimensions (mm)

ZC130□

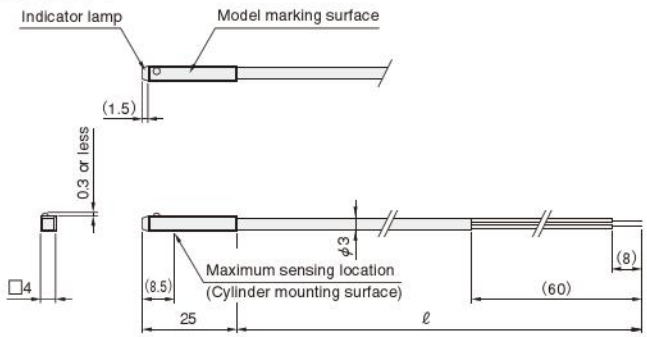
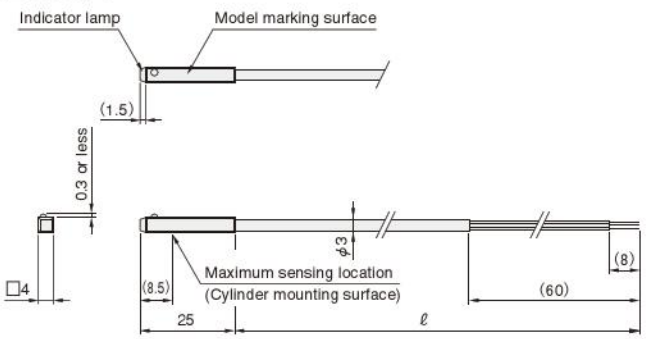
ZC153□