Solenoid Valves 112, 182 Series

By using the external pilot type valves, the 112, 182 series offers diverse functions of 2-, 3- port valves to achieve multiple functions and excellent performance in a compact body.

●112E1 and 182E1 for positive pressure applications

Ensures stable switching from low to high pressure (0～0.7MPa [0～102psi.]). Due to having no restrictions on connection port locations and flow direction, this series valve can be used as a 2-, 3-port valve for both the NC (normally closed) and NO (normally open) types, as well as for selector valves (dual-pressure switching valves) or divider valves.

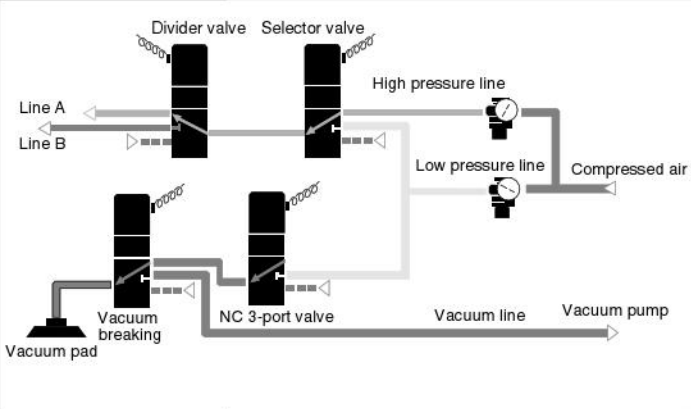

●V112E1 and V182E1 for vacuum applications

As with positive pressure valves, this is a 2-, 3-port valve that puts no restrictions on connection port locations and flow direction, for both the NC (normally closed) and NO (normally open) types. Since this type can be used for both vacuum and positive pressure applications, it can serve as a vacuum breaking valve.

※Other vacuum valves are also available. For details, see p.852.

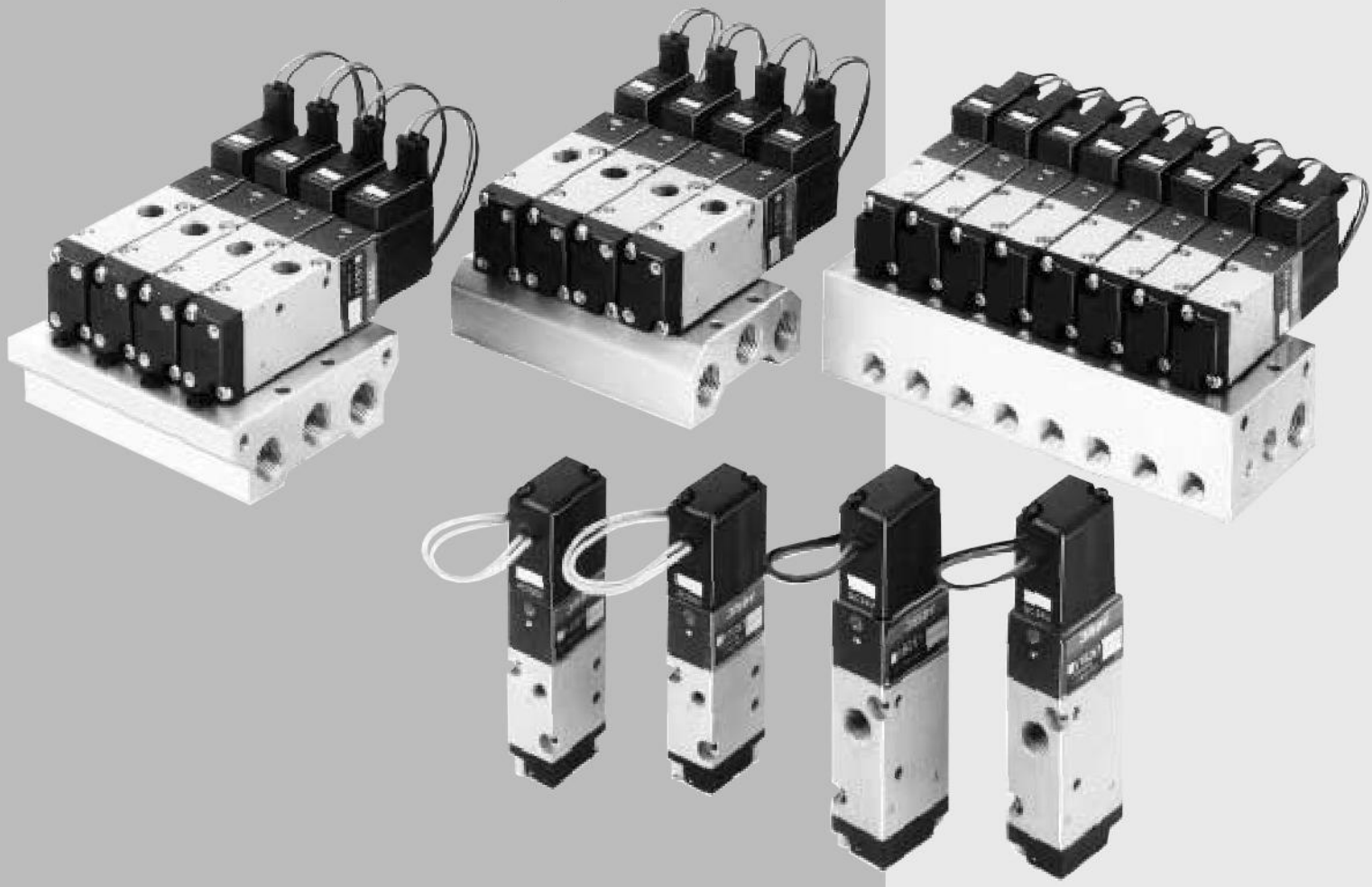

112, 182 Series Basic Models and Configuration

Single unit

112 series		182 series	
For positive pressure	For vacuum	For positive pressure	For vacuum
112E1	V112E1	182E1	V182E1

Manifold

112M series	182M series
112M□F—F type (1(P), 3(R), X(P2)) manifold	**182M□F**—F type (1(P), 3(R), X(P2)) manifold
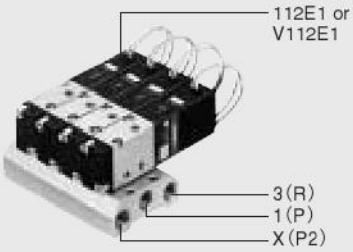	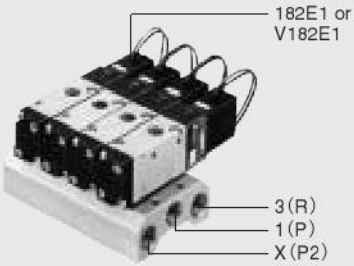
112M□FE—FE type (1(P), 3(R), X(P2), PR) manifold	**182M□FE**—FE type (1(P), 3(R), X(P2), PR) manifold
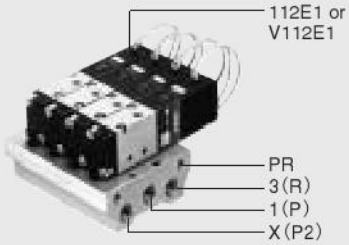	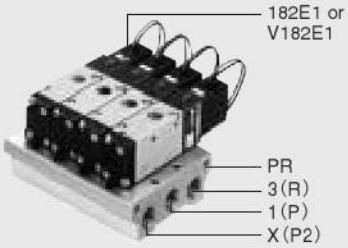
112M□A—A type (all ports) manifold	**182M□A**—A type (all ports) manifold
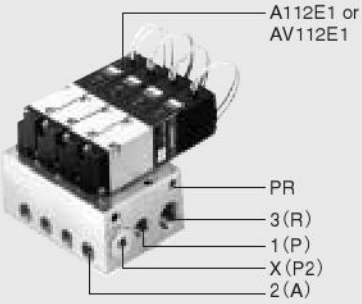	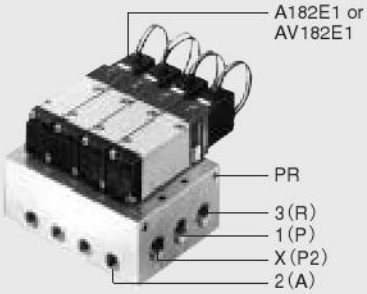

112, 182 Series Solenoid Valve Order Codes

2-, 3-port valve Number of ports

3-port

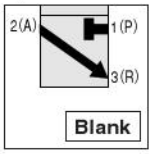

2-port

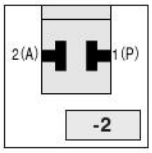

Manual override

Non-locking type

Locking protruding type

Wiring type

●Lead wire length: 300mm [11.8in.] is standard.

Grommet type

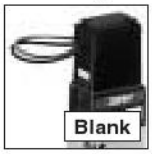

Straight connector with LED indicator

L connector with LED indicator

			Basic model	-2	-83	-PSL -PLL	Voltage
112 series	For positive pressure	Direct piping for 112M□F, FE	112E1	-2	-83	-PSL -PLL	DC12V DC24V AC100V AC200V
		For 112M□A	A112E1				
	For vacuum	Direct piping for 112M□F, FE	V112E1				
		For 112M□A	AV112E1				
182 series	For positive pressure	Direct piping for 182M□F, FE	182E1	-2	-83	-PSL -PLL	DC12V DC24V AC100V AC200V
		For 182M□A	A182E1				
	For vacuum	Direct piping for 182M□F, FE	V182E1				
		For 182M□A	AV182E1				

●When ordering the non-ion specification, enter **-NCU** after the basic model code.

Additional Parts (To be ordered separately)

Muffler

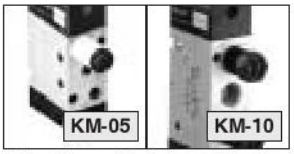

●For direct piping
●Not available for manifold mounting.

Mounting base

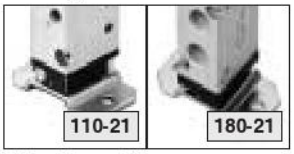

●For direct piping

Block-off plate

● □ M □-BP

112 — For 112M
182 — For 182M

F — For F type manifold
FE — For FE type manifold
A — For A type manifold

112, 182 Series Manifold Order Codes

■ 2-, 3-port valve Number of ports

3-port

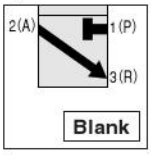

2-port

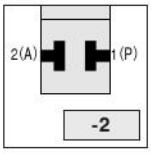

■ Manual override

Non-locking type

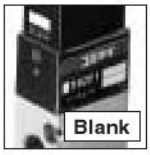

Locking protruding type

■ Wiring type

Grommet type

Straight connector with LED indicator

L connector with LED indicator

●Lead wire length: 300mm [11.8in.] is standard.

Straight connector with LED indicator

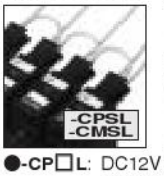

L connector with LED indicator

●**-CP□L**: DC12V and DC24V positive side, and AC100V, AC200V.
●**-CM□L**: DC12V and DC24V negative side.

Manifold model	Number of units		Station	Basic model				Voltage
112M	2 ⋮ 20	F FE	stn.□ ⋮ stn.□	112E1	-2	-83	-PSL -PLL -CPSL -CMSL -CPLL -CMLL	DC12V DC24V AC100V AC200V
				V112E1				
		A		A112E1				
				AV112E1				
182M	2 ⋮ 20	F FE	stn.□ ⋮ stn.□	182E1	-2	-83	-PSL -PLL -CPSL -CMSL -CPLL -CMLL	DC12V DC24V AC100V AC200V
				V182E1				
		A		A182E1				
				AV182E1				

●Valve mounting location from the left-hand side when facing the 2(A) port.

●Specify the valve model for each station.
●Enter **-BP** when closing a station with a block-off plate without mounting a valve.
●Positive pressure and vacuum valves can be used on the same manifolds, but they cannot be mounted together.
●When ordering the non-ion specification, enter **-NCU** after the basic model code.

●Pre-wired common terminal for AC100V and AC200V is either **-CPSL** or **-CPLL**.

Made to Order

The 112,182 series includes made to order items for further system development.
For details, see p.379.

Straight connector with LED indicator

●Without lead wire
●Connector and contacts included

L connector with LED indicator

●Without lead wire
●Connector and contacts included

Lead wire length

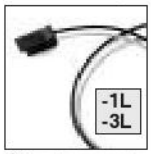

●For plug connector
●Length (mm) **-1L**: 1000 [39in.]
-3L: 3000 [118in.]

DIN connector

●Cannot be used with **-L**.

LED indicator with built-in varistor

●Cannot be used with **-39**.

Built-in interface unit

●Enables direct control by output from micro computer or other logic devices.
●With LED indicator

Sub-base regulator

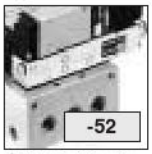

●Only for 182 series
●Regulates the pressure at each station on the manifold.

SOLENOID VALVES
182 SERIES

Basic Models and Functions

Basic model / Item		For positive pressure	For vacuum
	Direct piping, F, FE type manifolds	**182E1**	**V182E1**
	A type manifold	**A182E1**	**AV182E1**
Number of positions		2 positions	
Number of ports		2, 3 ports	
Valve function[Note]		Dual use for normally closed (NC) and normally open (NO) types	

Remark: For optional specifications and order codes, see p.367～368.
Note: For details, see the handling instructions, and precautions on p.381.

Specifications

Item		For positive pressure	For vacuum
Basic model	Direct piping, F, FE type manifolds	**182E1**	**V182E1**
	A type manifold	**A182E1**	**AV182E1**
Media		Air	
Operation type		External pilot type	
Effective area〔Cv〕 mm²		10.2〔0.57〕	
Port size [Note 1]	Main	Rc1/8	
	Pilot	M5×0.8	
Lubrication		Not required	
Operating pressure range MPa {kgf/cm²} [psi.]	Main	0～0.7 {0～7.1} [0～102]	−750mmHg [−29.53in.Hg] ～0.15 {1.5} [22]
	Pilot	0.2～0.7 {2.0～7.1} [29～102]	
Proof pressure MPa {kgf/cm²} [psi.]		1.05 {10.7} [152]	
Response time[Note 2] ON/OFF ms	DC12V, DC24V	15/25 or below	
	AC100V, AC200V	15/15 or below	
Maximum operating frequency Hz		5	
Operating temperature range (atmosphere and media) °C [°F]		5～50 [41～122]	
Shock resistance m/s² {G}		1373.0 {140.0} (Axial direction 294.2 {30.0})	
Mounting direction		Any	

Notes: 1. For details, see the manifold connection port size on p.375.
2. Values when air pressure is 0.5MPa {5.1kgf/cm²} [73psi.].

Solenoid Specifications

Item / Rated voltage			DC12V	DC24V	AC100V		AC200V	
Type			Flywheel diode incorporated for surge suppression		Shading type			
Operating voltage range		V	10.8～13.2 (12±10%)	21.6～26.4 (24±10%)	90～132 (100 +32 -10 %)		180～264 (200 +32 -10 %)	
Current (when rated voltage is applied)	Frequency	Hz	———	———	50	60	50	60
	Starting	mA (r.m.s)	———	———	36	32	18	16
	Energizing	mA (r.m.s)	130 (1.6W) [140 (1.7W) with LED indicator]	65 (1.6W) [75 (1.6W) with LED indicator]	24	20	12	10
Allowable leakage current		mA	8	4	4		2	
Insulation resistance		MΩ	Over 100					
Wiring type and lead wire length	Standard		Grommet type：300mm [11.8in.]					
	Optional		Plug connector type：300mm [11.8in.] See made to order on p.379.					
Color of lead wire			Brown (+) Black (−)	Red (+) Black (−)	Yellow		White	
Color of LED indicator (optional)			Red		Yellow		Green	
Surge suppression (as standard)			Flywheel diode		Varistor			

Solenoid Valve Mass

g [oz.]

Basic model	Mass
182E1	105 [3.70]
A182E1	115 [4.06]
V182E1	105 [3.70]
AV182E1	115 [4.06]

Manifold Mass

g [oz.]

Manifold model	Mass calculation of each unit (n=number of units)	Block-off plate
182M□F	(42×n)+40 [(1.48×n)+1.41]	19 [0.67]
182M□FE	(60×n)+70 [(2.12×n)+2.47]	30 [1.06]
182M□A	(120×n)+120 [(4.23×n)+4.23]	30 [1.06]

Flow Rate

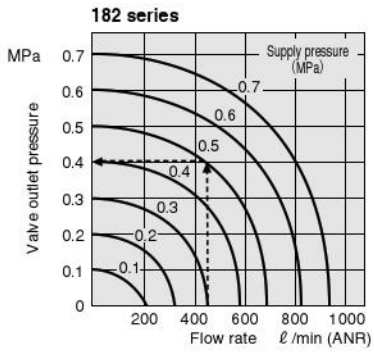

1MPa = 145psi., 1 ℓ/min = 0.0353ft³/min.

How to read the graph
When the supply pressure is 0.5MPa [73psi.] and flow rate is 460 ℓ/min [16.2ft³/min.] (ANR), the valve outlet pressure becomes 0.4MPa [58psi.].

Manifold Connection Port Size

Manifold model	Port	Location of connection port	Port size
182M□F	1(P)	Manifold	Rc1/4
	2(A)	Valve	Rc1/8
	3(R)	Manifold	Rc1/4
	X(P2)		
	PR	Valve	—
182M□FE	1(P)	Manifold	Rc1/4
	2(A)	Valve	Rc1/8
	3(R)	Manifold	Rc1/4
	X(P2)		
	PR		M5×0.8
182M□A	1(P)	Manifold	Rc1/4
	2(A)		Rc1/8
	3(R)		Rc1/4
	X(P2)		
	PR		M5×0.8

Operating Principles and Symbols

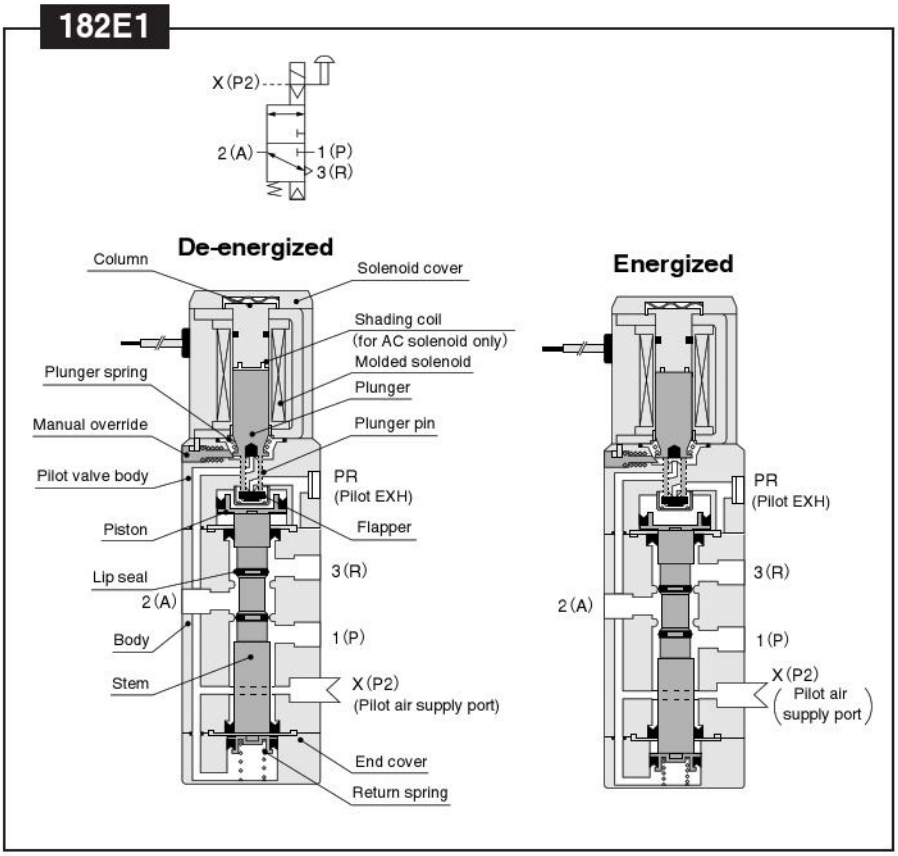

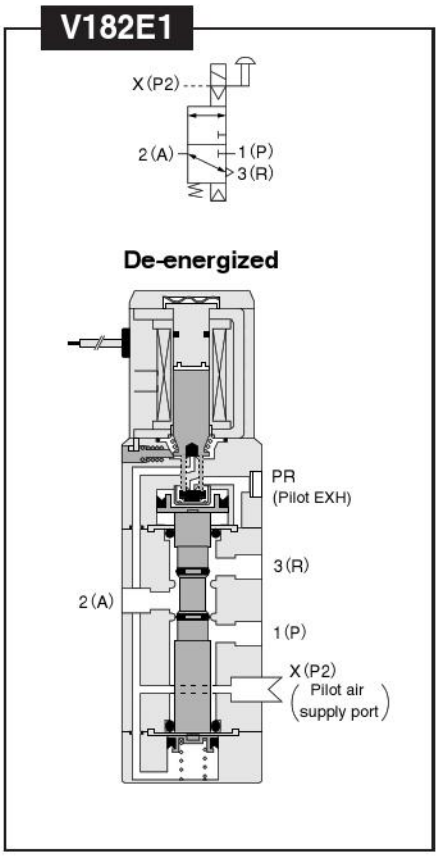

Major Parts and Materials

Parts		Materials
Valve	Body	Aluminum alloy (anodized)
	Stem	
	Lip seal	Synthetic rubber
	Flapper	
	Mounting base	Mild steel (zinc plated)
	Sub-base	Aluminum alloy (anodized)
	Plunger	Magnetic stainless steel
	Column	
Manifold	Body	Aluminum alloy (anodized)
	Block-off plate	Mild steel (nickel plated)
	Seal	Synthetic rubber

Remark: Materials that generate copper ions are not used for the non-ion specification.

Dimensions of Solenoid Valve (mm)

182E1
V182E1

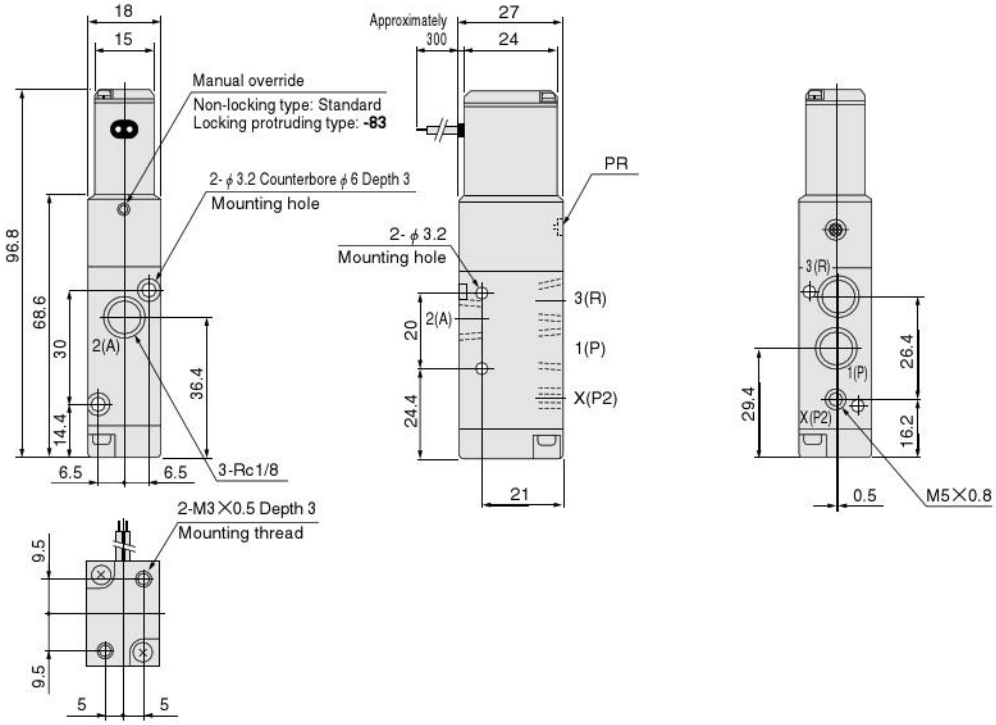

Additional Parts (To be ordered separately)

●Mounting base: **180-21**

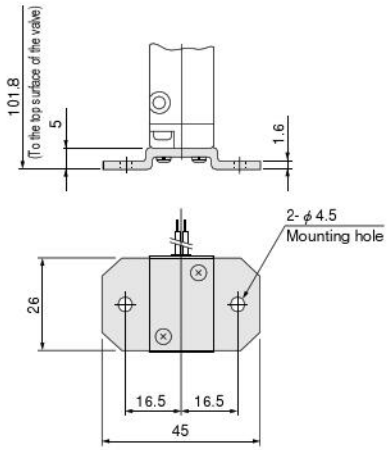

●Muffler: **KM-10**

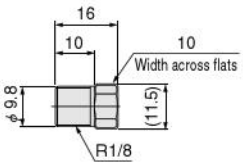

Options

●Locking protruding type manual override: **-83**

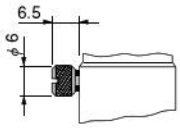

●Solenoid with straight connector: **-PSL**

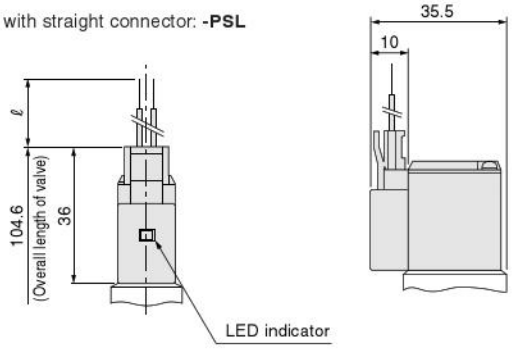

●Solenoid with L connector: **-PLL**

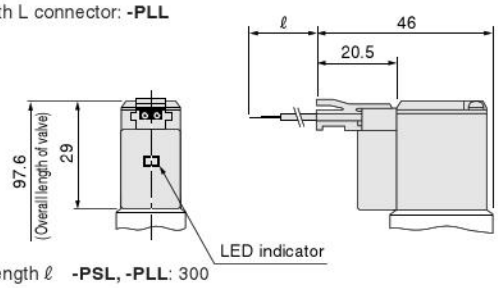

●Lead wire length ℓ **-PSL, -PLL**: 300
Made to order **-1L**: 1000, **-3L**: 3000

Made to Order

●Solenoid with DIN connector: **-39**

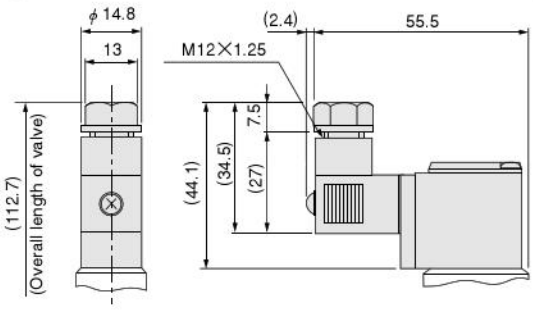

●Solenoid with LED indicator: **-L**

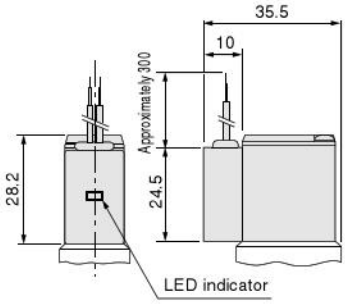

●Built-in interface unit: **-FA**

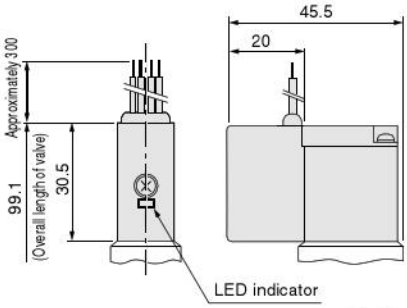

Dimensions of Manifold (mm)

182M□F

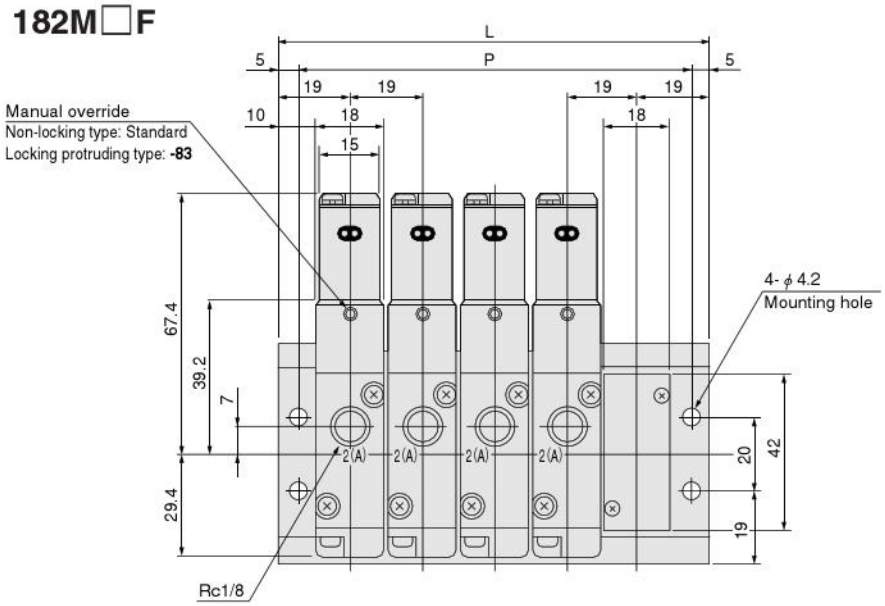

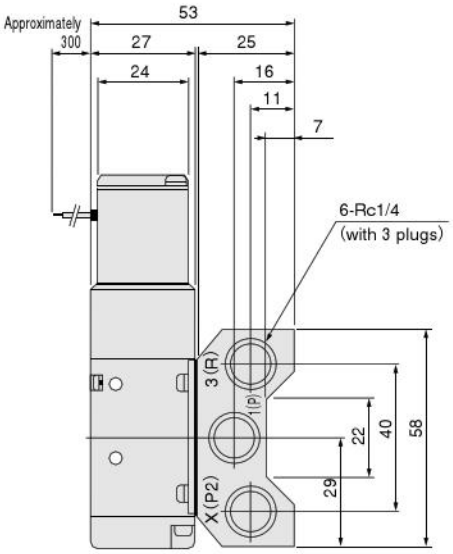

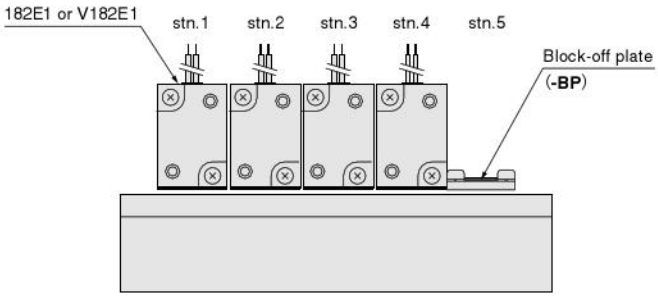

Unit dimensions

Model	L	P	Model	L	P
182M2F	57	47	12F	247	237
3F	76	66	13F	266	256
4F	95	85	14F	285	275
5F	114	104	15F	304	294
6F	133	123	16F	323	313
7F	152	142	17F	342	332
8F	171	161	18F	361	351
9F	190	180	19F	380	370
10F	209	199	20F	399	389
11F	228	218			

182M□FE

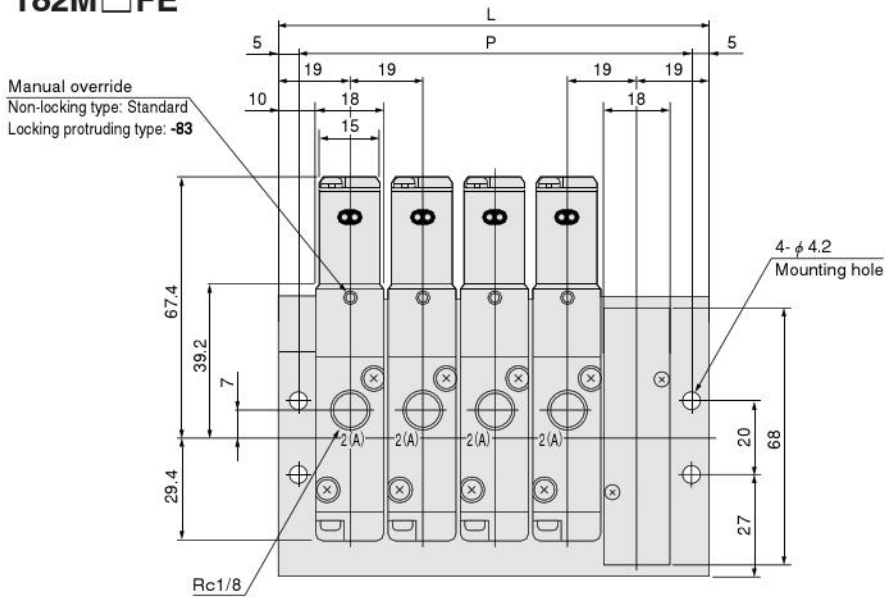

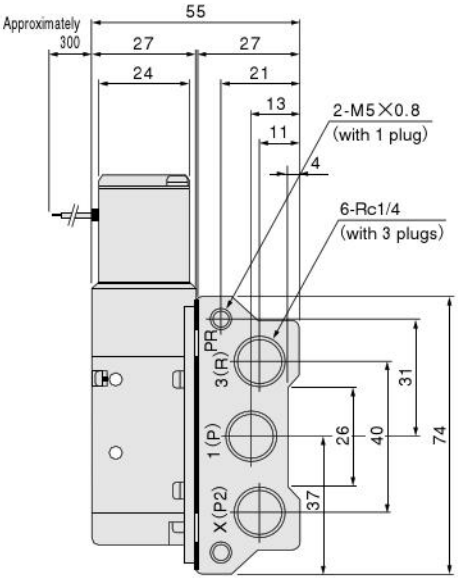

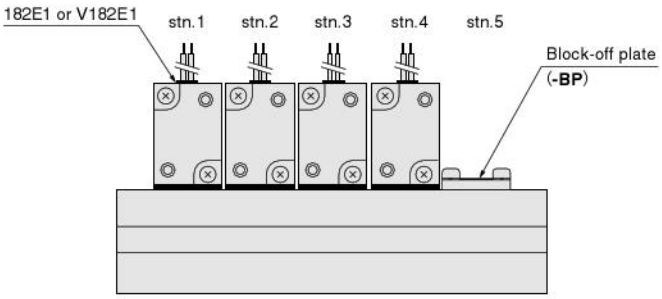

Unit dimensions

Model	L	P	Model	L	P
182M2FE	57	47	12FE	247	237
3FE	76	66	13FE	266	256
4FE	95	85	14FE	285	275
5FE	114	104	15FE	304	294
6FE	133	123	16FE	323	313
7FE	152	142	17FE	342	332
8FE	171	161	18FE	361	351
9FE	190	180	19FE	380	370
10FE	209	199	20FE	399	389
11FE	228	218			

Dimensions of Manifold (mm)

182M□A

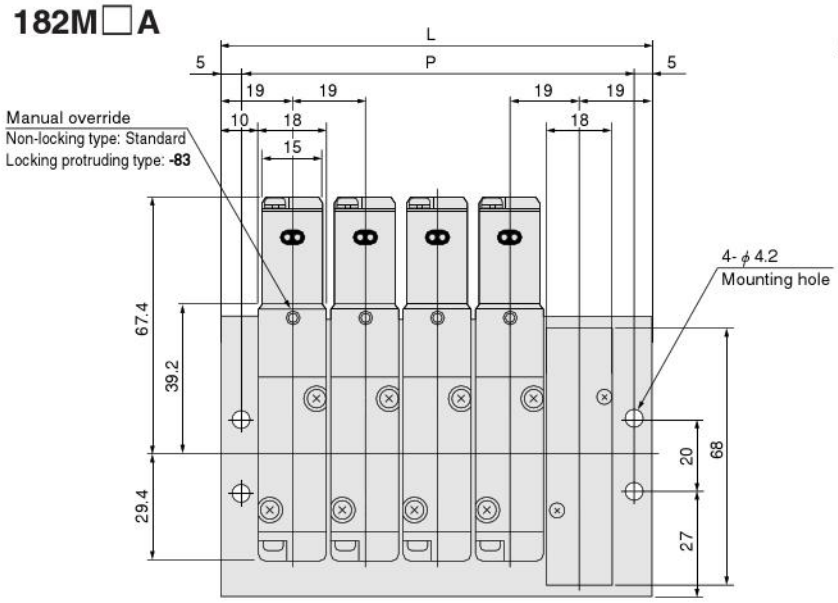

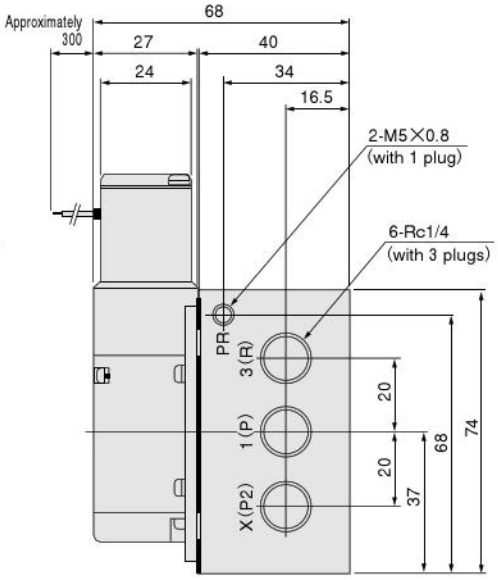

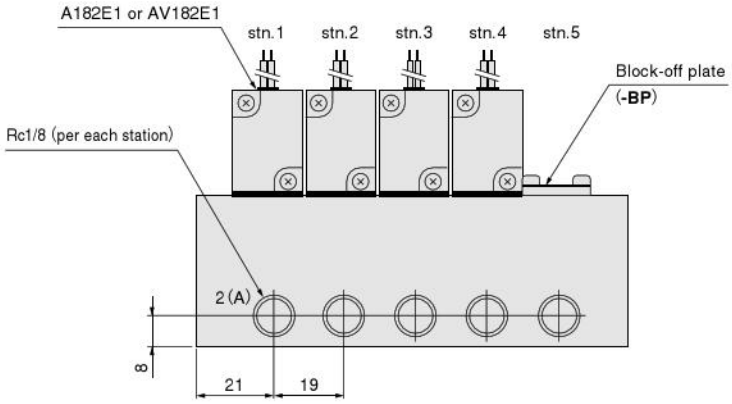

Unit dimensions

Model	L	P	Model	L	P
182M2A	57	47	12A	247	237
3A	76	66	13A	266	256
4A	95	85	14A	285	275
5A	114	104	15A	304	294
6A	133	123	16A	323	313
7A	152	142	17A	342	332
8A	171	161	18A	361	351
9A	190	180	19A	380	370
10A	209	199	20A	399	389
11A	228	218			

Options

●Locking protruding type manual override: **-83**

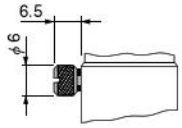

●Solenoid with straight connector: **-PSL**

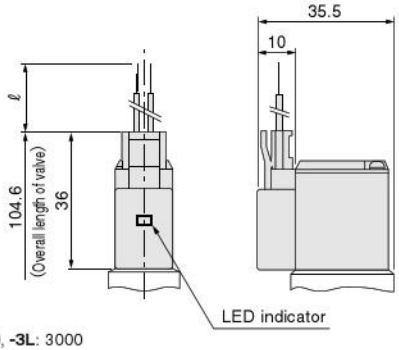

●Solenoid with L connector: **-PLL**

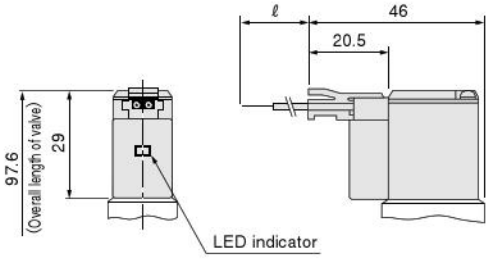

●Lead wire length ℓ **-PSL, -PLL:** 300
Made to order **-1L**: 1000, **-3L**: 3000

Made to Order

●Solenoid with DIN connector: **-39**

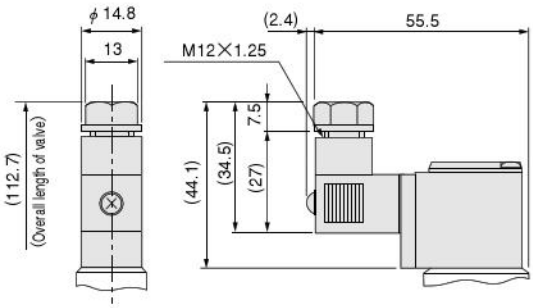

●Solenoid with LED indicator: **-L**

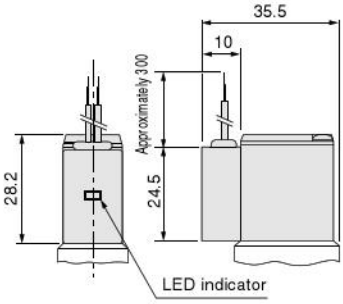

●Built-in interface unit: **-FA**

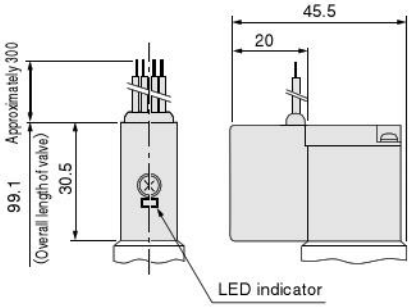

Made to Order

In the 112, 182 series solenoid valves, various types of made to order items are available.

Plug connector

Straight connector with LED indicator

- Without lead wire
- Connector and contacts included

L connector with LED indicator

- Without lead wire
- Connector and contacts included

- When ordering, enter **-PSLN** or **-PLLN** in place of the normal option code for the wiring type.

Lead wire length

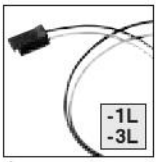

- For plug connector
- Length (mm) **-1L** : 1000 **-3L** : 3000

- For lead wire length, **-1L** is 1000mm [39in.] and **-3L** is 3000mm [118in.].
  When ordering, enter **-1L** or **-3L** following the wiring type option code.

DIN connector

A compact connector that is highly resistant to dust and water splashes.
Employs a self-stripping method that eliminates the need for de-sheathing the lead wire.

- When ordering, enter **-39** in place of the normal option code for the wiring type.
- A varistor for surge suppression equipped as standard. (For the AC100V and AC200V only. For the DC12V and DC24V, a flywheel diode for surge suppression is installed as standard equipment.)
- LED indicator is not available.

LED Indicator

The LED indicator for confirmation of operation is also available without a plug connector. This creates a clean monoblock look with the compact cover.

- When ordering, enter **-L** in place of the normal option code for the wiring type.
- A varistor for surge suppression equipped as standard. (For the AC100V and AC200V only. For the DC12V and DC24V, a flywheel diode for surge suppression is installed as standard equipment.)

Built-in Interface unit

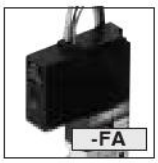

Includes an interface unit with photo transistor. Can be directly controlled by a microcomputer and logic devices, and is equipped with fully electric noise countermeasures and LED indicators.

- When ordering, enter **-FA** in place of the normal option code for the wiring type.
- Cannot be ordered in combination with any other solenoid option.
- Solenoid voltages are AC100V and AC200V only.

Sub-base regulator

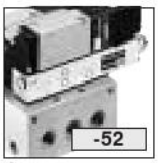

- Only for 182 series

Specifications

Item / Order code	-52(180MA-52)Note
Function	1(P) port pressure regulating type
Media	Air
Operating pressure range MPa {kgf/cm²} [psi.]	0.15～0.5 {1.5～5.1} [22～73]
Maximum operating pressure MPa {kgf/cm²} [psi.]	0.7 {7.1} [102]
Proof pressure MPa {kgf/cm²} [psi.]	1.05 {10.7} [152]
Operating temperature range °C [°F]	5～50 [41～122]
Mass g [oz.]	80 [2.82]

Note: The order code in parentheses ( ) is for the sub-base regulator only.

※For made to order details, see the solenoid valves 180 series on p.353～356.

Solenoid

Internal circuit

●DC12V, DC24V

Standard solenoid (Surge suppression)

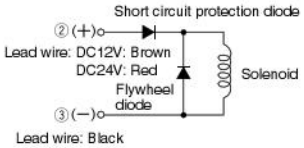

②and ③ are for with DIN connector (Order code: **-39**).

Solenoid with LED indicator (Surge suppression)
Order code: -PSL, -PLL

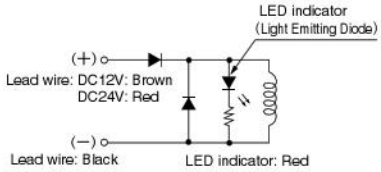

●AC100V, AC200V

Standard solenoid (Surge suppression)

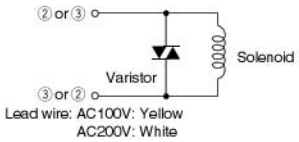

②and ③ are for with DIN connector (Order code: **-39**).

Solenoid with LED indicator (Surge suppression)
Order code: -PSL, -PLL

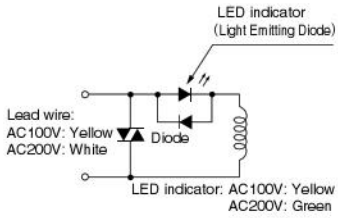

Cautions: 1. Do not apply megger between the lead wires.
2. The DC solenoid will not short circuit even if the wrong polarity is applied, but the valve will not operate.
3. Leakage current inside the circuit could result in failure of the solenoid valve to return or in other erratic operation. Always use it within the range of the allowable leakage current. If circuit conditions, etc. cause the leakage current to exceed the allowable leakage current, consult us.

Plug connector

Attaching and removing plug connector

Use fingers to insert the connector into the pin, push it in until the lever claw latches onto the protruded section of the connector housing, and complete the connection.
To remove the connector, squeeze the lever along with the connector, lift the lever claw up from the protruded section of the connector housing, and pull it out.

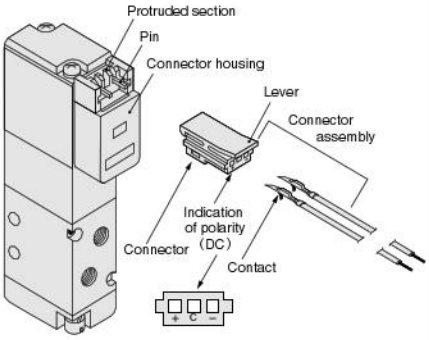

※Illustration shows the 110 series.

Crimping of connecting lead wire and contact

To crimp lead wires into contacts, strip off 4mm [0.16in.] of the insulation from the end of the lead wire, insert it into the contact, and crimp it. Be sure to avoid catching the insulation on the exposed wire crimping section.

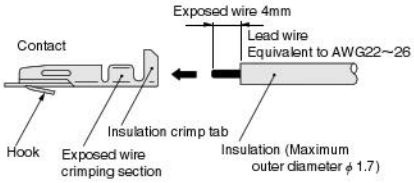

Cautions: 1. Do not pull hard on the lead wire.
2. Always use a dedicated tool for crimping of connecting lead wire and contact.
Contact: Model 702062-2M
Manufactured by Sumiko Tech, Inc.
Crimping tool: Model F1-702062
Manufactured by Sumiko Tech, Inc.

Attaching and removing contact and connector

Insert the contact with a lead wire into a plug connector □ hole until the contact hook latches on and is secured to the plug connector. Confirm that the lead wire cannot be easily pulled out.
To remove it, insert a tool with a fine tip (such as a small screwdriver) into the rectangular hole on the side of the plug connector to push up on the hook, and then pull out the lead wire.

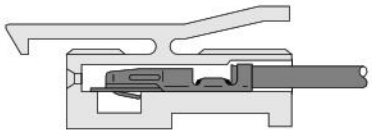

Cautions: 1. Do not pull hard on the lead wire. It could result in defective contacts, breaking wires, etc.
2. If the pin is bent, use a small screwdriver, etc. to gently straighten out the pin, and then complete the connection to the plug connector.

Common terminal pre-wired plug connector

1. Pre-wired common terminal at DC positive side or AC
Order code With straight connector: -CPSL
With L connector: -CPLL

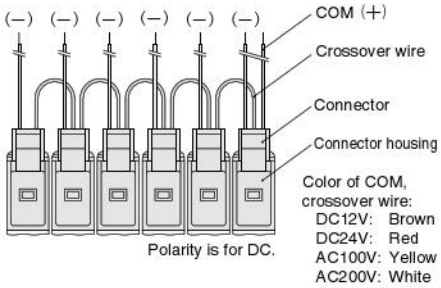

2. Pre-wired common terminal at DC negative side
Order code With straight connector: -CMSL
With L connector: -CMLL

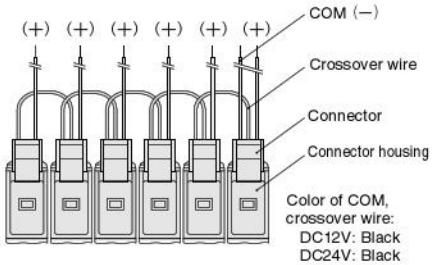

Cautions: 1. The diagrams show the straight connector configuration.
While the connector's orientation is different in the case of the L connector, in every case the first COM lead wire comes from the last station's mounted valve.
2. Since the COM terminal is connected to a crossover terminal inside the connector housing, the connector cannot be switched between a positive common and a negative common by changing the connectors.

Manual override

Non-locking type

To operate the manual override, press it all the way down. The valve works the same as when in the energized state as long as the manual override is pushed down, and returns to the normal position upon release.

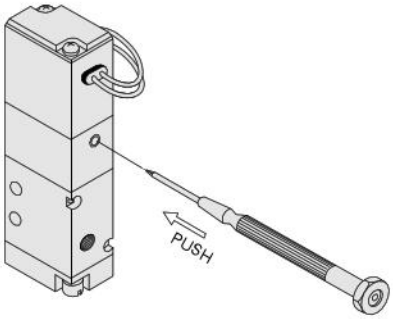

※Illustration shows the 110 series.

Locking protruding type

Use a small screwdriver to turn the adjusting knob several times in the clockwise direction, and lock the manual override in place. When locked, turning the adjusting knob several times in the counterclockwise direction releases a spring on the manual override, returns it to the normal position, and releases the lock.
For the locking protruding type, when the adjusting knob is not turned, this type acts just like the non-locking type; the valve enters the energized position as long as the manual override is pushed down, and returns to the normal position upon release.

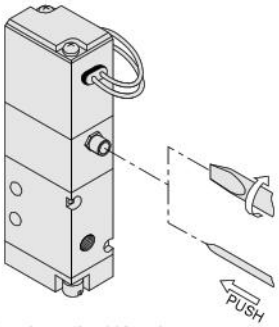

※Illustration shows the 110 series.

Cautions: **1.** The 112 and 118 series valves are pilot type solenoid valves. As a result, the manual override cannot switch the main valve without air supplied from the X(P2) port.
2. Always release the lock of the locking type and locking protruding type manual override before commencing normal operation.
3. Do not attempt to operate the manual override with a pin or other object having an extremely fine tip. It could damage the manual override button.
4. Do not turn the adjusting knob more than needed. It could result in defective operation.

External pilot

Piping

1. Since the 112 and 182 Series valves are external pilot type solenoid valves, always supply pilot air (pressure 0.2～0.7MPa [29～102psi.]) to the X(P2) port.
2. Because there is no restriction of flow direction on piping to the main port (1(P), 2(A), and 3(R) ports), a single valve can be used for multiple functions. The air path between the 1(P) and 2(A) ports is normally closed (NC), while the air path between the 2(A) and 3(R) ports is normally open (NO). For the actual piping, see the piping examples in the diagram below:

Valve functions and connection port locations

●For positive pressure 112E1 and 182E1

		De-energized	Energized
2-port	Normally closed (NC)	2(A) 3(R) (Plug) 1(P)	
	Normally open (NO)	2(A) 3(R) 1(P) (Plug)	
3-port	Normally closed (NC)	2(A) 3(R) 1(P)	
	Normally open (NO)	2(A) 3(R) 1(P)	
Selector valve		2(A) 3(R) 1(P)	
Divider valve		2(A) 3(R) 1(P)	

●For vacuum V112E1 and V182E1

		De-energized	Energized
2-port	Normally closed (NC)	2(A) (Vacuum pad, etc.) 3(R) (Plug) 1(P) (Vacuum pump, etc.)	
	Normally open (NO)	2(A) (Vacuum pad, etc.) 3(R) (Vacuum pump, etc.) 1(P) (Plug)	
3-port	Normally closed (NC)	2(A) (Vacuum pad, etc.) 3(R) 1(P) (Vacuum pump, etc.)	
	Normally open (NO)	2(A) (Vacuum pad, etc.) 3(R) (Vacuum pump, etc.) 1(P)	
Vacuum breaking	Normally closed (NC)	2(A) (Vacuum pad, etc.) 3(R) 1(P) (Vacuum pump, etc.)	
	Normally open (NO)	2(A) (Vacuum pad, etc.) 3(R) (Vacuum pump, etc.) 1(P)	

Cautions: **1.** The valve inner construction differs between the positive pressure (112 and 182E1) and vacuum (V112E1 and V182E1) types. While the vacuum valve is capable of combining low positive pressure and vacuum piping, positive pressure valves cannot be used under vacuum.
2. When positive pressure is applied to a vacuum valve for vacuum breaking, etc., the air pressure should be at 0.15MPa [22psi.] or less. For higher pressure applications, consult us.
3. Always supply 0.2～0.7MPa [29～102psi.] of pilot air to the X(P2) port. The valve will not activate without pilot air.

Mounting base 110-21,180-21

When installing a mounting base to the valve, always use the provided screws. The recommended tightening torque for the screws is 49N･cm {5kgf･cm} [4.3in･lbf].

Mounting valves on manifold

When mounting valves on manifold, apply the following recommended tightening torque for the valve mounting screws.
112 series: 39.2N･cm {4kgf･cm} [3.5in･lbf]
182 series: 49N･cm {5kgf･cm} [4.3in･lbf]