Compact High-Precision Actuators

Mini Guide Slider

Environmentally friendly RoHS compliant product!

High-precision mounting

Running parallelism 0.005mm [0.00020 in.] Note

Mounting parallelism 0.03mm [0.0012 in.] Note

Note: With some differences. See page 14 for details.

Compact design

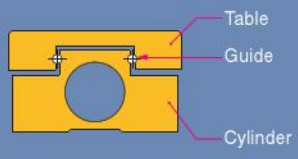

Table and guide integrated cylinder

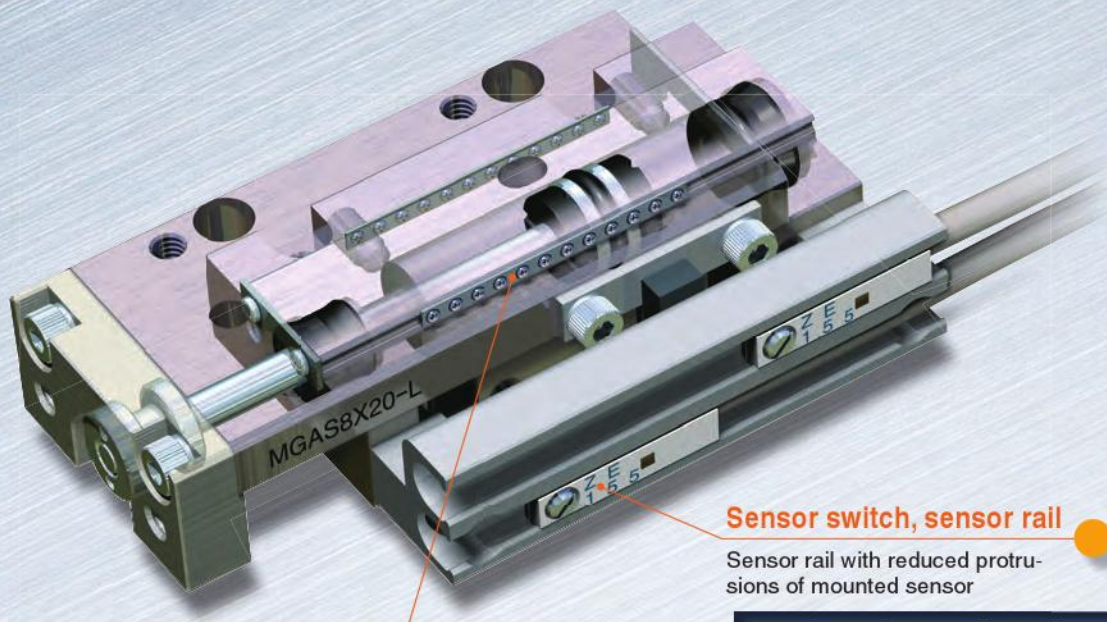

Sensor switch, sensor rail

Sensor rail with reduced protrusions of mounted sensor

Sensor switch and piping direction can be modified after purchase!

4-point contact type linear guide

- 4-point contact system stands up to variable loads and complex loads
- Finite track type with bearing cage
- Pre-load applied to reduce play

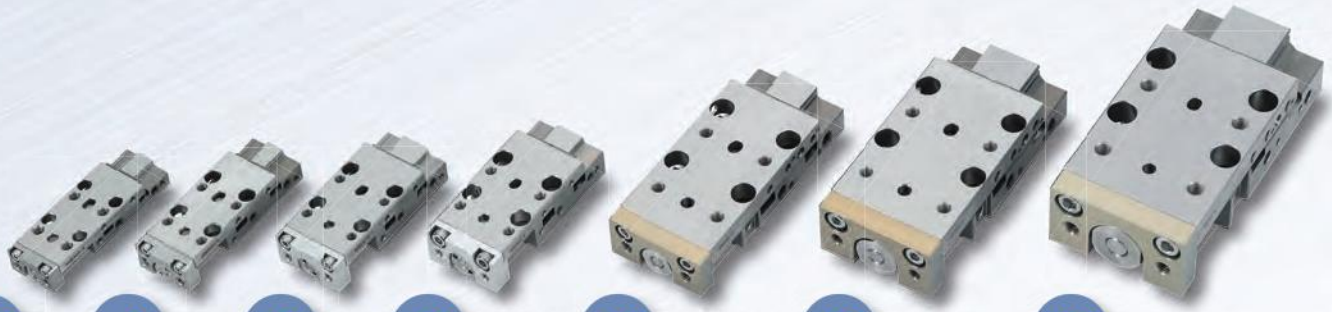

φ4.5 [0.177 in.] φ6 [0.236 in.] φ8 [0.315 in.] φ10 [0.394 in.] φ12 [0.472 in.] φ16 [0.630 in.] φ20 [0.787 in.]

Bore Size and Stroke (Figures in red indicate the newly added bore sizes.)

mm [in.]

Bore size	Standard strokes																
φ 4.5 [0.177]	5	10	—	—	—	—	—	—	—	—	—	—	—	—	—	—	—
φ 6 [0.236]	5	10	15	20	25	30	—	—	—	—	—	—	—	—	—	—	—
φ 8 [0.315]	5	10	15	20	25	30	—	—	—	—	—	—	—	—	—	—	—
φ 10 [0.394]	5	10	15	20	25	30	40	50	—	—	—	—	—	—	—	—	—
φ 12 [0.472]	—	10	15	20	—	30	40	50	60	70	80	—	—	—	—	—	—
φ 16 [0.630]	—	10	15	20	—	30	40	50	60	70	80	90	100	—	—	—	—
φ 20 [0.787]	—	10	15	20	—	30	40	50	60	70	80	90	100	120	125	—	—
NEW φ 25 [0.984]	—	10	—	20	—	30	40	50	60	—	80	—	100	—	—	130	150
NEW φ 32 [1.260]	—	10	—	20	—	30	40	50	60	—	80	—	100	—	—	130	150

(MGA12×20)

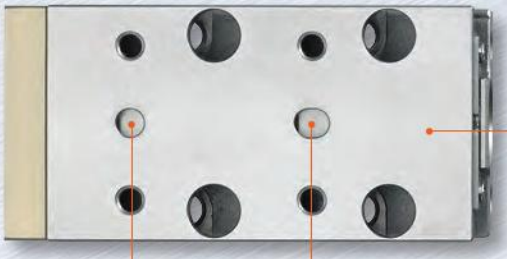

Plate
Aluminum alloy (special wear resistance treated), and stainless steel for φ25 [0.984] and φ32 [1.260]

Table
Stainless steel
(heat treated and grinding finished)

Locating dowel pin hole

Piping port
(Symmetrical construction allows for left and right position changes)

Body
Stainless steel
(heat treated and grinding finished)

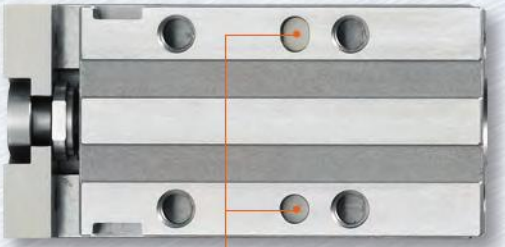

Locating dowel pin hole

Bottom face

Larger bore size requiring little space

New variation φ25 [0.984] · φ32 [1.260]

Dramatically improved thrust and rigidity! φ25 [0.984] and φ32 [1.260] bore sizes added, without sacrificing compactness and precision.

φ25 NEW [0.984 in.]

φ32 NEW [1.260 in.]

Piping for φ25 [0.984] and φ32 [1.260] products can also be connected on the sensor rail side.

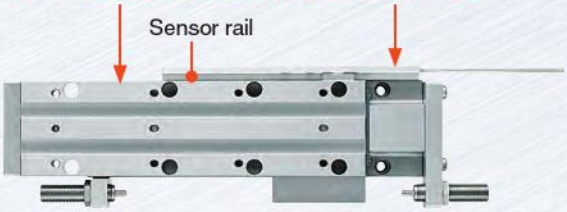

Photo shows φ32×150 stroke, with shock absorbers on both ends, and with sensors.
(MGAS32×150-R-SS2-ZE135A2)

For precise sensing of lengths
Stroke Sensors

Stopping positions of a pneumatic cylinder can be measured in 1/100 mm [0.00039 in.] units. Good/reject judgment of workpieces can be accomplished by using stroke sensors in combination with counters, and the history can be managed by importing the data into a PLC.

- **Actuator and precision measurement function is integrated in one unit.**
- **Compact and space-saving measurement sensor head**
- **Resolution: 0.0025 mm [0.0001 in.], accuracy: ±0.015 mm [0.00006 in.] (when measuring a 10-mm [0.3937 in.] strokes)**
- **Cylinder speed measurable with the dedicated counter**

Mini guide slider

Product range

- Standard cylinder
- Clean system cylinder
- Cylinder with buffer
- Stroke adjusting cylinder
- Cylinder with end keep
- Side-mounted cylinder
- Cylinder with shock absorbers

What is a stroke sensor?

A stroke sensor detects the scale tape sticked on the actuator table with the optical detection sensor employing A-/B-phase difference output and the quadruple function, and displays the result on the counter in 0.01 mm [0.00039 in.] units with four outputs. Humidity changes in the measurement environment can be automatically corrected by using the humidity compensation unit.

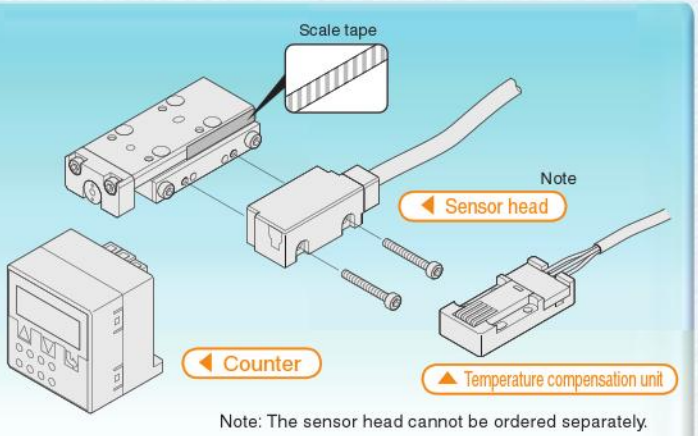

Note: The sensor head cannot be ordered separately.

Application Example

Sorting workpieces in a limited space

Measures dimensions of five workpieces simultaneously in a limited space and sorts rejecting workpieces.

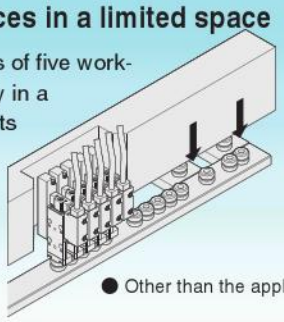

Measurement of workpieces that vary widely in size

Measures workpieces that vary widely in size (from 10 mm [0.394 in.] to 80 mm [3.150 in.] for example) and sorts rejecting workpieces.

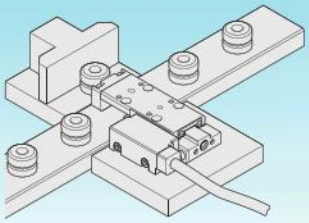

- Other than the application examples given above, they are suitable for applications in production lines that require precision measurement such as press fitting checks and parts inspection.

For details of stroke sensors, see Koganei's website.

Linearly sensing the cylinder positions in a specific range

Linear Magnetic Sensor Controller

- **Analog outputs (1 to 5 VDC) available as standard enable communications with controllers.**
- **Four switch outputs available. This enables simplified position detectioning.**

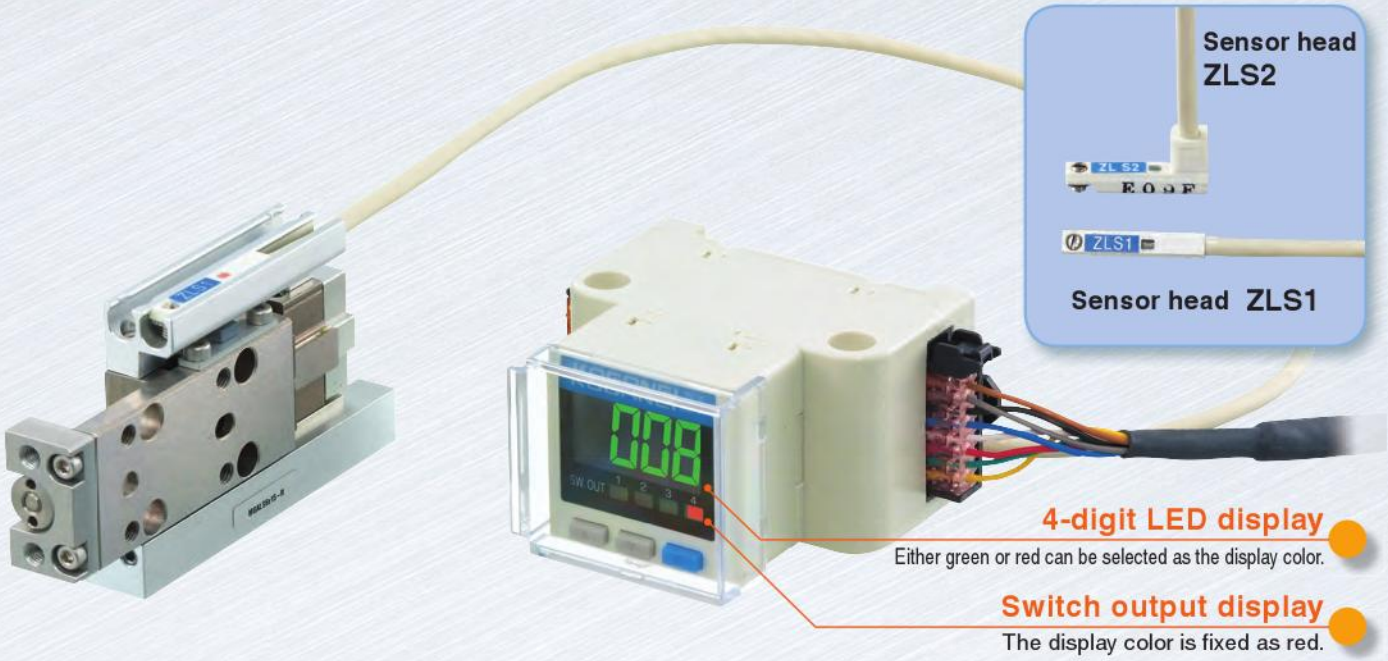

Output Modes

Window comparator mode

The ON range for each output can be set within the effective measurement range, i.e. the ON range of the sensor head.
The response differential is fixed. (2% F.S)
When the controller settings and sensor head installation position are set as follows:
Output 1 Threshold setting Upper limit: 60, Lower limit: 40
Display at press fit completion: 90

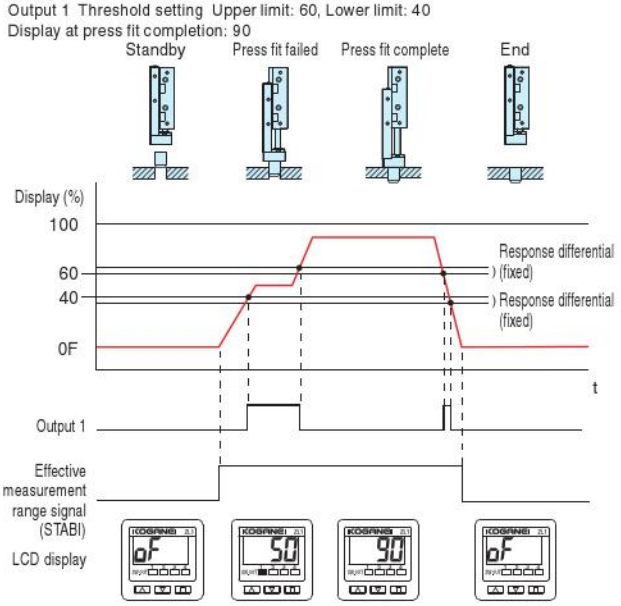

Hysteresis mode

The ON and OFF positions for each output can be set within the effective measurement range, i.e. the ON range of the sensor head.
When the controller settings and sensor head installation position are set as follows:
Output 1 Threshold setting Upper limit: 40, Lower limit: 20
Display at press fit completion: 90

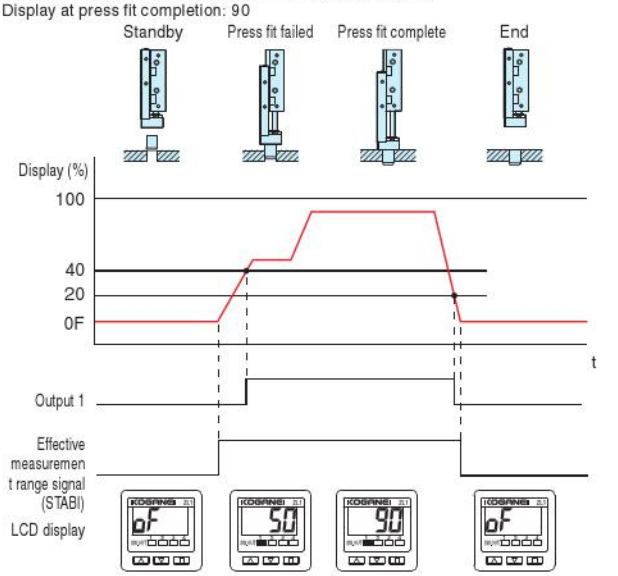

Note: The output is turned OFF when the effective measurement range signal is OFF, i.e. outside of the measurement range.

For details of linear magnetic sensor switches, see p.178.

Caution Before use, be sure to read the "Safety Precautions" on p.9.

Product range

- Nine bore sizes (ϕ4.5 [0.177], ϕ6 [0.236], ϕ8 [0.315], ϕ10 [0.394], ϕ12 [0.472], ϕ16 [0.630], ϕ20 [0.787], ϕ25 [0.984], ϕ32 [1.260])
- Total of 14 product ranges (For details, see p.7 and 8.)
- Left-right symmetry available for all types.

Numbers show the specifications pages.

Standard cylinder (MGA)

p. 18

Clean system cylinder (CS-MGA)

p. 144

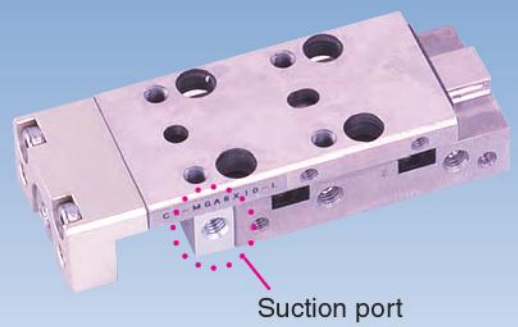

■ Clean system cylinders in bore sizes ϕ4.5 [0.177] to ϕ10 [0.394] are at Class 5 Note as 0.1 μm particle equivalent. (Bore sizes ϕ12 [0.472] to ϕ20 [0.787] are Class 6 Note.)

Note: For Koganei standards, see p.171.

Cylinder with buffer (MGAG)

p. 20

Extended-side stroke adjusting cylinder (MGAP)

p. 18 and 19

Cylinder with end keep(MGAK)

p. 20

Extended/retracted-side stroke adjusting cylinder(MGAE)

p. 18 and 19

■ Select from two types of stroke adjustment, depending on the application. The hardened metal stopper located at the center of the cylinder achieves highly accurate repeatability.

Side-mounted cylinder (MGAL)

p. 19

Table left side mounted (-L)

Table right side mounted (-R)

■ Side-mounted cylinder is suitable for short pitch mounting. Left-facing or right-facing table can be selected, depending on the application.

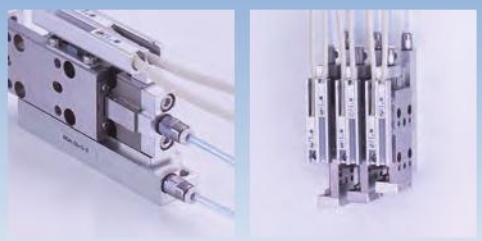

Collects wiring and piping in a single direction

Cylinder with shock absorber (With shock absorber, with metal stopper, and with rubber stopper)

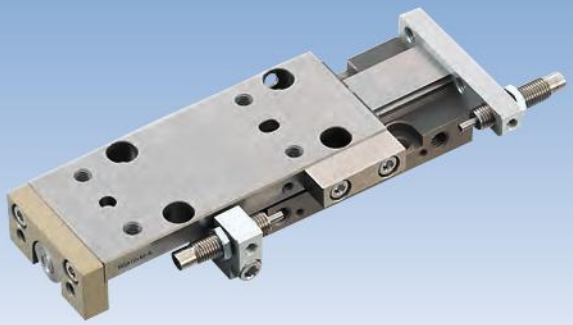

Available for bore sizes ϕ10 [0.394], ϕ12 [0.472], ϕ16 [0.630], and ϕ20 [0.787], ϕ25 [0.984], ϕ32 [1.260].

Note: No rubber stopper available for ϕ 10 [0.394].

Shock absorber

Metal stopper

Rubber stopper

Rear piping specification (MGAH)

p. 19

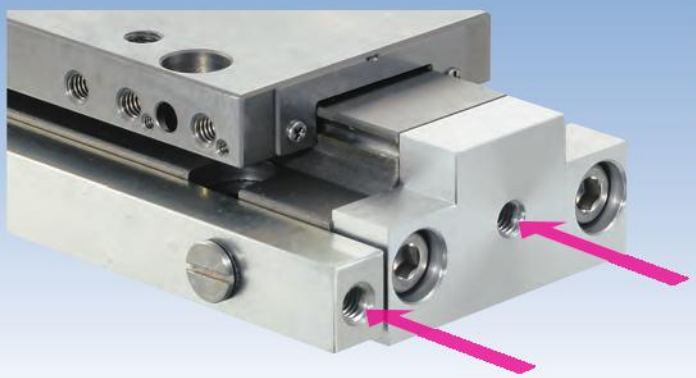

The dedicated body and piping block enables arrangement of piping in a single direction at the rear. Cleanroom specification is also available.

Applicable cylinder bores

ϕ4.5 [0.177], ϕ6 [0.236], ϕ8 [0.315], ϕ10 [0.394], ϕ12 [0.472], ϕ16 [0.630], ϕ20 [0.787]

■ Product Range and Bore Size Table

Numbers show the dimensions pages.

Product range	Basic model	Shock absorber	Bore size φ mm [in.]								
			4.5 [0.177]	6 [0.236]	8 [0.315]	10 [0.394]	12 [0.472]	16 [0.630]	20 [0.787]	25 [0.984]	32 [1.260]
● **Standard cylinder**	**MGA**	—	35	43	51	59	79	99	119	139	141
		With shock absorber	—	—	—	60	80	100	120	140	142
		With metal stopper	—	—	—	60	80	100	120	140	142
		With rubber stopper	—	—	—	—	80	100	120	140	142
● **Extended side stroke adjusting cylinder** 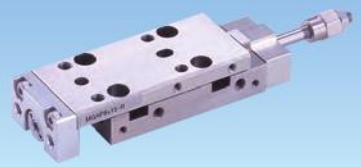	**MGAP**	—	36	44	52	61	81	101	121	—	—
		With shock absorber (Extended side only)	—	—	—	62	82	102	122	—	—
		With rubber stopper (Extended side only)	—	—	—	—	82	102	122	—	—
● **Extended/retracted-side stroke adjusting cylinder**	**MGAE**	—	36	44	52	63	83	103	123	—	—
		With shock absorber	—	—	—	64	84	104	124	—	—
		With rubber stopper	—	——	—	—	84	104	124	—	—
● **Side-mounted cylinder** Table left side mounted (-L) Table right side mounted (-R)	**MGAL**	—	37	45	53	65	—	—	—	—	—
● **Cylinder with buffer** ■Buffer mechanism absorbs position deviation and impact at downward end of stroke caused by inserting a workpiece.	**MGAG**	—	36	44	52	67	85	105	125	—	—
		With shock absorber (Retracted side only)	—	—	—	68	86	106	126	—	—
		With metal stopper (Retracted side only)	—	—	—	68	86	106	126	—	—
		With rubber stopper (Retracted side only)	—	—	—	—	86	106	126	—	—
● **Extended side stroke adjusting cylinder with buffer**	**MGAPG**	—	36	44	52	69	87	107	127	—	—
● **Extended/retracted-side stroke adjusting cylinder with buffer**	**MGAEG**	—	36	44	52	71	89	109	129	—	—
		With shock absorber (Retracted side only)	—	—	—	72	90	110	130	—	—
		With rubber stopper (Retracted side only)	—	—	—	—	90	110	130	—	—

Note: Only retracted side can be selected for cylinders with buffer.

Numbers show the dimensions pages.

Product range	Basic model	Shock absorber	Bore size φ mm [in.]								
			4.5 [0.177]	6 [0.236]	8 [0.315]	10 [0.394]	12 [0.472]	16 [0.630]	20 [0.787]	25 [0.984]	32 [1.260]
Side-mounted cylinder with buffer	**MGALG**	—	39	47	55	73	—	—	—	—	—
Cylinder with end keep	**MGAK**	—	—	—	—	—	91	111	131	—	—
		With shock absorber (Extended side only)	—	—	—	—	92	112	132	—	—
		With metal stopper (Extended side only)	—	—	—	—	92	112	132	—	—
		With rubber stopper (Extended side only)	—	—	—	—	92	112	132	—	—
Cylinder with buffer end keep	**MGAGK**	—	—	—	—	—	93	113	133	—	—
Standard cylinder, rear piping specification	**MGAH**	—	41	49	57	75	95	115	135	—	—
		With shock absorber (Extended side only)	—	—	—	76	96	116	136	—	—
		With metal stopper (Extended side only)	—	—	—	76	96	116	136	—	—
		With rubber stopper (Extended side only)	—	—	—	—	96	116	136	—	—
Cylinder with buffer, rear piping specification	**MGAGH**	—	42	50	58	77	97	117	137	—	—
Clean system cylinder ■Clean system cylinders in bore sizes φ4.5 [0.177] to φ10 [0.394] are at Class 5[note] as 0.1 μm particle equivalent. (Bore sizes φ12 [0.472] to φ20 [0.787] are Class 6[note].)	**CS-MGA**	—	149	151	153	155	159	163	167	—	—
		With shock absorber	—	—	—	156	160	164	168	—	—
		With rubber stopper	—	—	—	—	160	164	168	—	—
Clean system cylinder, rear piping specification	**CS-MGAH**	—	150	152	154	157	161	165	169	—	—
		With shock absorber (Extended side only)	—	—	—	158	162	166	170	—	—
		With rubber stopper (Extended side only)	—	—	—	—	162	166	170	—	—

Note: For Koganei standards, see p.171.

Safety Precautions (Mini Guide Sliders)

Always read these precautions carefully before use.

Before selecting and using the products, please read all the Safety Precautions carefully to ensure proper product use.
The Safety Precautions shown below are to help you use the product safely and correctly, and to prevent injury or damage to you, other people, and assets beforehand.
Follow the Safety Precautions for: ISO4414 (Pneumatic fluid power-General rules and safety requirements for systems and their components), JIS B 8370 (Pneumatic fluid Power-General rules relating to systems regulations)

The directions are ranked according to degree of potential danger or damage:
"DANGER!", "WARNING!", "CAUTION!", and "ATTENTION!"

⚠ **DANGER**	Expresses situations that can be clearly predicted as dangerous. If the noted danger is not avoided, it could result in death or serious injury. It could also result in damage or destruction of assets.
⚠ **WARNING**	Expresses situations that, while not immediately dangerous, could become dangerous. If the noted danger is not avoided, it could result in death or serious injury. It could also result in damage or destruction of assets.
⚠ **CAUTION**	Expresses situations that, while not immediately dangerous, could become dangerous. If the noted danger is not avoided, it could result in light or semi-serious injury. It could also result in damage or destruction of assets.
⚠ **ATTENTION**	While there is little chance of injury, this content refers to points that should be observed for appropriate use of the product.

■ This product was designed and manufactured as parts for use in General Industrial Machinery.

- ■ In the selection and handling of the equipment, the system designer or other person with fully adequate knowledge and experience should always read the Safety Precautions, Catalog, Instruction Manual and other literature before commencing operation. Making mistakes in handling is dangerous.
- ■ After reading the Instruction Manual, Catalog, etc., always place them where they can be easily available for reference to users of this product.
- ■ If transferring or lending the product to another person, always attach the Instruction Manual, Catalog, etc., to the product where they are easily visible, to ensure that the new user can use the product safely and properly.
- ■ The danger, warning, and caution items listed under these "Safety Precautions" do not cover all possible cases. Read the Catalog and Instruction Manual carefully, and always keep safety first.

⚠ DANGER

- ● Do not use the product for the purposes listed below:
  1. Medical equipment related to maintenance or management of human lives or bodies.
  2. Mechanical devices or equipment designed for the purpose of moving or transporting people.
  3. Critical safety components in mechanical devices.

  This product has not been planned or designed for purposes that require advanced stages of safety. It could cause injury to human life.
- ● Do not use the product in locations with or near dangerous substances such as flammable or ignitable substances. This product is not explosion-proof. It could ignite or burst into flames.
- ● When mounting the product and workpieces, always firmly support and secure them in place. Dropping or falling the product or improper operation could result in injury.
- ● Persons who use a pacemaker, etc., should keep a distance of at least 1 meter [3.28 ft.] away from the product. There is a possibility that the pacemaker will malfunction due to the strong magnet built into the product.
- ● Never attempt to modify the product. It could result in abnormal operation leading to injury, electric shock, fire, etc.
- ● Never attempt inappropriate disassembly, assembly or repair of the product relating to basic inner construction, or to its performance or to functions. It could result in injury, electric shock, fire, etc.
- ● Do not splash water on the product. Spraying it with water, washing it, or using it underwater could result in abnormal operations of the product leading to injury, electric shock, fire, etc.
- ● While the product is in operation, avoid touching it with your hands or otherwise approaching too close. In addition, do not make any adjustments to the interior or to the attached mechanisms (shock absorbers, stroke adjusting mechanism, sensor switch mounting location, disconnection of piping tubes or plugs, etc.).
  The cylinder can move suddenly, possibly resulting in injury.
- ● When operating the product, always install speed controllers, and gradually loosen the needle valve from a choked state to adjust the speed increasing. Failure to make this adjustment could result in sudden movements, putting lives at risk.

⚠ WARNING

- ● Do not use the product in excess of its specification range. Such use could result in product breakdowns, function stop, damage, or drastically reduce the operating life.
- ● Before supplying air or electricity to the device and before starting operation, always conduct a safety check of the area of machine operation. Unintentional supply of air or electricity could possibly result in electric shock, or in injury caused by contact with moving parts.
- ● Do not touch the terminals and the miscellaneous switches, etc., while the device is powered on. There is a possibility of electric shock and abnormal operation.
- ● Do not throw the product into fire. The product could explode and/or release toxic gases.
- ● Do not sit on the product, place your foot on it, or place other objects on it. Accidents such as falling and tripping over could result in injury. Dropping the product may result in injury, or also damage or break the product resulting in abnormal or erratic operation, or runaway, etc.
- ● When conducting any kind of operation for the product, such as maintenance, inspection, repair, or replacement, always turn off the air supply completely and confirm that residual pressure inside the product or in piping connected to the product is zero before proceeding. In particular, be aware that residual air will still be in the air compressor or air storage tank. The cylinder could abruptly move if residual air pressure remains inside the piping, causing injury.
- ● Do not use the cylinder for equipment whose purpose is absorbing the shocks and vibrations of mechanical devices. It could break and possibly result in injury or in damage to mechanical devices.
- ● Avoid scratching the cords for the sensor switch lead wires, etc.
  Letting the cords be subject to scratching, excessive bending, pulling, rolling up, or being placed under heavy objects or squeezed between two objects, may result in current leaks or defective continuity that lead to fire, electric shock, or abnormal operation.
- ● Do not subject sensor switches to an external magnetic field during cylinder operation. Unintended movements could result in damage to the equipment or in personal injury.
- ● Use the product within the recommended load and operating frequency specifications. Attempting to use it beyond the recommended load and operating frequency specifications could damage the table, etc., which could result in damage to the equipment or personal injury. It could also drastically reduce the product's operating life.

- Avoid a control system that will cause the table or a workpiece to drop when the system is abnormal due to an emergency stop, electrical power failure, etc. This could result in damage to the equipment or in personal injury. Always take control measures such as designing a safety circuit or device to prevent the table or workpieces, etc., from dropping in such cases mentioned above.
- Install relief valves, etc., to ensure that the cylinder does not exceed its rated pressure when such pressure is rising due to external forces on the cylinder. Excessive pressure could lead to a breakdown and damage.
- In initial operations after the equipment has been idle for 48 hours or more, or has been in storage, there is a possibility that contacting parts may have stuck together, resulting in equipment operation delays or sudden movements. For these initial operations, always run a test operation before use to check that operating performance is normal.

⚠ CAUTION

- Do not use in locations that are subject to direct sunlight (ultraviolet rays), dust, salt, iron powder, high humidity, or in the media and/or the ambient atmospheres that include organic solvents, phosphate ester type hydraulic oil, sulphur dioxide, chlorine gas, acids, etc. It could lead to early shutdown of some functions or a sudden degradation of performance, and result in a reduced operating life. For the materials, see the Major Parts and Materials.
- When installing the product, leave room for adequate working space around it. Failure to ensure adequate working space will make it more difficult to conduct daily inspections or maintenance, which could eventually lead to system shutdown or damage to the product.
- Do not bring magnetic media, etc., within 1 meter [3.28 ft.] of the product. There is the possibility that the data on the magnetic media will be destroyed due to the magnetism of the magnet.
- Do not use the sensor switch in locations subject to large electrical currents or strong magnetic fields. It could result in erratic operation. In addition, do not use magnetized materials in the mounting bracket. The magnetism could leak, possibly resulting in erratic operation.
- Do not place the product too close to magnets. Placing it near magnets or in locations subject to large magnetic field will cause erratic operation of sensor switches due to magnetization of the main body and table, or cause failure by adherence of iron powder, etc.
- Never use other companies' sensor switches with these products. It could possibly cause erratic operation or runaway.
- Do not scratch, dent, or deform the actuator by sitting on the product, using it as a scaffold, or placing objects on top of it. It could lead to damaged or broken products that result in operation shutdown or degraded performance.
- Always post an "operations in progress" sign for installations, adjustments, or other operations, to avoid unintentional supplying of air or electrical power, etc. Such accidental supplies may cause electric shock, or sudden activation of the actuator that could result in physical injury.
- Do not pull on the cords of the lead wires, etc., of the sensor switches mounted on the actuators, grab them when lifting or carrying, or place heavy objects or excessive loads on them. Such action could result in current leaks or defective continuity that lead to fire, electric shock, or abnormal operation.
- When dry air with a dew-point temperature lower than minus 20 degrees [-4°F] is used, the quality of the lubricant used may deteriorate. This can cause reduced performance or shutdown of functions.

⚠ ATTENTION

- When considering the possibility of using this product in situations or environments not specifically noted in the Catalog or Instruction Manual, or in applications where safety is an important requirement such as in an aircraft facility, combustion equipment, leisure equipment, safety equipment and other places where human life or assets may be greatly affected, take adequate safety precautions such as the application with enough margins for ratings and performance or fail-safe measure. Be sure to consult us with such applications.
- Always check the Catalog and other reference materials for product wiring and piping.
- Use a protective cover, etc., to ensure that human bodies do not come into direct contact with the operating portion of mechanical devices, etc.
- Do not control in a way that would cause a workpiece to fall during power failure. Take control measures so that they prevent the table or workpieces, etc., from falling during a power failure or emergency stop of the mechanical devices.
- When handling the product, wear protective gloves, safety glasses, safety boots, etc., to keep safety.
- When the product can no longer be used, or is no longer necessary, dispose of it appropriately as industrial waste.
- Pneumatic equipment can exhibit degraded performance and function over its operating life. Always conduct daily inspections of the pneumatic equipment, and confirm that all requisite system functions are satisfied, to prevent accidents from happening.
- For inquiries about the product, consult your nearest Koganei sales office or Koganei overseas department. The address and telephone number is shown on the back cover of this catalog.

⚠ OTHERS

- Always observe the following items.
  1. When using this product in pneumatic systems, always use genuine KOGANEI parts or compatible parts (recommended parts). When conducting maintenance and repairs, always use genuine KOGANEI parts or compatible parts (recommended parts). Always observe the required methods and procedure.
  2. Do not attempt inappropriate disassembly or assembly of the product relating to basic configurations, or its performance or functions.

Koganei cannot be responsible if these items are not properly observed.

Safety Precautions (Sensor Switches)

Always read these precautions carefully before use.

Design and selection

⚠ Warning

1. Check the specifications.
As use of this product over the specified ranges of voltage, current, temperature, shocks, etc., could result in a breakdown or abnormal operation, always read the specifications carefully to ensure correct use.

2. Avoid mounting cylinders in close proximity.
Mounting two or more cylinders with sensor switches in close proximity could result in erratic operation of the sensor switches, due to magnetic field interference with the system.

3. Caution about sensor switch ON time for positioning detection at intermediate stroke position.
Take caution that if the sensor switch is mounted at an intermediate position of the cylinder stroke for detection of the piston travel, the sensor switch actuation time may be too short when the cylinder speed is very rapid, so that the load (programmable controller, etc.) may fail to activate.
Maximum cylinder speed for positioning detection

$$V\ (\text{mm/s})\ [\text{in./sec.}] = \frac{\text{Sensor switch operating range (mm) [in.]}}{\text{Time required for activating load (ms)}} \times 1000$$

4. Keep wiring as short as possible.
The solid state sensor switch lead wire length should be within 30 m [98 ft.] as stipulated in the EN standards. For the reed sensor switch, if the lead wire is too long (10 m [33 ft.] or longer), capacitive surges will shorten the operating life of the sensor switch. If long wiring is needed, install the protection circuit mentioned in the Catalog. If the load is inductive or capacitive, also install the protection circuit mentioned in the Catalog.

5. Avoid repeated or excessive bending or pulling of lead wires.
Applying repeated bending stress or tension force on the lead wire could result in wire breakage.

6. Check for leakage current.
2-lead wire solid state sensor switches produce leakage current to activate their internal circuits, and the current passes through a load even when in

the turned-off condition. Ensure they satisfy the following inequality.

Input off current of programmable controller > Leakage current

If the above inequality cannot be satisfied, select a 3-lead wire solid state sensor switch, instead. Also note that parallel connection of a total of *n* sensor switches will multiply the amount of leakage current by *n* times.

⚠ Caution

1. Check for sensor switch internal voltage drop.
Series connection of reed sensor switches with indicator lamps or 2-lead wire solid state sensor switches causes increasing internal voltage drop, and the load may fail to activate. A total of *n* sensor switches will lead to *n* times the internal voltage drop. Ensure that the system satisfies the following inequality.

Supply voltage – Internal voltage drop × *n* > Minimum operating voltage for load

In relays with rated voltage of less than DC24V, check to see whether the above inequality is satisfied, even in the case of *n* = 1. If the above inequality cannot be satisfied, select a reed sensor switch without indicator lamp.

2. Do not use our sensor switches with other companies' cylinders.
The sensor switches are designed for use with Koganei cylinders only and may not function properly when used with other companies' cylinders.

Installation and adjustment

⚠ Warning

1. Do not apply an external magnetic field to the sensor switch while the cylinder is in operation.
An unintended movement could result in damage to the equipment or in personal injury.

⚠ Caution

1. Ensure a safe installation environment for the cylinders with sensor switches.
Do not use sensor switches in places where large current or magnetic fields are present. This could lead to unintentional operation. Do not use magnetic material for the mounting brackets. It could result in erratic operation.

2. Install sensor switches in the center of their operating range.
Adjust the mounting position of a sensor switch so that the piston stops in the center of its operating range (the range while the sensor turns ON). Operations will be unstable if mounted at the end of the operating range (at the boundary near ON or OFF). Also be aware that the operating range will vary with changes in temperature.

3. Follow the tightening torque of sensor switches when mounting.
Over-tightening beyond the allowed tightening torque may damage the mounting threads, mounting brackets, sensor switches, etc. In addition, insufficient tightening torque could cause the sensor switch position to be changed, resulting in operation instability. For the tightening torque, follow the instructions on p.170.

4. Do not carry the cylinder grabbing its sensor switch lead wires.
After mounting a sensor switch to a cylinder, do not grab and lift the lead wires to carry the cylinder. Never do this, as it could result in lead wire disconnections, and could also apply stress to the interior of the sensor switch, resulting in breakage of internal elements.

5. Do not drop sensor switches, or bump them against others.
During handling of sensor switches, do not apply excessive shocks (294.2 m/s^2 [30 G] or larger) such as hitting, dropping, or bumping.
In reed sensor switches, the contact reed may be activated unintentionally, causing it to send or break sudden signals. It may also cause changes in the contact distance that lead to changes in sensor switch sensitivity and result in erratic operation. Even if the sensor switch case is undamaged, the inner parts of the sensor switch may suffer breakdown and cause erratic operation.

Wiring

⚠ Danger

1. Avoid letting moving objects near sensor switches come into contact with them.
When the cylinders with sensor switches are moving, or when moving objects are nearby, do not let them come into contact each other. In particular, lead wires could become worn out or damaged, causing operating instability in the sensor switch. In the worst case, it could result in current leaks or electric shock.

2. Always turn off the power supply for wiring work.
Conducting wiring work while the power is on could result in electric shock. Also, incorrect wiring could damage sensor switches in an instant. Turn on the power only after the wiring work is completed.

⚠ Warning

1. Check the Catalog, etc., to ensure that the sensor switch wiring is correctly connected.
Miswiring could result in abnormal operation.

2. Do not share the same wiring with power or high voltage lines.
Avoid wiring in parallel to or shared in the same conduit with power or high voltage lines. The sensor switch or control circuit may suffer electric noise that results in erratic operation.

3. Avoid repeated or excessive bending or pulling of lead wires.
Applying repeated bending stress or tension force on the lead wire could result in wire breakage.

4. Check polarity in the wiring.
In polarity (+, −, output) specified sensor switches, make sure that wiring connections are correct. The wrong polarity could result in damage to sensor switches.

⚠ Caution

1. Avoid short circuiting the loads.
Turning a sensor switch on while the load is short-circuited causes overcurrent, which will damage the sensor switch in an instant.
Example of short-circuited load: Sensor switch's output lead wire is directly connected to the power supply.

Warranty and General Disclaimer

1. Warranty Period
KOGANEI warrants this product for a period of no more than 180 days after it is shipped.

2. Scope of Warranty, and General Disclaimer

(1) The KOGANEI product warranty covers individual products. When a product purchased from KOGANEI or from an authorized KOGANEI dealer or KOGANEI distributor malfunctions during the warranty period in a way that is found to be attributable to KOGANEI responsibility, KOGANEI will repair or replace the product free of charge.
Even if a product is still within the warranty period, its durability is determined by its operation cycles and other factors. Contact your nearest KOGANEI sales office or the KOGANEI overseas department for details.

(2) Koganei shall not be held responsible for any loss induced by failure of a Koganei product or its diminished function or performance, or for any loss involving other equipment induced in this manner.

(3) KOGANEI shall not be held responsible for any losses due to use or storage of the product in a way that is outside of the product specifications prescribed in KOGANEI catalogs and the instruction manual, and/or due to actions that violate the mounting, installation, adjustment, maintenance and other safety precautions.

(4) KOGANEI shall not be held responsible for any losses caused by breakdown of the product due to factors outside the responsibility of KOGANEI, including but limited to fire, natural disaster, the actions of third parties, and international actions or errors by you.

(Linear Magnetic Sensor Controller)

⚠ Danger

- Do not use the linear magnetic sensor controller or sensor head in locations where dangerous substances such as flammable or ignitable substances are present or nearby. These sensor controllers and sensor heads are not explosion-proof. They could ignite or burst into flames.
- Do not make any adjustments to the attached mechanisms (connection/disconnection of wiring connectors, mounting or positioning of the sensor head, etc.) while the product is in operation. This could result in abnormal operation leading to injury.

⚠ Warning

- Avoid damaging the cords of the sensor head lead wires, etc.
  Allowing the cords to be damaged, bent excessively, pulled, rolled up, placed under heavy objects or squeezed between two objects, may result in current leaks or defective continuity that will lead to fire, electric shock, or abnormal operation.
- Do not apply an external magnetic field to the controller and sensor head while the linear magnetic sensor controller is in operation. Unintended movements could result in damage to the equipment or in personal injury.
- Avoid wiring parallel to or in the same conduit as power or high-voltage lines. The linear magnetic sensor controller may be affected by electric noise that results in erratic operation.
- Make sure that the polarity of wiring connections is correct.
  The wrong polarity could result in damage to the linear magnetic sensor controller and sensor head.
- When installing two or more cylinders equipped with the sensor heads of linear magnetic sensor controllers in parallel, secure a clearance of at least 40 mm between cylinder body surfaces. Otherwise erratic operation could result.

⚠ Caution

- Do not use the linear magnetic sensor controller or sensor head in locations subject to large electrical currents or strong magnetic fields. This could result in erratic operation.
- Do not pull on the cords of the lead wires, etc., of the linear magnetic sensor controller and sensor head, grab them when lifting or carrying the equipment, or place heavy objects or excessive loads on them. Such actions could result in current leaks or defective continuity that leads to fire, electric shock, or abnormal operation.
- Be sure to use the specified sensor heads for each product.
  Use of sensor heads other than those specified could lead to erratic operation of, or damage to, the product.
- When handling linear magnetic sensor controllers and sensor heads, do not apply excessive shocks (294.2 m/s^2 [30 G] or larger) by striking, dropping, or bumping against them. Even if their casing is undamaged, their inner parts may suffer breakdown, causing erratic operation.
- Avoid short circuiting the loads.
  Turning the switch output on while the load is short-circuited causes overcurrent, which will damage the linear magnetic sensor controller.
  Example of short-circuited load: The lead wire of a switch output is directly connected to the power supply.
- Tighten screws with a tightening torque of 0.2 N·m [1.8 in·lbf] when mounting the sensor head.
  Over-tightening beyond the allowed tightening torque may damage the sensor head.
  Be sure to connect the sensor head and controller while the power is turned off. Connecting the sensor head while the power is supplied may cause erratic operation of the controller because of surge voltage, etc.

Handling Instructions and Precautions(Mini guide slider)

General precautions

Allowable kinetic energy

To carry an inertial load, operate the Mini Guide Slider with the kinetic energy below the allowable value. For details about the relation between the load and table speed, see "Allowable load mass" on p.15.

Piping

In piping connection with the Mini Guide Sliders, flush the tube completely (by blowing compressed air) before piping.
Intrusion of machining chips, sealing tape, rust, etc., generated during plumbing could result in air leaks and other defective operations.

Media

1. Use air for the media. For the use of any other media, consult us.
2. Air used for the Mini Guide Sliders should be clean air that contains no deteriorated compressor oil, etc. Install an air filter (filtration of a minimum 40 μm) near the Mini Guide Slider or valve to remove collected liquid or dust. In addition, drain the air filter periodically. Collected liquid or dust entering the Mini Guide Slider may cause improper operation.

Lubrication

1. Do not lubricate the clean system cylinders (cleanroom specification). Lubrication causes malfunctions.
2. The standard cylinder can be used without lubrication, if lubrication is required, use Turbine Oil Class 1 (ISO VG32) or equivalent. Avoid using spindle oil or machine oil.
3. Apply CGL grease (Nippon Thompson Co., Ltd. made) on the raceway surface of the track rail in the guide portion every six months or 3 million operations.

Atmosphere

1. When using in locations subject to dripping water, dripping oil, etc., or to large amounts of dust, use something to cover and protect the unit.
2. Do not use the Mini Guide Sliders in a corrosive atmosphere. Use in such surroundings causes damage or malfunctions.
3. The main body and table are made of stainless steel. However, they may rust depending on the operating environment. Apply rust preventing oil to them periodically. Note that touching the body of the product with a bare hand may cause rusting because of salt content in sweat. It is advisable to wear gloves.
4. Do not use the products under extremely dry conditions.
5. The ambient temperature range most suitable for use of the Mini Guide Slider is from 5 to 60°C [41 to 140°F]. Use at temperatures exceeding 60°C [140°F] causes damage or malfunctions. When the temperature is 5°C [41°F] or below, moisture in the air is frozen to cause damage and malfunctions. Take some anti-freezing measures.

During Operation

1. Do not place hands in the operating direction of the Mini Guide Sliders.
2. At initial operation, pay sufficient attention to the operating direction of the slider.
3. Care should be taken not to be trapped your body or fingers between the slider and the plate when the slider table is retracting.
4. For maintenance, check that there is no residual pressure in the slider.
5. The slider speed should be 500 mm/s [20 in./sec.] or less (300 mm/s [12 in./sec.] or less for the clean system cylinders (cleanroom specification)). Even within the allowable range, if the speed and load are large, install external stoppers to avoid applying direct shocks to the slider.
6. When using a slider with an external stopper so reciprocal operation is normally performed for only part of the stroke with occasional full-stroke operation, full-stroke operation may not be possible even if the external stopper is removed. This is because repeated use within a limited range causes the steel balls and cage to go out of normal position. To avoid this, full-stroke operation is recommended on a periodic or operation count basis.
7. The mini guide slider is made of martensitic stainless steel, so it will become magnetized if it comes into contact with a magnet or magnetic object. Note that magnetization may cause incorrect sensor switch operation.

Installation and adjustment

Mounting

1. While any mounting direction is allowed (excluding with-buffer type), the flatness of the mounting surface of the workpiece or base should be 0.02 mm [0.0008 in.] or less. Improper flatness causes looseness in the guide portion, increases the rolling resistance, and adversely affects the product operating life.
2. Care should be taken that scratches or dents on the slider's mounting surface may damage its flatness.
3. In applications subject to large shocks, reinforce the mounting by using screws to install an additional support to the cylinder body, etc.
4. The table is supported with steel balls. Do not apply any strong shock or excessively large moment to the table when mounting the workpiece with screws. Hold the table when securing the workpiece to the table. Tightening screws with holding the cylinder gives excessively large moment to the guide, leading to deterioration of accuracy.
5. Ensure adequate strength of the mounting screws for the cylinder and the end plate. When mounting the cylinder, tighten the screws with torque within the allowable range.
6. Take measures against looseness of the screws when shocks or vibrations might loosen the screws.
7. Do not leave scratches or dents in the areas where the piston rod and the guide rod contact. It could result in damage to the seal or in air leaks.
8. Use clearance fit locating pins (optional stepped pins) for locating dowel pin holes. When a press-fit pin is used, excessive loads generated while pressing will cause a failure in the guide. Furthermore, the pin holes of the table are through holes, using pins other than the stepped pins will bump against the main body, causing a failure.

Caution: When mounting the Mini Guide Slider, avoid interference between the piping/fittings and the mounting surface because of its thinner construction.

● Mounting workpieces

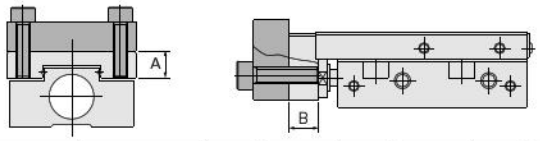

Model	Mounting screw	Max. tightening torque N·m [in·lbf]	Max. threaded depth A mm [in.]	Max. threaded depth B mm [in.]
MGA□4.5	M3×0.5	0.63 [5.58]	4 [0.157]	4.5 [0.177]
MGA□6	M3×0.5	0.63 [5.58]	4 [0.157]	5.5 [0.217]
MGA□8	M3×0.5	0.63 [5.58]	5 [0.197]	5.5 [0.217]
MGA□10	M3×0.5	0.63 [5.58]	5 [0.197]	7 [0.276]
MGA□12	M4×0.7	1.5 [13.3]	7 [0.276]	7 [0.276]
MGA□16	M4×0.7	1.5 [13.3]	8.5 [0.335]	8 [0.315]
MGA□20	M5×0.8	3 [26.6]	10 [0.394]	9 [0.354]
MGA□25	M6×1	9.2 [81.4]	12 [0.472]	10 [0.394]
MGA□32	M6×1	9.2 [81.4]	12 [0.472]	12 [0.472]

Caution: The length of the workpiece mounting screws should be below the maximum thread depth. Long screws will bump against the cylinder body, causing damage to the cylinder.

● Mounting cylinders (side-mounted specification)

Caution: Do not use washers, etc. The mounting screw could interfere with the guide and damage it.

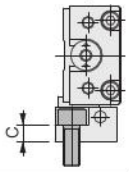

Model	Mounting screw	Max. tightening torque N·m [in·lbf]	C mm [in.]
MGA□4.5	M3×0.5	1.14 [10.09]	5 [0.197]
MGA□6	M3×0.5	1.14 [10.09]	5 [0.197]
MGA□8	M4×0.7	2.7 [23.9]	4 [0.157]
MGA□10	M4×0.7	2.7 [23.9]	4 [0.157]

● Mounting cylinders

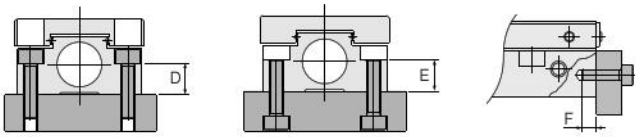

Model	Mounting screw	Max. tightening torque N·m [in·lbf]	D mm [in.]
MGA□4.5	M2×0.4	0.32 [2.83]	3.5 [0.138]
MGA□6	M2.5×0.45	0.65 [5.75]	5 [0.197]
MGA□8	M2.5×0.45	0.65 [5.75]	5.5 [0.217]
MGA□10	M3×0.5	1.14 [10.09]	7 [0.276]
MGA□12	M4×0.7	2.7 [23.9]	6 [0.236]
MGA□16	M4×0.7	2.7 [23.9]	9 [0.354]
MGA□20	M5×0.8	5.4 [47.8]	12 [0.472]
MGA□25	M5×0.8	5.4 [47.8]	14 [0.551]
MGA□32	M6×1	9.2 [81.4]	18 [0.709]

Model	Mounting screw	Max. tightening torque N·m [in·lbf]	E mm [in.]
MGA□4.5	M2.5×0.45	0.65 [5.75]	3.5 [0.138]
MGA□6	M3×0.5	1.14 [10.09]	5 [0.197]
MGA□8	M3×0.5	1.14 [10.09]	5.5 [0.217]
MGA□10	M4×0.7	2.7 [23.9]	7 [0.276]
MGA□12	M5×0.8	5.4 [47.8]	6 [0.236]
MGA□16	M5×0.8	5.4 [47.8]	9 [0.354]
MGA□20	M6×1	9.2 [81.4]	12 [0.472]
MGA□25	M6×1	9.2 [81.4]	14 [0.551]
MGA□32	M8×1.25	22 [195.0]	16 [0.630]

Model	Mounting screw	Max. tightening torque N·m [in·lbf]	Max. threaded depth F mm [in.]
MGA□4.5	M2×0.4	0.32 [2.83]	2.5 [0.098]
MGA□6	M2.5×0.45	0.65 [5.75]	2.5 [0.098]
MGA□8	M3×0.5	1.14 [10.09]	3 [0.118]
MGA□10	M3×0.5	1.14 [10.09]	3 [0.118]
MGA□12	M4×0.7	2.7 [23.9]	4 [0.157]
MGA□16	M5×0.8	5.4 [47.8]	4 [0.157]
MGA□20	M5×0.8	5.4 [47.8]	5 [0.197]
MGA□25	M6×1	9.2 [81.4]	8 [0.315]
MGA□32	M6×1	9.2 [81.4]	8 [0.315]

Minimum mounting pitch for side-mounted specification (Without sensor)

When using a short pitch mounting for the Mini Guide Slider's side-mounted specification, use the mounting pitches shown in the table below, or larger.

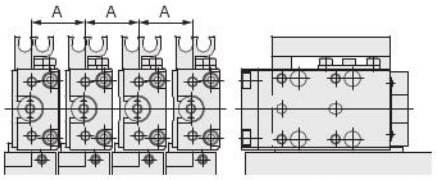

Minimum mounting pitch

Model	A mm [in.]
MGA□4.5	12 [0.472]
MGA□6	14 [0.551]
MGA□8	16 [0.630]
MGA□10	18 [0.709]

※ Assumes that the mounting surface is flat.

Note See p.176 for the products equipped with solid state type and reed switch type sensor switches. See p.179 for the products equipped with linear magnetic sensors.

Cylinder with Buffer

Operating conditions

1. When using a cylinder with buffer, use in the direction the buffer mechanism facing either vertically downward or horizontally. Note that the load or speed may sometimes cause the buffer to operate at the end of the stroke. In this case, adjust the load and/or speed.
2. Do not operate the buffer mechanism on the retracted side.

Stroke adjusting

If the stroke adjusting mechanism is selected as an option for bore sizes ϕ 10 [0.394] to ϕ 32 [1.260], stroke adjusting can easily be performed in the range shown on p.18. For stroke adjusting on either the extended or retracted side, rotating the stopper bolt or shock absorber to the right (clockwise) shortens the stroke. After adjustment, tighten the lock nut to secure in place. When mounting the shock absorber, do not exceed the maximum tightening torque shown below for the hexagon nut. Tightening in excess of the force could cause damage.

N·m [in·lbf]

Model	Max. tightening torque
KSHJ4×3, CS-KSHC3×3	0.5 [4.42]
KSHA4×4, CS-KSHC4×4	0.85 [7.52]
KSHA5×5, CS-KSHC5×5	2.5 [22.1]
KSHA6×8, CS-KSHC6×8	6.5 [57.5]
KSHJ12×6-01	8.0 [70.8]
KSHJ14×8-01	12.0 [106.2]

Stroke adjusting bracket set

Tighten screws properly with the tightening torque shown below when mounting the stroke adjusting bracket as an additional part.

① Stopper

② Bracket A

③ Bracket B

Stroke adjusting bracket tightening torque

Model	① Stopper		② Bracket A		③ Bracket B	
	Mounting screw	Tightening torque N·m [in·lbf]	Mounting screw	Tightening torque N·m [in·lbf]	Mounting screw	Tightening torque N·m [in·lbf]
MGA□10	M2.5×0.45	0.65 [5.75]	M3×0.5	1.14 [10.09]	M3×0.5	1.14 [10.09]
MGA□12	M3×0.5	1.14 [10.09]	M4×0.7	2.7 [23.9]	M4×0.7	2.7 [23.9]
MGA□16	M4×0.7	2.7 [23.9]	M5×0.8	5.4 [47.8]	M5×0.8	5.4 [47.8]
MGA□20	M4×0.7	2.7 [23.9]	M6×1	9.2 [81.4]	M5×0.8	5.4 [47.8]
MGA□25	M5×0.8	5.4 [47.8]	M5×0.8	5.4 [47.8]	M6×1	9.2 [81.4]
MGA□32	M1×1	9.2 [81.4]	M6×1	9.2 [81.4]	M6×1	9.2 [81.4]

Recommended fittings

For piping used with the Mini Guide Sliders, the quick fitting and speed controller with quick fitting shown below are recommended.

- ϕ 4.5 [0.177] to ϕ 10 [0.394]
  TS2-M3M (Straight), TSH2-M3M (Hexagon socket head straight), TL2-M3M (Elbow), SCC2-M3-□ (Elbow)
- ϕ 12 [0.472] to ϕ 25 [0.984]
  SSF4-M5-□ (free type)
- ϕ 32 [1.260]
  SSF6-01□ (free type)

Note: For details about the speed controller with quick fitting, refer to the quick fitting general catalog.

Mounting the sensor rail and magnet

The Mini Guide Slider has sensor rails and tapped holes for magnet mounting on both sides so that the sensor rail position can be changed or attached at a later time. When securing screws, tighten them at a suitable tightening torque within the allowable torque range. Always attach the plug for the piping connection port at the sensor rail side. When changing the plug position, apply sealant to the plug threads before screwing in. Install the plug at an intermediate position between the head protruding from the mounting sarface and bumping against the bottom.

Prevent sealant from entering inside the slider. This could lead to early shutdown of some functions or a sudden degradation of performance, and result in a reduced operating life.

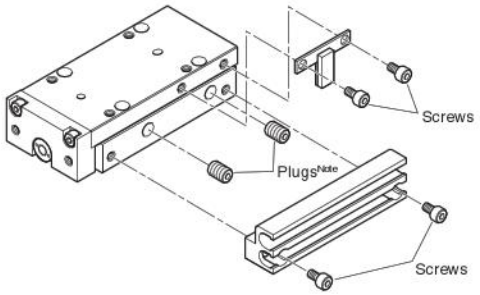

Note: Always apply sealant to the plug threads before screwing plugs in.

Mounting screw	Max. tightening torque N·m [in·lbf]
M2×0.4	0.30 [2.66]
M2.5×0.45	0.65 [5.75]

Accuracy

Mounting parallelism (Surface C against surface A and Surface D against surface B) mm

Bore size	Stroke 5	10	15	20	25	30	40	50	60	70	80	90	100	120	125	130	150
4.5	0.03	0.03	–	–	–	–	–	–	–	–	–	–	–	–	–	–	–
6	0.03	0.03	0.03	0.03	0.03	0.03	–	–	–	–	–	–	–	–	–	–	–
8	0.03	0.03	0.03	0.03	0.03	0.03	–	–	–	–	–	–	–	–	–	–	–
10	0.03	0.03	0.03	0.03	0.03	0.03	0.03	0.03	–	–	–	–	–	–	–	–	–
12	–	0.03	0.03	0.03	–	0.03	0.03	0.03	0.03	0.05	0.05	–	–	–	–	–	–
16	–	0.03	0.03	0.03	–	0.03	0.03	0.03	0.03	0.05	0.05	0.06	0.06	–	–	–	–
20	–	0.03	0.03	0.03	–	0.03	0.03	0.03	0.03	0.05	0.05	0.06	0.06	0.06	0.06	–	–
25	–	0.03	–	0.03	–	0.03	0.03	0.03	0.06	–	0.06	–	0.06	–	–	0.08	0.08
32	–	0.04	–	0.04	–	0.04	0.04	0.04	0.07	–	0.07	–	0.07	–	–	0.1	0.1

Traveling parallelism (Surface C against surface A and Surface D against surface B) mm

Bore size	Stroke 5	10	15	20	25	30	40	50	60	70	80	90	100	120	125	130	150
4.5	0.005	0.005	–	–	–	–	–	–	–	–	–	–	–	–	–	–	–
6	0.005	0.005	0.005	0.005	0.006	0.006	–	–	–	–	–	–	–	–	–	–	–
8	0.005	0.005	0.005	0.005	0.006	0.006	–	–	–	–	–	–	–	–	–	–	–
10	0.005	0.005	0.005	0.005	0.005	0.005	0.006	0.006	–	–	–	–	–	–	–	–	–
12	–	0.005	0.005	0.005	–	0.005	0.005	0.005	0.005	0.01	0.01	–	–	–	–	–	–
16	–	0.005	0.005	0.005	–	0.005	0.005	0.005	0.005	0.01	0.01	0.015	0.015	–	–	–	–
20	–	0.006	0.006	0.006	–	0.006	0.006	0.006	0.006	0.01	0.01	0.015	0.015	0.015	0.015	–	–
25	–	0.007	–	0.007	–	0.007	0.007	0.007	0.015	–	0.015	–	0.015	–	–	0.02	0.02
32	–	0.012	–	0.012	–	0.012	0.012	0.012	0.025	–	0.025	–	0.025	–	–	0.035	0.035

mm [in.]

Model	**MGA□4.5** to **□32**
Dimensional tolerance of E	±0.05 [±0.0020]
Dimensional tolerance of F	±0.05 [±0.0020]
Dimensional tolerance of G	±0.05 [±0.0020]

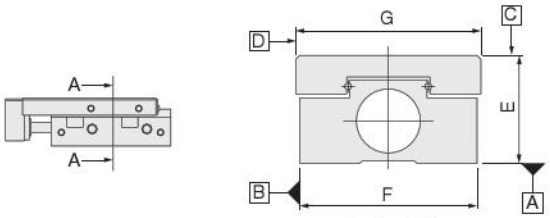

Section AA

Allowable load range

① ϕ4.5 [0.177] to ϕ10 [0.394] (excluding types -MS□ and -SS□ of ϕ10 [0.394])

Model	MGA□4.5	MGA□6	MGA□8	MGA□10
Allowable kinetic energy J [ft•lbf]	1.59×10^{-3} [1.17×10^{-3}]	2.83×10^{-3} [2.09×10^{-3}]	5.02×10^{-3} [3.70×10^{-3}]	7.85×10^{-3} [5.79×10^{-3}]

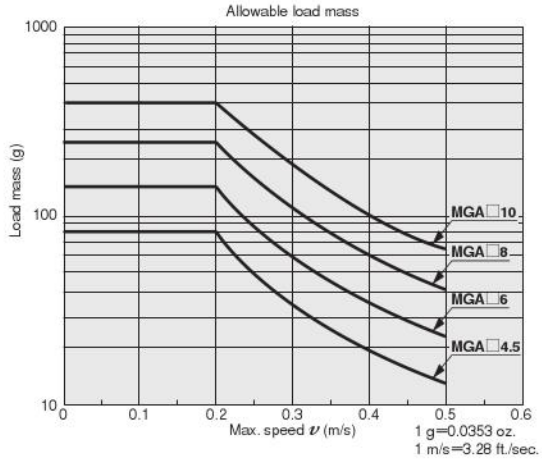

② ϕ12 [0.472] to ϕ32 [1.260] (no stroke adjusting)

Model	MGA□12	MGA□16	MGA□20	MGA□25	MGA□32
Allowable kinetic energy J [ft•lbf]	0.036 [0.027]	0.063 [0.046]	0.090 [0.066]	0.135 [0.100]	0.225 [0.166]

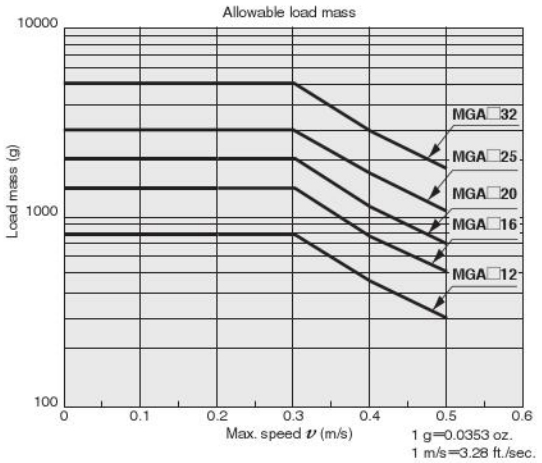

③ ϕ10 [0.394] to ϕ32 [1.260] with shock absorber (-SS□)

Model	MGA□10	MGA□12	MGA□16	MGA□20	MGA□25	MGA□32
Allowable kinetic energy J [ft•lbf]	0.045 [0.033]	0.067 [0.049]	0.135 [0.100]	0.225 [0.166]	0.360 [0.266]	0.540 [0.398]

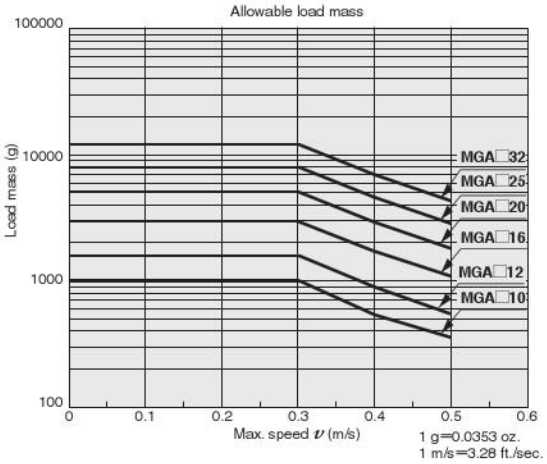

④ ϕ12 [0.472] to ϕ32 [1.260] with rubber stopper (-RS□)

Model	MGA□12	MGA□16	MGA□20	MGA□25	MGA□32
Allowable kinetic energy J [ft•lbf]	0.025 [0.018]	0.044 [0.032]	0.063 [0.046]	0.094 [0.069]	0.156 [0.115]

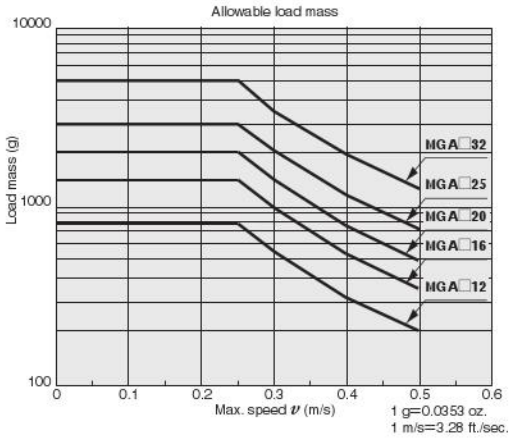

⑤ ϕ10 [0.394] to ϕ32 [1.260] with metal stopper (-MS□) and ϕ12 [0.472] to ϕ20 [0.787] of models MGAP and MGAE

Model	MGA□10	MGA□12	MGA□16	MGA□20	MGA□25	MGA□32
Allowable kinetic energy J [ft•lbf]	0.006 [0.0044]	0.012 [0.009]	0.020 [0.015]	0.030 [0.022]	0.050 [0.037]	0.080 [0.059]

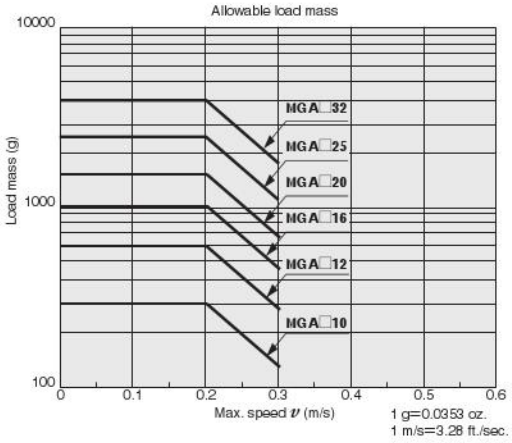

Allowable moment

The Mini Guide Sliders can be used with directly applying load. In this case, however, the load and moment should not exceed the values in the tables below. Pay attention if load is applied at the offset point from the guide portion in the stroke movement, the thrust force of the slider causes larger moment.

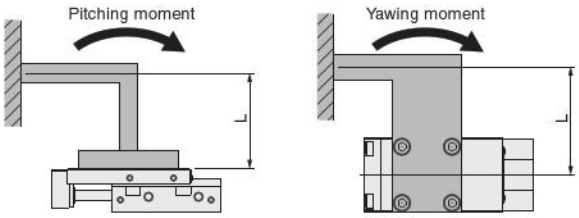

● Allowable moment

N・m [in・lbf]

Model	Mp	My	Mr
MGA□4.5	0.24 [2.12]	0.29 [2.57]	0.22 [1.95]
MGA□6	0.28 [2.48]	0.34 [3.01]	0.23 [2.04]
MGA□8	0.28 [2.48]	0.34 [3.01]	0.38 [3.36]
MGA□10	0.28 [2.48]	0.34 [3.01]	0.38 [3.36]
MGA□12	1.5 [13.3]	1.7 [15.0]	2.6 [23.0]
MGA□16	2.1 [18.6]	2.5 [22.1]	4.3 [38.1]
MGA□20	2.5 [22.1]	3.0 [26.6]	4.8 [42.5]
MGA□25	10.0 [88.5]	10.0 [88.5]	16.5 [146.0]
MGA□32	15.4 [136.3]	15.4 [136.3]	25.3 [223.9]

Remark: The allowable moment includes the safety factor of 10 with respect to the calculated value of the guide. However, the calculated values are not guaranteed values.

● Guide calculation values (reference values)

Model	Basic dynamic load rating C (N [lbf.])	Basic static load rating Co (N [lbf.])	Static moment rating (N・m [ft・lbf])		
			Mp	My	Mr
MGA□4.5	392 [88.1]	673 [151.3]	2.4 [1.77]	2.9 [2.14]	2.2 [1.62]
MGA□6	417 [93.7]	734 [165.0]	2.8 [2.07]	3.4 [2.51]	2.3 [1.70]
MGA□8	417 [93.7]	734 [165.0]	2.8 [2.07]	3.4 [2.51]	3.8 [2.80]
MGA□10	417 [93.7]	734 [165.0]	2.8 [2.07]	3.4 [2.51]	3.8 [2.80]
MGA□12	1710 [384]	2690 [605]	14.5 [10.70]	17.2 [12.69]	25.6 [18.88]
MGA□16	2390 [537]	3440 [773]	20.7 [15.27]	24.7 [18.22]	43.3 [31.94]
MGA□20	2570 [578]	3820 [859]	25.2 [18.59]	30.0 [22.13]	48.2 [35.55]
MGA□25	9110 [2048]	11000 [2473]	99.5 [73.39]	99.5 [73.39]	165.0 [121.70]
MGA□32	12400 [2788]	14100 [3170]	154.0 [113.59]	154.0 [113.59]	253.0 [186.61]

Remark: Values are the same for all strokes. These are not guaranteed values.

● Location of the guide center

mm [in.]

Model	Stroke	X		
		Standard	Buffer	Clean
MGA□4.5	5	30 [1.181]	40 [1.575]	35 [1.378]
	10			
MGA□6	5	31.5 [1.240]	41.5 [1.634]	36.5 [1.437]
	10			
	15	36.5 [1.437]	46.5 [1.831]	41.5 [1.634]
	20	41.5 [1.634]	51.5 [2.028]	46.5 [1.831]
	25	51.5 [2.028]	61.5 [2.421]	56.5 [2.224]
	30			
MGA□8	5	31.5 [1.240]	41.5 [1.634]	36.5 [1.437]
	10			
	15	41.5 [1.634]	51.5 [2.028]	46.5 [1.831]
	20			
	25	51.5 [2.028]	61.5 [2.421]	56.5 [2.224]
	30			
MGA□10	5	34 [1.339]	44 [1.732]	39 [1.535]
	10			
	15	44 [1.732]	54 [2.126]	49 [1.929]
	20			
	25	54 [2.126]	64 [2.520]	59 [2.323]
	30			
	40	79 [3.110]	89 [3.504]	84 [3.307]
	50			

● Direction of moment and location of the guide center X

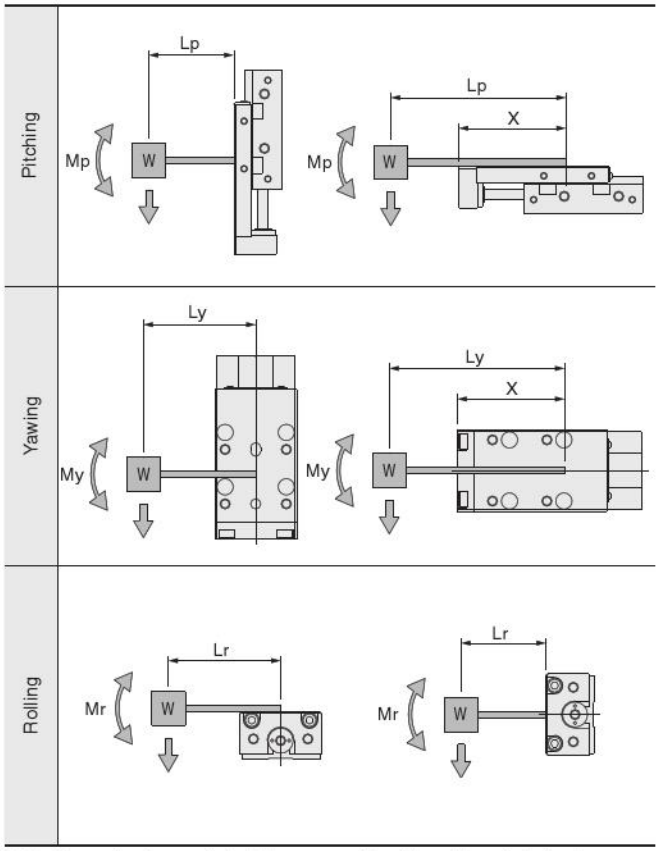

Note: The center of moment should be measured from the guide center in the diagrams.

mm [in.]

Model	Stroke	X		
		Standard	Buffer	Clean
MGA□12	10	49 [1.929]	64 [2.520]	57 [2.244]
	15			
	20			
	30	69 [2.717]	84 [3.307]	77 [3.031]
	40			
	50	89 [3.504]	104 [4.094]	97 [3.819]
	60			
	70	109 [4.291]	124 [4.882]	117 [4.606]
	80			
MGA□16	10	51 [2.008]	65 [2.559]	59 [2.323]
	15			
	20			
	30	71 [2.795]	85 [3.346]	79 [3.110]
	40			
	50	91 [3.583]	105 [4.134]	99 [3.898]
	60			
	70	111 [4.370]	125 [4.921]	119 [4.685]
	80			
	90	141 [5.551]	155 [6.102]	149 [5.866]
	100			
MGA□20	10	55 [2.165]	68 [2.677]	63 [2.480]
	15			
	20			
	30	75 [2.953]	88 [3.465]	83 [3.268]
	40			
	50	95 [3.740]	108 [4.252]	103 [4.055]
	60			
	70	115 [4.528]	128 [5.039]	123 [4.843]
	80			
	90	170 [6.693]	183 [7.205]	178 [7.008]
	100			
	120			
	125			

mm [in.]

Model	Stroke	X
MGA□25	10	97.5 [3.839]
	20	
	30	
	40	
	50	
	60	147.5 [5.807]
	80	
	100	
	130	197.5 [7.776]
	150	
MGA□32	10	103.5 [4.075]
	20	
	30	
	40	
	50	
	60	153.5 [6.043]
	80	
	100	
	130	213.5 [8.406]
	150	

Displacement angle of the table by bending moment

(Reference value)

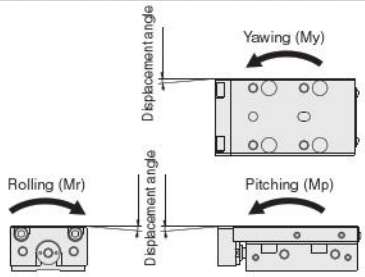

● ϕ4.5 [0.177 in.] ~ ϕ10 [0.394 in.]

Pitching (Mp)

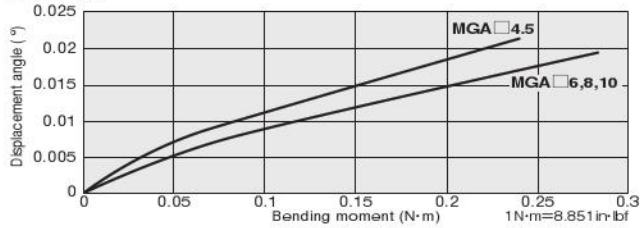

Yawing (My)

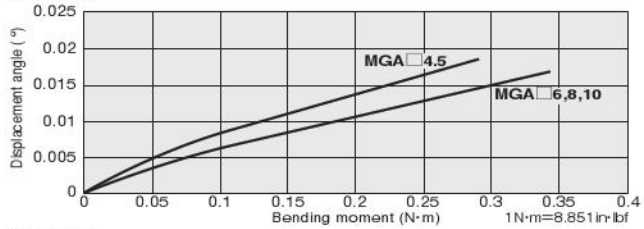

Rolling (Mr)

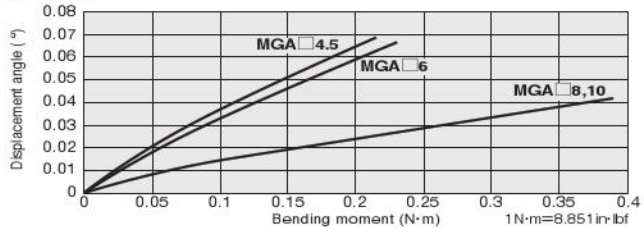

● ϕ12 [0.472 in.] ~ ϕ20 [0.787 in.]

Pitching (Mp)

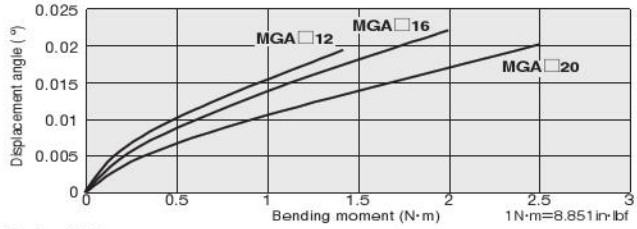

Yawing (My)

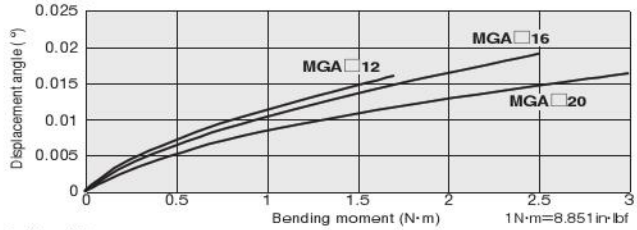

Rolling (Mr)

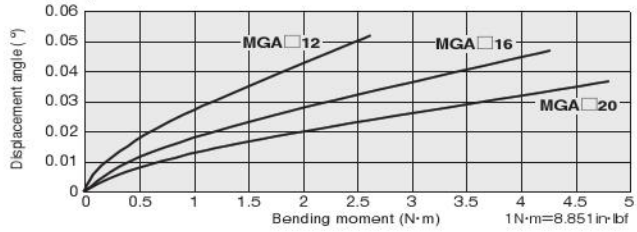

● ϕ25 [0.984 in.] ~ ϕ32 [1.260 in.]

Pitching (Mp)

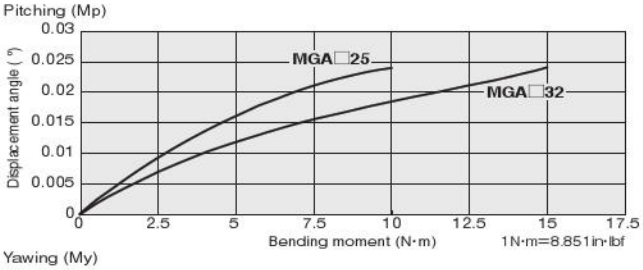

Yawing (My)

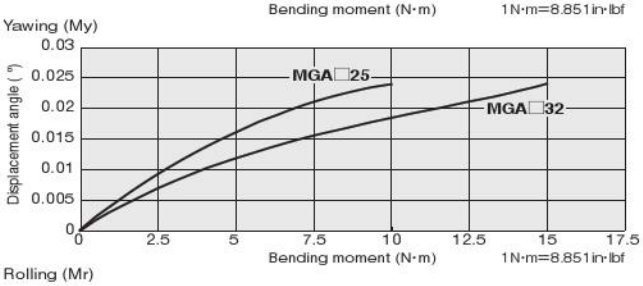

Rolling (Mr)

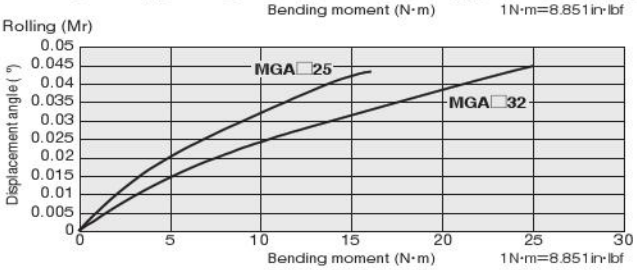

Control circuit for the end keep cylinder

1. For control of the Mini Guide Slider with end keep, use 2-position, 4-/5-port valves. Do not use 3-position valves. This could cause erratic operation of the locking mechanism.
2. Always use meter-out control for speed control. Meter-in control may result in failure of the locking mechanism to release.
3. Always set the operating air pressure to 0.2 MPa [29 psi.] or higher.

Cautions:
1. It is dangerous to supply air to a connection port on a side with a locking mechanism while the cylinder has already been exhausted, because the piston rod may suddenly extend (or retract). In addition, since the lock piston could also cause galling with the piston rod, resulting in defective operation. Always supply air to the connection port on the opposite side of the locking mechanism to ensure applying back pressure.
2. When restarting operations after air has been exhausted from the cylinder due to completion of operations or to an emergency stop, always start by supplying air to a connection port on the opposite side of the locking mechanism first.
3. Connect the valve port A (NC) to the connection port on the side with the locking mechanism.

Manual operation of end keep cylinder locking mechanism

While the locking mechanism is normally released automatically through cylinder operations, it can also be released manually. For manual release, insert an M3×0.5 screw that has 30 mm [1.18 in.] screw length into the manual override opening, thread it in about three turns into the internal lock piston, and then pull up the screw. To maintain the manual override for adjustment, etc., thread the locknut onto the screw and, with the locking mechanism in a released state, tighten the locknut against the cylinder.

Cautions:
1. It is dangerous to release the lock when load (weight) is present on the piston rod, because it may cause the unintended piston rod's extension (or retraction). In this case, always supply air to the connection port opposite the one adjacent to the locking mechanism before releasing the locking mechanism.
2. If the locking mechanism cannot easily be released even with manual override, it could be the result of galling of the lock piston and piston rod. In this case, supply air to the connection port opposite the one adjacent to the locking mechanism before releasing the locking mechanism.
3. Water, oil, dust, etc., intruding through the manual override opening may be a cause of defective locks or other erratic operation. If using in locations subject to dripping water, dripping oil, etc., or large amounts of dust, use something to cover and protect the unit.

MINI GUIDE SLIDERS

Standard Cylinders, Stroke Adjusting Cylinders, Cylinders with Buffer, Side-mounted Cylinders, Cylinders with End Keep, and Rear Piping Specification Cylinders

Symbol

● Standard and Side-Mounted Cylinders

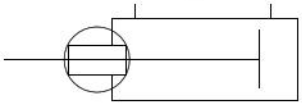

● Stroke Adjusting Cylinder

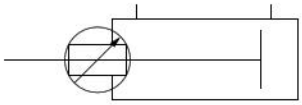

● Cylinder with End Keep

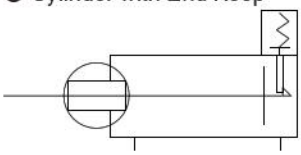

Specifications

● Standard Cylinders

Item \ Basic model		MGA□4.5	MGA□6	MGA□8	MGA□10	MGA□12	MGA□16	MGA□20	MGA□25	MGA□32
Bore size mm [in.]		4.5 [0.177]	6 [0.236]	8 [0.315]	10 [0.394]	12 [0.472]	16 [0.630]	20 [0.787]	25 [0.984]	32 [1.260]
Operation type		Double acting type								
Media		Air								
Operating pressure range MPa [psi.]		0.2~0.7 [29~102]		0.15~0.7 [22~102]		0.1~0.7 [15~102]				
Proof pressure MPa [psi.]		1.05 [152]								
Operating temperature range °C [°F]		0~60 [32~140]								
Operating speed range mm/s [in./sec.]		30~500 [1.2~20]			20~500 [0.8~20] (Metal stopper (optional):20~300 [0.8~12] (φ10: 30~500 [1.2~20] (Metal stopper (optional):30~300 [1.2~12])					
Cushion	Extended side	None	Rubber bumper		Rubber bumper Shock absorber (optional)					
	Retracted side									
Port size		M3×0.5				M5×0.8				Rc1/8
Lubrication	Cylinder portion	Not required (If lubrication is required, use Turbine Oil Class 1 [ISO VG32] or equivalent.)								
	Guide portion	Required (CGL grease Nippon Thompson Co., Ltd. made) Note 1								
Perpendicularity of end plate mm [in.]		0.1 [0.004]								
Stroke tolerance mm [in.]		$^{+1}_{0}$ [$^{+0.039}_{0}$]								
Repeatability Note2 mm [in.]		—			±0.02 [±0.0008] (Metal stopper, shock absorber)					
Stroke adjusting range Note2 mm [in.]	Metal stopper extended side	—			−9~0 [−0.354~0]	−8~0 [−0.315~0]	−7~0 [−0.276~0]	−7~0 [−0.276~0]	−16~0 [−0.630~0]	−13~0 [−0.512~0]
	Metal stopper retracted side	—			−10~0 [−0.394~0]	−10~0 [−0.394~0]	−8~0 [−0.315~0]	−10~0 [−0.394~0]	−17~0 [−0.669~0]	−14~0 [−0.551~0]
	Rubber stopper extended side	—			—	−9~0 [−0.354~0]	−8~0 [−0.315~0]	−8~0 [−0.315~0]	−14~0 [−0.551~0]	−13~0 [−0.512~0]
	Rubber stopper retracted side	—			—	−11~0 [−0.433~0]	−9~0 [−0.354~0]	−11~0 [−0.433~0]	−15~0 [−0.591~0]	−14~0 [−0.551~0]
	Shock absorber extended side	—			−8~0 [−0.315~0]	−9~0 [−0.354~0]	−7~0 [−0.276~0]	−12~0 [−0.472~0]	−23~0 [−0.906~0]	−31~0 [−1.220~0]
	Shock absorber retracted side	—			−9~0 [−0.354~0]	−11~0 [−0.433~0]	−8~0 [−0.315~0]	−15~0 [−0.591~0]	−21~0 [−0.827~0]	−31~0 [−1.220~0]
Allowable moment N・m [in・lbf]	Mp	0.24 [2.12]	0.28 [2.48]	0.28 [2.48]	0.28 [2.48]	1.5 [13.3]	2.1 [18.6]	2.5 [22.1]	10.0 [88.5]	15.4 [136.3]
	My	0.29 [2.57]	0.34 [3.01]	0.34 [3.01]	0.34 [3.01]	1.7 [15.0]	2.5 [22.1]	3.0 [26.6]	10.0 [88.5]	15.4 [136.3]
	Mr	0.22 [1.95]	0.23 [2.04]	0.38 [3.36]	0.38 [3.36]	2.6 [23.0]	4.3 [38.1]	4.8 [42.5]	16.5 [146.0]	25.3 [223.9]
Number of available sensor switches (optional)		2 pcs.								

Notes: 1. Apply lithium soap-based grease on the raceway surface of the track rail in the guide portion every six months or 3 million operations.
2. For units with stroke adjusting mechanism.

Remark 1: For the specifications and details of the shock absorber, see the General Catalog and Shock Absorber Catalog.
2: Touching the body of the product with bare hands may cause rusting because of salt content in sweat. It is advisable to wear gloves.

● Stroke Adjusting Cylinders

Item \ Basic model		Extended side stroke MGAP□4.5	Extended/retracted-side stroke MGAE□4.5	Extended side stroke MGAP□6	Extended/retracted-side stroke MGAE□6	Extended side stroke MGAP□8	Extended/retracted-side stroke MGAE□8	Extended side stroke MGAP□10	Extended/retracted-side stroke MGAE□10
Bore size mm [in.]		4.5 [0.177]		6 [0.236]		8 [0.315]		10 [0.394]	
Operation type		Double acting type							
Media		Air							
Operating pressure range MPa [psi.]		0.25~0.7 [36~102]		0.2~0.7 [29~102]		0.15~0.7 [22~102]			
Proof pressure MPa [psi.]		1.05 [152]							
Operating temperature range °C [°F]		0~60 [32~140]							
Operating speed range mm/s [in./sec.]		30~500 [1.2~20]							
Cushion	Extended side	None (External metal stopper)						Shock absorber (Optional)	
	Retracted side	None	None (External metal stopper)	Rubber bumper	None (External metal stopper)	Rubber bumper	None (External metal stopper)	Rubber bumper	Shock absorber (Optional)
Stroke adjusting range mm [in.]	Metal stopper extended side	−5~0 [−0.197~0]							
	Metal stopper retracted side	—	−7~0 [−0.276~0]	—	−7~0 [−0.276~0]	—	−7~0 [−0.276~0]	—	−12~0 [−0.472~0]
	Rubber stopper retracted side								
	Shock absorber retracted side	—							−11~0 [−0.433~0]
Repeatability mm [in.]		±0.02 [±0.0008] (External metal stopper)						±0.02 [±0.0008] (External metal stopper, shock absorber)	
Port size		M3×0.5							
Lubrication	Cylinder portion	Not required (If lubrication is required, use Turbine Oil Class 1 [ISO VG32] or equivalent.)							
	Guide portion	Required (CGL grease Nippon Thompson Co., Ltd. made) Note							
Perpendicularity of end plate mm [in.]		0.1 [0.004]							
Stroke tolerance mm [in.]		$^{+1}_{0}$ [$^{+0.039}_{0}$]							
Allowable moment N・m [in・lbf]	Mp	0.24 [2.12]		0.28 [2.48]		0.28 [2.48]		0.28 [2.48]	
	My	0.29 [2.57]		0.34 [3.01]		0.34 [3.01]		0.34 [3.01]	
	Mr	0.22 [1.95]		0.23 [2.04]		0.38 [3.36]		0.38 [3.36]	
Number of available sensor switches (optional)		2 pcs.							

Note: Apply lithium soap-based grease on the raceway surface of the track rail in the guide portion every six months or 3 million operations.
Remark 1: For the specifications and details of the shock absorber, see the General Catalog and Shock Absorber Catalog.
2: Touching the body of the product with bare hands may cause rusting because of salt content in sweat. It is advisable to wear gloves.

Specifications

● Stroke Adjusting Cylinders

		Extended side stroke	Extended/retracted-side stroke	Extended side stroke	Extended/retracted-side stroke	Extended side stroke	Extended/retracted-side stroke
		MGAP□12	**MGAE□12**	**MGAP□16**	**MGAE□16**	**MGAP□20**	**MGAE□20**
Bore size mm [in.]		12 [0.472]		16 [0.630]		20 [0.787]	
Operation type		Double acting type					
Media		Air					
Operating pressure range MPa [psi.]		0.12 ~ 0.7 [17 ~ 102]					
Proof pressure MPa [psi.]		1.05 [152]					
Operating temperature range ℃ [°F]		0 ~ 60 [32 ~ 140]					
Operating speed range mm/s [in./sec.]		20 ~ 300 [0.8 ~ 12] (Shock absorber, rubber stopper: 20 ~ 500 [0.8 ~ 20])					
Cushion	Extended side	Shock absorber (optional)					
	Retracted side	Rubber bumper	Shock absorber, rubber bumper (optional)	Rubber bumper	Shock absorber, rubber bumper (optional)	Rubber bumper	Shock absorber, rubber bumper (optional)
Stroke adjusting range mm [in.]	Metal stopper extended side	− 10 ~ 0 [-0.394 ~ 0]					
	Metal stopper retracted side	—	− 9 ~ 0 [-0.354 ~ 0]	—	−7 ~ 0 [−0.276 ~ 0]	—	− 10 ~ 0 [-0.394 ~ 0]
	Rubber stopper retracted side	—	− 10 ~ 0 [-0.394 ~ 0]	—	− 8 ~ 0 [−0.315 ~ 0]	—	− 11 ~ 0 [-0.433 ~ 0]
	Shock absorber retracted side	—	− 10 ~ 0 [-0.394 ~ 0]	—	−7 ~ 0 [−0.276 ~ 0]	—	− 15 ~ 0 [-0.591 ~ 0]
Repeatability mm [in.]		±0.05(External metal stopper, shock absorber)					
Port size		M5×0.8					
Lubrication	Cylinder portion	Not required (If lubrication is required, use Turbine Oil Class 1 [ISO VG32] or equivalent.)					
	Guide portion	Required (CGL grease Nippon Thompson Co., Ltd. made)Note					
Perpendicularity of end plate mm [in.]		0.1 [0.004]					
Stroke tolerance mm [in.]		$^{+1}_{0}$ $\left[^{+0.039}_{0}\right]$					
Allowable moment N·m [in・lbf]	Mp	1.5 [13.3]		2.1 [18.6]		2.5 [22.1]	
	My	1.7 [15.0]		2.5 [22.1]		3 [26.6]	
	Mr	2.6 [23.0]		4.3 [38.1]		4.8 [42.5]	
Number of available sensor switches (optional)		2 pcs.					

Note: Apply lithium soap-based grease on the raceway surface of the track rail in the guide portion every six months or 3 million operations.
Remark 1: For the specifications and details of the shock absorber, see the General Catalog and Shock Absorber Catalog.
2: Touching the body of the product with bare hands may cause rusting because of salt content in sweat. It is advisable to wear gloves.

● Side-mounted Cylinders and Rear Piping Specification Cylinders

		Side-mounted	Rear piping	Side-mounted	Rear piping	Side-mounted	Rear piping	Side-mounted	Rear piping			
		MGAL□4.5	**MGAH□4.5**	**MGAL□6**	**MGAH□6**	**MGAL□8**	**MGAH□8**	**MGAL□10**	**MGAH□10**	**MGAH□12**	**MGAH□16**	**MGAH□20**
Bore size mm		4.5 [0.177]		6 [0.236]		8 [0.315]		10 [0.394]	10 [0.394]	12 [0.472]	16 [0.630]	20 [0.787]
Operation type		Double acting type										
Media		Air										
Operating pressure range MPa [psi.]		0.2 ~ 0.7 [29 ~ 102]				0.15 ~ 0.7 [22 ~ 102]				0.1 ~ 0.7 [15 ~ 102]		
Proof pressure MPa [psi.]		1.05 [152]										
Operating temperature range ℃ [°F]		0 ~ 60 [32 ~ 140]										
Operating speed range mm/s [in./sec.]		30 ~ 500 [1.2 ~ 20]								20 ~ 500 [0.8 ~ 20]		
Cushion	Extended side	None		Rubber bumper					Rubber bumper, shock absorber (optional, only extended side)			
	Retracted side								Rubber bumper			
Stroke adjusting range mm [in.]	Metal stopper extended side	—							− 9 ~ 0 [-0.354 ~ 0]	− 8 ~ 0 [−0.315 ~ 0]	−7 ~ 0 [−0.276 ~ 0]	−7 ~ 0 [−0.276 ~ 0]
	Rubber stopper extended side	—							—	− 9 ~ 0 [-0.354 ~ 0]	− 8 ~ 0 [−0.315 ~ 0]	− 8 ~ 0 [−0.315 ~ 0]
	Shock absorber retracted side	—							− 8 ~ 0 [−0.315 ~ 0]	− 9 ~ 0 [-0.354 ~ 0]	−7 ~ 0 [−0.276 ~ 0]	− 12 ~ 0 [−0472 ~ 0]
Repeatability mm [in.]		—							±0.02 [±0.0008] (External metal stopper, shock absorber)			
Port size		M3×0.5								M5×0.8		
Lubrication	Cylinder portion	Not required (If lubrication is required, use Turbine Oil Class 1 [ISO VG32] or equivalent.)										
	Guide portion	Required (CGL grease Nippon Thompson Co., Ltd. made)Note										
Perpendicularity of end plate mm [in.]		0.1 [0.004]										
Stroke tolerance mm [in.]		$^{+1}_{0}$ $\left[^{+0.039}_{0}\right]$										
Allowable moment N·m [in・lbf]	Mp	0.24 [2.12]		0.28 [2.48]		0.28 [2.48]		0.28 [2.48]		1.5 [13.3]	2.1 [18.6]	2.5 [22.1]
	My	0.29 [2.57]		0.34 [3.01]		0.34 [3.01]		0.34 [3.01]		1.7 [15.0]	2.5 [22.1]	3.0 [26.6]
	Mr	0.22 [1.95]		0.23 [2.04]		0.38 [3.36]		0.38 [3.36]		2.6 [23.0]	4.3 [38.1]	4.8 [42.5]
Number of available sensor switches (optional)		2 pcs.										

Note: Apply lithium soap-based grease on the raceway surface of the track rail in the guide portion every six months or 3 million operations.
Remark 1: For the specifications and details of the shock absorber, see the General Catalog and Shock Absorber Catalog.
2: Touching the body of the product with bare hands may cause rusting because of salt content in sweat. It is advisable to wear gloves.

● Cylinders with buffer

Item / Model		MGAG□4.5	MGAG□6	MGAG□8	MGAG□10	MGAG□12	MGAG□16	MGAG□20
Bore size	mm [in.]	4.5 [0.177]	6 [0.236]	8 [0.315]	10 [0.394]	12 [0.472]	16 [0.630]	20 [0.787]
Buffer stroke	mm [in.]	4 [0.157] MAX.				6 [0.236] MAX.		
Spring return force N [lbf.]	At zero stroke	0.3 [0.067]			0.9 [0.202]	1.0 [0.225]	1.4 [0.315]	1.4 [0.315]
	At stroke end	0.7 [0.157]			2.0 [0.450]	2.7 [0.607]	4.3 [0.967]	4.3 [0.967]
Mounting direction		Vertically downward or horizontal						
Operating speed range	mm/s [in./sec.]	30～500 [1.2～20] (When used horizontally: 30～300 [1.2～12])				20～500 [0.8～20] (When used horizontally: 20～300 [0.8～12])		

Remark: With the exception of the dedicated specification items for cylinder with buffer, the standard cylinder specifications applly to other items.

● Cylinders with end keep

Item / Model		MGAK□12	MGAK□16	MGAK□20
Bore size	mm [in.]	12 [0.472]	16 [0.630]	20 [0.787]
Operating pressure range	MPa [psi.]	0.2～0.7 [29～102]		
Backlash (at end keep)	mm [in.]	1 [0.039] MAX.		

Remark: With the exception of the dedicated specification items for cylinder with end keep, the standard cylinder specifications applly to other items.

Cylinder Thrust

● Standard Cylinders, Side-mounted Cylinders, Cylinders with Buffer, and Cylinders with End Keep

N [lbf.]

Bore size mm [in.]	Piston rod diameter mm [in.]	Operating direction	Pressure area mm² [in.²]	Air pressure MPa [psi.]						
				0.1 [15]	0.2 [29]	0.3 [44]	0.4 [58]	0.5 [73]	0.6 [87]	0.7 [102]
4.5 [0.177]	2 [0.079]	Push side	15.9 [0.0246]	—	3.2 [0.72]	4.8 [1.08]	6.4 [1.44]	8.0 [1.80]	9.5 [2.14]	11.1 [2.50]
		Pull side	12.8 [0.0198]	—	2.6 [0.58]	3.8 [0.85]	5.1 [1.15]	6.4 [1.44]	7.7 [1.73]	9.0 [2.02]
6 [0.236]	3 [0.118]	Push side	28.2 [0.0437]	—	5.6 [1.26]	8.5 [1.91]	11.3 [2.54]	14.1 [3.17]	16.9 [3.80]	19.7 [4.43]
		Pull side	21.2 [0.0329]	—	4.2 [0.94]	6.4 [1.44]	8.5 [1.91]	10.6 [2.38]	12.7 [2.85]	14.8 [3.33]
8 [0.315]	3 [0.118]	Push side	50.3 [0.0780]	—	10.1 [2.27]	15.1 [3.39]	20.1 [4.52]	25.2 [5.66]	30.2 [6.79]	35.2 [7.91]
		Pull side	43.2 [0.0670]	—	8.6 [1.93]	13.0 [2.92]	17.3 [3.89]	21.6 [4.86]	25.9 [5.82]	30.2 [6.79]
10 [0.394]	4 [0.157]	Push side	78.5 [0.1217]	—	15.7 [3.53]	23.6 [5.31]	31.4 [7.06]	39.3 [8.83]	47.1 [10.59]	55.0 [12.36]
		Pull side	65.9 [0.1021]	—	13.2 [2.97]	19.8 [4.45]	26.4 [5.93]	33.0 [7.42]	39.5 [8.88]	46.1 [10.36]
12 [0.472]	5 [0.197]	Push side	113.0 [0.1752]	11.3 [2.54]	22.6 [5.08]	33.9 [7.62]	45.2 [10.16]	56.5 [12.70]	67.8 [15.24]	79.1 [17.78]
		Pull side	93.4 [0.1448]	9.3 [2.09]	18.7 [4.20]	28.0 [6.29]	37.4 [8.41]	46.7 [10.50]	56.0 [12.59]	65.4 [14.70]
16 [0.630]	6 [0.236]	Push side	201.0 [0.3116]	20.1 [4.52]	40.2 [9.04]	60.3 [13.56]	80.4 [18.07]	100.5 [22.59]	120.6 [27.11]	140.7 [31.63]
		Pull side	172.7 [0.2677]	17.3 [3.89]	34.5 [7.76]	51.8 [11.64]	69.1 [15.53]	86.4 [19.42]	103.6 [23.29]	120.9 [27.18]
20 [0.787]	8 [0.315]	Push side	314.0 [0.4867]	31.4 [7.06]	62.8 [14.12]	94.2 [21.18]	125.6 [28.23]	157.0 [35.29]	188.4 [42.35]	219.8 [49.41]
		Pull side	263.8 [0.4089]	26.4 [5.93]	52.8 [11.87]	79.1 [17.78]	105.5 [23.72]	131.9 [29.65]	158.3 [35.59]	184.6 [41.50]
25 [0.984]	10 [0.394]	Push side	490.6 [0.7604]	49.1 [11.04]	98.1 [22.05]	147.2 [33.09]	196.3 [44.13]	245.3 [55.14]	294.4 [66.18]	343.4 [77.20]
		Pull side	412.1 [0.6388]	41.2 [9.26]	82.4 [18.52]	123.6 [27.79]	164.9 [37.07]	206.1 [46.33]	247.3 [55.59]	288.5 [64.85]
32 [1.260]	12 [0.472]	Push side	803.8 [1.2459]	80.4 [18.07]	160.8 [36.15]	241.2 [54.22]	321.5 [72.27]	401.9 [90.35]	482.3 [108.42]	562.7 [126.49]
		Pull side	690.8 [1.0707]	69.1 [15.53]	138.2 [31.07]	207.2 [46.58]	276.3 [62.11]	345.4 [77.65]	414.5 [93.18]	483.6 [108.71]

● Stroke Adjusting Cylinders

N [lbf.]

Bore size mm [in.]	Piston rod diameter mm [in.]	Operating direction	Pressure area mm² [in.²]	Air pressure MPa [psi.]						
				0.1 [15]	0.2 [29]	0.3 [44]	0.4 [58]	0.5 [73]	0.6 [87]	0.7 [102]
4.5 [0.177]	2 [0.079]	Push side, Pull side	12.8 [0.0198]	–	2.6 [0.58]	3.8 [0.85]	5.1 [1.15]	6.4 [1.44]	7.7 [1.73]	9.0 [2.02]
6 [0.236]	3 [0.118]	Push side, Pull side	21.2 [0.0329]	–	4.2 [0.94]	6.4 [1.44]	8.5 [1.91]	10.6 [2.38]	12.7 [2.85]	14.8 [3.33]
8 [0.315]	3 [0.118]	Push side, Pull side	43.2 [0.0670]	–	8.6 [1.93]	13.0 [2.92]	17.3 [3.89]	21.6 [4.86]	25.9 [5.82]	30.2 [6.79]
10 [0.394]	4 [0.157]	Push side, Pull side	65.9 [0.1021]	–	13.2 [2.97]	19.8 [4.45]	26.4 [5.93]	33.0 [7.42]	39.5 [8.88]	46.1 [10.36]
12 [0.472]	5 [0.197]	Push side, Pull side	93.4 [0.145]	9.3 [2.08]	18.7 [4.19]	28 [6.27]	37.4 [8.38]	46.7 [10.46]	56 [12.54]	65.4 [14.65]
16 [0.63]	6 [0.236]	Push side, Pull side	172.7 [0.267]	17.3 [3.88]	34.5 [7.73]	51.8 [11.6]	69.1 [15.48]	86.4 [19.35]	103.6 [23.21]	120.9 [27.08]
20 [0.787]	8 [0.315]	Push side, Pull side	263.8 [0.408]	26.4 [5.91]	52.8 [11.83]	79.1 [17.72]	105.5 [23.63]	131.9 [29.55]	158.3 [35.46]	184.6 [41.35]

Bore Size and Stroke

mm [in.]

Bore size	Standard strokes
4.5 [0.177]	5[Note], 10
6 [0.236]	5[Note], 10, 15, 20, 25[Note], 30
8 [0.315]	5[Note], 10, 15[Note], 20, 25[Note], 30
10 [0.394]	5[Note], 10, 15[Note], 20, 25[Note], 30, 40[Note], 50
12 [0.472]	10[Note], 15[Note], 20, 30[Note], 40, 50[Note], 60, 70[Note], 80
16 [0.630]	10[Note], 15[Note], 20, 30[Note], 40, 50[Note], 60, 70[Note], 80, 90[Note], 100
20 [0.787]	10[Note], 15[Note], 20, 30[Note], 40, 50[Note], 60, 70[Note], 80, 90[Note], 100[Note], 120[Note], 125
25 [0.984]	10[Note], 20[Note], 30[Note], 40[Note], 50, 60[Note], 80[Note], 100, 130[Note], 150
32 [1.260]	10[Note], 20[Note], 30[Note], 40[Note], 50, 60[Note], 80[Note], 100, 130[Note], 150

Note: The collar packed is used in these strokes.

● φ4.5 [0.177]～φ8 [0.315]

MGA [ ] [ ] [×] - [ ] - [ ] [ ] - [ ] [ ] [ ]

Mini guide slider

Functions
Blank : Standard cylinder
P : Extended side stroke adjusting cylinder
E : Extended/retracted-side stroke adjusting cylinder
L : Side-mounted cylinder
G : Cylinder with buffer
PG : Extended side stroke adjusting cylinder with buffer
EG : Extended/retracted-side stroke adjusting cylinder with buffer
LG : Side-mounted cylinder with buffer
H : Standard cylinder, rear piping specifications
GH : Standard cylinder, rear piping specification cylinder with buffer

Magnet and sensor rail
Blank : No magnet and sensor rail
S : With magnet and sensor rail (One sensor rail for φ4.5 [0.177] cylinders and two sensor rails for φ6 [0.236] to φ8 [0.315] cylinders)
SS : With magnet and sensor rail (Two sensor rails only for φ4.5 [0.177] cylinders)

Bore size
×
Stroke
● See the bore size and stroke on p.20.

Piping direction
(Note: Excluding side-mounted cylinder)
R : Right side as viewed from the rod side
L : Left side as viewed from the rod side

Table direction
(Note: Side-mounted cylinder only)
R : Right side as viewed from the rod side
L : Left side as viewed from the rod side

Number of pins
1 : With one pin
2 : With two pins
3 : With three pins
4 : With four pins

Locating pin
Blank: No pin
P : With pin

Sensor switch type
Blank : No sensor switch
ZE135 : 2-lead wire, solid state type
ZE155 : 3-lead wire, solid state NPN output type
ZE175 : 3-lead wire, solid state PNP output type
ZE235 : 2-lead wire, solid state type
ZE255 : 3-lead wire, solid state NPN output type
ZE275 : 3-lead wire, solid state PNP output type
ZE101 : 2-lead wire, reed switch type
ZE102 : 2-lead wire, reed switch type
ZE201 : 2-lead wire, reed switch type
ZE202 : 2-lead wire, reed switch type
ZLS1: Linear magnetic sensor, horizontal[Note]
ZLS2: Linear magnetic sensor, vertical[Note]
●See p.172 for details of solid state type and reed switch type sensor switches and see p.178 for details of linear magnetic sensors.

Note: Comes with the controller (ZL1-C-3L).

Lead wire length
A : 1000 mm [39 in.]
B : 3000 mm [118 in.]
G : 300 mm [11.8 in.] with M8 connector, only for **ZE175** and **ZE275**

Number of sensor switches
1 : With one sensor switch
2 : With two sensor switches

● φ10 [0.394]

MGA □ □ × □ - □ - □ □ - □ □ - □ □ □

Mini guide slider

Functions
Blank : Standard cylinder
P : Extended side stroke adjusting cylinder
E : Extended/retracted-side stroke adjusting cylinder
L : Side-mounted cylinder
G : Cylinder with buffer
PG : Extended side stroke adjusting cylinder with buffer
EG : Extended/retracted-side stroke adjusting cylinder with buffer
LG : Side-mounted cylinder with buffer
H : Standard cylinder, rear piping specifications
GH : Standard cylinder, rear piping specification cylinder with buffer

Magnet and sensor rail
Blank : No magnet and sensor rail
S : With magnet and sensor rail

Bore size
×
Stroke
● See the bore size and stroke on p.20.

Piping direction
(Note: Excluding side-mounted cylinder)
R : Right side as viewed from the rod side
L : Left side as viewed from the rod side

Table direction
(Note: Side-mounted cylinder only)
R : Right side as viewed from the rod side
L : Left side as viewed from the rod side

Stroke adjusting mechanism
Blank : No stroke adjusting mechanism Note 1
MS : With metal stopper Note 1
SS : With shock absorber Note 1

Stroke adjusting position
Blank : No stroke adjustment
2 : Both ends (with two stroke adjustments) Note 1
F : Extended end (with one stroke adjustment) Note 1
R : Retracted end (with one stroke adjustment) Note 1

Locating pin
Blank: No pin
P : With pin

Number of pins
1 : With one pin
2 : With two pins
3 : With three pins
4 : With four pins

Sensor switch type
Blank : No sensor switch
ZE135 : 2-lead wire, solid state type
ZE155 : 3-lead wire, solid state NPN output type
ZE175 : 3-lead wire, solid state PNP output type
ZE235 : 2-lead wire, solid state type
ZE255 : 3-lead wire, solid state NPN output type
ZE275 : 3-lead wire, solid state PNP output type
ZE101 : 2-lead wire, reed switch type
ZE102 : 2-lead wire, reed switch type
ZE201 : 2-lead wire, reed switch type
ZE202 : 2-lead wire, reed switch type
ZLS1 : Linear magnetic sensor, horizontal Note 2
ZLS2 : Linear magnetic sensor, vertical Note 2
● See p.172 for details of solid state type and reed switch type sensor switches and see p.178 for details of linear magnetic sensors.

Lead wire length
A : 1000 mm [39 in.]
B : 3000 mm [118 in.]
G : 300 mm [11.8 in.] with M8 connector, only for **ZE175** and **ZE275**

Number of sensor switches Note
1 : With one sensor switch
2 : With two sensor switches

Note 1: For details, see the Product Range and Optional Combinations below. Since the extended side stroke adjusting cylinder, extended/retracted-side stroke adjusting cylinder, extended side stroke adjusting cylinder with buffer, and extended/retracted-side stroke adjusting cylinder with buffer all come with a metal stopper as standard, you do not need to select **-MS**.
2: Comes with the controller (ZL1-C-3L).

● Mini Guide Sliders φ10 [0.394] Product Range and Optional Combinations

Model	Type	Metal stopper			Shock absorber		
		Extended end -MSF	Retracted end -MSR	Both ends -MS2	Extended end -SSF	Retracted end -SSR	Both ends -SS2
MGA10	Standard cylinder	●	●	●	●	●	●
MGAP10	Extended side stroke adjusting cylinder	—	—	—	●	—	—
MGAE10	Extended/retracted-side stroke adjusting cylinder	—	—	—	●	●	●
MGAL10	Side-mounted cylinder	—	—	—	—	—	—
MGAG10	Cylinder with buffer	—	●	—	—	●	—
MGAPG10	Extended side stroke adjusting cylinder with buffer	—	—	—	—	—	—
MGAEG10	Extended/retracted-side stroke adjusting cylinder with buffer	—	—	—	—	●	—
MGALG10	Side-mounted cylinder with buffer	—	—	—	—	—	—
MGAH10	Rear piping specifications	●	—	—	●	—	—
MGAGH10	Rear piping specification cylinder with buffer	—	—	—	—	—	—

Order Codes

● φ12 [0.472]～φ20 [0.787]

MGA [ ] [ ] [×] - [ ] - [ ] [ ] - [ ] [ ] - [ ] [ ] [ ]

Mini guide slider

Bore size
×
Stroke

● See the bore size and stroke on p.14.

Piping direction
R : Right side as viewed from the rod side
L : Left side as viewed from the rod side

Magnet and sensor rail
Blank : No magnet and sensor rail
S : With magnet and sensor rail

Functions
Blank : Standard cylinder
P : Extended side stroke adjusting cylinder
E : Extended/retracted-side stroke adjusting cylinder
G : Cylinder with buffer
PG : Extended side stroke adjusting cylinder with buffer
EG : Extended/retracted-side stroke adjusting cylinder with buffer
K : Cylinder with end keep
GK : Cylinder with buffer end keep
H : Standard cylinder, rear piping specifications
GH : Standard cylinder, rear piping specification cylinder with buffer

Stroke adjusting mechanism
Blank : No stroke adjusting mechanism Note 1
MS : With metal stopper Note 1
RS : With rubber stopper Note 1
SS : With shock absorber Note 1

Stroke adjusting position
Blank : No stroke adjustment
2 : Both ends (with two stroke adjustments) Note 1
F : Extended end (with one stroke adjustment) Note 1
R : Retracted end (with one stroke adjustment) Note 1

Locating pin
Blank : Without pin
P : With pin

Number of pins
1 : With one pin
2 : With two pins
3 : With three pins
4 : With four pins

Sensor switch type
Blank : No sensor switch
ZE135 : 2-lead wire, solid state type
ZE155 : 3-lead wire, solid state NPN output type
ZE175 : 3-lead wire, solid state PNP output type
ZE235 : 2-lead wire, solid state type
ZE255 : 3-lead wire, solid state NPN output type
ZE275 : 3-lead wire, solid state PNP output type
ZE101 : 2-lead wire, reed switch type
ZE102 : 2-lead wire, reed switch type
ZE201 : 2-lead wire, reed switch type
ZE202 : 2-lead wire, reed switch type
ZLS1 : Linear magnetic sensor, horizontal Note 2
ZLS2 : Linear magnetic sensor, vertical Note 2

● See p.172 for details of solid state type and reed switch type sensor switches and see p.178 for details of linear magnetic sensors.

Lead wire length
A : 1000 mm [39 in.]
B : 3000 mm [118 in.]
G : 300 mm [11.8 in.] with M8 connector, only for **ZE175** and **ZE275**

Number of sensor switches
1 : With one sensor switch
2 : With two sensor switches

Note 1: For details, see the Product Range and Optional Combinations below. Since the extended side stroke adjusting cylinder, extended/retracted-side stroke adjusting cylinder, extended side stroke adjusting cylinder with buffer, and extended/retracted-side stroke adjusting cylinder with buffer all come with a metal stopper as standard, you do not need to select **-MS**.
2: Comes with the controller (ZL1-C-3L).

● Mini Guide Sliders φ12, 16, 20 [φ0.472, 0.630, 0.787] Product Range and Optional Combinations

Model	Type	Metal stopper			Rubber stopper			Shock absorber		
		Extended end -MSF	Retracted end -MSR	Both ends -MS2	Extended end -RSF	Retracted end -RSR	Both ends -RS2	Extended end -SSF	Retracted end -SSR	Both ends -SS2
MGA12,16,20	Standard	●	●	●	●	●	●	●	●	●
MGAP12,16,20	Extended side stroke adjusting	–	–	–	●	–	–	●	–	–
MGAE12,16,20	Extended/retracted-side stroke adjusting	–	–	–	●	●	●	●	●	●
MGAG12,16,20	Cylinder with buffer	–	●	–	–	●	–	–	●	–
MGAPG12,16,20	Extended side stroke adjusting cylinder with buffer	–	–	–	–	–	–	–	–	–
MGAEG12,16,20	Extended/retracted-side stroke adjusting cylinder with buffer	–	–	–	–	●	–	–	●	–
MGAK12,16,20	Cylinder with end keep	●	–	–	●	–	–	●	–	–
MGAGK12,16,20	Cylinder with buffer end keep	–	–	–	–	–	–	–	–	–
MGAH12,16,20	Rear piping specifications	●	–	–	●	–	–	●	–	–
MGAGH12,16,20	Rear piping specification cylinder with buffer	–	–	–	–	–	–	–	–	–

● φ25 [0.984]～φ32 [1.260]

MGA [ ] [ ] [×] - [ ] - [ ] [ ] - [ ] [ ] - [ ] [ ] [ ]

Mini guide slider

Functions
Blank : Standard cylinder

Magnet and sensor rail
Blank : No magnet and sensor rail
S : With magnet and sensor rail

Bore size
×
Stroke
● See the bore size and stroke on p.14.

Piping direction
R : Right side as viewed from the rod side
L : Left side as viewed from the rod side

Stroke adjusting mechanism
Blank : No stroke adjusting mechanism [Note 1]
MS : With metal stopper [Note 1]
RS : With rubber stopper [Note 1]
SS : With shock absorber [Note 1]

Stroke adjusting position
Blank : No stroke adjustment
2 : Both ends (with two stroke adjustments) [Note 1]
F : Extended end (with one stroke adjustment) [Note 1]
R : Retracted end (with one stroke adjustment) [Note 1]

Locating pin
Blank : Without pin
P : With pin

Number of pins
1 : With one pin
2 : With two pins
3 : With three pins
4 : With four pins

Sensor switch type
Blank : No sensor switch
ZE135 : 2-lead wire, solid state type
ZE155 : 3-lead wire, solid state NPN output type
ZE175 : 3-lead wire, solid state PNP output type
ZE235 : 2-lead wire, solid state type
ZE255 : 3-lead wire, solid state NPN output type
ZE275 : 3-lead wire, solid state PNP output type
ZE101 : 2-lead wire, reed switch type
ZE102 : 2-lead wire, reed switch type
ZE201 : 2-lead wire, reed switch type
ZE202 : 2-lead wire, reed switch type
ZLS1 : Linear magnetic sensor, horizontal [Note 2]
ZLS2 : Linear magnetic sensor, vertical [Note 2]
● See p.172 for details of solid state type and reed switch type sensor switches and see p.178 for details of linear magnetic sensors.

Lead wire length
A : 1000 mm [39 in.]
B : 3000 mm [118 in.]
G : 300 mm [11.8 in.] with M8 connector, only for **ZE175** and **ZE275**

Number of sensor switches
1 : With one sensor switch
2 : With two sensor switches

Note 1: For details, see the Product Range and Optional Combinations below.
2: Comes with the controller (ZL1-C-3L).

● Mini Guide Sliders φ25, 32 [φ0.984, 1.260] Product Range and Optional Combinations

Model	Type	Metal stopper			Rubber stopper			Shock absorber		
		Extended end -MSF	Retracted end -MSR	Both ends -MS2	Extended end -RSF	Retracted end -RSR	Both ends -RS2	Extended end -SSF	Retracted end -SSR	Both ends -SS2
MGA25,32	Standard	●	●	●	●	●	●	●	●	●

■ Additional parts

● Sensor rail

S-MGA □

Applicable cylinder bore size × stroke

1 : 4.5×5, 10 (1 rail)
2 : 6×5, 10
8×5, 10
10×5, 10
3 : 6×15
4 : 6×20
8×15, 20
10×15, 20
5 : 6×25, 30
8×25, 30
10×25, 30
6 : 12×10, 15, 20
16×10, 15, 20
20×10, 15, 20
7 : 12×30, 40
16×30, 40
20×30, 40
8 : 12×50, 60
16×50, 60
20×50, 60
25×10, 20, 30, 40,50
32×10, 20, 30, 40,50
9 : 12×70, 80
16×70, 80
20×70, 80
10 : 10×40, 50
11 : 16×90, 100
20×90, 100, 120, 125
12 : 4.5×5, 10
13 : 25×60, 80, 100
32×60, 80, 100
14 : 25×130, 150
32×130, 150

S-MGA1

S-MGA2, 3, 4, 5, 6, 7, 8, 9, 10, 11, 12, 13, 14

● Magnet

M-MGA □

Applicable cylinder bore size

1 : 4.5
2 : 6, 8, 10
12, 16, 20
3 : 25, 32

● Locating pin

P-MGA □

Applicable cylinder bore size

1 : 4.5, 6, 8, 10
2 : 12, 16, 20, 25
3 : 32

Remark: For the dimensions of the additional parts (sensor rail, magnet, and locating pin), see p.143.

■ Additional parts

● Stopper and shock absorber

Bore size mm [in.]	Metal stopper type	Rubber stopper type	Shock absorber type
10 [0.394]	**CRK645**	**—**	**KSHJ4×3-02**
12 [0.472]	**CRK565**	**CRK570**	**KSHA4×4-BD**
16 [0.630]	**CRK566**	**CRK571**	**KSHA5×5-E**
20 [0.787]	**CRK567**	**CRK572**	**KSHA6×8-E**
25 [0.984]	**CRK717**	**CRK719**	**KSHJ12×6-01**
32 [1.260]	**CRK718**	**CRK720**	**KSHJ14×8-01**

Remark: The set includes a mounting nut.

Metal stopper

Rubber stopper

Shock absorber

Remark: For the dimensions of the metal stopper and rubber stopper, see p.143. For the specifications and dimensions of the shock absorber unit, see the General Catalog and Shock Absorber Catalog.

● Stroke adjusting bracket set Note

[ ] - MGA [ ]

Combination of bracket set

K2 : ①+②+③
KF : ①+②
KR : ①+③

Notes: • These sets do not include the shock absorber and stopper bolt.
• For the mounting combinations, see the Stroke Adjusting Bracket Set Compatibility Table below.
• When using the shock absorber, do not use the set screw.

Applicable cylinder bore size and stroke

Model	Applicable cylinder bore size × stroke
1	12×10,30,50,70
2	12×20,40,60,80
3	16×10,30,50,70
4	16×20,40,60,80
5	20×10,30,50,70
6	20×20,40,60,80
7	10×5,15,25
8	10×10,20,30
9	10×40
10	10×50
11	16×100
12	20×100
13	20×125
14	12×15
15	16×15
16	16×90
17	20×15
18	20×90
19	20×120
20	25×10,60
21	25×20
22	25×30,80,130
23	25×40
24	25×50,100,150
25	32×10,60,130
26	32×20
27	32×30,80,150
28	32×40
29	32×50,100

①Stopper

②Bracket A

③Bracket B

Stroke Adjusting Bracket Set Compatibility Table

φ10 [0.394]

	MGA	MGAP	MGAE	MGAL	MGAG	MGAH	MGAPG	MGAEG	MGALG	MGAGH
	Standard	Extended side stroke adjusting cylinder	Extended/retracted-side stroke adjusting cylinder	Side-mounted cylinder	Cylinder with buffer	Rear piping	Extended side stroke adjusting cylinder with buffer	Extended/retracted-side stroke adjusting cylinder with buffer	Side-mounted cylinder with buffer	Rear piping Cylinder with buffer
K2	○	—	—	—	—	—	—	—	—	—
KF	○	○	○	—	—	○	—	—	—	—
KR	○	—	—	—	○	—	—	—	—	—

φ12 [0.472], φ16 [0.630], φ20 [0.787]

	MGA	MGAP	MGAE	MGAG	MGAK	MGAH	MGAPG	MGAEG	MGAGK	MGAGH
	Standard	Extended side stroke adjusting cylinder	Extended/retracted-side stroke adjusting cylinder	Cylinder with buffer	Cylinder with end keep	Rear piping	Extended side stroke adjusting cylinder with buffer	Extended/retracted-side stroke adjusting cylinder with buffer	Cylinder with buffer end keep	Rear piping Cylinder with buffer
K2	○	—	—	—	—	—	—	—	—	—
KF	○	○	○	—	○	○	—	—	—	—
KR	○	—	—	○	—	—	—	—	—	—

φ25 [0.984], φ32 [1.260]

	MGA
	Standard
K2	○
KF	○
KR	○

Mass

● ϕ4.5 [0.177] to ϕ10 [0.394]

g [oz.]

Bore size mm [in.]	Stroke mm	Standard (MGA)	Extended side stroke adjusting cylinder (MGAP)	Extended/ retracted-side stroke adjusting cylinder (MGAE)	Side-mounted (MGAL)	Rear piping (MGAH)	Additional mass								
							Buffer	Magnet and sensor rail	Stroke adjusting bracket			Metal stopper (1 pc.)	Shock absorber (1 pc.)	Sensor switch (1 pc.)	
									-□S2	-□SF	-□SR			ZE□□□A ZE□□□G	ZE□□□B
4.5	5	42 [1.48]	49 [1.73]	52 [1.83]	59 [2.08]	47 [1.66]	3 [0.11]	4 [0.14], 5 [0.18] Note	—	—	—	—	—	15 [0.53]	35 [1.24]
[0.177]	10	42 [1.48]	49 [1.73]	52 [1.83]	59 [2.08]	47 [1.66]	3 [0.11]	4 [0.14], 5 [0.18] Note							
	5	58 [2.05]	68 [2.40]	71 [2.50]	78 [2.75]	64 [2.26]	4 [0.14]	5 [0.18]							
	10	58 [2.05]	68 [2.40]	71 [2.50]	78 [2.75]	64 [2.26]	4 [0.14]	5 [0.18]							
6	15	66 [2.33]	77 [2.72]	80 [2.82]	88 [3.10]	72 [2.54]	4 [0.14]	6 [0.21]							
[0.236]	20	74 [2.61]	86 [3.03]	89 [3.14]	98 [3.46]	81 [2.86]	4 [0.14]	6 [0.21]							
	25	90 [3.17]	104 [3.67]	107 [3.77]	118 [4.16]	98 [3.46]	4 [0.14]	7 [0.25]							
	30	90 [3.17]	104 [3.67]	107 [3.77]	118 [4.16]	98 [3.46]	4 [0.14]	7 [0.25]							
	5	83 [2.93]	97 [3.42]	100 [3.53]	106 [3.74]	90 [3.17]	5 [0.18]	5 [0.18]							
	10	83 [2.93]	97 [3.42]	100 [3.53]	106 [3.74]	90 [3.17]	5 [0.18]	5 [0.18]							
8	15	104 [3.67]	120 [4.23]	123 [4.34]	132 [4.66]	111 [3.92]	5 [0.18]	6 [0.21]							
[0.315]	20	104 [3.67]	120 [4.23]	123 [4.34]	132 [4.66]	111 [3.92]	5 [0.18]	6 [0.21]							
	25	125 [4.41]	143 [5.04]	146 [5.15]	158 [5.57]	134 [4.73]	5 [0.18]	7 [0.25]							
	30	125 [4.41]	143 [5.04]	146 [5.15]	158 [5.57]	134 [4.73]	5 [0.18]	7 [0.25]							
	5	103 [3.63]	126 [4.44]	129 [4.55]	132 [4.66]	110 [3.88]	6 [0.21]	5 [0.18]	16 [0.56]	9 [0.32]	13 [0.46]	3 [0.11]	3 [0.11]	15 [0.53]	35 [1.24]
	10	103 [3.63]	126 [4.44]	129 [4.55]	132 [4.66]	110 [3.88]	6 [0.21]	5 [0.18]	15 [0.53]	8 [0.28]	12 [0.42]				
	15	130 [4.59]	155 [5.47]	158 [5.57]	163 [5.75]	138 [4.87]	6 [0.21]	6 [0.21]	16 [0.56]	9 [0.32]	13 [0.46]				
10	20	130 [4.59]	155 [5.47]	158 [5.57]	163 [5.75]	138 [4.87]	6 [0.21]	6 [0.21]	15 [0.53]	8 [0.28]	12 [0.42]				
[0.394]	25	157 [5.54]	182 [6.42]	185 [6.53]	194 [6.84]	166 [5.86]	6 [0.21]	7 [0.25]	16 [0.56]	9 [0.32]	13 [0.46]				
	30	157 [5.54]	182 [6.42]	185 [6.53]	194 [6.84]	166 [5.86]	6 [0.21]	7 [0.25]	15 [0.53]	8 [0.28]	12 [0.42]				
	40	238 [8.40]	266 [9.38]	269 [9.49]	287 [10.12]	249 [8.78]	6 [0.21]	10 [0.35]	20 [0.71]	13 [0.46]	17 [0.60]				
	50	238 [8.40]	266 [9.38]	269 [9.49]	287 [10.12]	249 [8.78]	6 [0.21]	10 [0.35]	18 [0.63]	11 [0.39]	15 [0.53]				

Note: For SS (two sensor rails specification) cylinders

● ϕ12 [0.423] to ϕ20 [0.705]

g [oz.]

Bore size mm [in.]	Stroke mm	Standard (MGA)	Extended side stroke adjusting cylinder (MGAP)	Extended/ retracted-side stroke adjusting cylinder (MGAE)	Rear piping (MGAH)	Additional mass									
						Buffer	End keep (MGAK)	Magnet and sensor rail	Stroke adjusting bracket			Metal and rubber stopper (1 pc.)	Shock absorber (1 pc.)	Sensor switch (1 pc.)	
									-□S2	-□SF	-□SR			ZE□□□A ZE□□□G	ZE□□□B
	10	211 [7.44]	265 [9.35]	278 [9.81]	245 [8.64]	15 [0.53]	36 [1.27]	12 [0.42]	31 [1.09]	19 [0.67]	27 [0.95]	4 [0.14]	4 [0.14]	15 [0.53]	35 [1.24]
	15	211 [7.44]	265 [9.35]	278 [9.81]	245 [8.64]	15 [0.53]	36 [1.27]	12 [0.42]	29 [1.02]	17 [0.60]	25 [0.88]				
	20	211 [7.44]	265 [9.35]	278 [9.81]	245 [8.64]	15 [0.53]	36 [1.27]	12 [0.42]	27 [0.95]	15 [0.53]	23 [0.81]				
	30	283 [9.98]	340 [11.99]	353 [12.45]	320 [11.29]	15 [0.53]	36 [1.27]	17 [0.60]	31 [1.09]	19 [0.67]	27 [0.95]				
12	40	283 [9.98]	340 [11.99]	353 [12.45]	320 [11.29]	15 [0.53]	36 [1.27]	17 [0.60]	27 [0.95]	15 [0.53]	23 [0.81]				
[0.472]	50	355 [12.52]	415 [14.64]	428 [15.10]	395 [13.93]	15 [0.53]	36 [1.27]	22 [0.78]	31 [1.09]	19 [0.67]	27 [0.95]				
	60	355 [12.52]	415 [14.64]	428 [15.10]	395 [13.93]	15 [0.53]	36 [1.27]	22 [0.78]	27 [0.95]	15 [0.53]	23 [0.81]				
	70	427 [15.06]	490 [17.28]	503 [17.74]	470 [16.58]	15 [0.53]	36 [1.27]	27 [0.95]	31 [1.09]	19 [0.67]	27 [0.95]				
	80	427 [15.06]	490 [17.28]	503 [17.74]	470 [16.58]	15 [0.53]	36 [1.27]	27 [0.95]	27 [0.95]	15 [0.53]	23 [0.81]				
	10	328 [11.57]	437 [15.41]	451 [15.91]	375 [13.23]	20 [0.71]	50 [1.76]	12 [0.42]	60 [2.12]	35 [1.23]	52 [1.83]	8 [0.28]	7 [0.25]	15 [0.53]	35 [1.24]
	15	328 [11.57]	437 [15.41]	451 [15.91]	375 [13.23]	20 [0.71]	50 [1.76]	12 [0.42]	56 [1.98]	31 [1.09]	48 [1.69]				
	20	328 [11.57]	437 [15.41]	451 [15.91]	375 [13.23]	20 [0.71]	50 [1.76]	12 [0.42]	53 [1.87]	28 [0.99]	45 [1.59]				
	30	431 [15.20]	544 [19.19]	558 [19.68]	482 [17.00]	20 [0.71]	50 [1.76]	17 [0.60]	60 [2.12]	35 [1.23]	52 [1.83]				
16	40	431 [15.20]	544 [19.19]	558 [19.68]	482 [17.00]	20 [0.71]	50 [1.76]	17 [0.60]	53 [1.87]	28 [0.99]	45 [1.59]				
[0.630]	50	534 [18.84]	651 [22.96]	665 [23.46]	589 [20.78]	20 [0.71]	50 [1.76]	22 [0.78]	60 [2.12]	35 [1.23]	52 [1.83]				
	60	534 [18.84]	651 [22.96]	665 [23.46]	589 [20.78]	20 [0.71]	50 [1.76]	22 [0.78]	53 [1.87]	28 [0.99]	45 [1.59]				
	70	637 [22.47]	758 [26.74]	772 [27.23]	696 [24.55]	20 [0.71]	50 [1.76]	27 [0.95]	60 [2.12]	35 [1.23]	52 [1.83]				
	80	637 [22.47]	758 [26.74]	772 [27.23]	696 [24.55]	20 [0.71]	50 [1.76]	27 [0.95]	53 [1.87]	28 [0.99]	45 [1.59]				
	90	874 [30.83]	1003 [35.38]	1017 [35.87]	937 [33.05]	20 [0.71]	50 [1.76]	38 [1.34]	74 [2.61]	49 [1.73]	66 [2.33]				
	100	874 [30.83]	1003 [35.38]	1017 [35.87]	937 [33.05]	20 [0.71]	50 [1.76]	38 [1.34]	67 [2.36]	42 [1.48]	59 [2.08]				
	10	515 [18.17]	687 [24.23]	703 [24.80]	568 [20.04]	26 [0.92]	67 [2.36]	12 [0.42]	74 [2.61]	40 [1.41]	60 [2.12]	15 [0.53]	20 [0.71]	15 [0.53]	35 [1.24]
	15	515 [18.17]	687 [24.23]	703 [24.80]	568 [20.04]	26 [0.92]	67 [2.36]	12 [0.42]	70 [2.47]	36 [1.27]	56 [1.98]				
	20	515 [18.17]	687 [24.23]	703 [24.80]	568 [20.04]	26 [0.92]	67 [2.36]	12 [0.42]	67 [2.36]	33 [1.16]	53 [1.87]				
	30	659 [23.25]	838 [29.56]	854 [30.12]	717 [25.29]	26 [0.92]	67 [2.36]	17 [0.60]	74 [2.61]	40 [1.41]	60 [2.12]				
	40	659 [23.25]	838 [29.56]	854 [30.12]	717 [25.29]	26 [0.92]	67 [2.36]	17 [0.60]	67 [2.36]	33 [1.16]	53 [1.87]				
20	50	803 [28.32]	989 [34.89]	1005 [35.45]	866 [30.55]	26 [0.92]	67 [2.36]	22 [0.78]	74 [2.61]	40 [1.41]	60 [2.12]				
[0.787]	60	803 [28.32]	989 [34.89]	1005 [35.45]	866 [30.55]	26 [0.92]	67 [2.36]	22 [0.78]	67 [2.36]	33 [1.16]	53 [1.87]				
	70	947 [33.40]	1140 [40.21]	1156 [40.78]	1015 [35.80]	26 [0.92]	67 [2.36]	27 [0.95]	74 [2.61]	40 [1.41]	60 [2.12]				
	80	947 [33.40]	1140 [40.21]	1156 [40.78]	1015 [35.80]	26 [0.92]	67 [2.36]	27 [0.95]	67 [2.36]	33 [1.16]	53 [1.87]				
	90	1466 [51.71]	1719 [60.64]	1735 [61.20]	1569 [55.34]	26 [0.92]	67 [2.36]	38 [1.34]	106 [3.74]	72 [2.54]	92 [3.25]				
	100	1466 [51.71]	1719 [60.64]	1735 [61.20]	1569 [55.34]	26 [0.92]	67 [2.36]	38 [1.34]	99 [3.49]	65 [2.29]	85 [3.00]				
	120	1466 [51.71]	1719 [60.64]	1735 [61.20]	1569 [55.34]	26 [0.92]	67 [2.36]	38 [1.34]	84 [2.96]	51 [1.80]	71 [2.50]				
	125	1466 [51.71]	1719 [60.64]	1735 [61.20]	1569 [55.34]	26 [0.92]	67 [2.36]	38 [1.34]	81 [2.86]	47 [1.66]	67 [2.36]				

Remark: For the mass of the linear magnetic sensor controller, see p.178.

● φ25 [0.984] to φ32 [1.260]

g [oz.]

Bore size mm [in.]	Stroke mm	Standard (MGA)	Additional mass							
			Magnet and sensor rail	Stroke adjusting bracket			Metal and rubber stopper (1 pc.)	Shock absorber (1 pc.)	Sensor switch (1 pc.)	
				-□S2	-□SF	-□SR			ZE□□□A ZE□□□G	ZE□□□B
25 [0.984]	10	1394 [49.17]	22 [0.78]	198 [6.98]	122 [4.30]	177 [6.24]	30 [1.06]	31 [1.09]	15 [0.53]	35 [1.23]
	20	1394 [49.17]	22 [0.78]	185 [6.53]	109 [3.84]	164 [5.78]				
	30	1394 [49.17]	22 [0.78]	172 [6.07]	96 [3.39]	151 [5.33]				
	40	1394 [49.17]	22 [0.78]	159 [5.61]	83 [2.93]	138 [4.87]				
	50	1394 [49.17]	22 [0.78]	146 [5.15]	70 [2.47]	125 [4.41]				
	60	1928 [68.01]	25 [0.88]	198 [6.98]	122 [4.30]	177 [6.24]				
	80	1928 [68.01]	25 [0.88]	172 [6.07]	96 [3.39]	151 [5.33]				
	100	1928 [68.01]	25 [0.88]	146 [5.15]	70 [2.47]	125 [4.41]				
	130	2462 [86.84]	28 [0.99]	172 [6.07]	96 [3.39]	151 [5.33]				
	150	2462 [86.84]	28 [0.99]	146 [5.15]	70 [2.47]	125 [4.41]				
32 [1.260]	10	2306 [81.34]	22 [0.78]	321 [11.32]	195 [6.88]	286 [10.09]	41 [1.45]	55 [1.94]	15 [0.53]	35 [1.23]
	20	2306 [81.34]	22 [0.78]	302 [10.65]	176 [6.21]	267 [9.42]				
	30	2306 [81.34]	22 [0.78]	283 [9.98]	157 [5.54]	248 [8.75]				
	40	2306 [81.34]	22 [0.78]	264 [9.31]	138 [4.87]	229 [8.08]				
	50	2306 [81.34]	22 [0.78]	245 [8.64]	119 [4.20]	210 [7.41]				
	60	3139 [110.72]	25 [0.88]	321 [11.32]	195 [6.88]	286 [10.09]				
	80	3139 [110.72]	25 [0.88]	283 [9.98]	157 [5.54]	248 [8.75]				
	100	3139 [110.72]	25 [0.88]	245 [8.64]	119 [4.20]	210 [7.41]				
	130	4306 [151.89]	28 [0.99]	321 [11.32]	195 [6.88]	286 [10.09]				
	150	4306 [151.89]	28 [0.99]	283 [9.98]	157 [5.54]	248 [8.75]				

Inner Construction (Standard Cylinder)

MGA□4.5

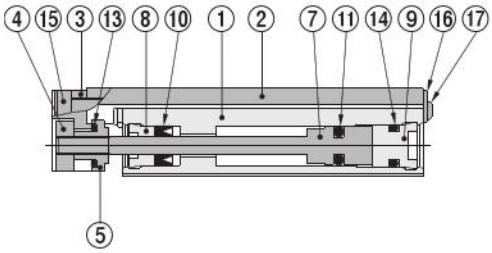

MGA□6, 8

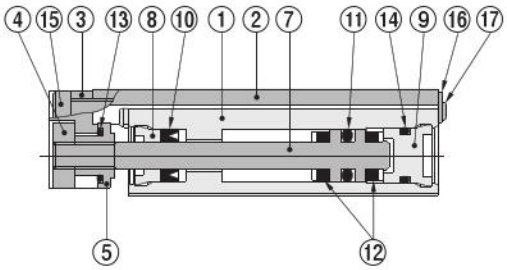

MGA□10～□20

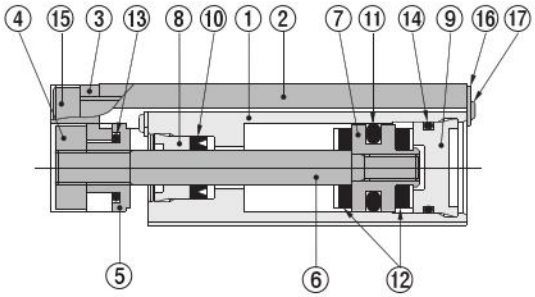

MGAS□ (with magnet and sensor rail)

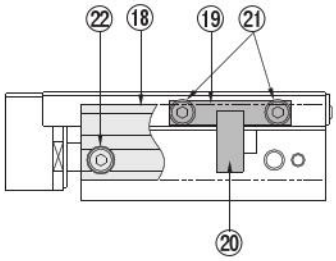

MGA□25～□32

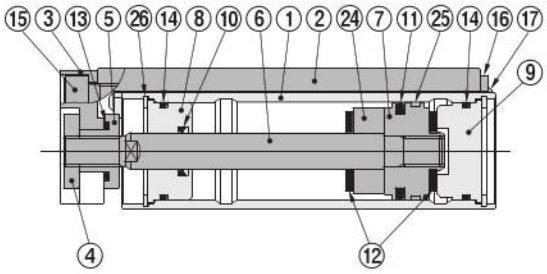

Locating pin ㉓ →

MGA□10～□32 (with shock absorber)

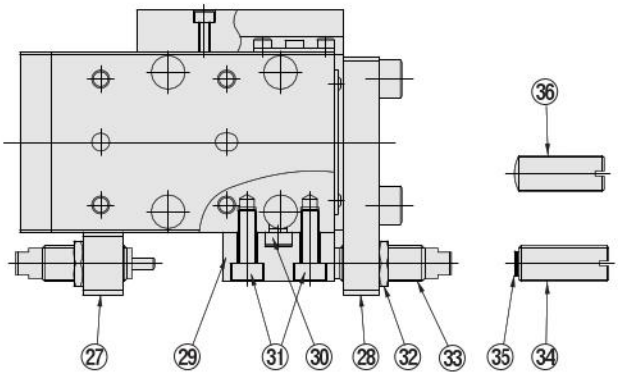

Major Parts and Materials

No.	Parts \ Model	MGA□4.5	MGA□6	MGA□8	MGA□10～□20	MGA□25～□32
①	Body	Stainless steel (heat treated)				
②	Table	Stainless steel (heat treated)				
③	Plate	Aluminum alloy (special wear-resistance treated)				Stainless steel
④	Nut A	Stainless steel				
⑤	Nut B	Stainless steel				
⑥	Piston rod	—			Stainless steel	
⑦	Piston Note	Stainless steel			Aluminum alloy (special rust prevention treated)	Aluminum alloy (anodized)
⑧	Rod cap	Oil impregnated plastic bushing (polyacetal)				Aluminum alloy (special wear-resistance treated)
⑨	Head cap	Plastic				Aluminum alloy (anodized)
⑩	Rod seal	Synthetic rubber (NBR)				
⑪	Piston seal	Synthetic rubber (NBR)				
⑫	Bumper	—	Synthetic rubber (urethane) / NBR for ϕ20 [0.705], ϕ25 [0.984], ϕ32 [1.260]			
⑬	O-ring	Synthetic rubber (NBR)				
⑭	O-ring	Synthetic rubber (NBR)				
⑮	Screw	Stainless steel				
⑯	Holder plate	Stainless steel				
⑰	Screw	Stainless steel				
⑱	Sensor rail	Aluminum alloy (anodized)				
⑲	Magnet holder	Aluminum alloy (anodized)				
⑳	Magnet	Plastic magnet				
㉑	Screw	Stainless steel				
㉒	Screw	Stainless steel				
㉓	Locating pin	Steel (heat treated)				

Note: In **MGA□4.5, MGA□6** and **MGA□8,** the piston and piston rod are combined as single-piece construction.

No.	Parts \ Model	MGA□25～□32
㉔	Collar	Aluminum alloy (anodized)
㉕	Wear ring	Plastic
㉖	Snap ring	Steel (nickel plated)

No.	Parts \ Model	MGA□10～□32
㉗	Bracket A	Aluminum alloy (anodized)
㉘	Bracket B	Aluminum alloy (anodized)
㉙	Stopper	Steel (heat treated and nickel plated)
㉚	Locating pin	Steel (heat treated)
㉛	Screw	Stainless steel
㉜	Nut	Mild steel (zinc plated) / Stainless steel for ϕ10 [0.394] / Mild steel (nickel plated) for ϕ25 [0.984]
㉝	Shock absorber	—
㉞	Adjusting bolt	Steel (nickel plated)
㉟	Bumper	Synthetic rubber (NBR) / Synthetic rubber (urethane) for ϕ32 [1.260]
㊱	Adjusting bolt	Steel (heat treated and nickel plated) / Stainless steel (heat treated) for ϕ10 [0.394]

Inner Construction (Extended Side Stroke Adjusting Cylinder)

MGAP□4.5

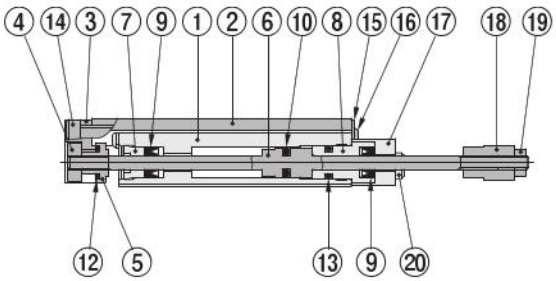

MGAP□6, 8, 10

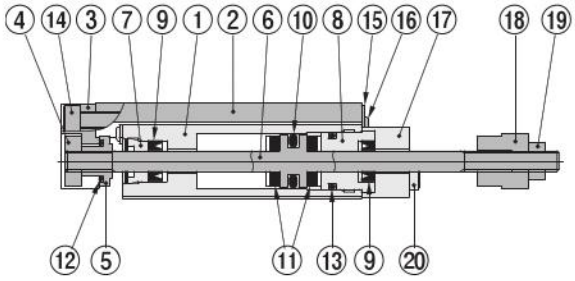

MGAP□12, 16, 20

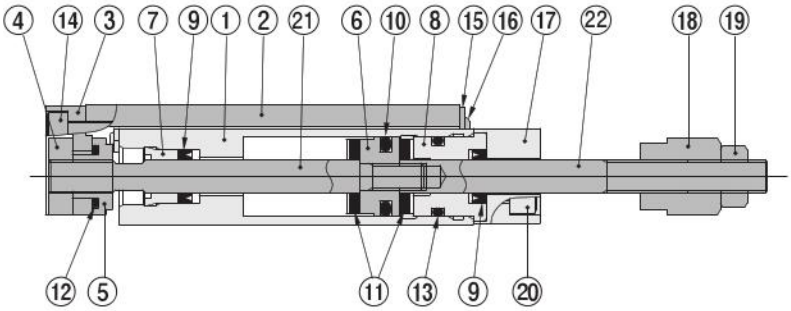

MGAPS□ (with magnet and sensor rail)

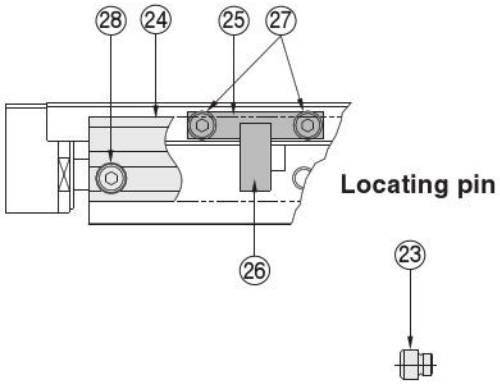

Major Parts and Materials

No.	Parts \ Model	MGAP□4.5	MGAP□6	MGAP□8	MGAP□10	MGAP□12	MGAP□16	MGAP□20
①	Body	Stainless steel (heat treated)						
②	Table	Stainless steel (heat treated)						
③	Plate	Aluminum alloy (special wear-resistance treated)						
④	Nut A	Stainless steel						
⑤	Nut B	Stainless stee						
⑥	Piston	Stainless steel				Aluminum alloy (special rust prevention treated)		
⑦	Rod cap	Oil impregnated plastic bushing (polyacetal)						
⑧	Head cap	Aluminum alloy (special wear-resistance treated)						
⑨	Rod seal	Synthetic rubber (NBR)						
⑩	Piston seal	Synthetic rubber (NBR)						
⑪	Bumper	—	Synthetic rubber (urethane)					Synthetic rubber (NBR)
⑫	O-ring	Synthetic rubber (NBR)						
⑬	O-ring	Synthetic rubber (NBR)						
⑭	Screw	Stainless steel						
⑮	Holder plate	Stainless steel						
⑯	Screw	Stainless steel						
⑰	Stopper	Steel (heat treated and nickel plated)						
⑱	Adjusting nut	Steel (heat treated and nickel plated)						
⑲	Hexagon nut	Stainless steel	Mild steel (nickel plated)			Stainless steel		
⑳	Screw	Stainless steel						
㉑	Piston rod	—				Stainless steel		
㉒	Adjusting rod	—				Stainless steel		
㉓	Locating pin	Steel (heat treated)						
㉔	Sensor rail	Aluminum alloy (anodized)						
㉕	Magnet holder	Aluminum alloy (anodized)						
㉖	Magnet	Plastic magnet						
㉗	Screw	Stainless steel						
㉘	Screw	Stainless steel						

Inner Construction (Extended/Retraced Side Stroke Adjusting Cylinder)

MGAE□4.5

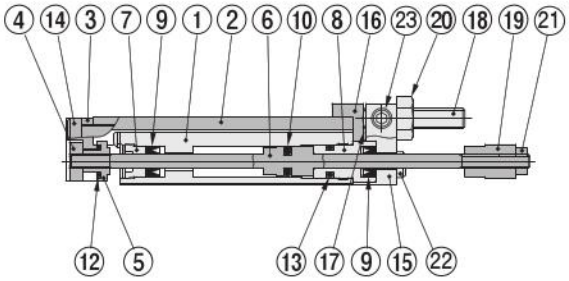

MGAE□6, 8, 10

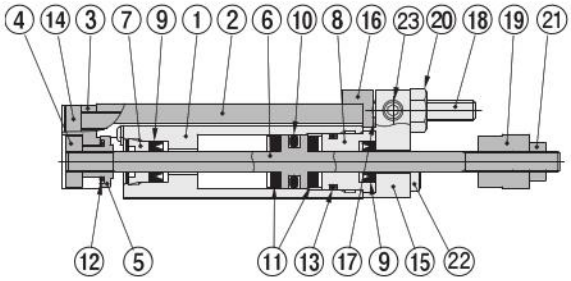

MGAE□12, 16, 20

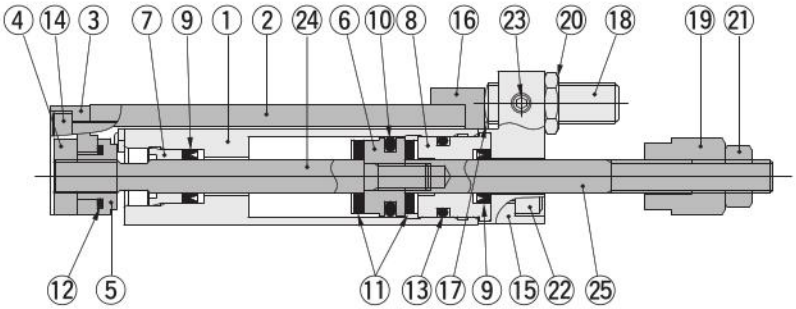

MGAES□ (with magnet and sensor rail)

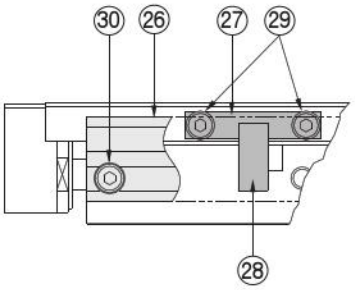

Locating pin

Major Parts and Materials

No.	Parts \ Model	MGAE□4.5	MGAE□6	MGAE□8	MGAE□10	MGAE□12	MGAE□16	MGAE□20
①	Body	Stainless steel (heat treated)						
②	Table	Stainless steel (heat treated)						
③	Plate	Aluminum alloy (special wear-resistance treated)						
④	Nut A	Stainless steel						
⑤	Nut B	Stainless steel						
⑥	Piston	Stainless steel				Aluminum alloy (special rust prevention treated)		
⑦	Rod cap	Oil impregnated plastic bushing (polyacetal)						
⑧	Head cap	Aluminum alloy (special wear-resistance treated)						
⑨	Rod seal	Synthetic rubber (NBR)						
⑩	Piston seal	Synthetic rubber (NBR)						
⑪	Bumper	—	Synthetic rubber (urethane)					Synthetic rubber (NBR)
⑫	O-ring	Synthetic rubber (NBR)						
⑬	O-ring	Synthetic rubber (NBR)						
⑭	Screw	Stainless steel						
⑮	Stopper A	Steel (heat treated and nickel plated)						
⑯	Stopper B	Steel (heat treated and nickel plated)						
⑰	Screw	Stainless steel						
⑱	Stopper bolt	Stainless steel (heat treated)				Steel (heat treated and nickel plated)		
⑲	Adjusting nut	Steel (heat treated and nickel plated)						
⑳	Hexagon nut	Stainless steel				Mild steel (zinc plated)		
㉑	Hexagon nut	Stainless steel	Mild steel (nickel plated)			Stainless steel		
㉒	Screw	Stainless steel						
㉓	Screw	Stainless steel						
㉔	Piston rod	—				Stainless steel		
㉕	Adjusting rod	—				Stainless steel		
㉖	Sensor rail	Aluminum alloy (anodized)						
㉗	Magnet holder	Aluminum alloy (anodized)						
㉘	Magnet	Plastic magnet						
㉙	Screw	Stainless steel						
㉚	Screw	Stainless steel						
㉛	Locating pin	Steel (heat treated)						

Inner Construction (Side-mounted Cylinder)

MGAL□4.5

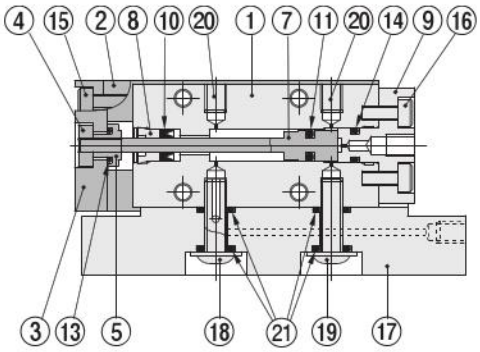

MGAL□6, 8

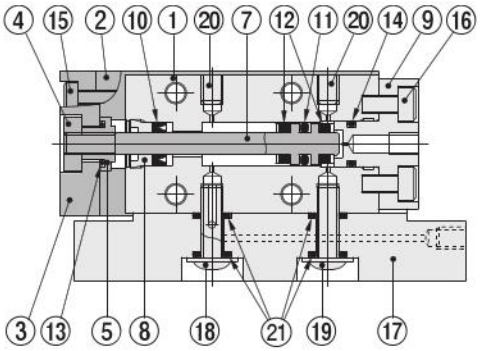

MGAL□10

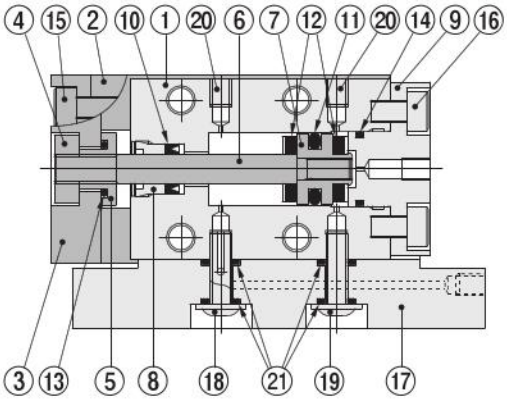

MGALS□ (with magnet and sensor rail)

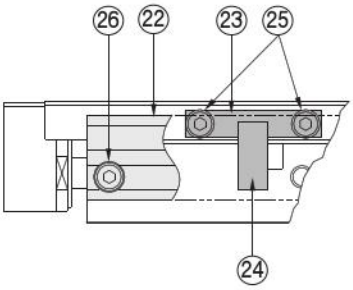

Locating pin

Major Parts and Materials

No.	Parts \ Model	MGAL□4.5	MGAL□6	MGAL□8	MGAL□10
①	Body	Stainless steel (heat treated)			
②	Table	Stainless steel (heat treated)			
③	Plate	Aluminum alloy (special wear-resistance treated)			
④	Nut A	Stainless steel			
⑤	Nut B	Stainless steel			
⑥	Piston rod	—			Stainless steel
⑦	Piston Note	Stainless steel			Aluminum alloy (special rust prevention treated)
⑧	Rod cap	Oil impregnated plastic bushing (polyacetal)			
⑨	Head cap	Aluminum alloy (anodized)			
⑩	Rod seal	Synthetic rubber (NBR)			
⑪	Piston seal	Synthetic rubber (NBR)			
⑫	Bumper	—	Synthetic rubber (urethane)		
⑬	O-ring	Synthetic rubber (NBR)			
⑭	O-ring	Synthetic rubber (NBR)			
⑮	Screw	Stainless steel			
⑯	Screw	Stainless steel			
⑰	Base	Aluminum alloy (anodized)			
⑱	Screw	Stainless steel			
⑲	Screw	Stainless steel			
⑳	Screw	Stainless steel			
㉑	O-ring	Synthetic rubber (NBR)			
㉒	Sensor rail	Aluminum alloy (anodized)			
㉓	Magnet holder	Aluminum alloy (anodized)			
㉔	Magnet	Plastic magnet			
㉕	Screw	Stainless steel			
㉖	Screw	Stainless steel			
㉗	Locating pin	Steel (heat treated)			

Note: In **MGAL□4.5, MGAL□6** and **MGAL□8,** the piston and piston rod are combined as single-piece construction.

Inner Construction (Cylinder with Buffer End Keep)

Note: The drawings show cylinder with buffer end keep.

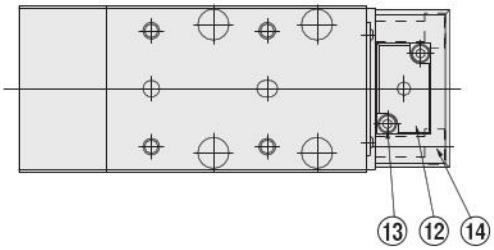

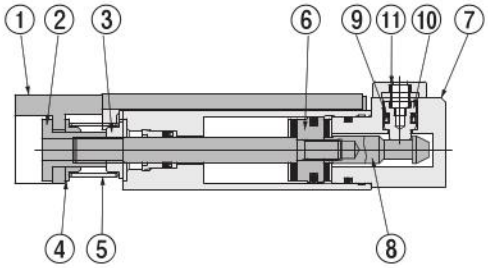

Major Parts and Materials

No.	Model / Parts	Cylinder with buffer MGAG□4.5~□20	Cylinder with buffer end keep MGAGK□12~□20	Cylinder with end keep MGAK□12~□20
①	Body	Aluminum alloy (special wear-resistance treated)		—
②	Nut A	Stainless steel		—
③	Nut B	Stainless steel		—
④	Support	Copper alloy		—
⑤	Spring	Stainless steel		—
⑥	Piston	—	Aluminum alloy (special rust prevention treated)	
⑦	Head cover	—	Aluminum alloy (anodized)	
⑧	Lock end	—	Stainless steel	
⑨	Piston seal	—	Synthetic rubber (NBR)	
⑩	Lock piston	—	Stainless steel	
⑪	Spring	—	Stainless steel	
⑫	Cover	—	Aluminum alloy (anodized)	
⑬	Screw	—	Stainless steel	
⑭	Screw	—	Stainless steel	

Inner Construction (Rear Piping Specifications)

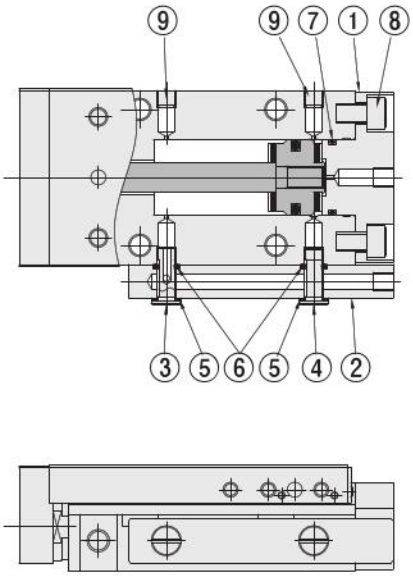

Major Parts and Materials

No.	Model / Parts	MGAH□4.5 to □20
①	Head cap	Aluminum alloy (anodized)
②	Piping block	Aluminum alloy (anodized)
③	Screw	Stainless steel
④	Screw	Stainless steel
⑤	Gasket	Synthetic rubber (NBR) thermally bonded onto stainless steel
⑥	O-ring	Synthetic rubber (NBR)
⑦	O-ring	Synthetic rubber (NBR)
⑧	Screw	Stainless steel
⑨	Screw	Stainless steel

● Standard cylinder

MGA□4.5

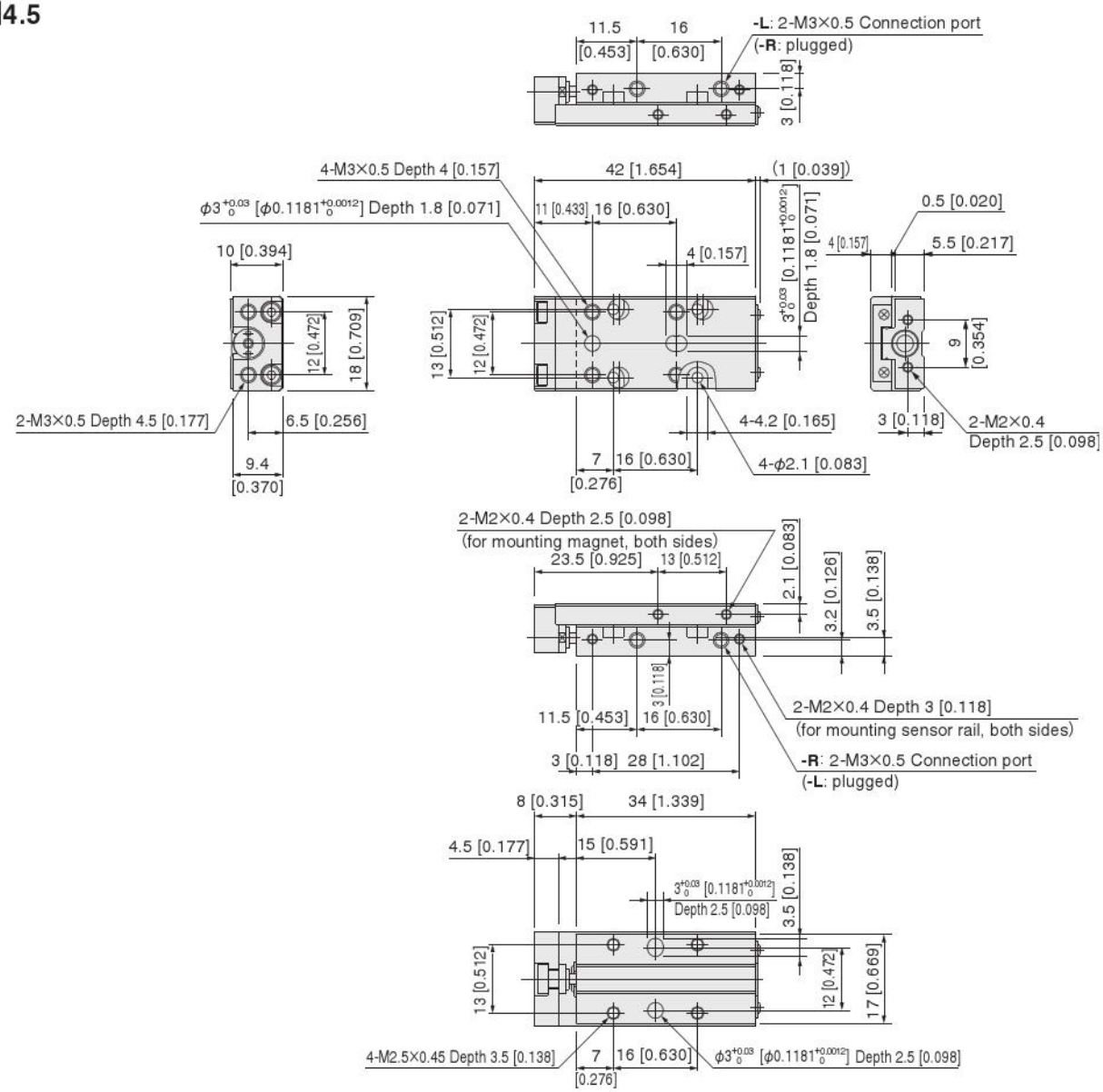

When magnet and sensor rail installed (Piping direction: -R)

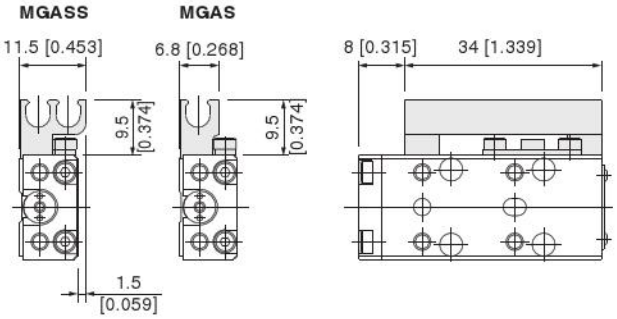

Locating pin: -P (P-MGA1)

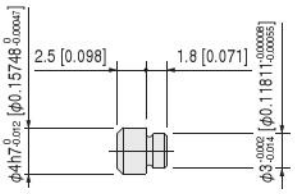

When magnet and sensor rail installed (Piping direction: -L)

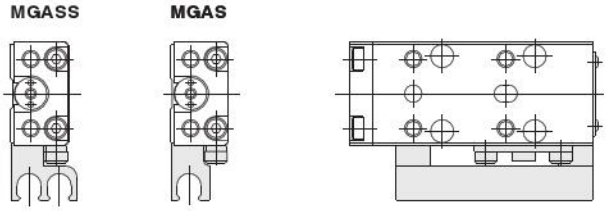

● Extended side stroke adjusting cylinder

MGAP□4.5

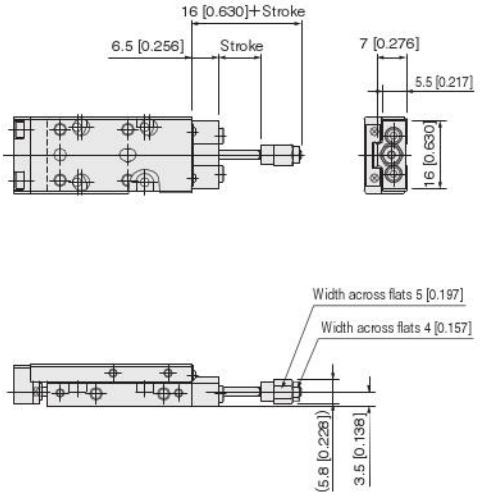

● Extended/retracted-side stroke adjusting cylinder

MGAE□4.5

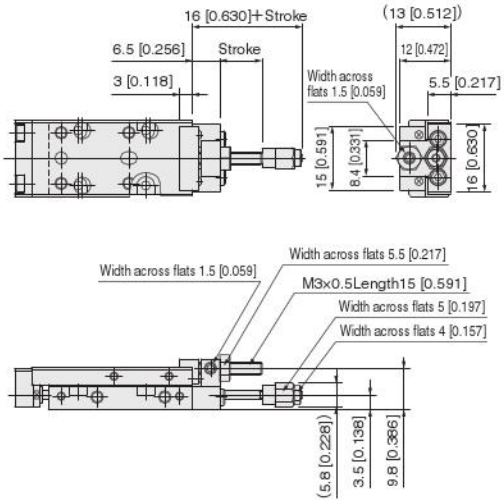

Note: For dimensions not shown in the above, see p.35.

● Cylinder with buffer

MGAG□4.5

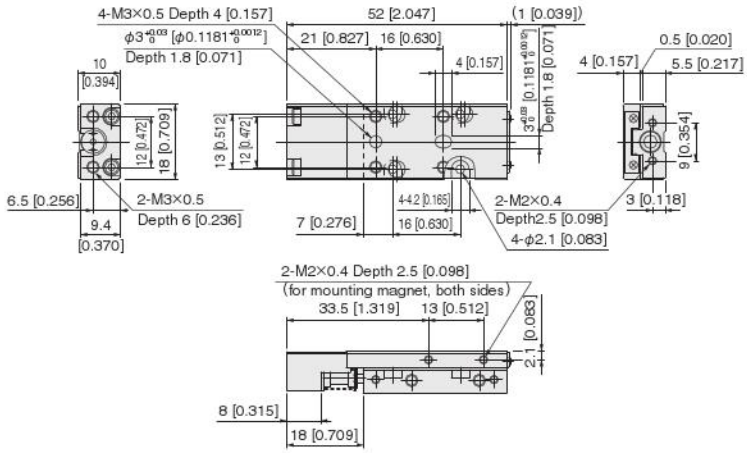

● Extended side stroke adjusting cylinder with buffer

MGAPG□4.5

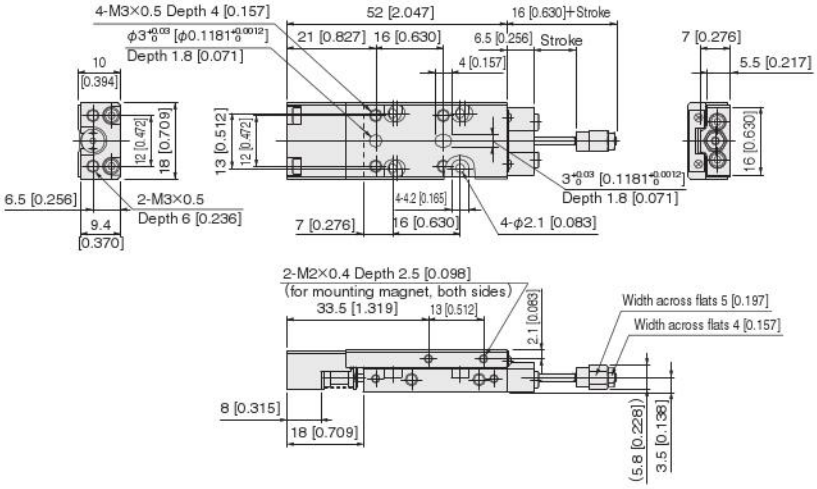

● Extended/retracted-side stroke adjusting cylinder with buffer

MGAEG□4.5

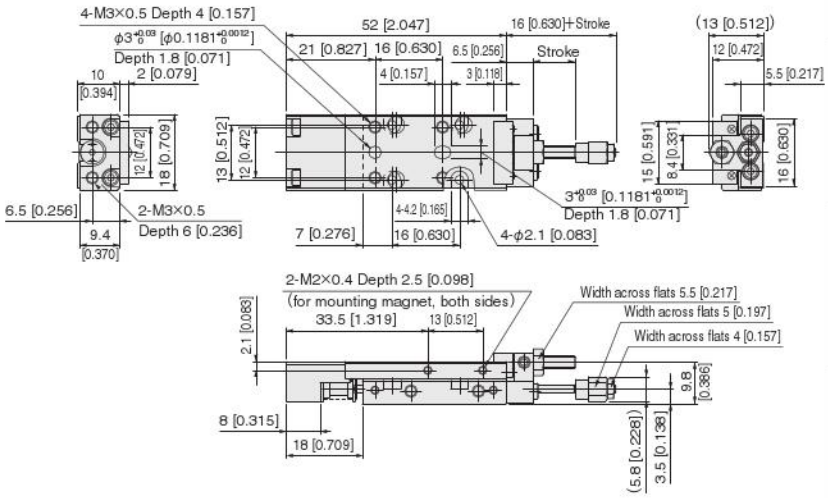

Remark: The buffer stroke of ϕ4.5 [0.177] cylinder with buffer is a maximum of 4 mm [0.157 in.].

Dimensions of Bore Size ϕ4.5 [0.177] mm [in.]

● Side-mounted cylinder (right side)

MGAL□4.5×Stroke-R

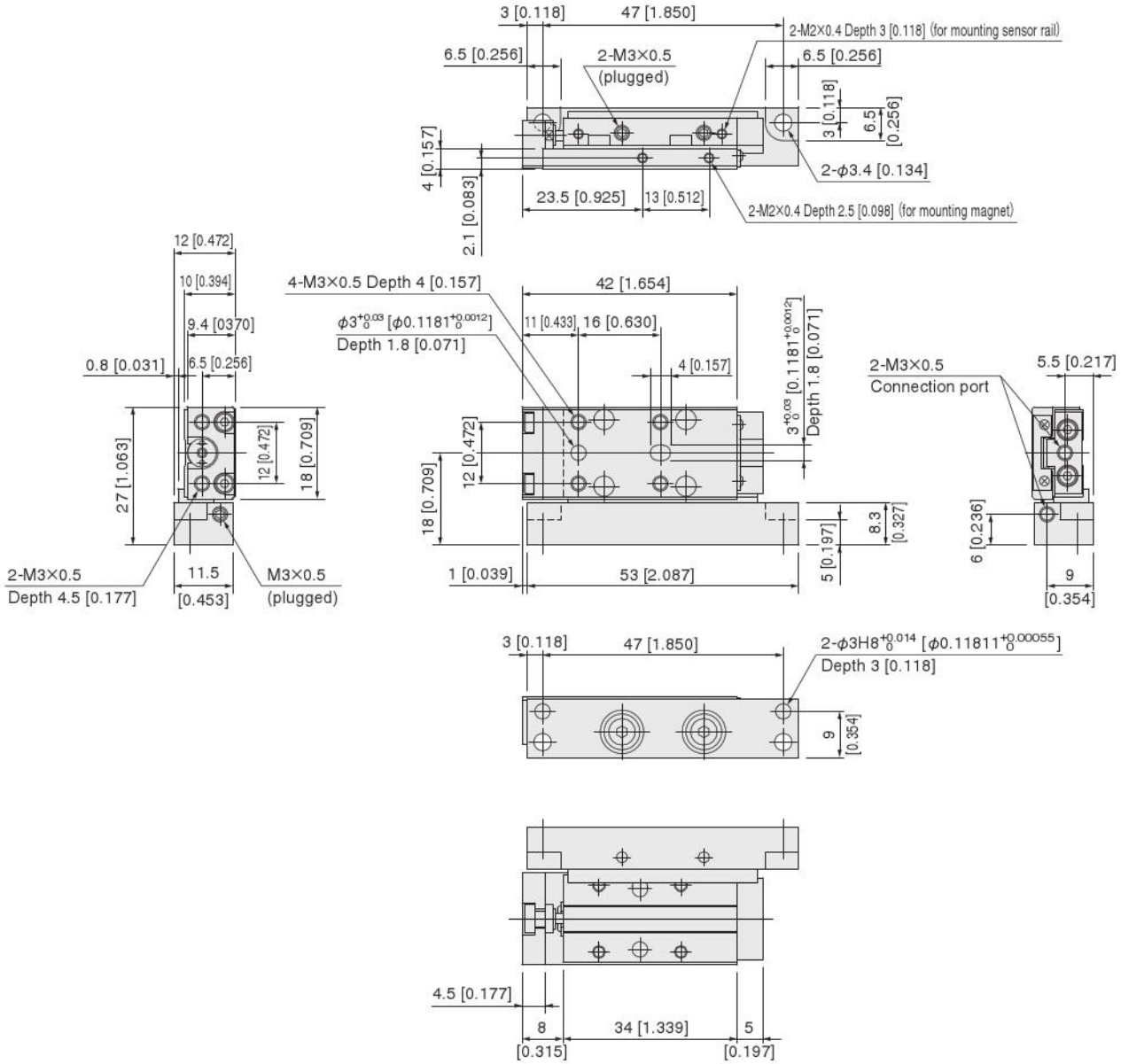

When magnet and sensor rail installed

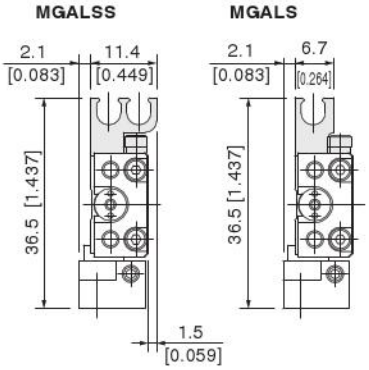

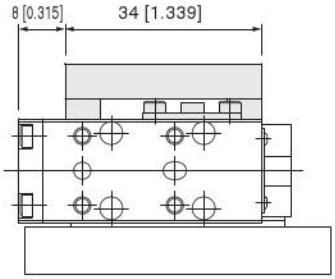

Locating pin: -P (P-MGA1)

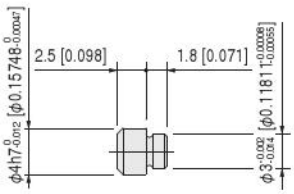

● **Side-mounted cylinder (left side)**

MGAL□4.5×Stroke-L

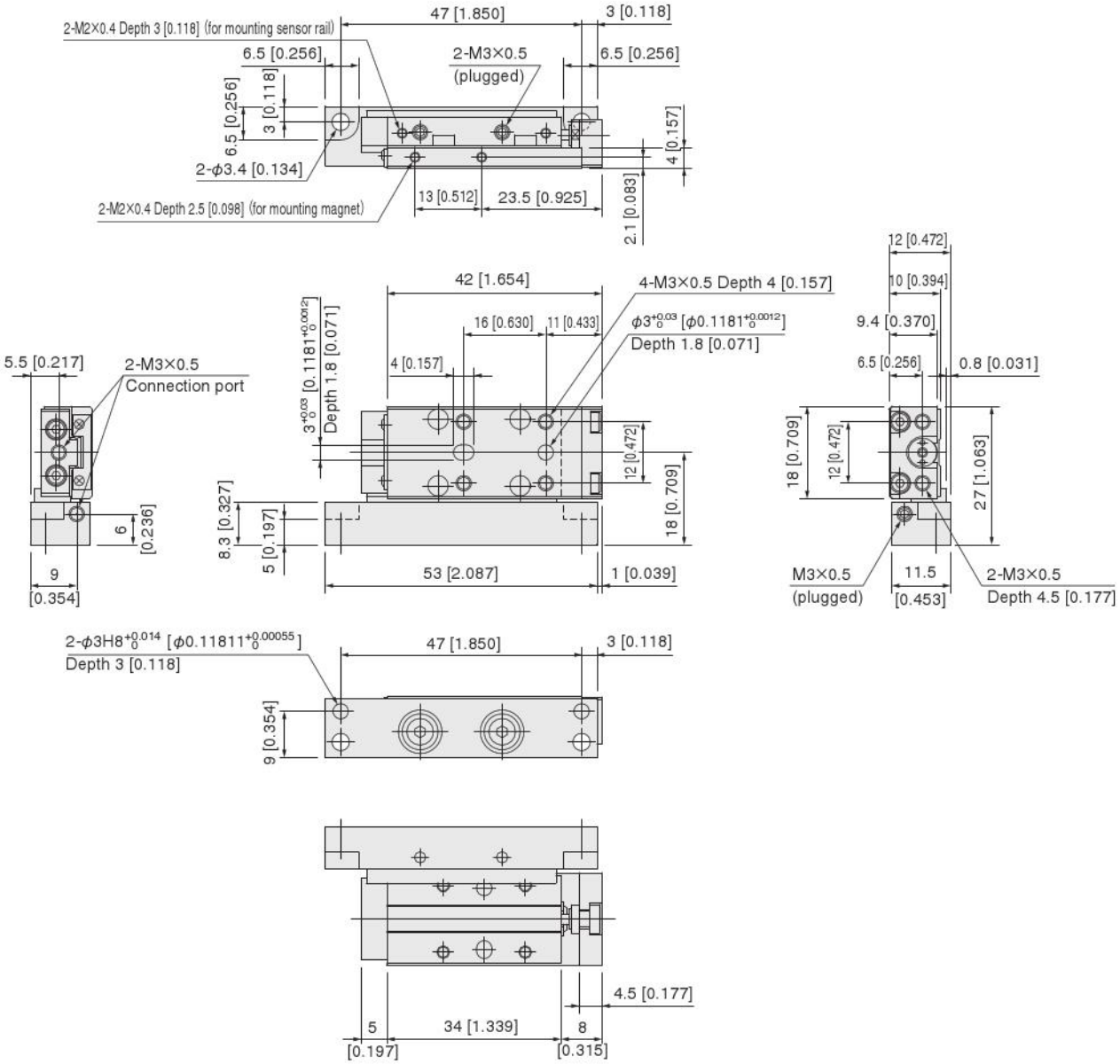

In the case of magnet and sensor rail installed

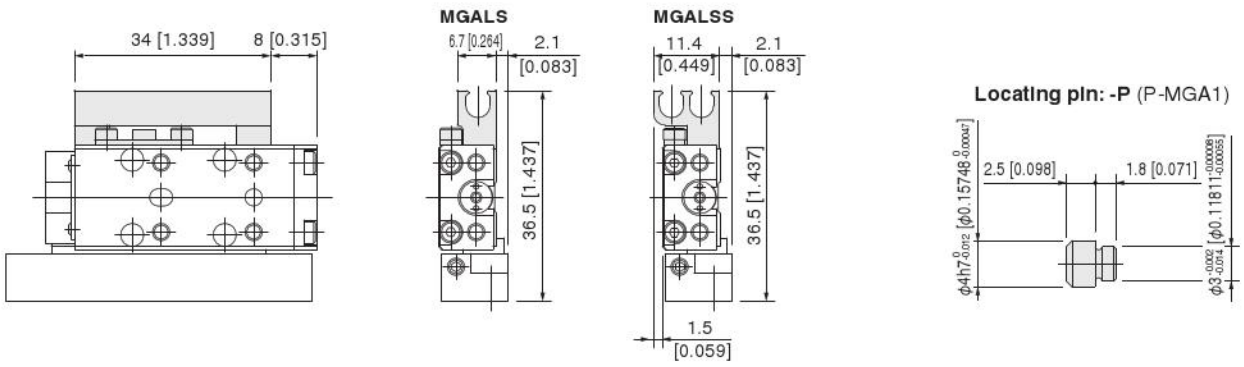

● Side-mounted cylinder with buffer (right side)

MGALG□4.5×Stroke-R

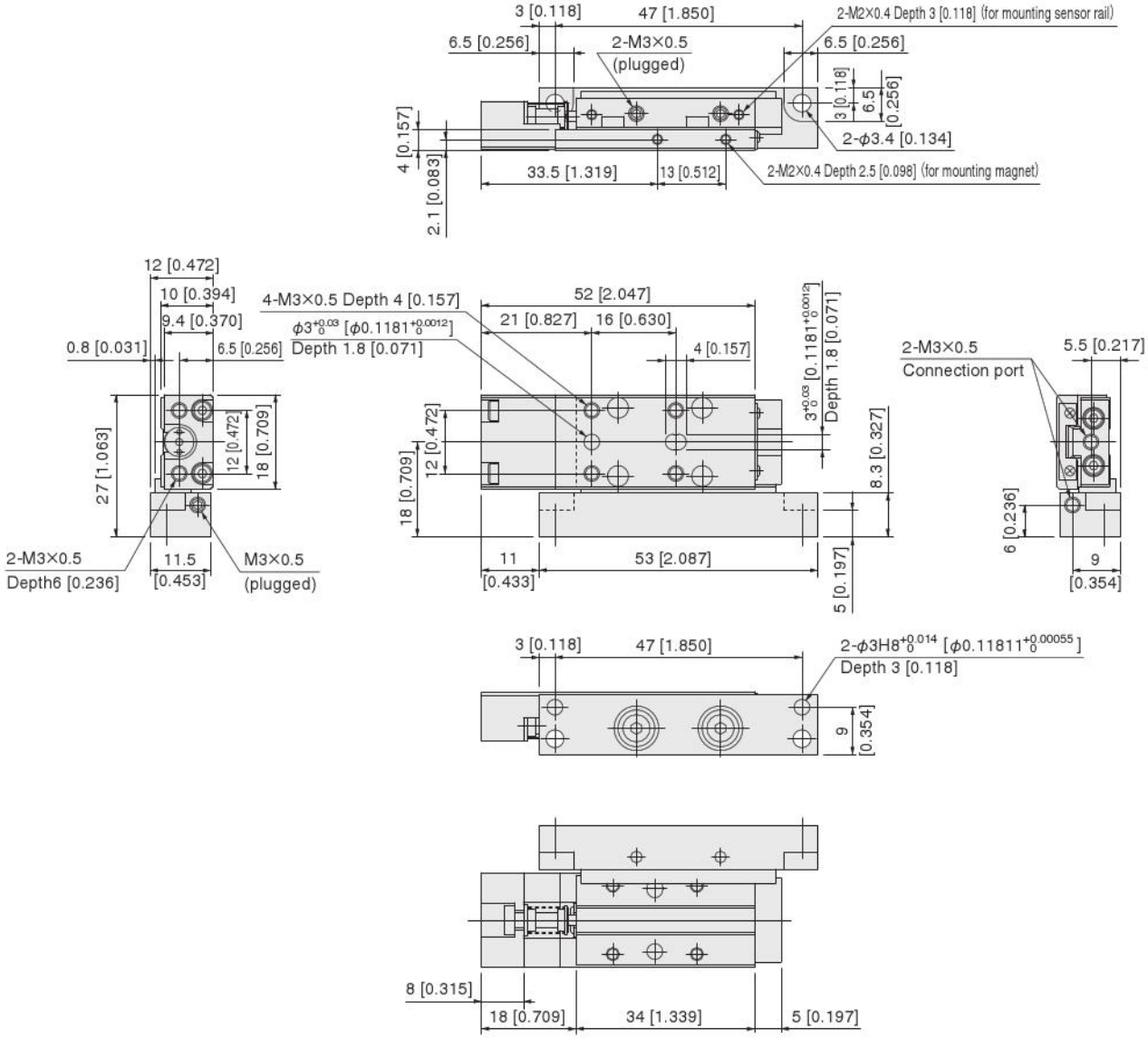

In the case of magnet and sensor rail installed

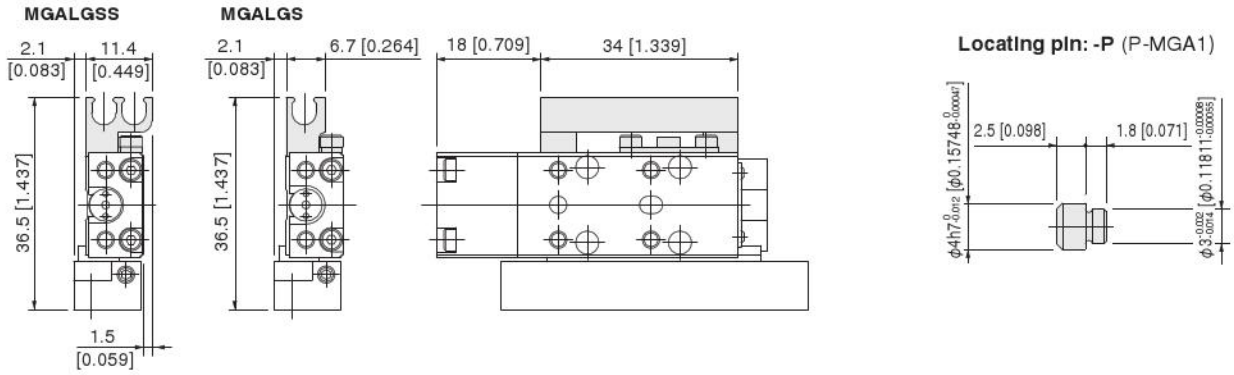

Remark: The buffer stroke of ϕ4.5 [0.177] cylinder with buffer is a maximum of 4 mm [0.157 in.].

● **Side-mounted cylinder with buffer (left side)**

MGALG□4.5×Stroke-L

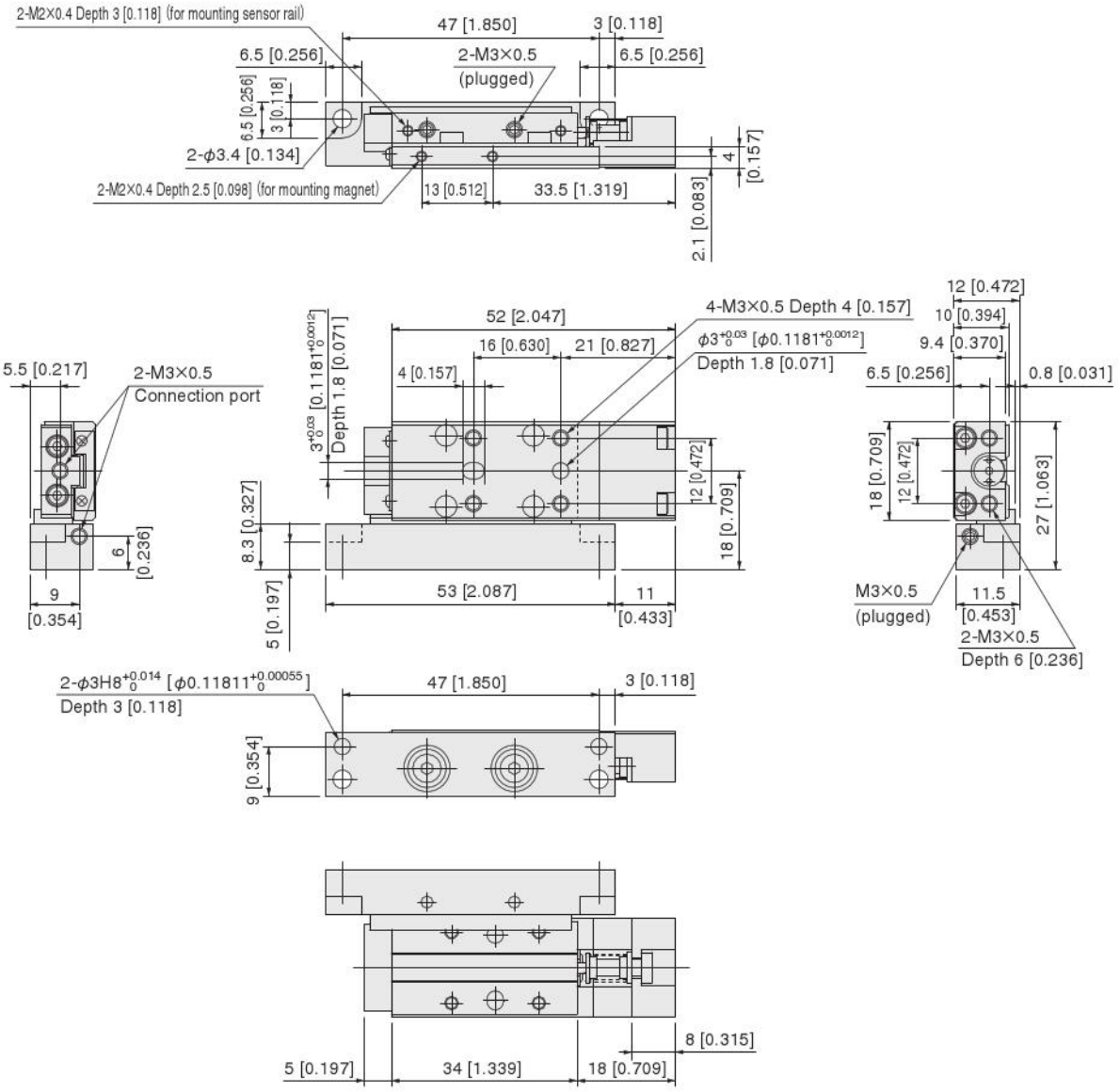

In the case of magnet and sensor rail installed

Locating pin: -P (P-MGA1)

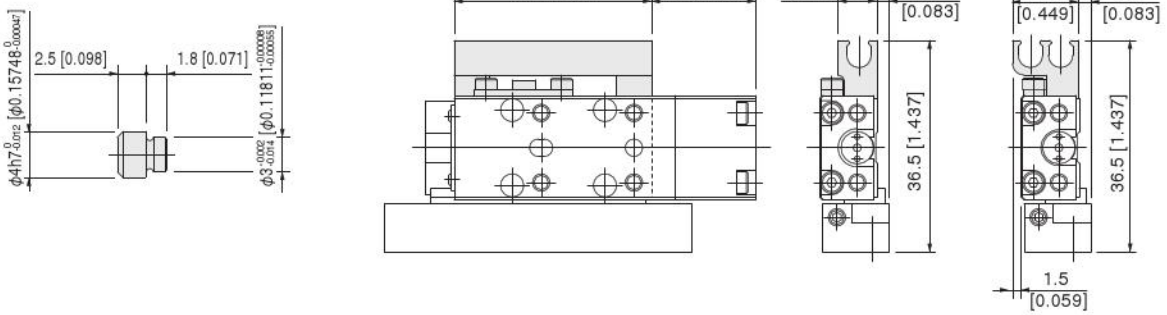

Remark: The buffer stroke of ϕ4.5 [0.177] cylinder with buffer is a maximum of 4 mm [0.157 in.].

●Standard cylinder, rear piping specifications

Piping direction: -R

MGAH□4.5

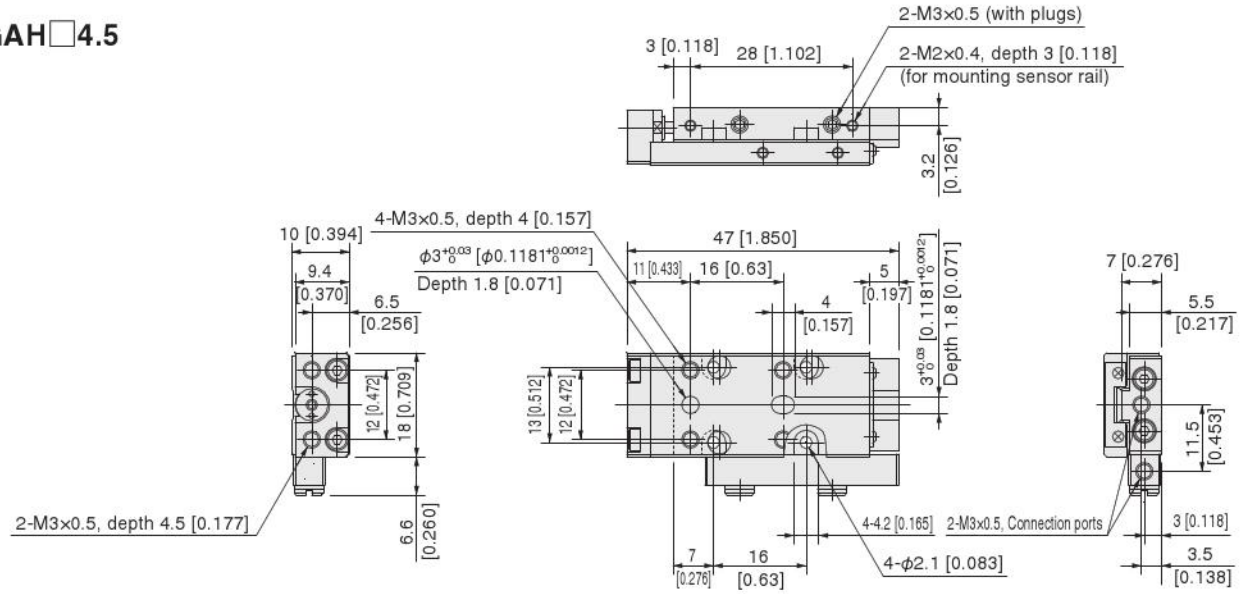

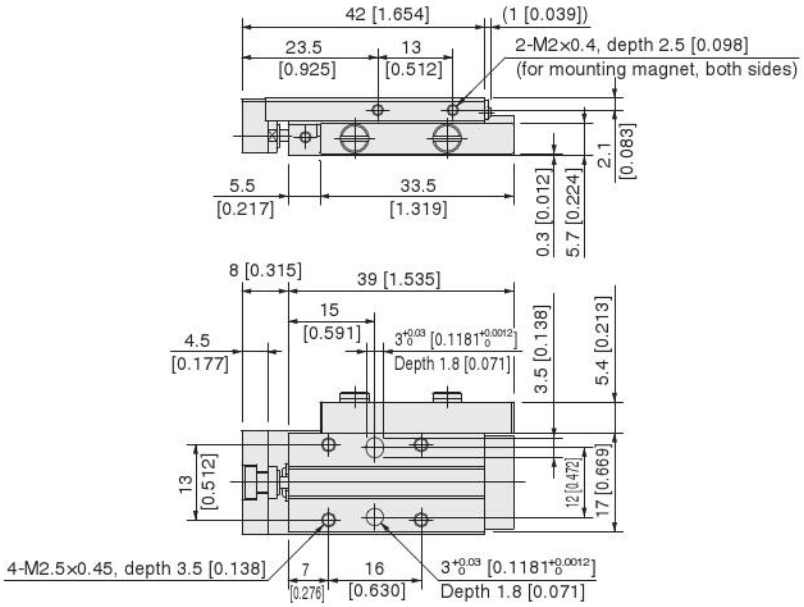

When magnet and sensor rail installed (Piping direction: -R)

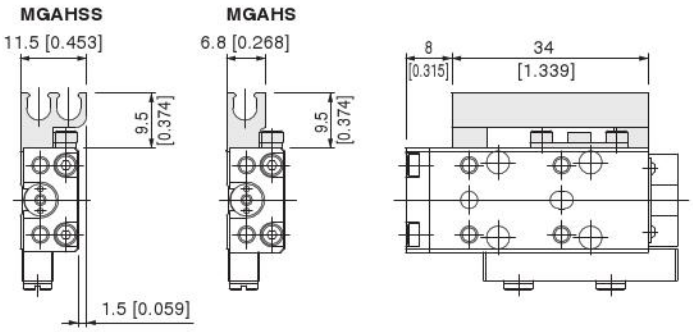

When magnet and sensor rail installed (Piping direction: -L)

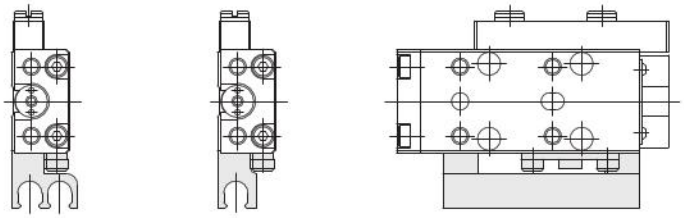

Locating pin: -P (P-MGA1)

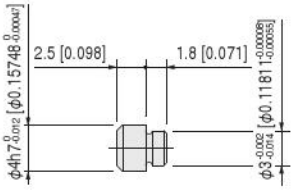

● **Cylinder with buffer, rear piping specifications**

Piping direction: -R

MGAGH□4.5

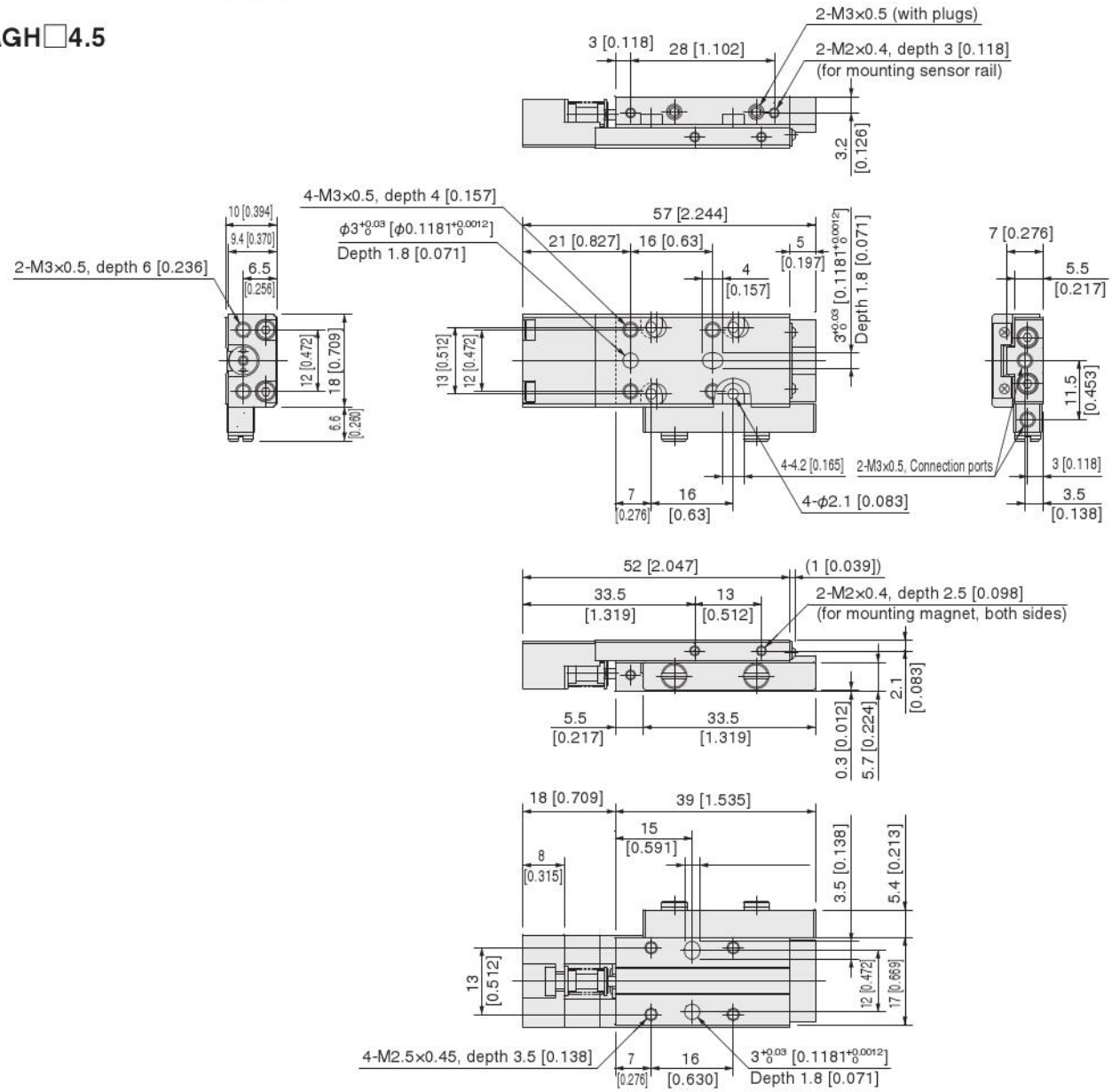

When magnet and sensor rail installed (Piping direction: -R)

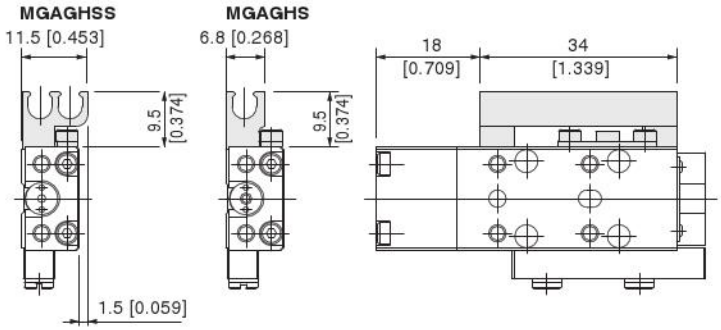

When magnet and sensor rail installed (Piping direction: -L)

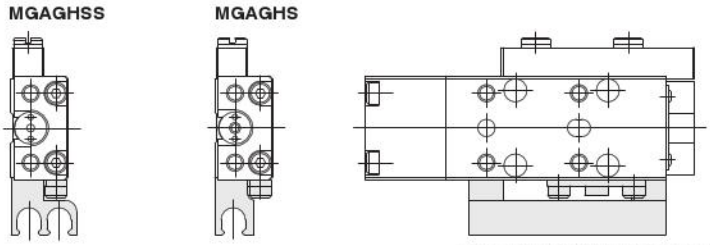

Locating pin: -P (P-MGA1)

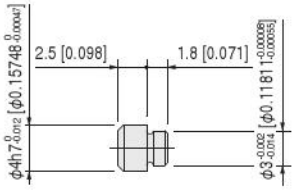

Remark: The buffer stroke of the ϕ4.5 [0.177] cylinder with buffer is a maximum of 4 mm [0.157 in.].

● Standard cylinder

MGA□6

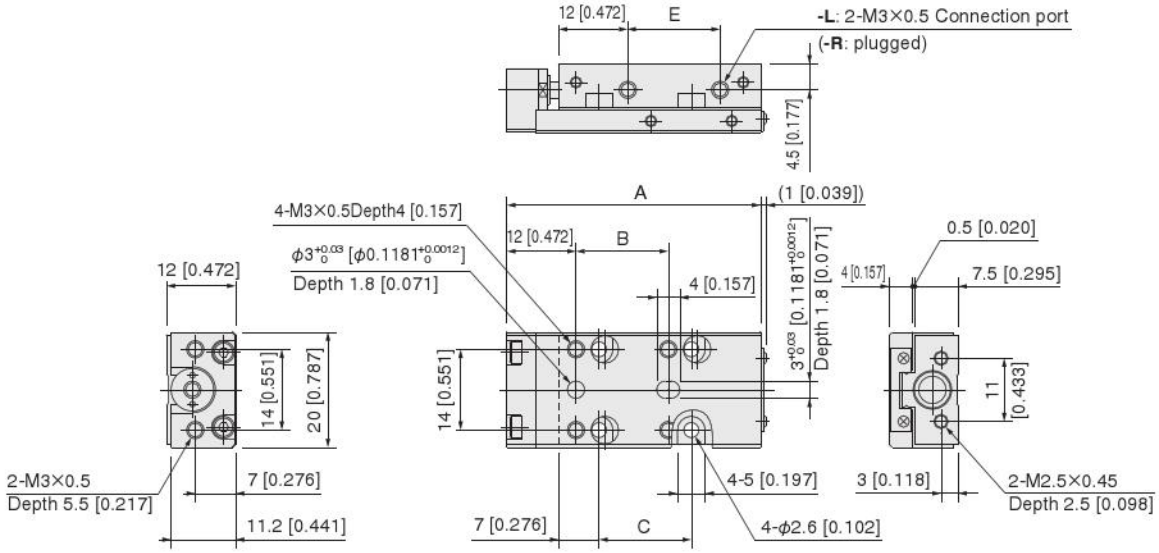

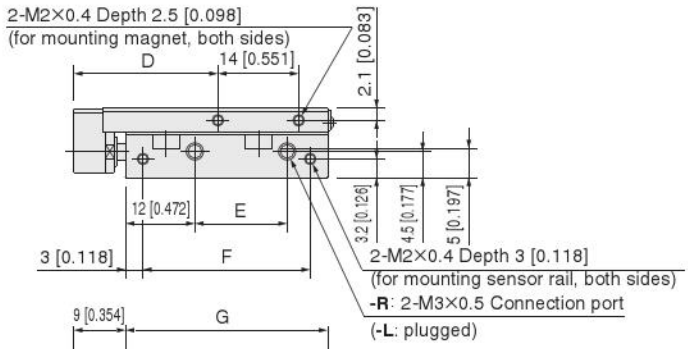

In the case of magnet and sensor rail installed (Piping direction: -R)

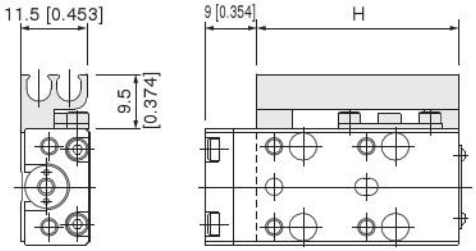

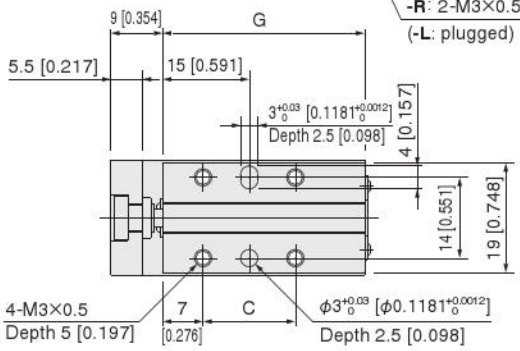

In the case of magnet and sensor rail installed (Piping direction: -L)

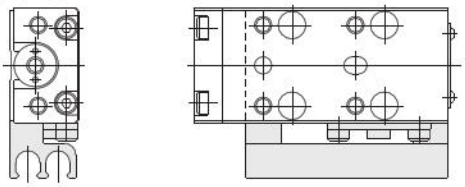

Locating pin: -P (P-MGA1)

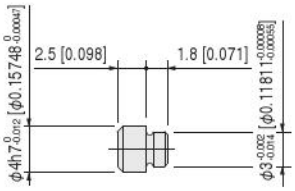

Stroke	A	B	C	D	E	F	G	H
5, 10	44 [1.732]	16 [0.630]	16 [0.630]	25 [0.984]	16 [0.630]	29 [1.142]	35 [1.378]	35 [1.378]
15	49 [1.929]	21 [0.827]	21 [0.827]	30 [1.181]	21 [0.827]	34 [1.339]	40 [1.575]	40 [1.575]
20	54 [2.126]	26 [1.024]	26 [1.024]	35 [1.378]	26 [1.024]	39 [1.535]	45 [1.772]	45 [1.772]
25, 30	64 [2.520]	36 [1.417]	36 [1.417]	45 [1.772]	36 [1.417]	49 [1.929]	55 [2.165]	55 [2.165]

● Extended side stroke adjusting cylinder

MGAP□6

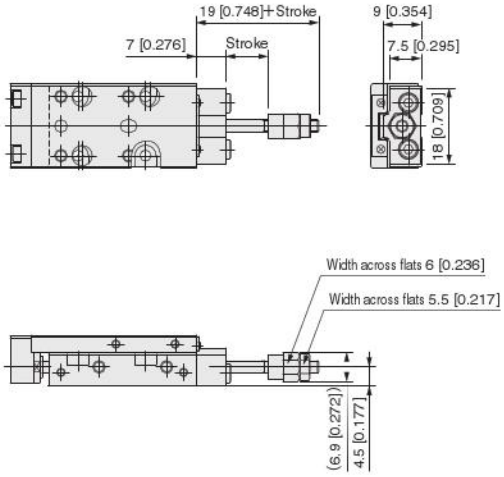

● Extended/retracted-side stroke adjusting cylinder

MGAE□6

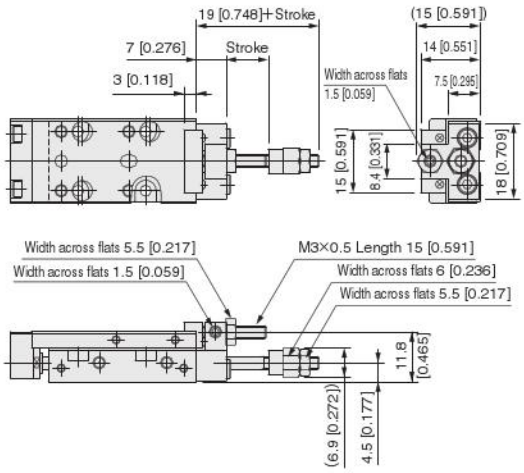

Note: For dimensions not shown in the above, see p.43.

Stroke	A	B	C	D
5, 10	54 [2.126]	16 [0.630]	16 [0.630]	35 [1.378]
15	59 [2.323]	21 [0.827]	21 [0.827]	40 [1.575]
20	64 [2.520]	26 [1.024]	26 [1.024]	45 [1.772]
25, 30	74 [2.913]	36 [1.417]	36 [1.417]	55 [2.165]

● Cylinder with buffer

MGAG□6

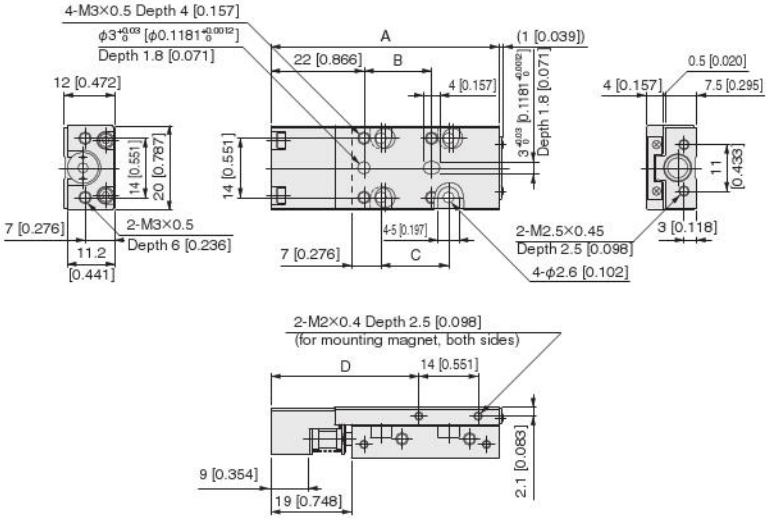

● Extended side stroke adjusting cylinder with buffer

MGAPG□6

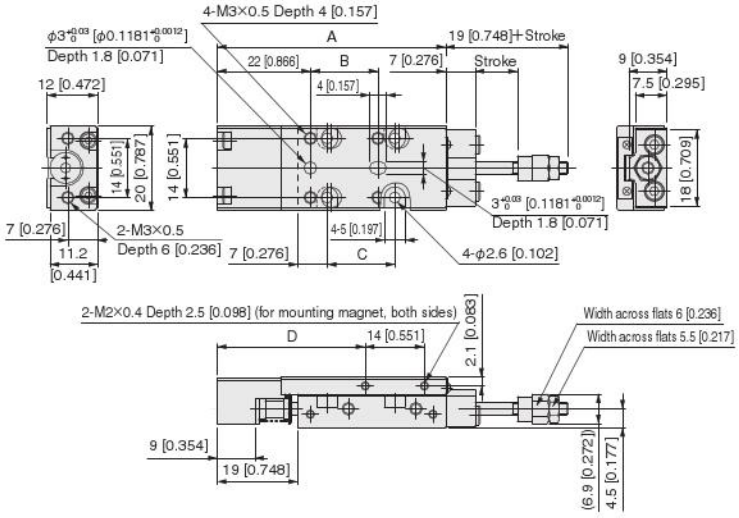

● Extended/retracted-side stroke adjusting cylinder with buffer

MGAEG□6

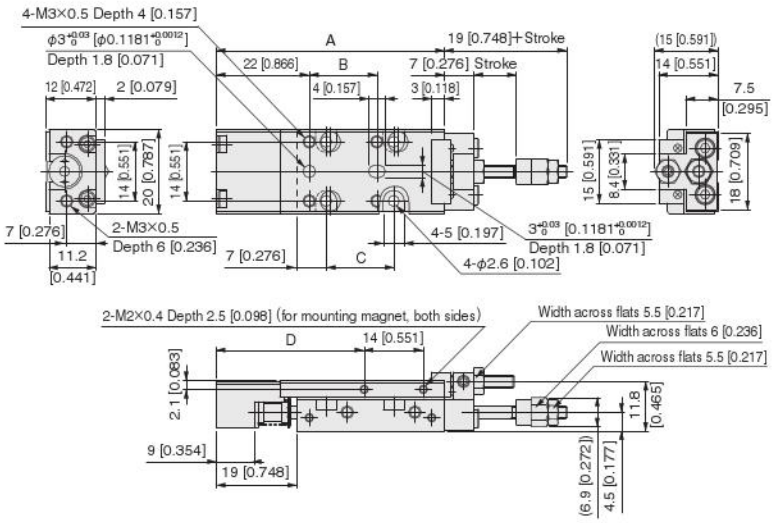

Remark: The buffer stroke of ϕ6 [0.236] cylinder with buffer is a maximum of 4 mm [0.157 in.].

● Side-mounted cylinder (right side)

MGAL□6×Stroke-R

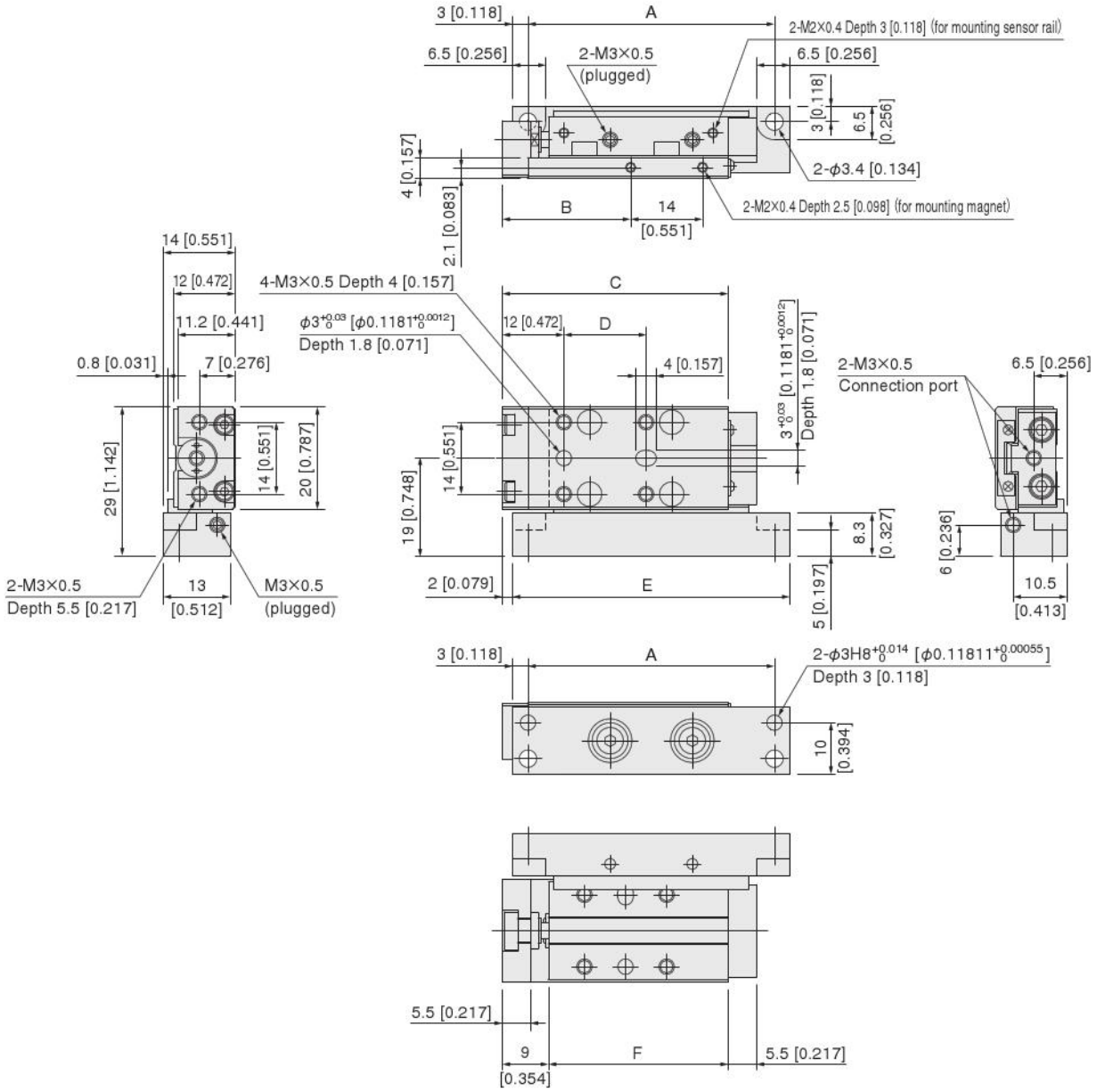

In the case of magnet and sensor rail installed

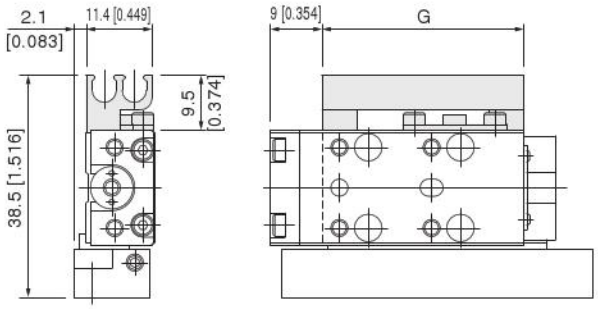

Locating pin: -P (P-MGA1)

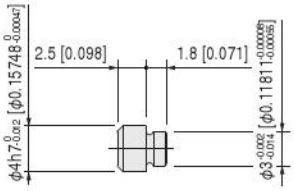

Stroke	A	B	C	D	E	F	G
5, 10	48 [1.890]	25 [0.984]	44 [1.732]	16 [0.630]	54 [2.126]	35 [1.378]	35 [1.378]
15	53 [2.087]	30 [1.181]	49 [1.929]	21 [0.827]	59 [2.323]	40 [1.575]	40 [1.575]
20	58 [2.283]	35 [1.378]	54 [2.126]	26 [1.024]	64 [2.520]	45 [1.772]	45 [1.772]
25, 30	68 [2.677]	45 [1.772]	64 [2.520]	36 [1.417]	74 [2.913]	55 [2.165]	55 [2.165]

● Side-mounted cylinder (left side)

MGAL□6×Stroke-L

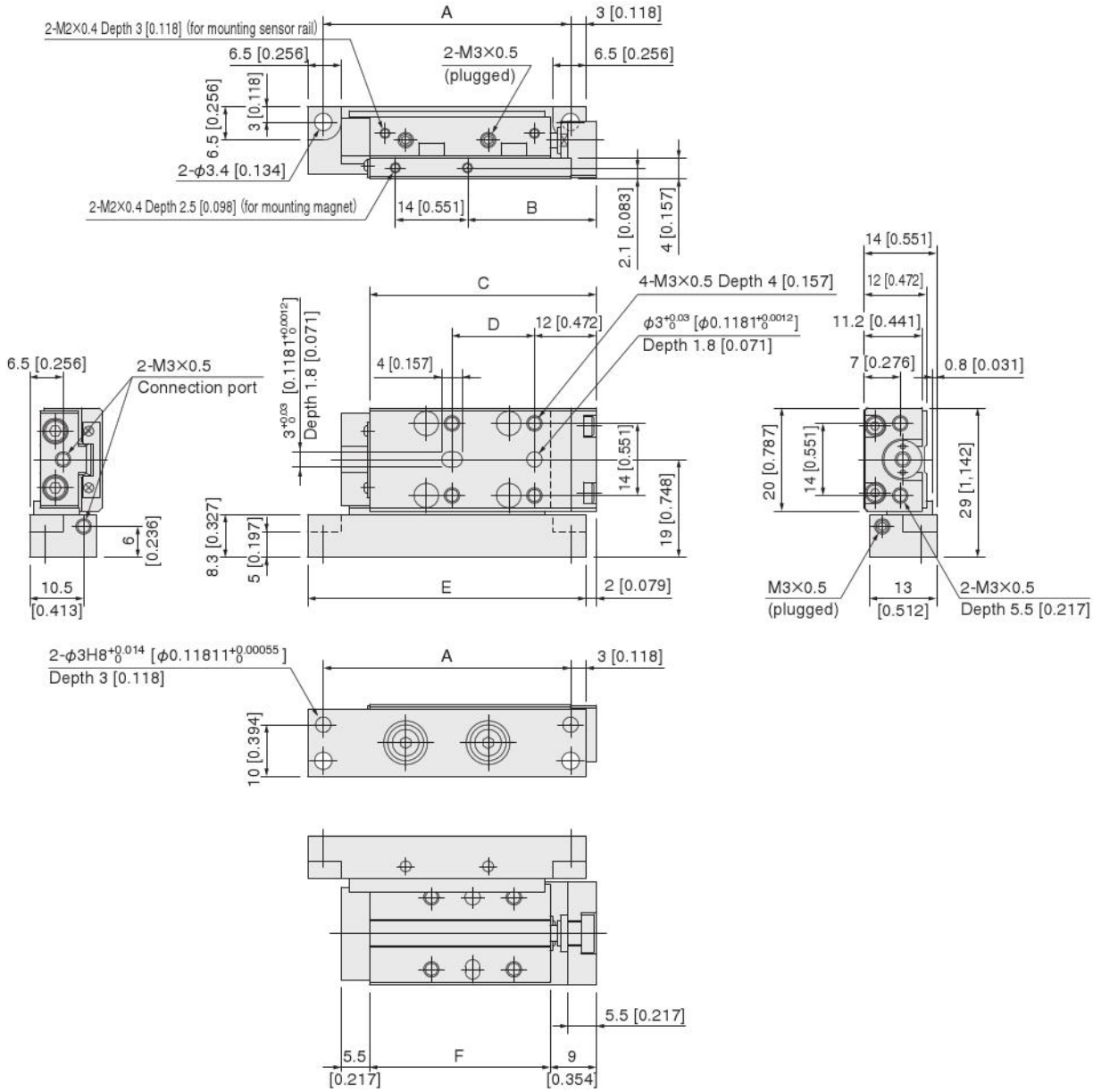

In the case of magnet and sensor rail installed

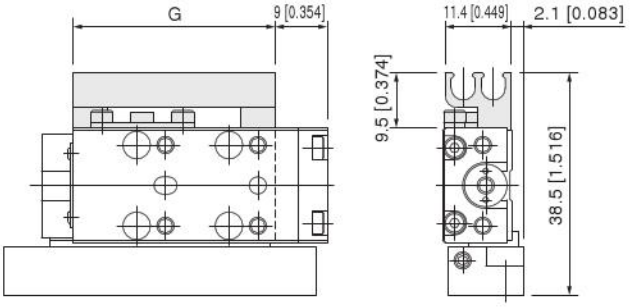

Locating pin: -P (P-MGA1)

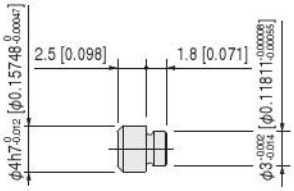

Stroke	A	B	C	D	E	F	G
5, 10	48 [1.890]	25 [0.984]	44 [1.732]	16 [0.630]	54 [2.126]	35 [1.378]	35 [1.378]
15	53 [2.087]	30 [1.181]	49 [1.929]	21 [0.827]	59 [2.323]	40 [1.575]	40 [1.575]
20	58 [2.283]	35 [1.378]	54 [2.126]	26 [1.024]	64 [2.520]	45 [1.772]	45 [1.772]
25, 30	68 [2.677]	45 [1.772]	64 [2.520]	36 [1.417]	74 [2.913]	55 [2.165]	55 [2.165]

Dimensions of Bore Size ϕ6 [0.236] mm [in.]

● Side-mounted cylinder with buffer (right side)

MGALG□6×Stroke-R

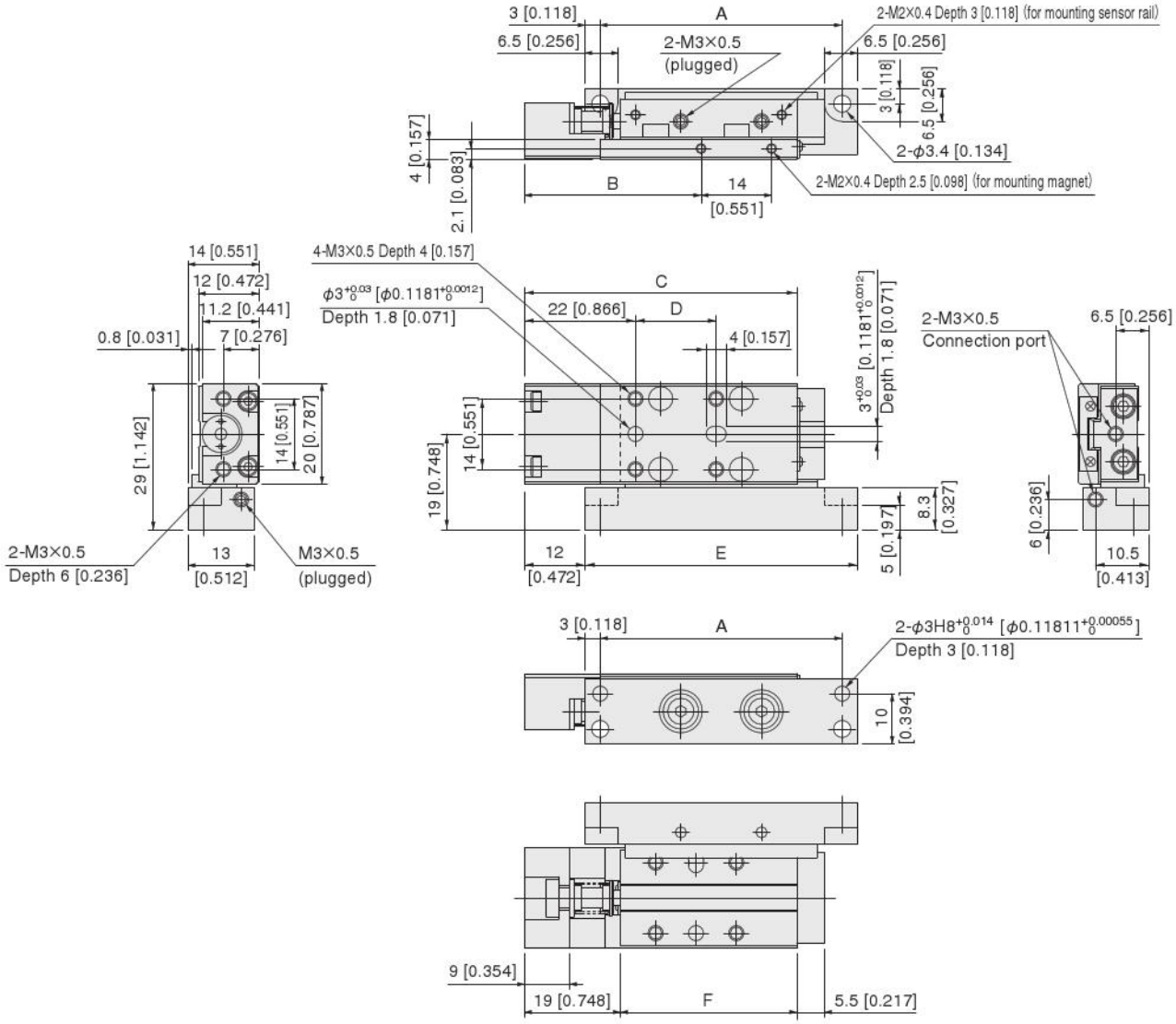

In the case of magnet and sensor rail installed

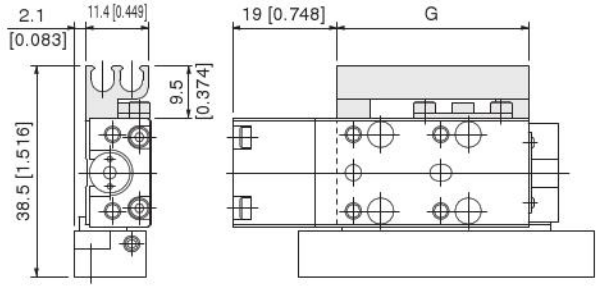

Locating pin: -P (P-MGA1)

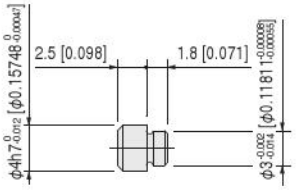

Stroke	A	B	C	D	E	F	G
5, 10	48 [1.890]	35 [1.378]	54 [2.126]	16 [0.630]	54 [2.126]	35 [1.378]	35 [1.378]
15	53 [2.087]	40 [1.575]	59 [2.323]	21 [0.827]	59 [2.323]	40 [1.575]	40 [1.575]
20	58 [2.283]	45 [1.772]	64 [2.520]	26 [1.024]	64 [2.520]	45 [1.772]	45 [1.772]
25, 30	68 [2.677]	55 [2.165]	74 [2.913]	36 [1.417]	74 [2.913]	55 [2.165]	55 [2.165]

Remark: The buffer stroke of ϕ6 [0.236] cylinder with buffer is a maximum of 4 mm [0.157 in.].

● Side-mounted cylinder with buffer (left side)

MGALG□6×Stroke-L

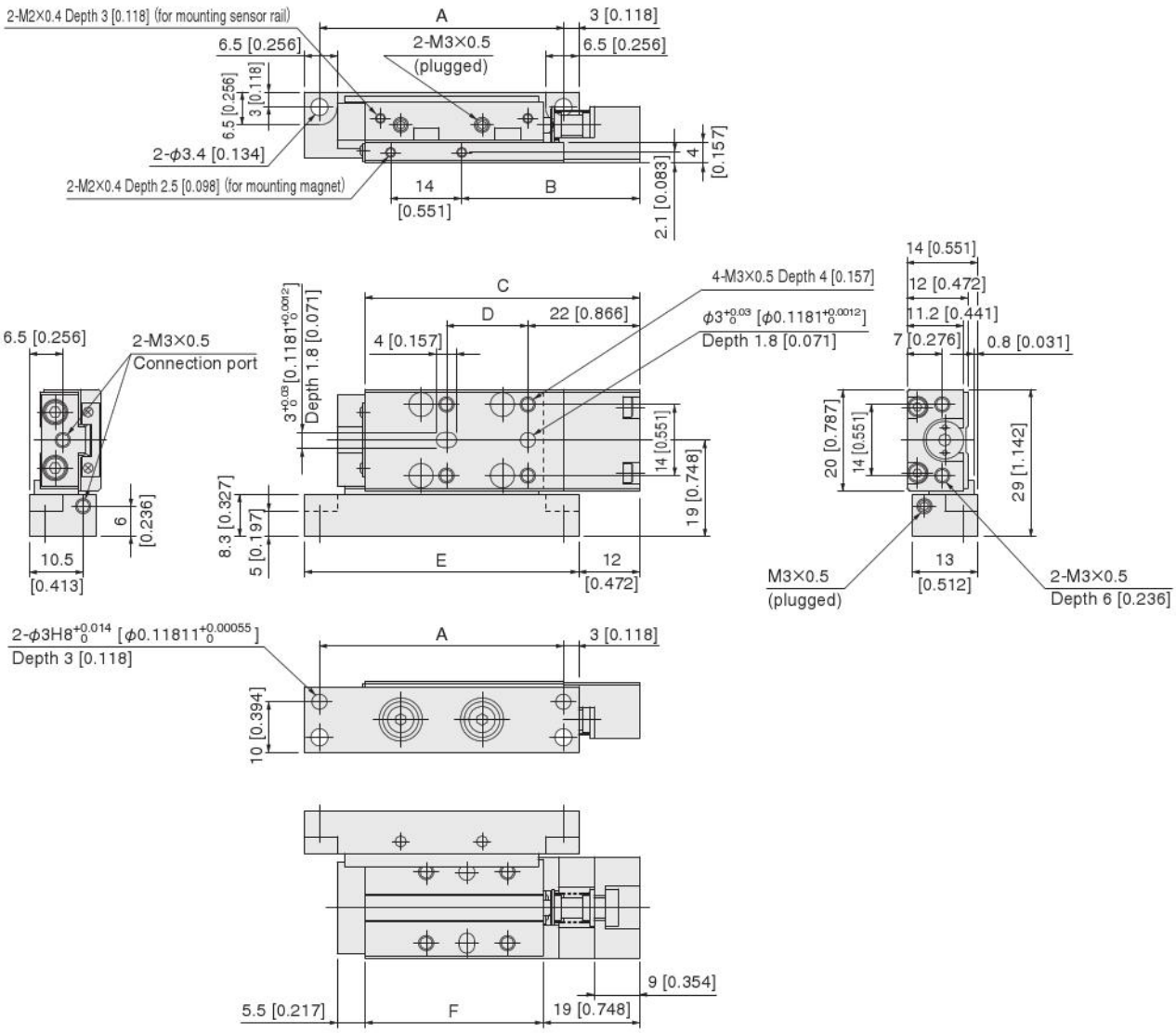

In the case of magnet and sensor rail installed

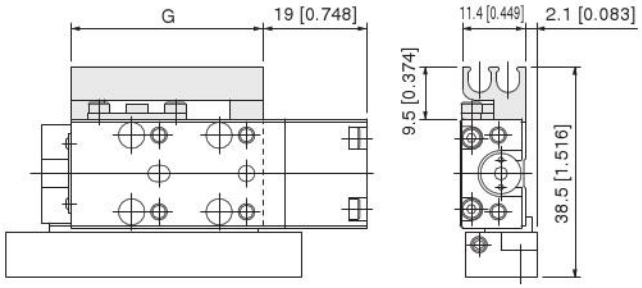

Locating pin: -P (P-MGA1)

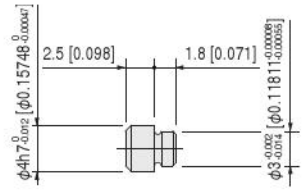

Stroke	A	B	C	D	E	F	G
5,10	48 [1.890]	35 [1.378]	54 [2.126]	16 [0.630]	54 [2.126]	35 [1.378]	35 [1.378]
15	53 [2.087]	40 [1.575]	59 [2.323]	21 [0.827]	59 [2.323]	40 [1.575]	40 [1.575]
20	58 [2.283]	45 [1.772]	64 [2.520]	26 [1.024]	64 [2.520]	45 [1.772]	45 [1.772]
25, 30	68 [2.677]	55 [2.165]	74 [2.913]	36 [1.417]	74 [2.913]	55 [2.165]	55 [2.165]

Remark: The buffer stroke of ϕ6 [0.236] cylinder with buffer is a maximum of 4 mm [0.157 in.].

● Standard cylinder, rear piping specifications

MGAH□6

Piping direction: -R

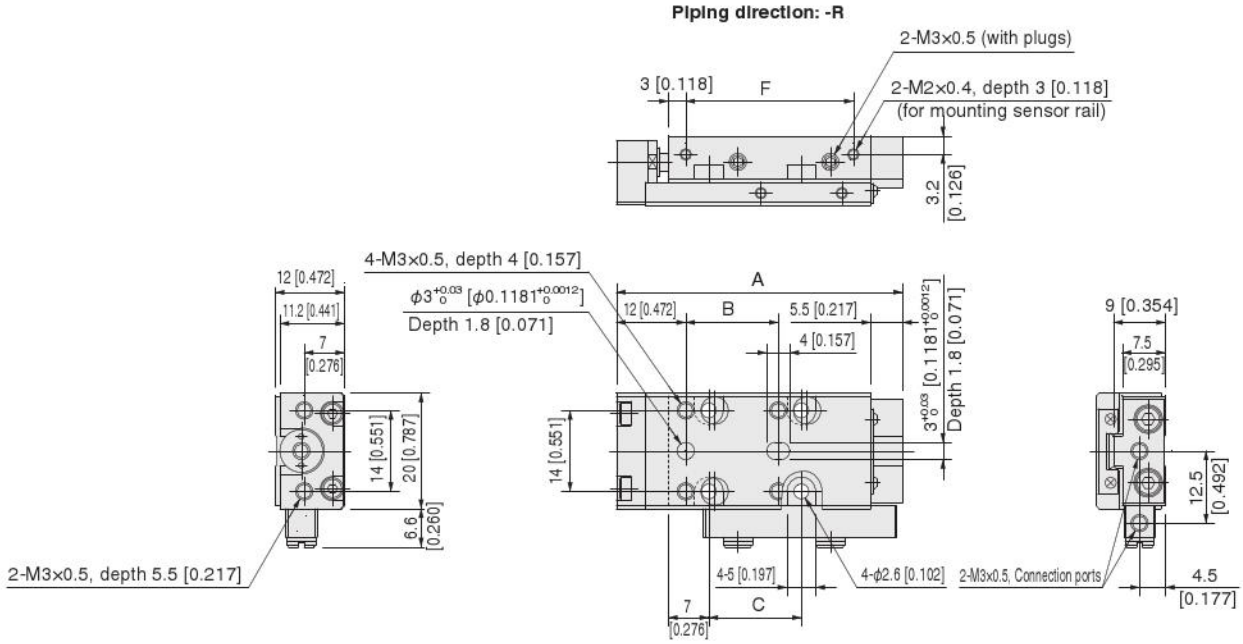

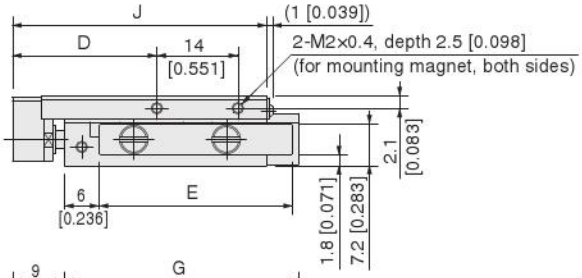

When magnet and sensor rail installed (Piping direction: -R)

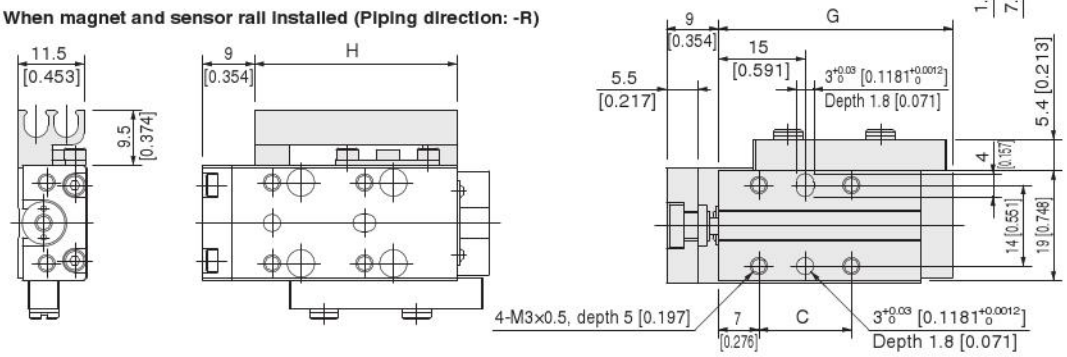

When magnet and sensor rail installed (Piping direction: -L)

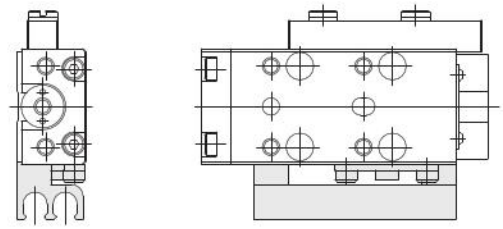

Locating pin: -P (P-MGA1)

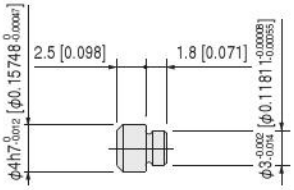

Stroke	A	B	C	D	E	F	G	H	J
5, 10	49.5 [1.949]	16 [0.63]	16 [0.63]	25 [0.984]	33.5 [1.319]	29 [1.142]	40.5 [1.594]	35 [1.378]	44 [1.732]
15	54.5 [2.146]	21 [0.827]	21 [0.827]	30 [1.181]	38.5 [1.516]	34 [1.339]	45.5 [1.791]	40 [1.575]	49 [1.929]
20	59.5 [2.343]	26 [1.024]	26 [1.024]	35 [1.378]	43.5 [1.713]	39 [1.535]	50.5 [1.988]	45 [1.772]	54 [2.126]
25, 30	69.5 [2.736]	36 [1.417]	36 [1.417]	45 [1.772]	53.5 [2.106]	49 [1.929]	60.5 [2.382]	55 [2.165]	64 [2.52]

● Cylinder with buffer, rear piping specifications

MGAGH□6

Piping direction: -R

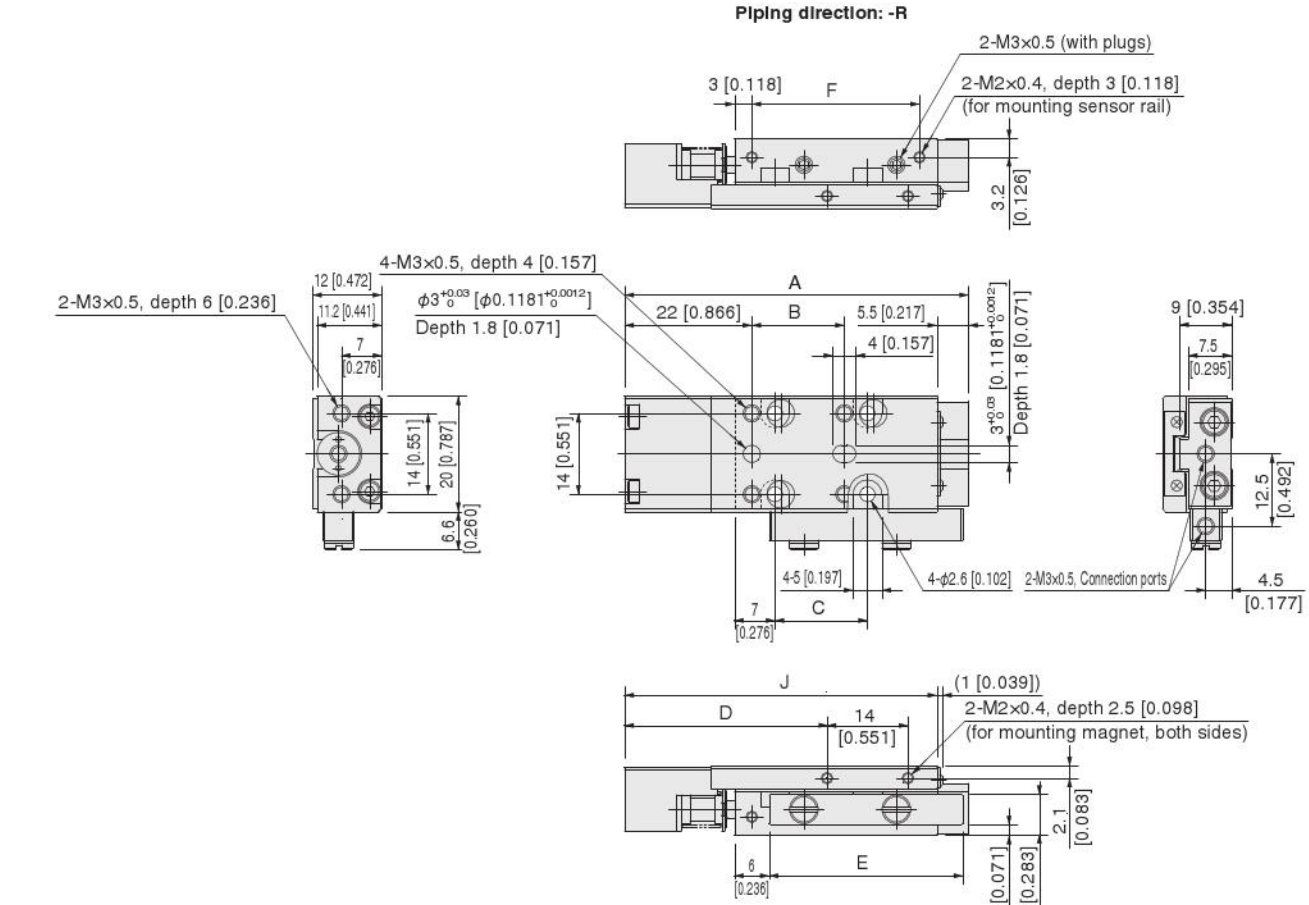

When magnet and sensor rail installed (Piping direction: -R)

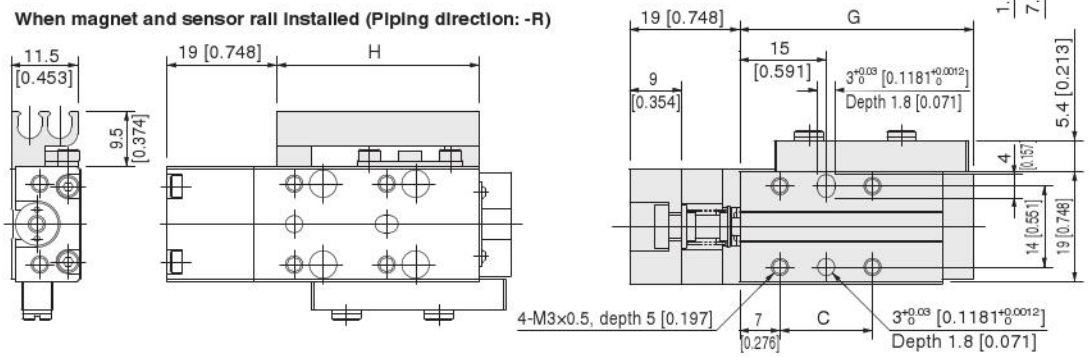

When magnet and sensor rail installed (Piping direction: -L)

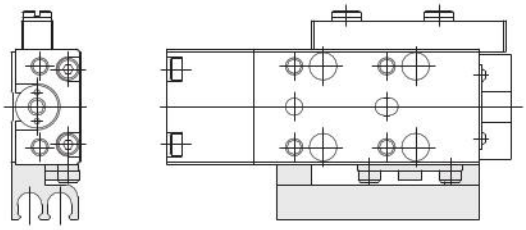

Locating pin: -P (P-MGA1)

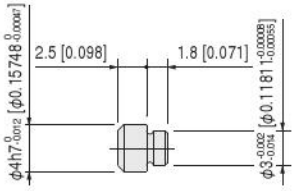

Stroke	A	B	C	D	E	F	G	H	J
5, 10	59.5 [2.343]	16 [0.630]	16 [0.630]	35 [1.378]	33.5 [1.319]	29 [1.142]	40.5 [1.594]	35 [1.378]	54 [2.126]
15	64.5 [2.539]	21 [0.827]	21 [0.827]	40 [1.575]	38.5 [1.516]	34 [1.339]	45.5 [1.791]	40 [1.575]	59 [2.323]
20	69.5 [2.736]	26 [1.024]	26 [1.024]	45 [1.772]	43.5 [1.713]	39 [1.535]	50.5 [1.988]	45 [1.772]	64 [2.520]
25, 30	79.5 [3.130]	36 [1.417]	36 [1.417]	55 [2.165]	53.5 [2.106]	49 [1.929]	60.5 [2.382]	55 [2.165]	74 [2.913]

Remark: The buffer stroke of ϕ6 [0.236] cylinder with buffer is a maximum of 4 mm [0.157 in.].

Dimensions of Bore Size ϕ8 [0.315] mm [in.]

● Standard cylinder

MGA□8

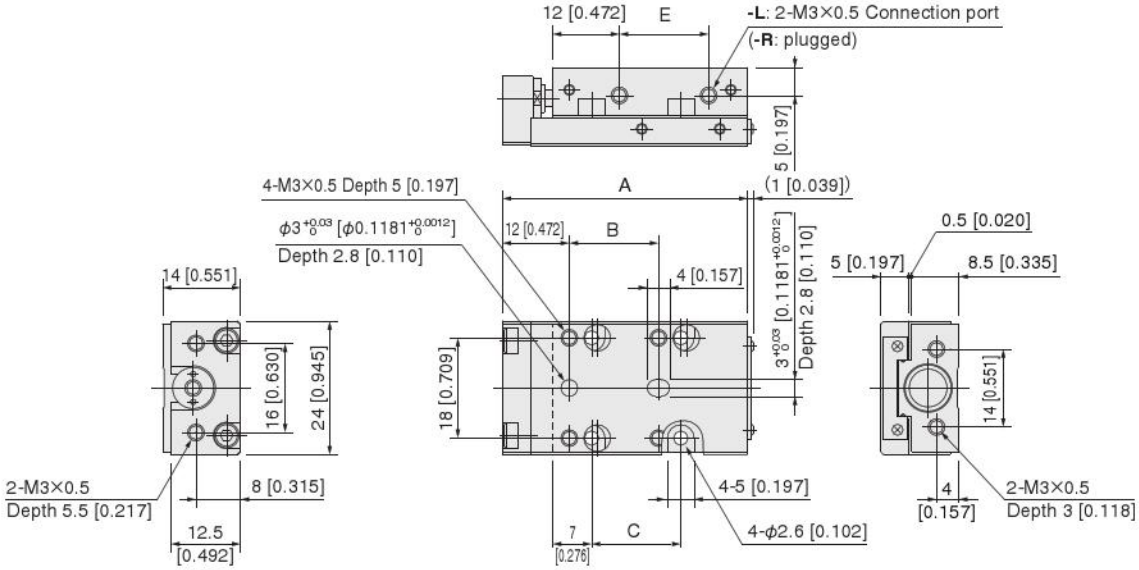

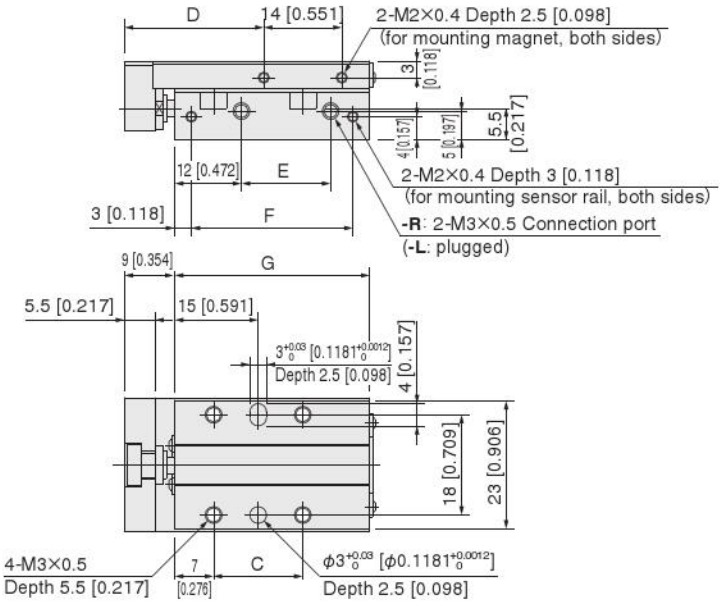

In the case of magnet and sensor rail installed (Piping direction: -R)

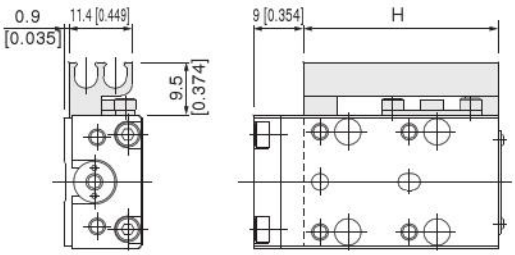

In the case of magnet and sensor rail installed (Piping direction: -L)

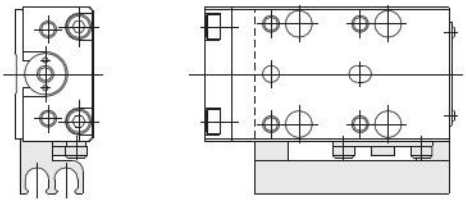

Locating pin: -P (P-MGA1)

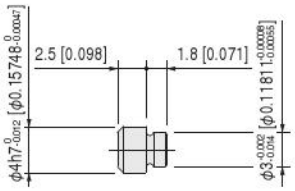

Stroke	A	B	C	D	E	F	G	H
5, 10	44 [1.732]	16 [0.630]	16 [0.630]	25 [0.984]	16 [0.630]	29 [1.142]	35 [1.378]	35 [1.378]
15, 20	54 [2.126]	26 [1.024]	26 [1.024]	35 [1.378]	26 [1.024]	39 [1.535]	45 [1.772]	45 [1.772]
25, 30	64 [2.520]	36 [1.417]	36 [1.417]	45 [1.772]	36 [1.417]	49 [1.929]	55 [2.165]	55 [2.165]

● Extended side stroke adjusting cylinder

MGAP□8

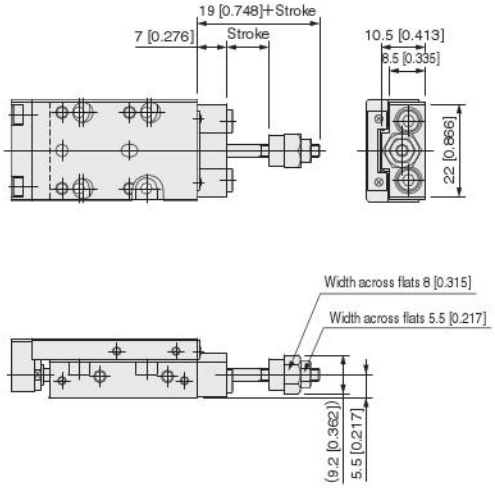

● Extended/retracted-side stroke adjusting cylinder

MGAE□8

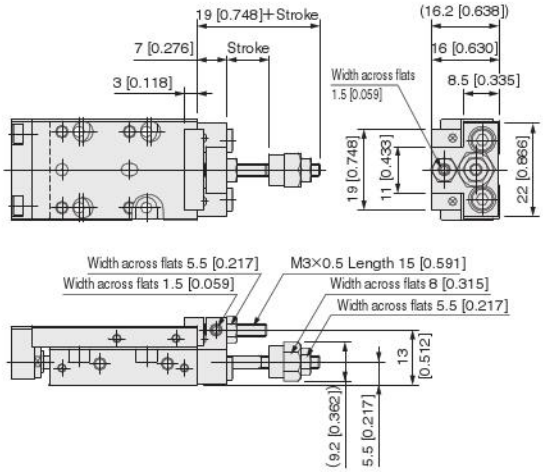

Note: For dimensions not shown in the above, see p.51.

● Cylinder with buffer

MGAG□8

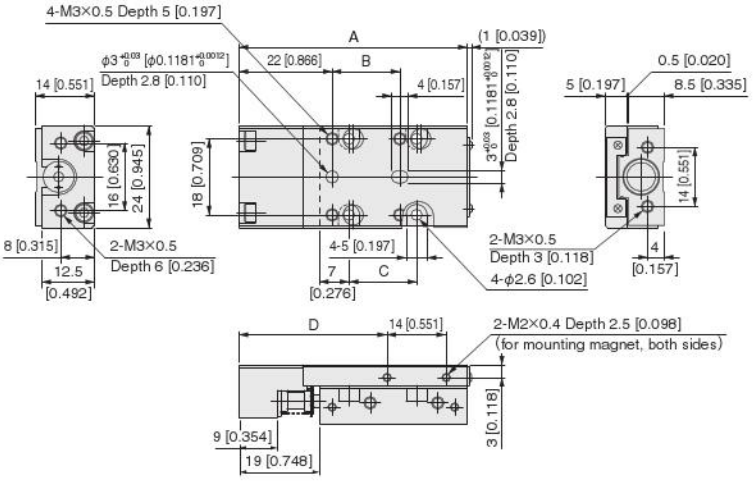

● Extended side stroke adjusting cylinder with buffer

MGAPG□8

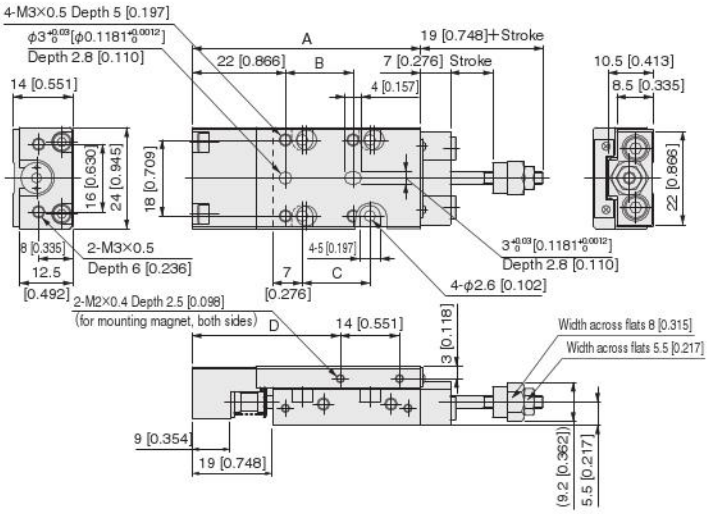

● Extended/retracted-side stroke adjusting cylinder with buffer

MGAEG□8

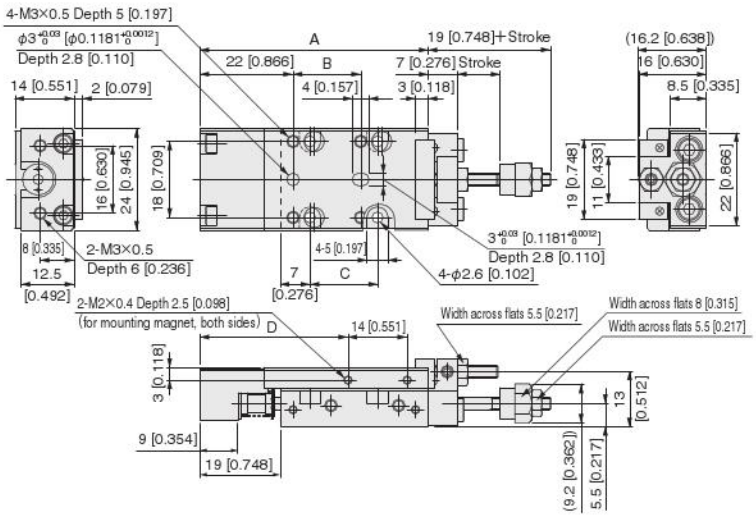

Stroke	A	B	C	D
5, 10	54 [2.126]	16 [0.630]	16 [0.630]	35 [1.378]
15, 20	64 [2.520]	26 [1.024]	26 [1.024]	45 [1.772]
25, 30	74 [2.913]	36 [1.417]	36 [1.417]	55 [2.165]

Remark: The buffer stroke of ϕ8 [0.315] cylinder with buffer is a maximum of 4 mm [0.157 in.].

● Side-mounted cylinder (right side)

MGAL□8×Stroke-R

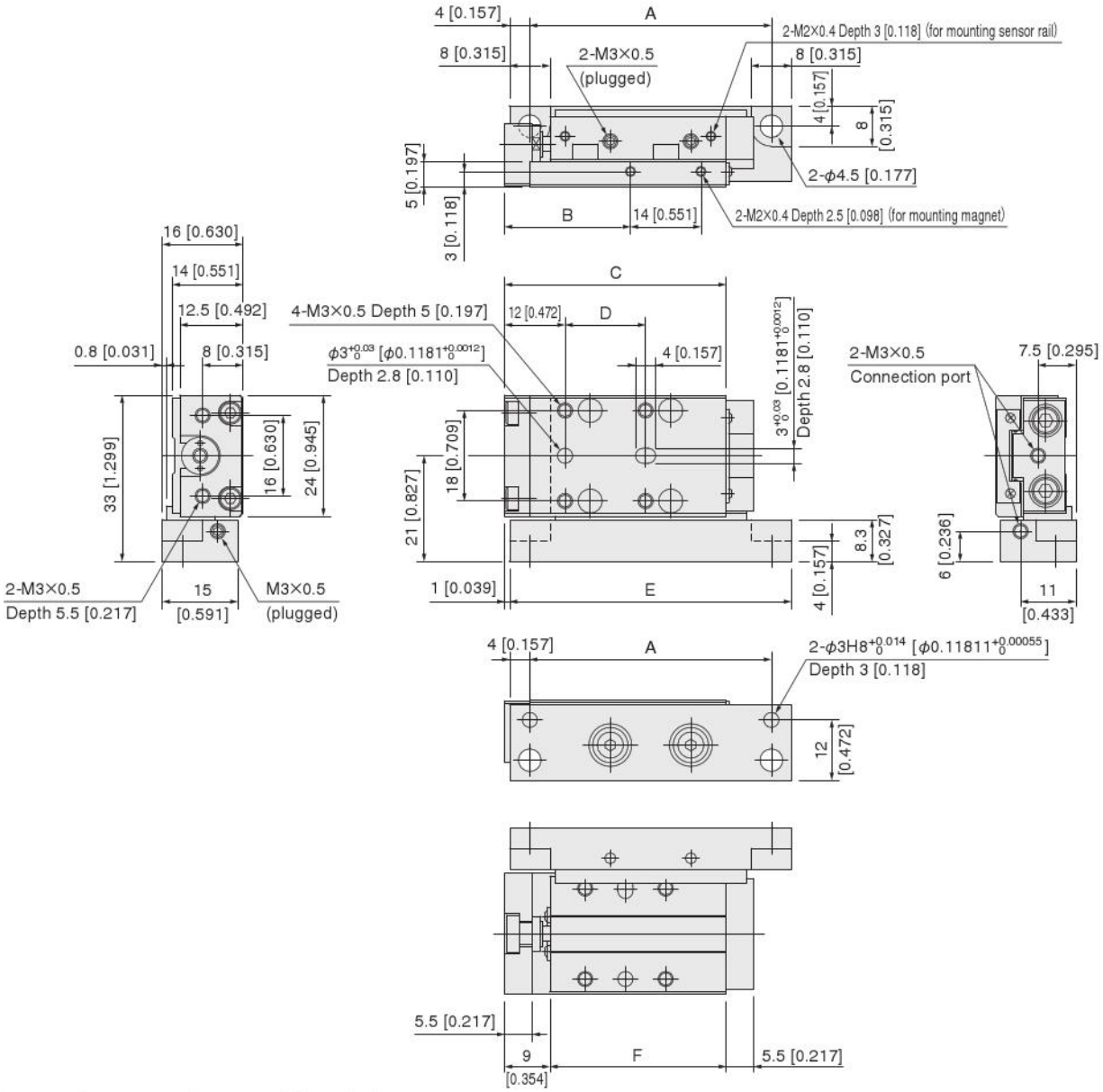

In the case of magnet and sensor rail installed

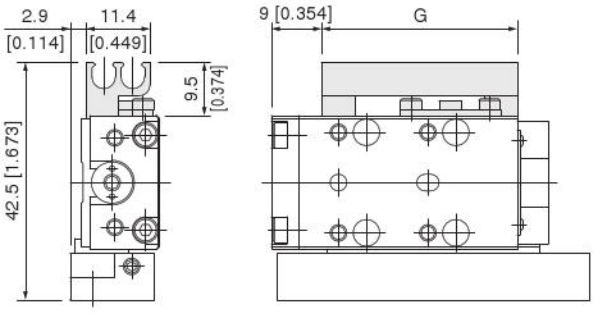

Locating pin: -P (P-MGA1)

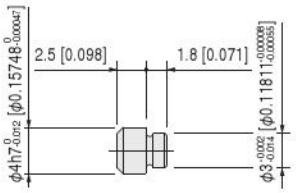

Stroke	A	B	C	D	E	F	G
5, 10	48 [1.890]	25 [0.984]	44 [1.732]	16 [0.630]	56 [2.205]	35 [1.378]	35 [1.378]
15, 20	58 [2.283]	35 [1.378]	54 [2.126]	26 [1.024]	66 [2.598]	45 [1.772]	45 [1.772]
25, 30	68 [2.677]	45 [1.772]	64 [2.520]	36 [1.417]	76 [2.992]	55 [2.165]	55 [2.165]

● Side-mounted cylinder (left side)

MGAL□8×Stroke-L

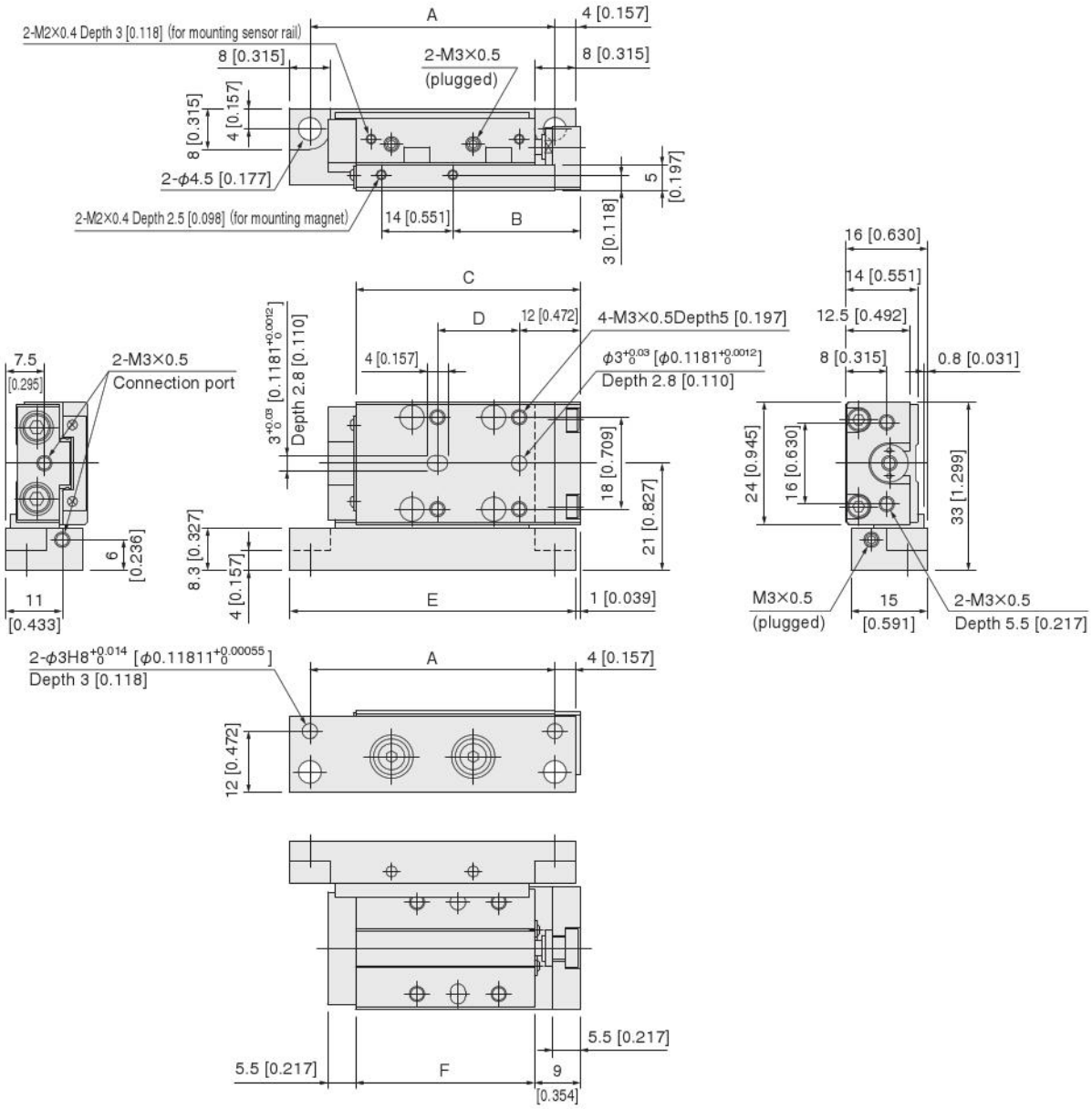

In the case of magnet and sensor rail installed

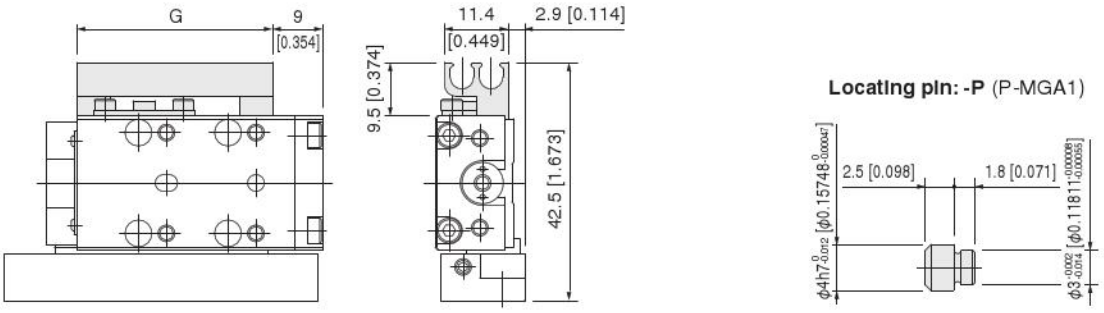

Stroke	A	B	C	D	E	F	G
5, 10	48 [1.890]	25 [0.984]	44 [1.732]	16 [0.630]	56 [2.205]	35 [1.378]	35 [1.378]
15, 20	58 [2.283]	35 [1.378]	54 [2.126]	26 [1.024]	66 [2.598]	45 [1.772]	45 [1.772]
25, 30	68 [2.677]	45 [1.772]	64 [2.520]	36 [1.417]	76 [2.992]	55 [2.165]	55 [2.165]

● Side-mounted cylinder with buffer (right side)

MGALG□8×Stroke-R

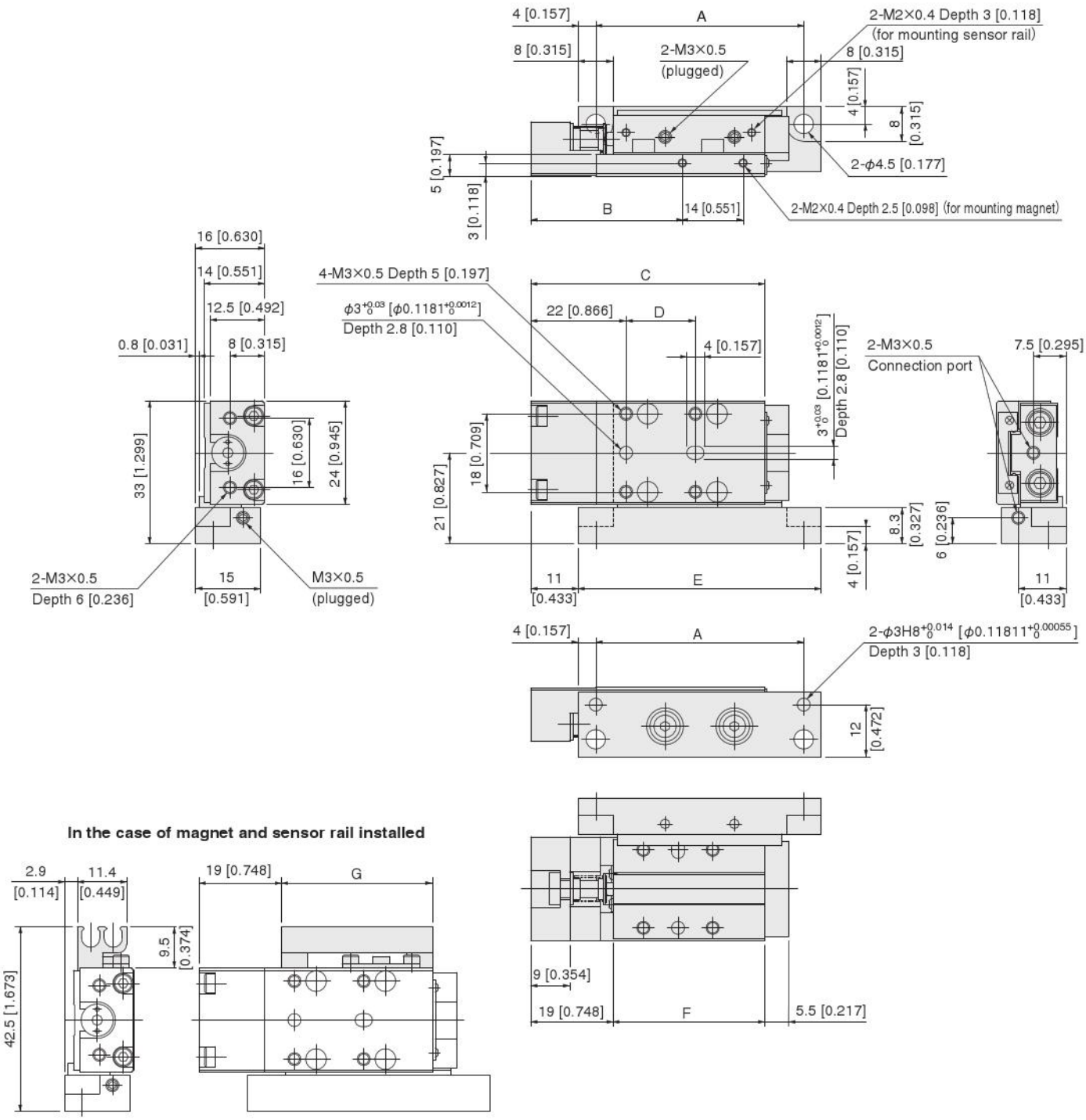

Locating pin: -P (P-MGA1)

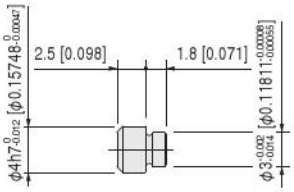

Stroke	A	B	C	D	E	F	G
5, 10	48 [1.890]	35 [1.378]	54 [2.126]	16 [0.630]	56 [2.205]	35 [1.378]	35 [1.378]
15, 20	58 [2.283]	45 [1.772]	64 [2.520]	26 [1.024]	66 [2.598]	45 [1.772]	45 [1.772]
25, 30	68 [2.677]	55 [2.165]	74 [2.913]	36 [1.417]	76 [2.992]	55 [2.165]	55 [2.165]

Remark: The buffer stroke of ϕ8 [0.315] cylinder with buffer is a maximum of 4 mm [0.157 in.].

● Side-mounted cylinder with buffer (left side)

MGALG□8×Stroke-L

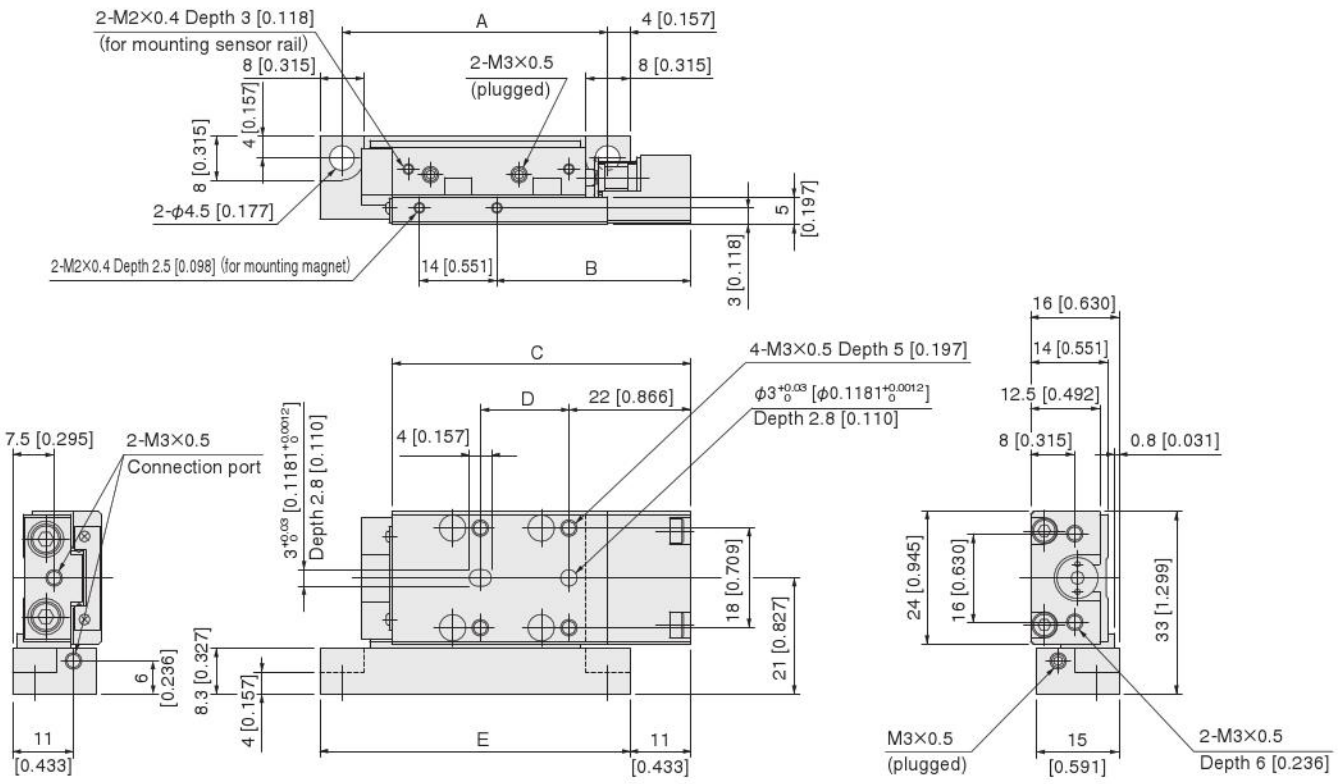

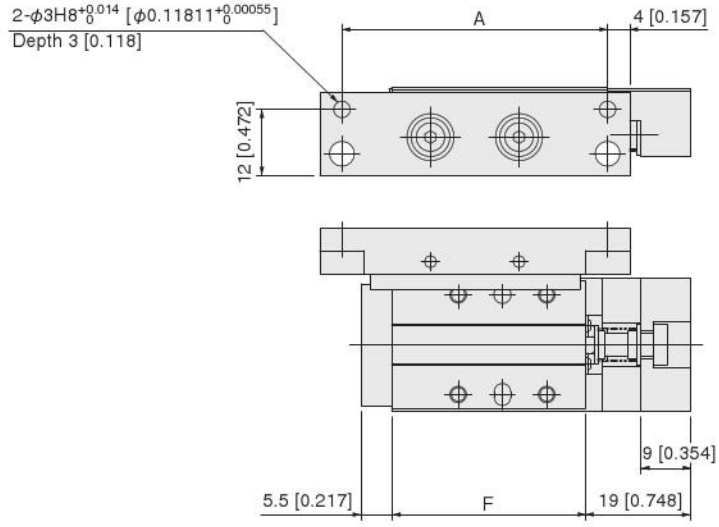

In the case of magnet and sensor rail installed

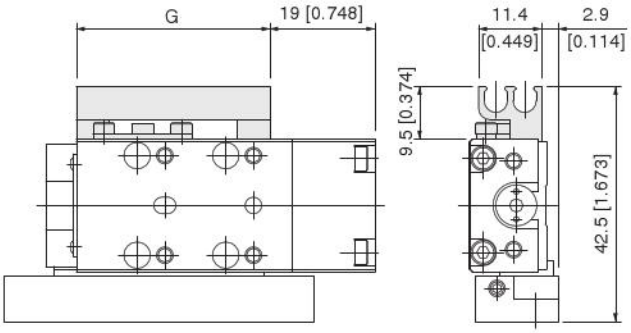

Locating pin: -P (P-MGA1)

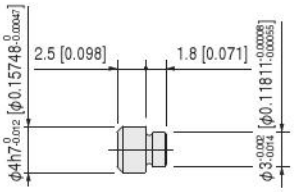

Stroke	A	B	C	D	E	F	G
5, 10	48 [1.890]	35 [1.378]	54 [2.126]	16 [0.630]	56 [2.205]	35 [1.378]	35 [1.378]
15, 20	58 [2.283]	45 [1.772]	64 [2.520]	26 [1.024]	66 [2.598]	45 [1.772]	45 [1.772]
25, 30	68 [2.677]	55 [2.165]	74 [2.913]	36 [1.417]	76 [2.992]	55 [2.165]	55 [2.165]

Remark : The buffer stroke of ϕ8 [0.315] cylinder with buffer is a maximum of 4 mm [0.157 in.].

● Standard cylinder, rear piping specifications

MGAH□8

Piping direction: -R

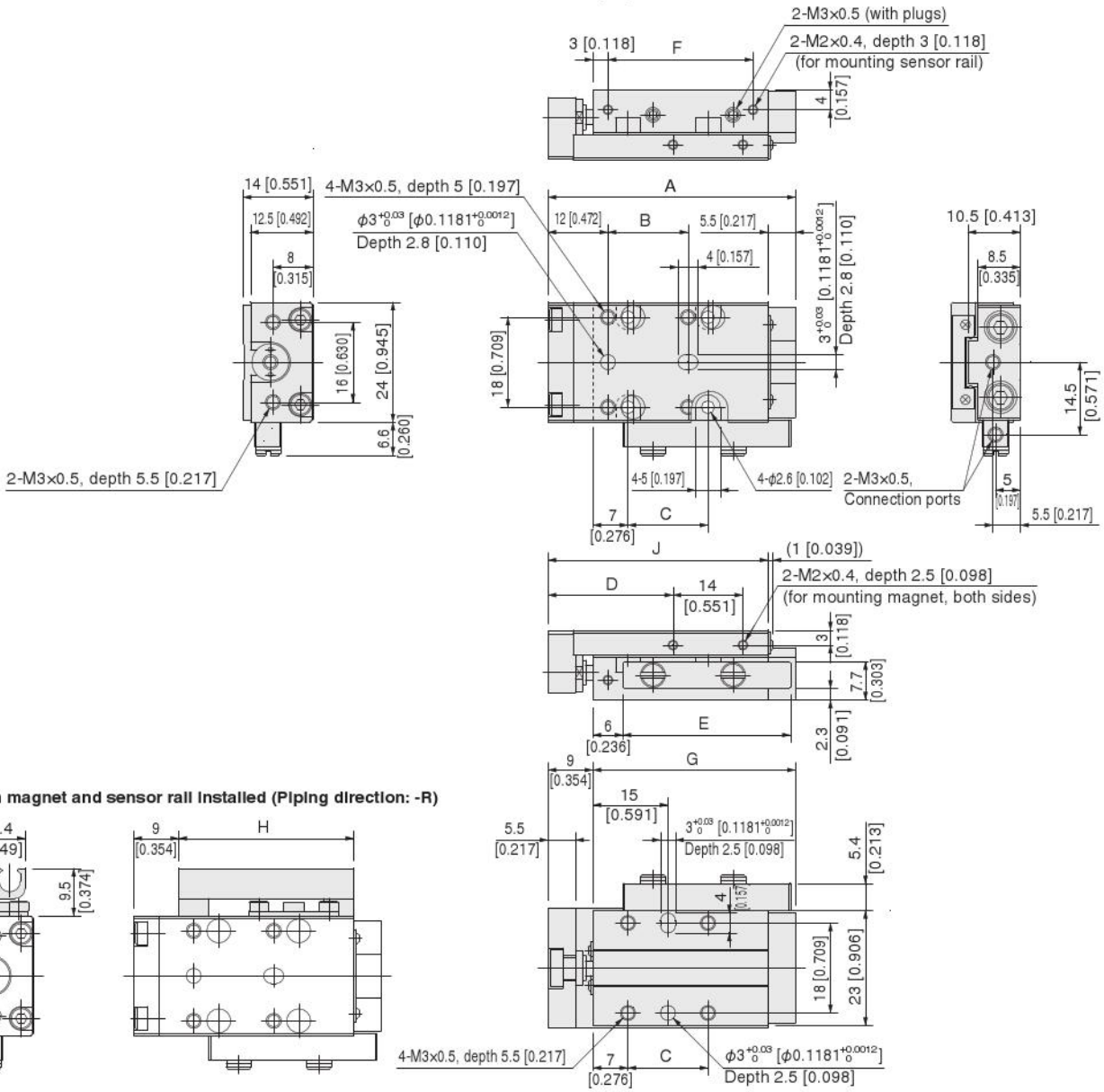

When magnet and sensor rail installed (Piping direction: -R)

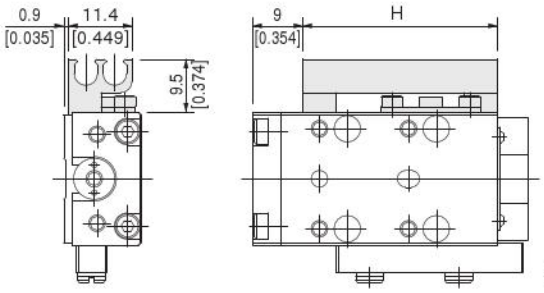

When magnet and sensor rail installed (Piping direction: -L)

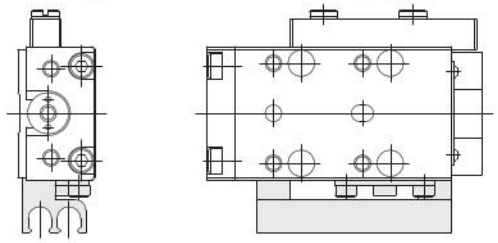

Locating pin: -P (P-MGA1)

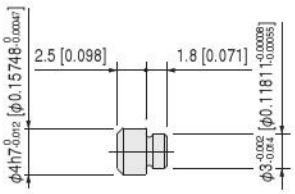

Stroke	A	B	C	D	E	F	G	H	J
5, 10	49.5 [1.949]	16 [0.630]	16 [0.630]	25 [0.984]	33.5 [1.319]	29 [1.142]	40.5 [1.594]	35 [1.378]	44 [1.732]
15, 20	59.5 [2.343]	26 [1.024]	26 [1.024]	35 [1.378]	43.5 [1.713]	39 [1.535]	50.5 [1.988]	45 [1.772]	54 [2.126]
25, 30	69.5 [2.736]	36 [1.417]	36 [1.417]	45 [1.772]	53.5 [2.106]	49 [1.929]	60.5 [2.382]	55 [2.165]	64 [2.520]

● Cylinder with buffer, rear piping specifications

MGAGH□8

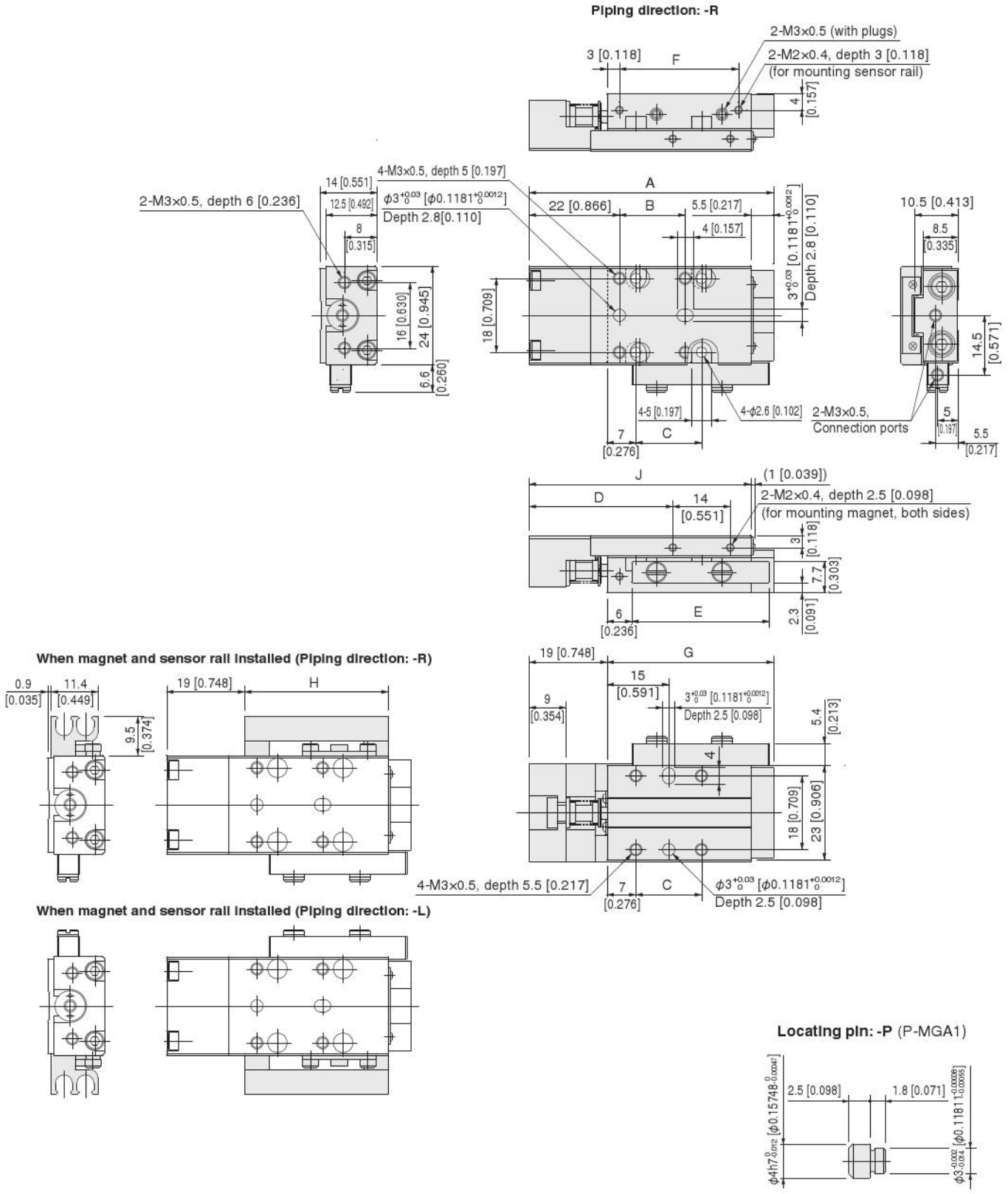

Stroke	A	B	C	D	E	F	G	H	J
5, 10	59.5 [2.343]	16 [0.630]	16 [0.630]	35 [1.378]	33.5 [1.319]	29 [1.142]	40.5 [1.594]	35 [1.378]	54 [2.126]
15, 20	69.5 [2.736]	26 [1.024]	26 [1.024]	45 [1.772]	43.5 [1.713]	39 [1.535]	50.5 [1.988]	45 [1.772]	64 [2.520]
25, 30	79.5 [3.130]	36 [1.417]	36 [1.417]	55 [2.165]	53.5 [2.106]	49 [1.929]	60.5 [2.382]	55 [2.165]	74 [2.913]

Remark : The buffer stroke of ϕ8 [0.315] cylinder with buffer is a maximum of 4 mm [0.157 in.].

Dimensions of Bore Size ϕ10 [0.394] mm [in.]

● Standard cylinder

MGA10

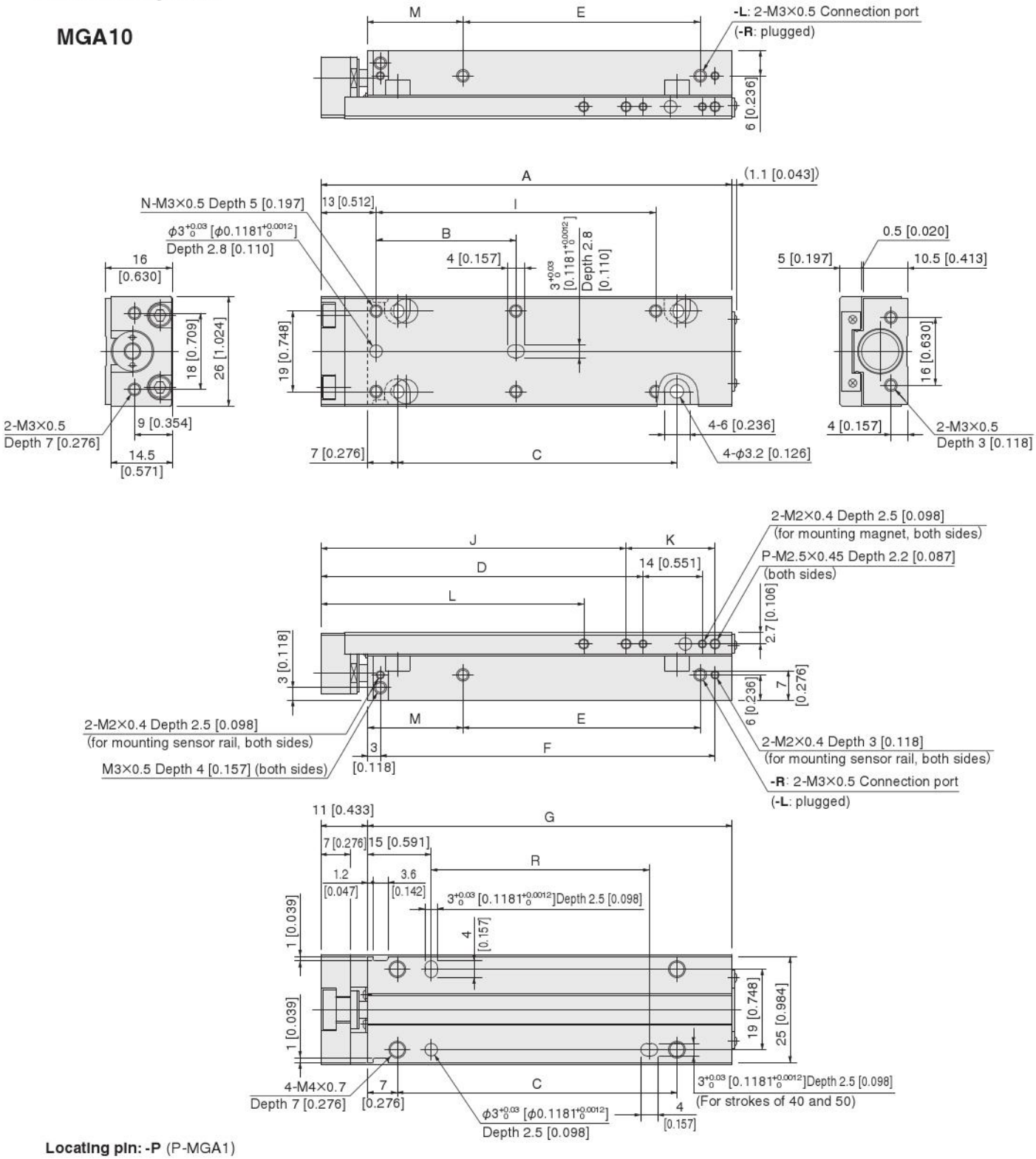

Locating pin: -P (P-MGA1)

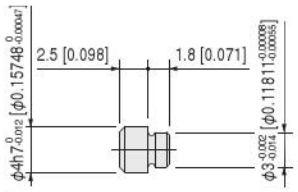

Stroke	A	B	C	D	E	F	G	H	I	J	K	L	M	N	P	R
5, 10	47 [1.850]	16 [0.630]	16 [0.630]	26 [1.024]	16 [0.630]	29 [1.142]	36 [1.417]	35 [1.378]	—	32 [1.260]	11 [0.433]	—	12.5 [0.492]	4	2	—
15, 20	57 [2.244]	26 [1.024]	26 [1.024]	36 [1.417]	26 [1.024]	39 [1.535]	46 [1.811]	45 [1.772]	—	42 [1.654]	11 [0.433]	—	12.5 [0.492]	4	2	—
25, 30	67 [2.638]	36 [1.417]	36 [1.417]	46 [1.811]	36 [1.417]	49 [1.929]	56 [2.205]	55 [2.165]	—	52 [2.047]	11 [0.433]	—	12.5 [0.492]	4	2	—
40, 50	97 [3.819]	33 [1.299]	66 [2.598]	76 [2.992]	56 [2.205]	79 [3.110]	86 [3.386]	85 [3.346]	66 [2.598]	72 [2.835]	21 [0.827]	62 [2.441]	22.5 [0.886]	6	3	50 [1.969]

Dimensions of Bore Size ϕ10 [0.394] mm [in.]

- **Cylinder with magnet and sensor rail MGAS10**
- **Cylinder with shock absorber MGA□10-SS□**

Piping direction: -R

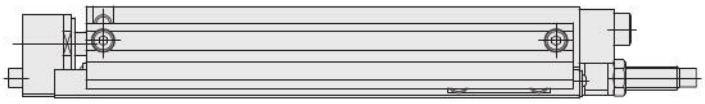

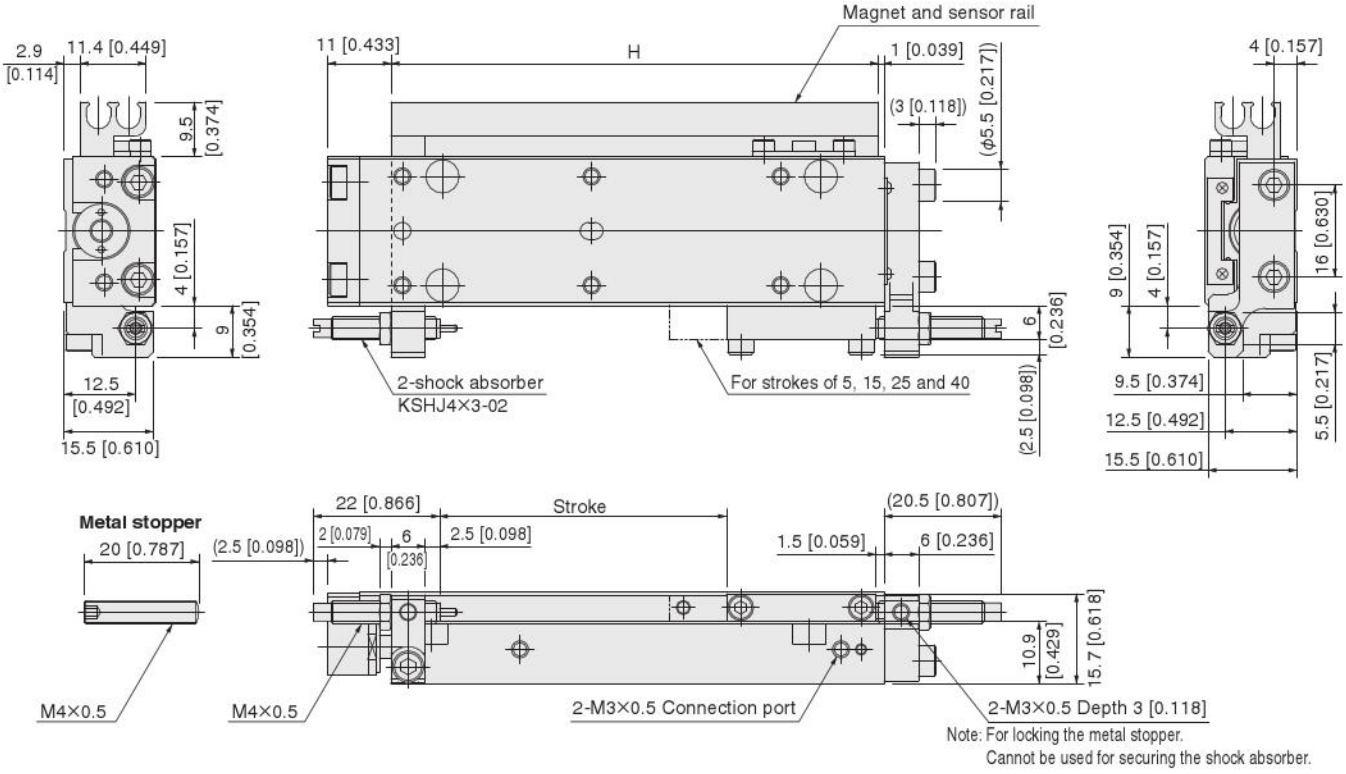

Note: For locking the metal stopper.
Cannot be used for securing the shock absorber.

Piping direction: -L

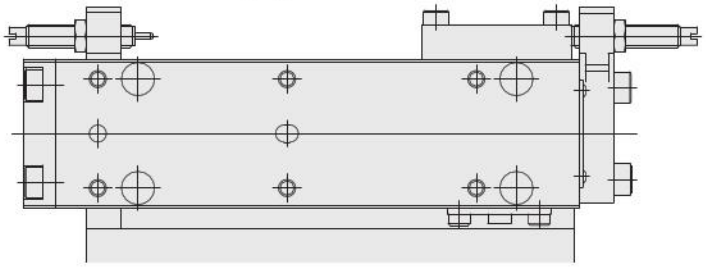

Locating pin: -P (P-MGA1)

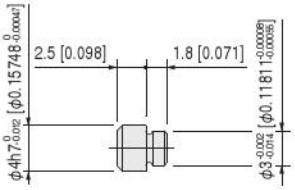

● Extended side stroke adjusting cylinder

MGAP10

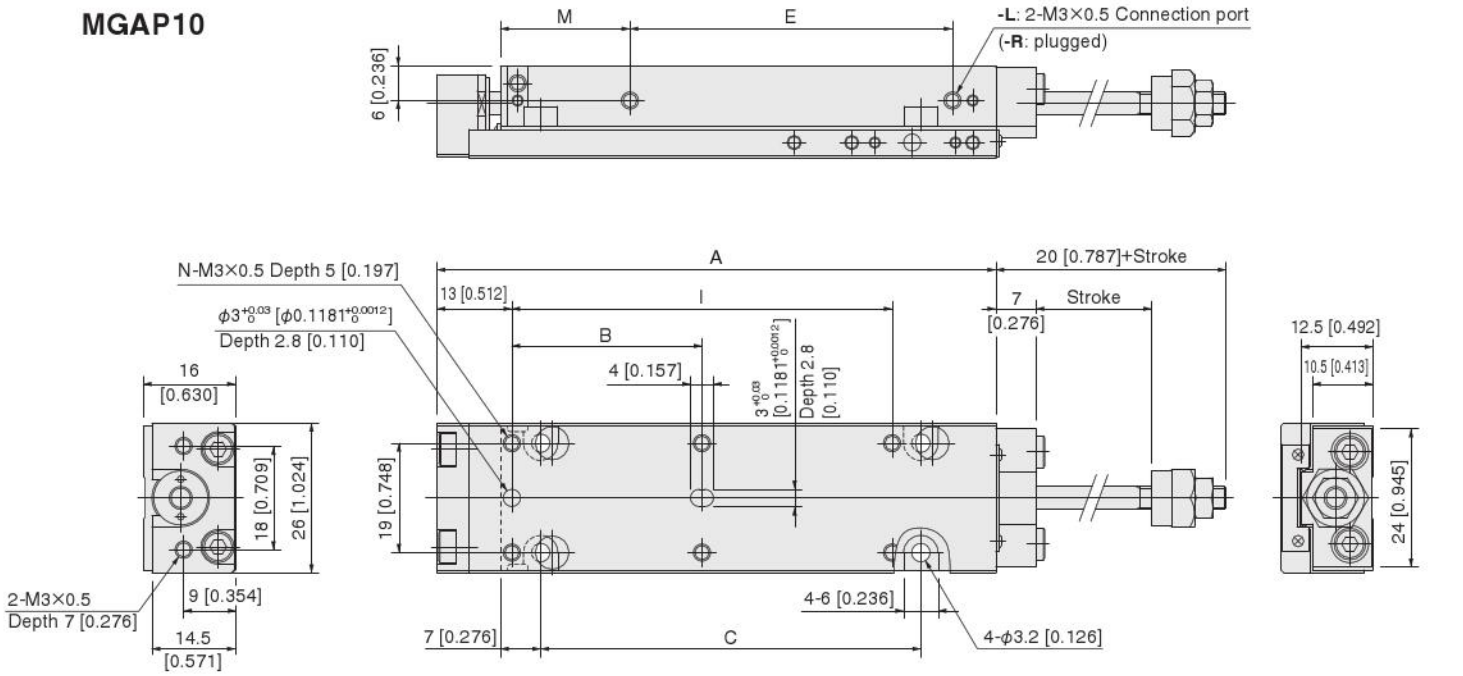

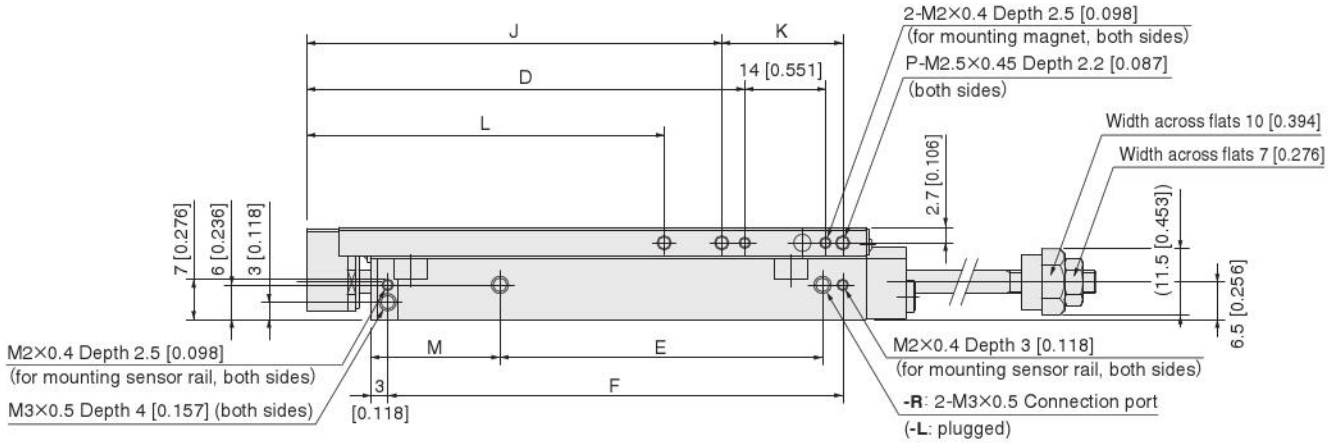

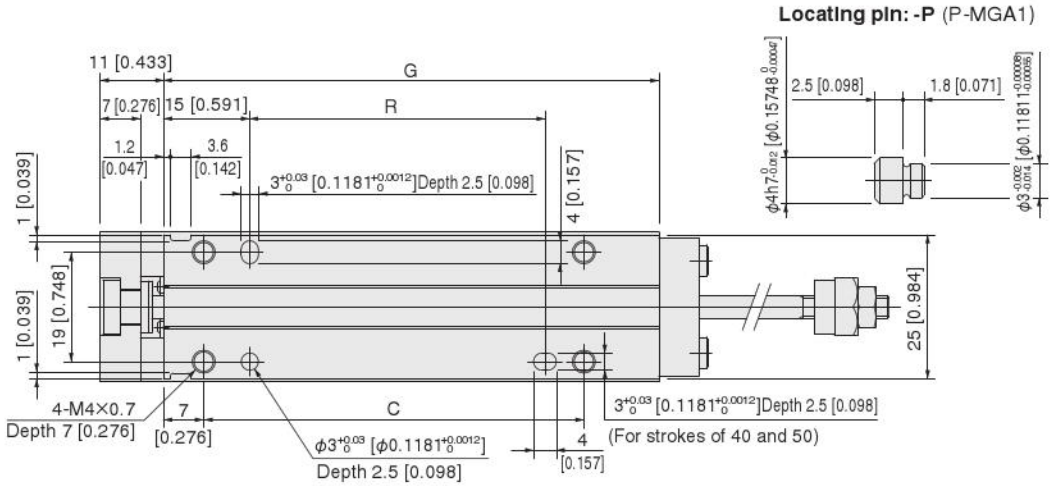

Stroke	A	B	C	D	E	F	G	H	I	J	K	L	M	N	P	R
5, 10	47 [1.850]	16 [0.630]	16 [0.630]	26 [1.024]	16 [0.630]	29 [1.142]	36 [1.417]	35 [1.378]	—	32 [1.260]	11 [0.433]	—	12.5 [0.492]	4	2	—
15, 20	57 [2.244]	26 [1.024]	26 [1.024]	36 [1.417]	26 [1.024]	39 [1.535]	46 [1.811]	45 [1.772]	—	42 [1.654]	11 [0.433]	—	12.5 [0.492]	4	2	—
25, 30	67 [2.638]	36 [1.417]	36 [1.417]	46 [1.811]	36 [1.417]	49 [1.929]	56 [2.205]	55 [2.165]	—	52 [2.047]	11 [0.433]	—	12.5 [0.492]	4	2	—
40, 50	97 [3.819]	33 [1.299]	66 [2.598]	76 [2.992]	56 [2.205]	79 [3.110]	86 [3.386]	85 [3.346]	66 [2.598]	72 [2.835]	21 [0.827]	62 [2.441]	22.5 [0.886]	6	3	50 [1.969]

● **Extended side stroke adjusting cylinder with magnet and sensor rail MGAPS10**

● **Extended side stroke adjusting cylinder with shock absorber MGAP□10-SSF**

Piping direction: -R

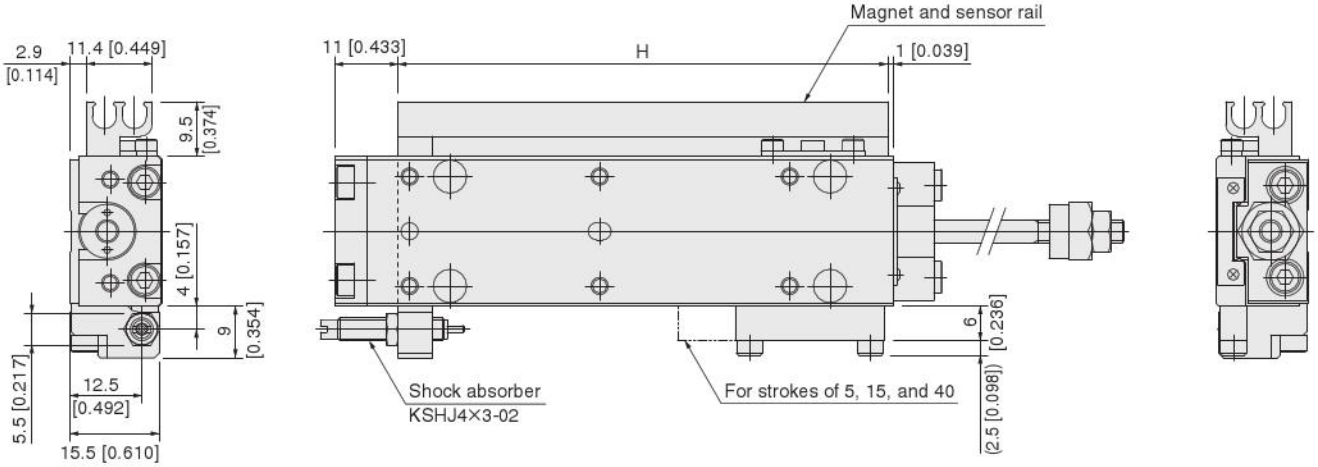

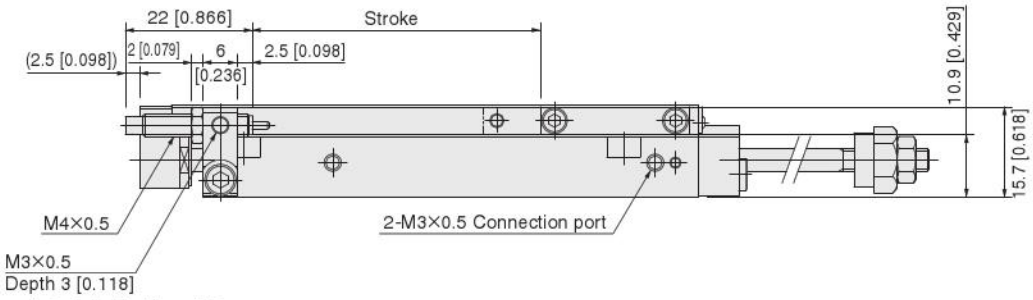

Note: For locking the metal stopper.
Cannot be used for securing the shock absorber.

Piping direction: -L

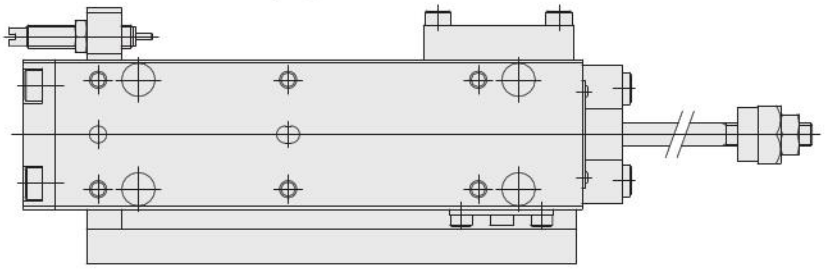

Locating pin: -P (P-MGA1)

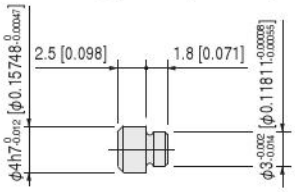

● Extended/retracted-side stroke adjusting cylinder

MGAE10

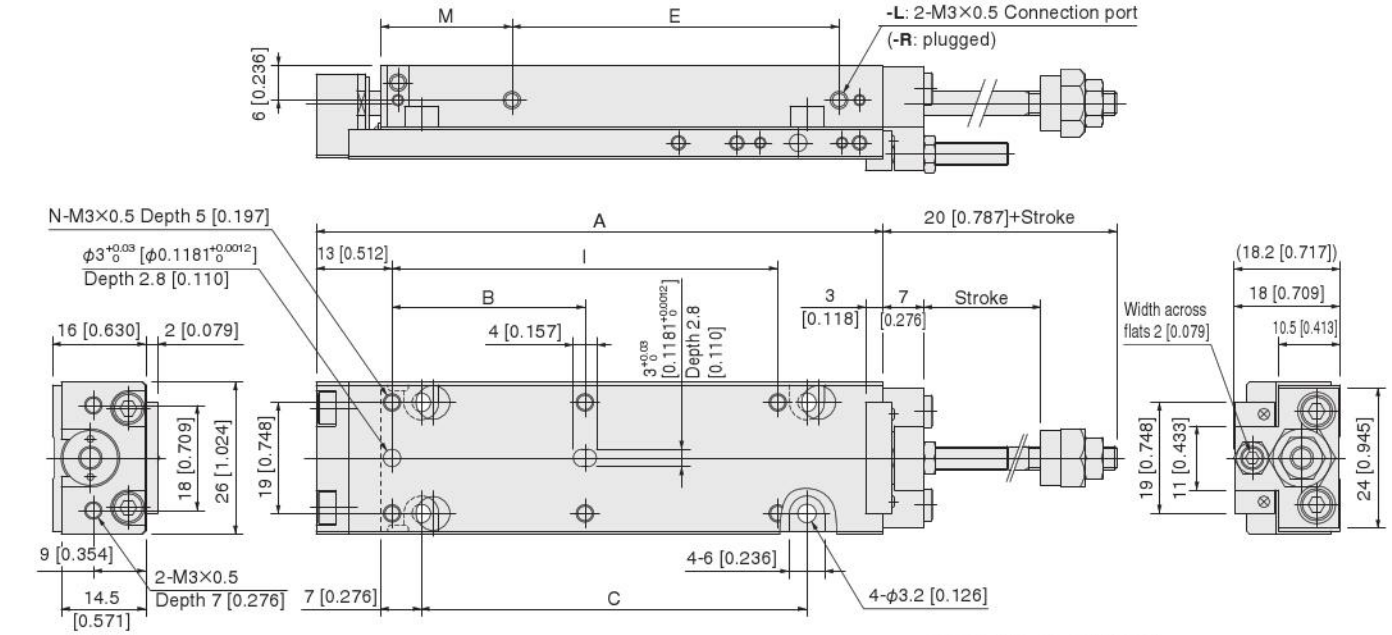

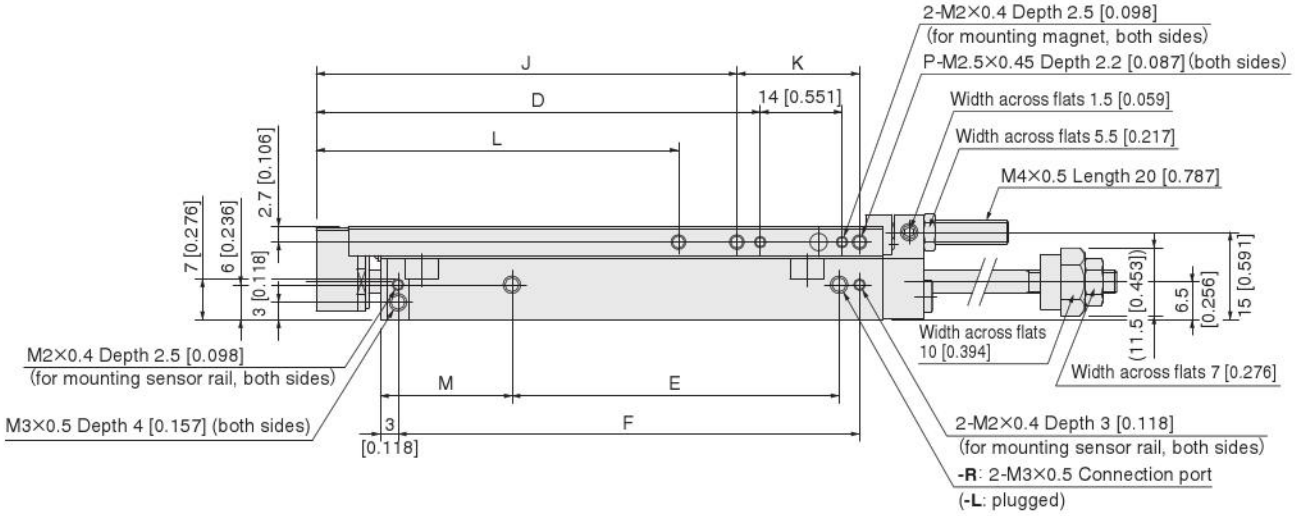

Locating pin: -P (P-MGA1)

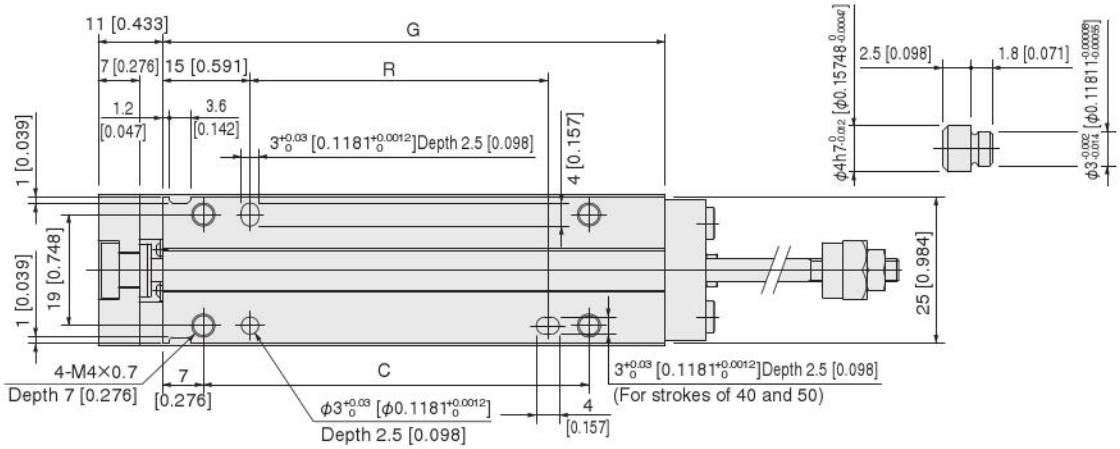

Stroke	A	B	C	D	E	F	G	H	I	J	K	L	M	N	P	R
5, 10	47 [1.850]	16 [0.630]	16 [0.630]	26 [1.024]	16 [0.630]	29 [1.142]	36 [1.417]	35 [1.378]	—	32 [1.260]	11 [0.433]	—	12.5 [0.492]	4	2	—
15, 20	57 [2.244]	26 [1.024]	26 [1.024]	36 [1.417]	26 [1.024]	39 [1.535]	46 [1.811]	45 [1.772]	—	42 [1.654]	11 [0.433]	—	12.5 [0.492]	4	2	—
25, 30	67 [2.638]	36 [1.417]	36 [1.417]	46 [1.811]	36 [1.417]	49 [1.929]	56 [2.205]	55 [2.165]	—	52 [2.047]	11 [0.433]	—	12.5 [0.492]	4	2	—
40, 50	97 [3.819]	33 [1.299]	66 [2.598]	76 [2.992]	56 [2.205]	79 [3.110]	86 [3.386]	85 [3.346]	66 [2.598]	72 [2.835]	21 [0.827]	62 [2.441]	22.5 [0.886]	6	3	50 [1.969]

● **Extended/retracted-side stroke adjusting cylinder with magnet and sensor rail MGAES10**

● **Extended/retracted-side stroke adjusting cylinder with shock absorber MGAE□10-SS□**

Piping direction: -R

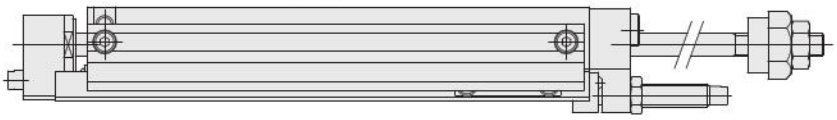

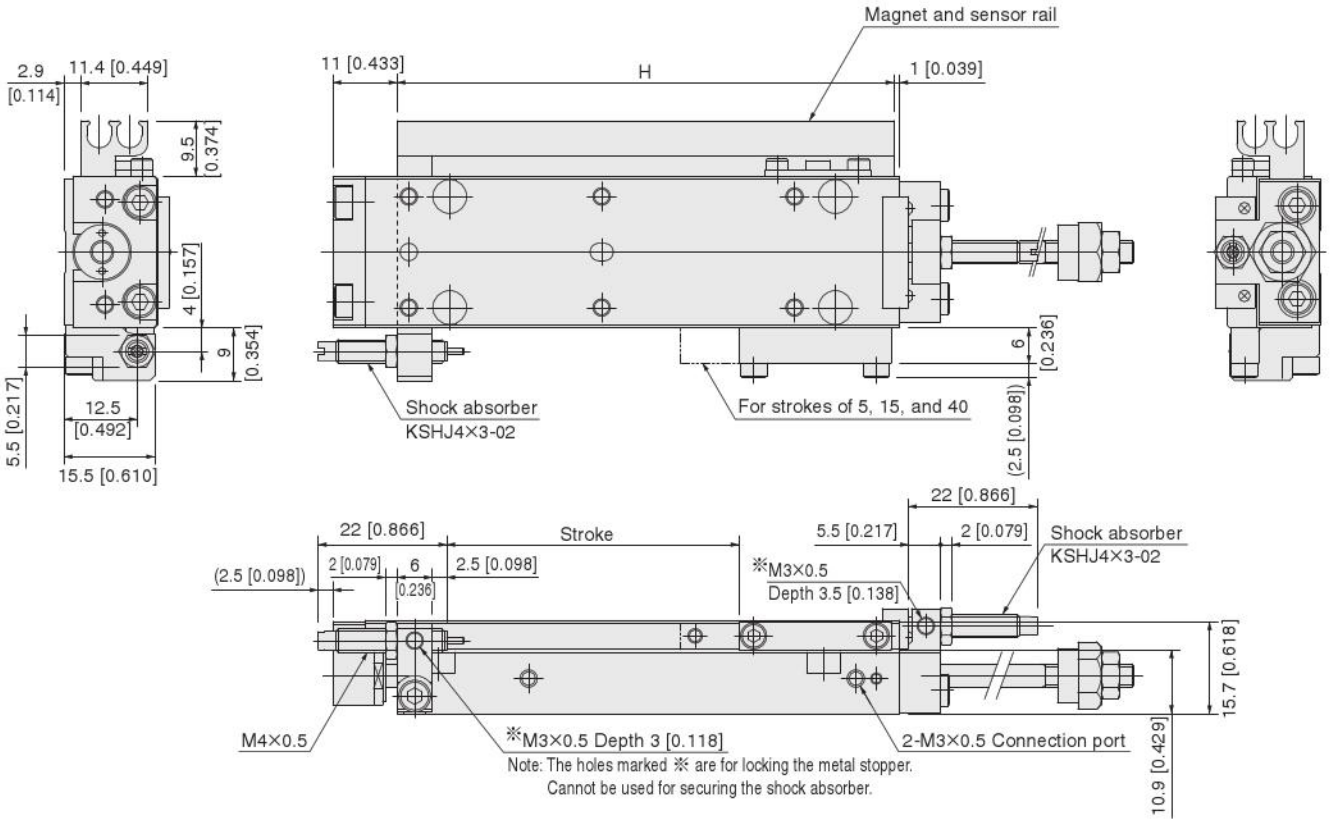

Piping direction: -L

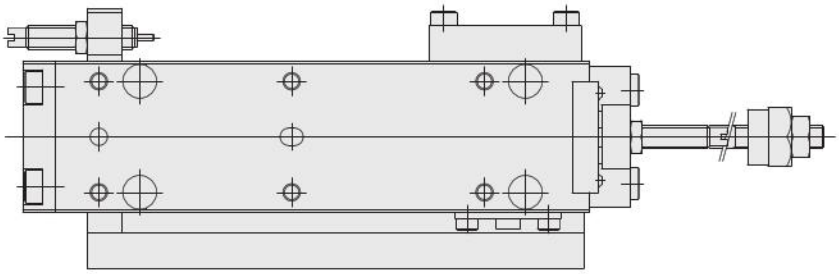

Locating pin: -P (P-MGA1)

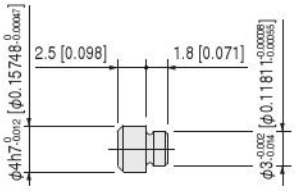

● Side-mounted cylinder (right side)

MGAL□10×Stroke-R

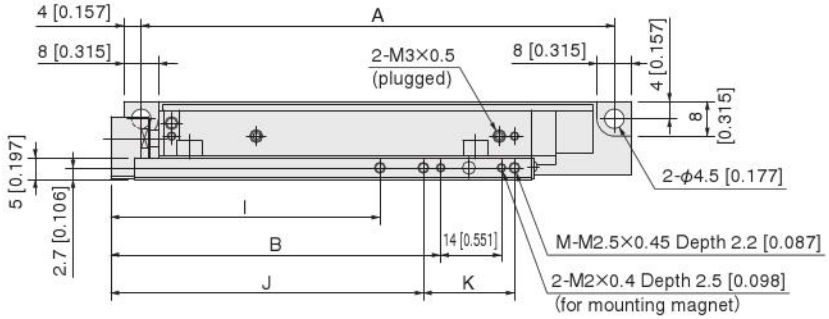

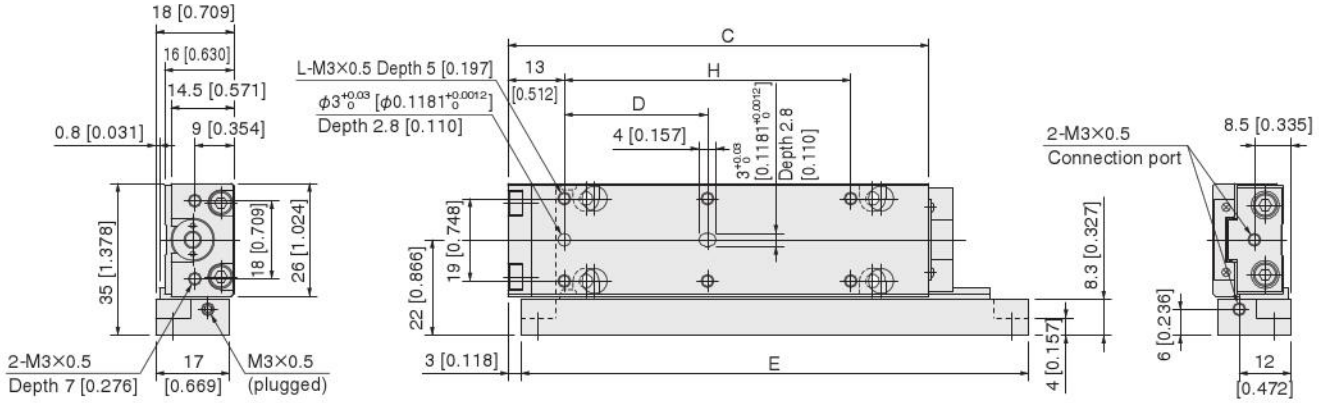

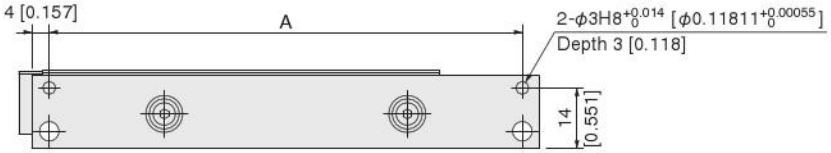

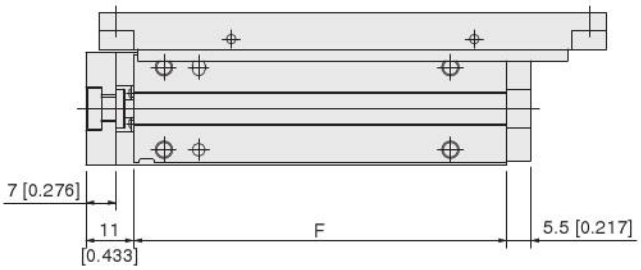

Locating pin: -P (P-MGA1)

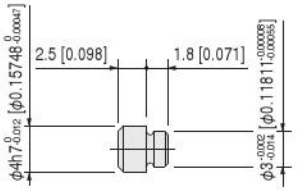

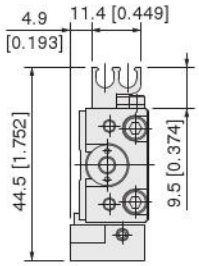

In the case of magnet and sensor rail installed

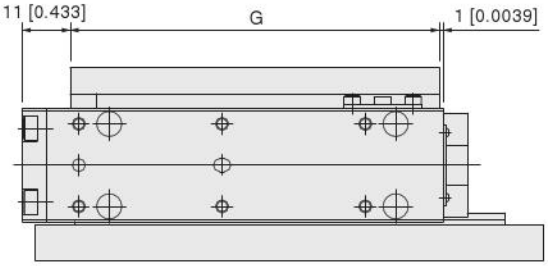

Stroke	A	B	C	D	E	F	G	H	I	J	K	L	M
5, 10	49 [1.929]	26 [1.024]	47 [1.850]	16 [0.630]	57 [2.244]	36 [1.417]	35 [1.378]	—	—	32 [1.260]	11 [0.433]	4	2
15, 20	59 [2.323]	36 [1.417]	57 [2.244]	26 [1.024]	67 [2.638]	46 [1.811]	45 [1.772]	—	—	42 [1.654]	11 [0.433]	4	2
25, 30	69 [2.717]	46 [1.811]	67 [2.638]	36 [1.417]	77 [3.031]	56 [2.205]	55 [2.165]	—	—	52 [2.047]	11 [0.433]	4	2
40, 50	109 [4.291]	76 [2.992]	97 [3.819]	33 [1.299]	117 [4.606]	86 [3.386]	85 [3.346]	66 [2.598]	62 [2.441]	72 [2.835]	21 [0.827]	6	3

● Side-mounted cylinder (left side)

MGAL□10×Stroke-L

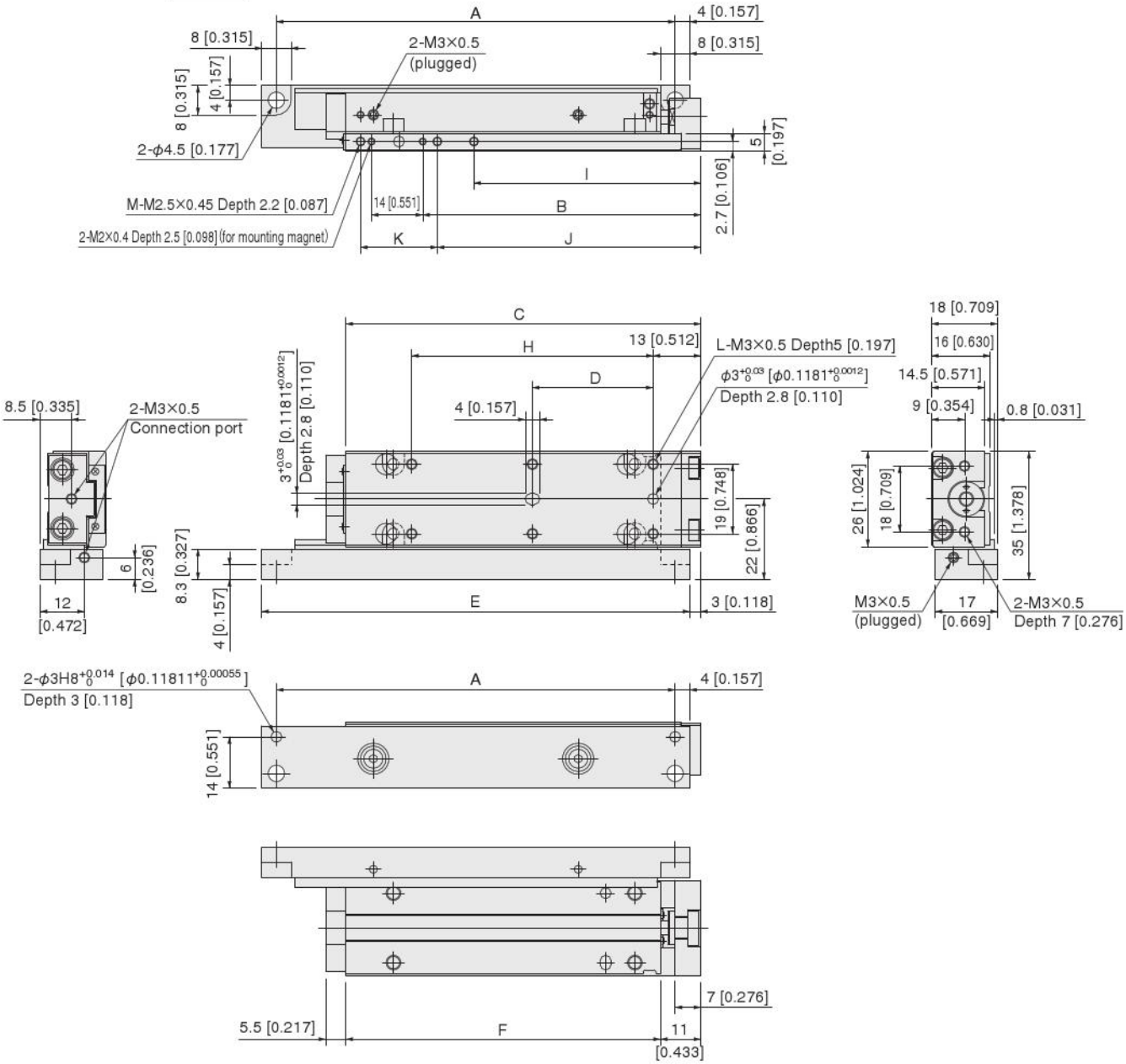

In the case of magnet and sensor rail installed

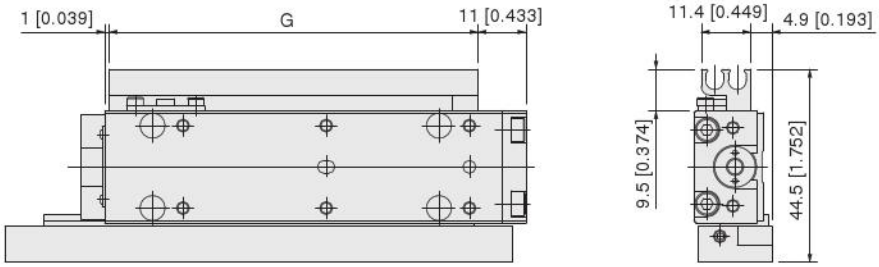

Locating pin: -P (P-MGA1)

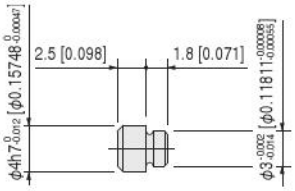

● Cylinder with buffer

MGAG10

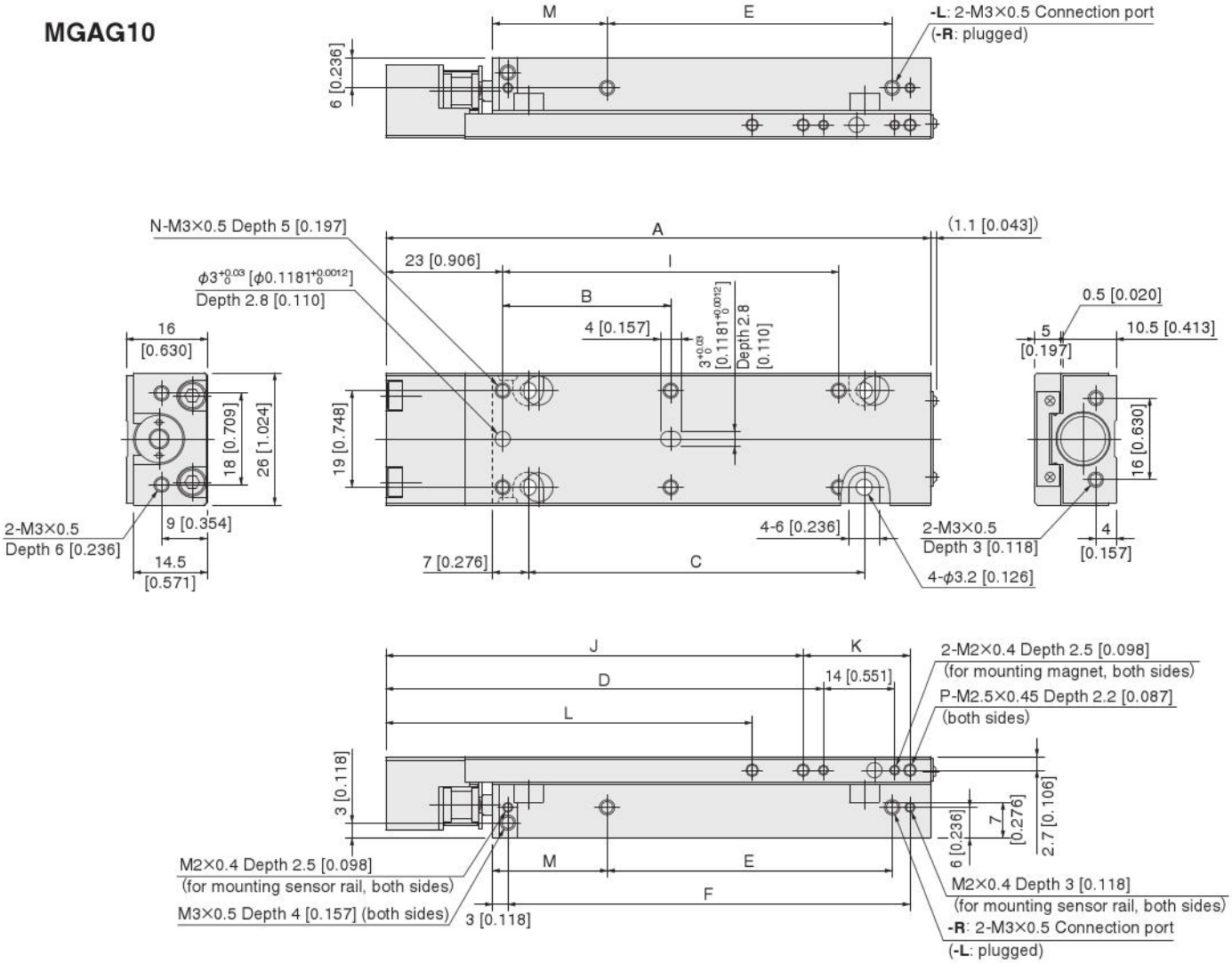

Stroke	A	B	C	D	E	F	G	H	I	J	K	L	M	N	P	R
5, 10	57 [2.244]	16 [0.630]	16 [0.630]	36 [1.417]	16 [0.630]	29 [1.142]	36 [1.417]	35 [1.378]	—	42 [1.654]	11 [0.433]	—	12.5 [0.492]	4	2	—
15, 20	67 [2.638]	26 [1.024]	26 [1.024]	46 [1.811]	26 [1.024]	39 [1.535]	46 [1.811]	45 [1.772]	—	52 [2.047]	11 [0.433]	—	12.5 [0.492]	4	2	—
25, 30	77 [3.031]	36 [1.417]	36 [1.417]	56 [2.205]	36 [1.417]	49 [1.929]	56 [2.205]	55 [2.165]	—	62 [2.441]	11 [0.433]	—	12.5 [0.492]	4	2	—
40, 50	107 [4.213]	33 [1.299]	66 [2.598]	86 [3.386]	56 [2.205]	79 [3.110]	86 [3.386]	85 [3.346]	66 [2.598]	82 [3.228]	21 [0.827]	72 [2.835]	22.5 [0.886]	6	3	50 [1.969]

Remark: The buffer stroke of ϕ10 cylinder with buffer is a maximum of 4 mm [0.157 in.].

Dimensions of Bore Size ϕ10 [0.394] mm [in.]

- **Cylinder with buffer, magnet and sensor rail MGAGS10**
- **Cylinder with buffer and shock absorber MGAG□10-SSR**

Piping direction: -R

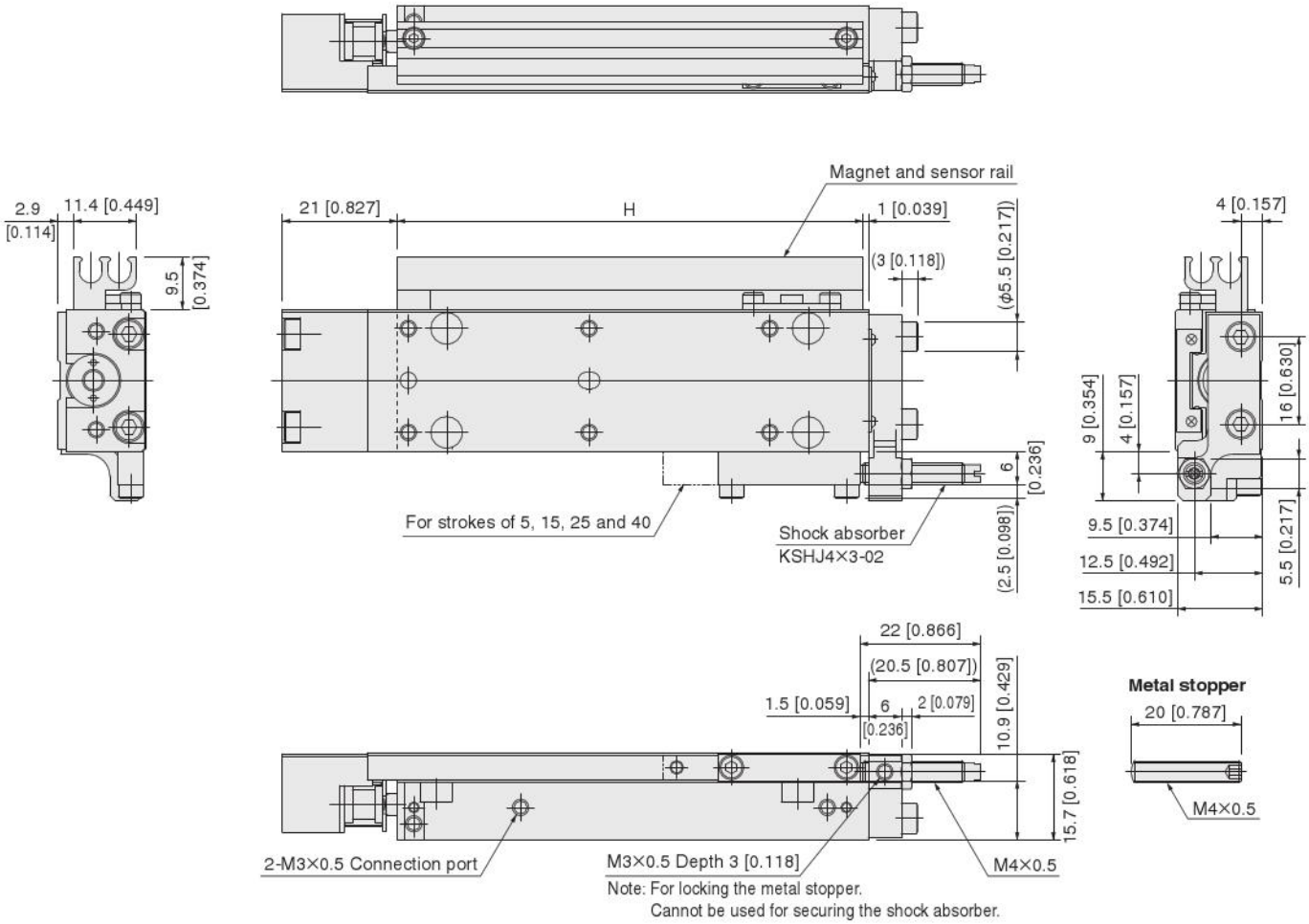

Piping direction: -L

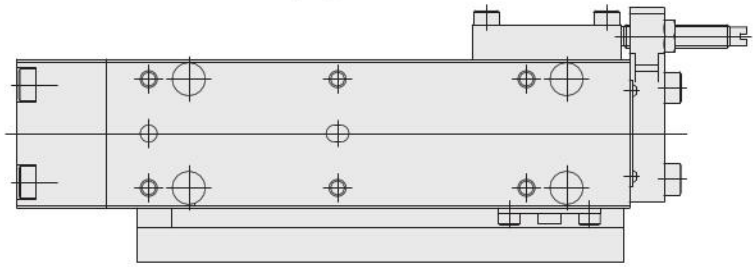

Locating pin: -P (P-MGA1)

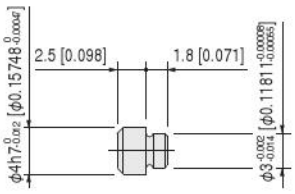

Remark: The buffer stroke of ϕ10 cylinder with buffer is a maximum of 4 mm [0.157 in.].

● Extended side stroke adjusting cylinder with buffer

MGAPG10

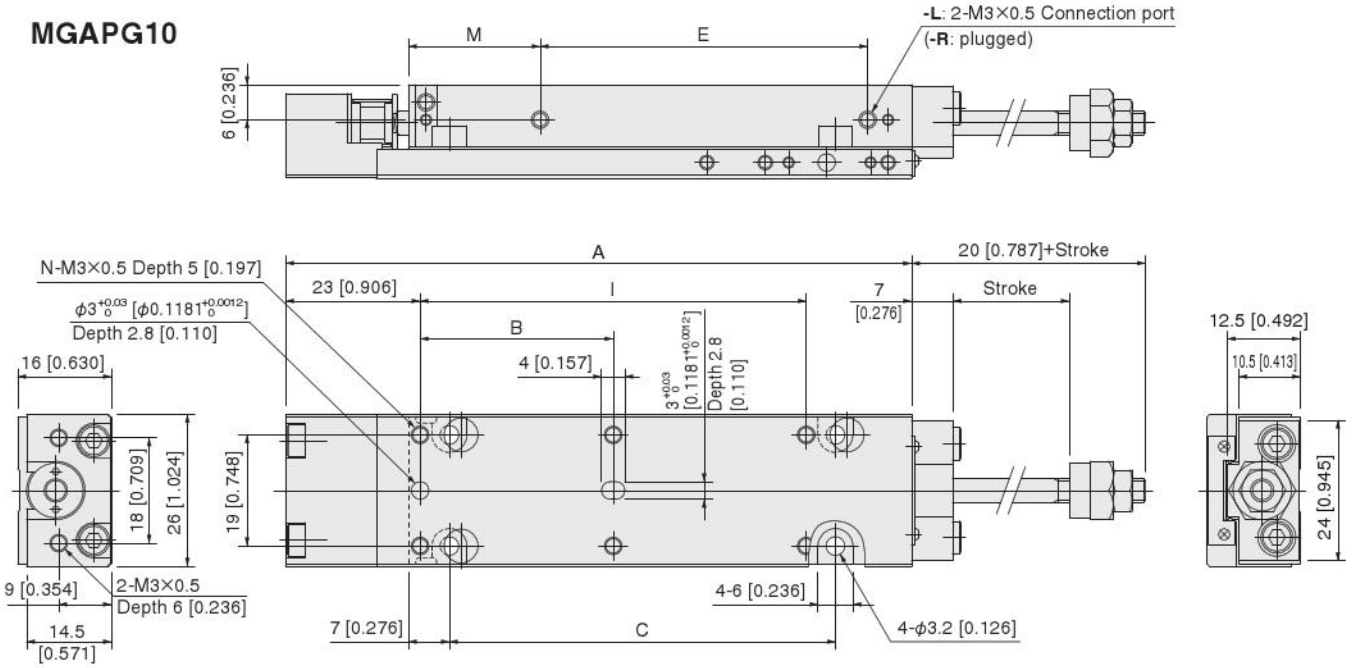

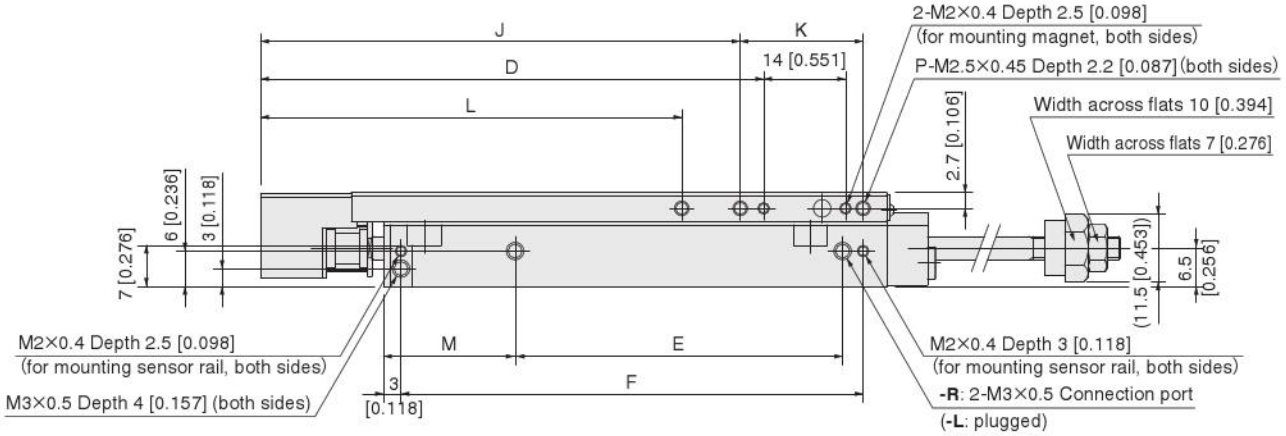

Locating pin: -P (P-MGA1)

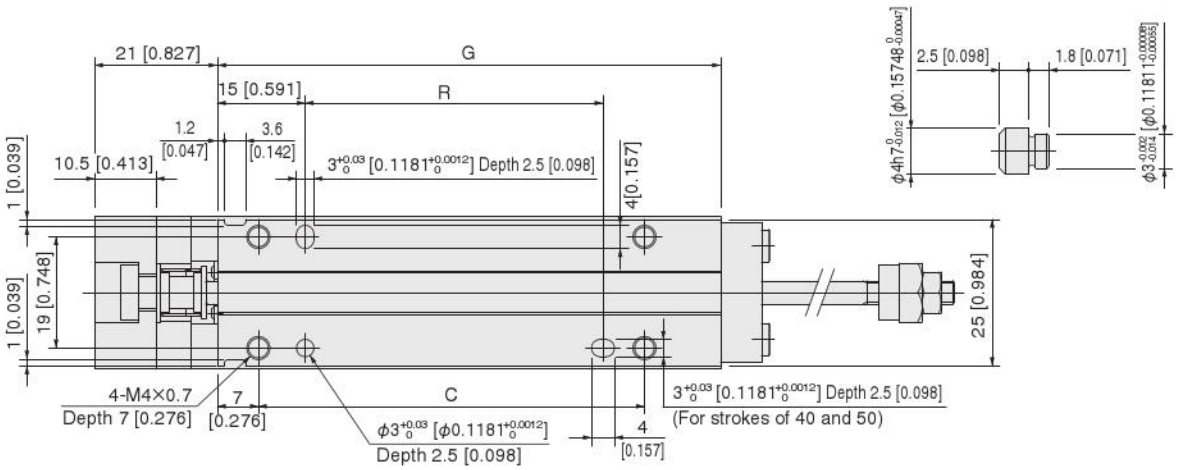

Stroke	A	B	C	D	E	F	G	H	I	J	K	L	M	N	P	R
5, 10	57 [2.244]	16 [0.630]	16 [0.630]	36 [1.417]	16 [0.630]	29 [1.142]	36 [1.417]	35 [1.378]	—	42 [1.654]	11 [0.433]	—	12.5 [0.492]	4	2	—
15, 20	67 [2.638]	26 [1.024]	26 [1.024]	46 [1.811]	26 [1.024]	39 [1.535]	46 [1.811]	45 [1.772]	—	52 [2.047]	11 [0.433]	—	12.5 [0.492]	4	2	—
25, 30	77 [3.031]	36 [1.417]	36 [1.417]	56 [2.205]	36 [1.417]	49 [1.929]	56 [2.205]	55 [2.165]	—	62 [2.441]	11 [0.433]	—	12.5 [0.492]	4	2	—
40, 50	107 [4.213]	33 [1.299]	66 [2.598]	86 [3.386]	56 [2.205]	79 [3.110]	86 [3.386]	85 [3.346]	66 [2.598]	82 [3.228]	21 [0.827]	72 [2.835]	22.5 [0.886]	6	3	50 [1.969]

Remark: The buffer stroke of ϕ10 cylinder with buffer is a maximum of 4 mm [0.157 in.].

● **Extended side stroke adjusting cylinder with buffer, magnet and sensor rail**

MGAPGS10

Piping direction: -R

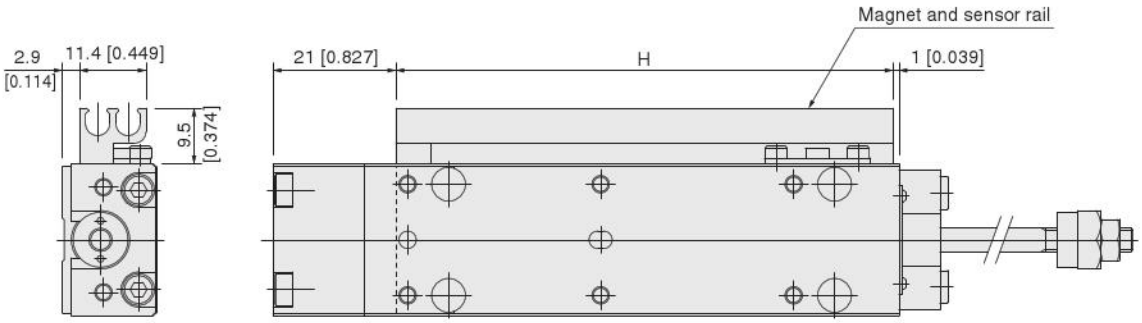

Piping direction: -L

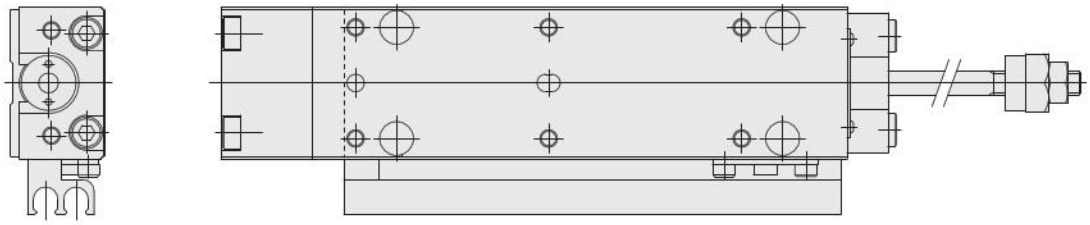

Locating pin: -P (P-MGA1)

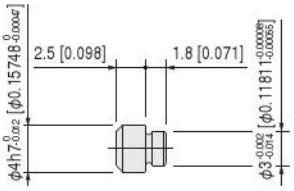

Remark: The buffer stroke of ϕ10 cylinder with buffer is a maximum of 4 mm [0.157 in.].

● Extended/retracted-side stroke adjusting cylinder with buffer

MGAEG10

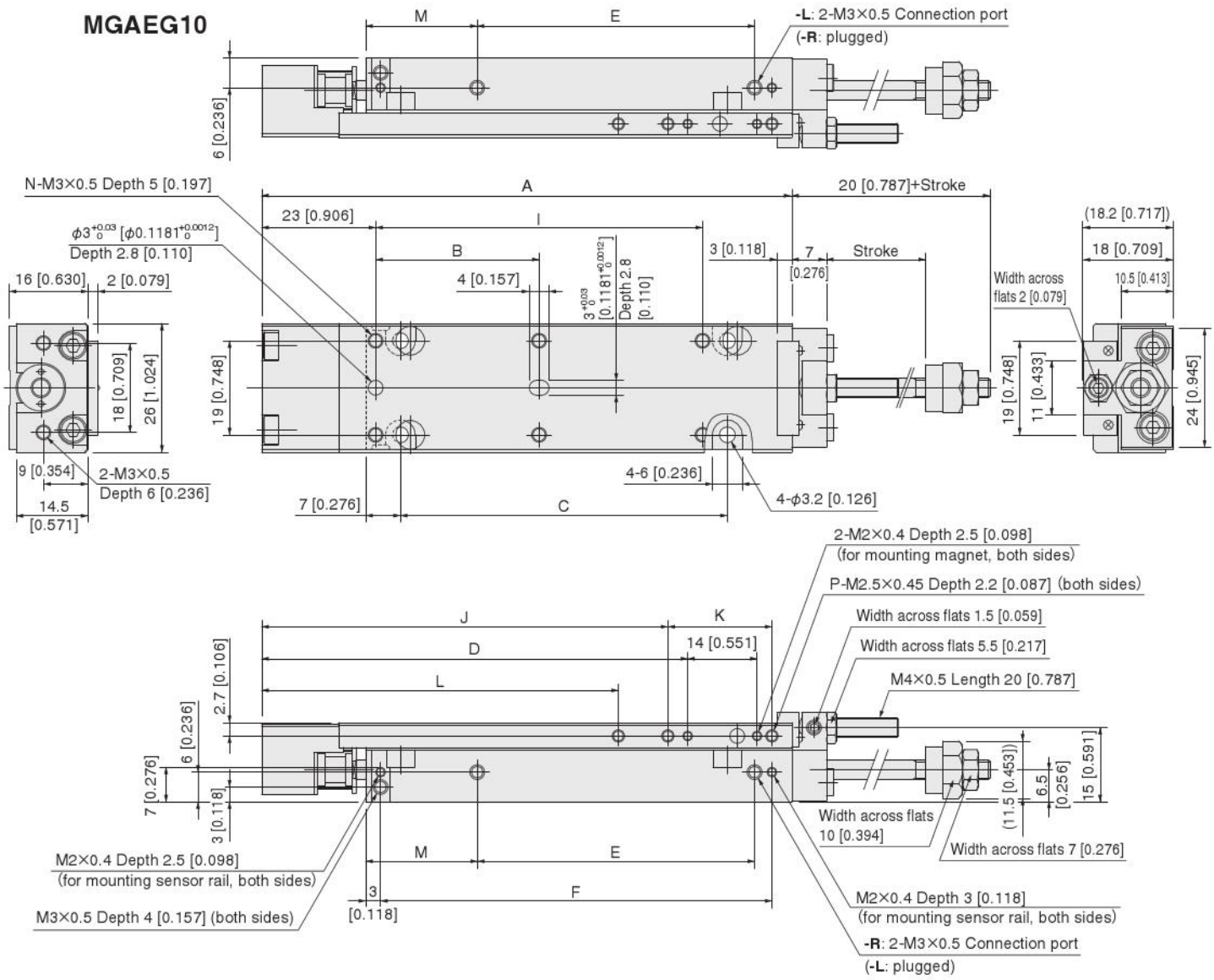

Locating pin: -P (P-MGA1)

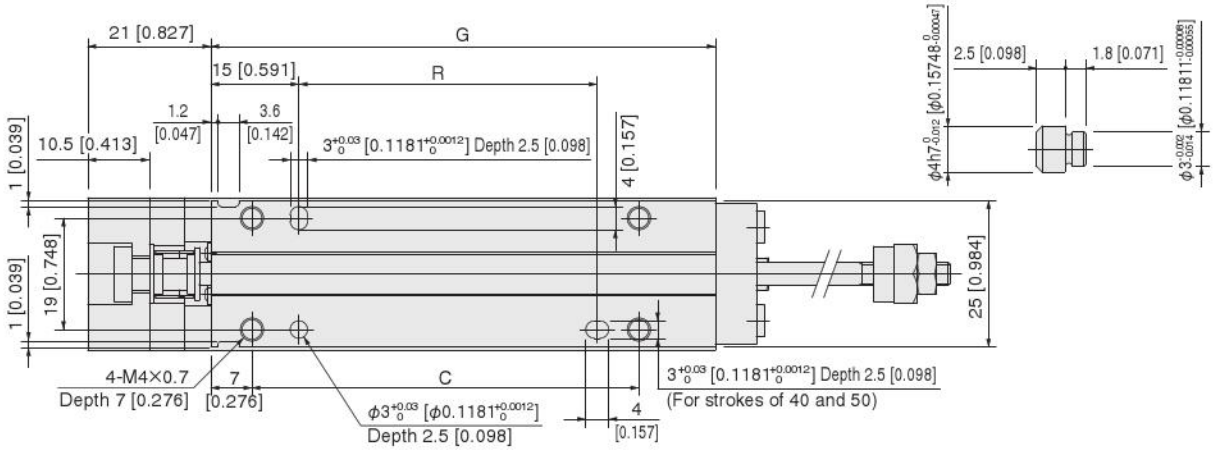

Stroke	A	B	C	D	E	F	G	H	I	J	K	L	M	N	P	R
5, 10	57 [2.244]	16 [0.630]	16 [0.630]	36 [1.417]	16 [0.630]	29 [1.142]	36 [1.417]	35 [1.378]	—	42 [1.654]	11 [0.433]	—	12.5 [0.492]	4	2	—
15, 20	67 [2.638]	26 [1.024]	26 [1.024]	46 [1.811]	26 [1.024]	39 [1.535]	46 [1.811]	45 [1.772]	—	52 [2.047]	11 [0.433]	—	12.5 [0.492]	4	2	—
25, 30	77 [3.031]	36 [1.417]	36 [1.417]	56 [2.205]	36 [1.417]	49 [1.929]	56 [2.205]	55 [2.165]	—	62 [2.441]	11 [0.433]	—	12.5 [0.492]	4	2	—
40, 50	107 [4.213]	33 [1.299]	66 [2.598]	86 [3.386]	56 [2.205]	79 [3.110]	86 [3.386]	85 [3.346]	66 [2.598]	82 [3.228]	21 [0.827]	72 [2.835]	22.5 [0.886]	6	3	50 [1.969]

Remark: The buffer stroke of ϕ10 cylinder with buffer is a maximum of 4 mm [0.157 in.].

Dimensions of Bore Size ϕ10 [0.394] mm [in.]

● **Extended/retracted-side stroke adjusting cylinder with buffer, magnet and sensor rail MGAEGS10**

● **Extended/retracted-side stroke adjusting cylinder with buffer and shock absorber MGAEG□10-SSR**

Piping direction: -R

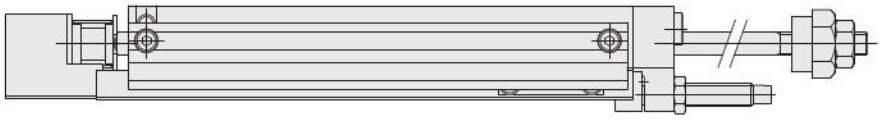

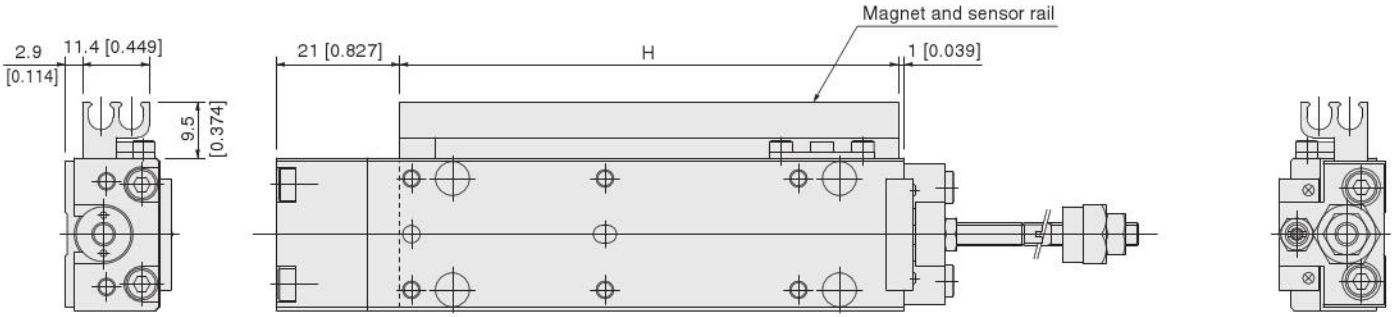

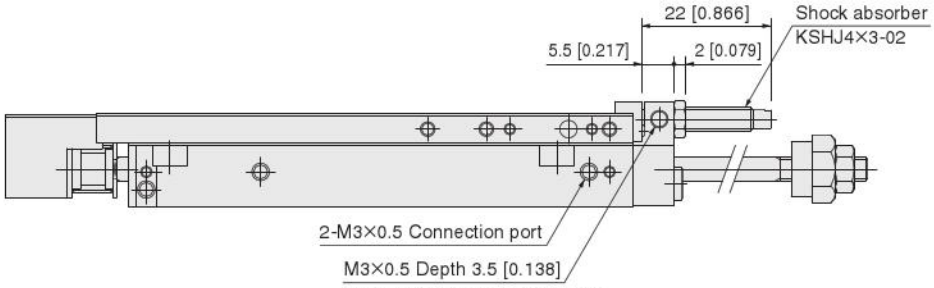

Note: For locking the metal stopper.
Cannot be used for securing the shock absorber.

Piping direction: -L

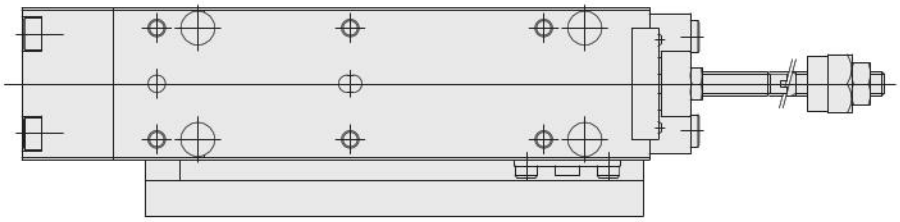

Locating pin: -P (P-MGA1)

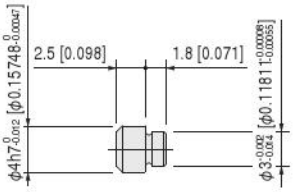

Remark: The buffer stroke of ϕ10 cylinder with buffer is a maximum of 4 mm [0.157 in.].

● Side-mounted cylinder with buffer (right side)

MGALG□10×Stroke-R

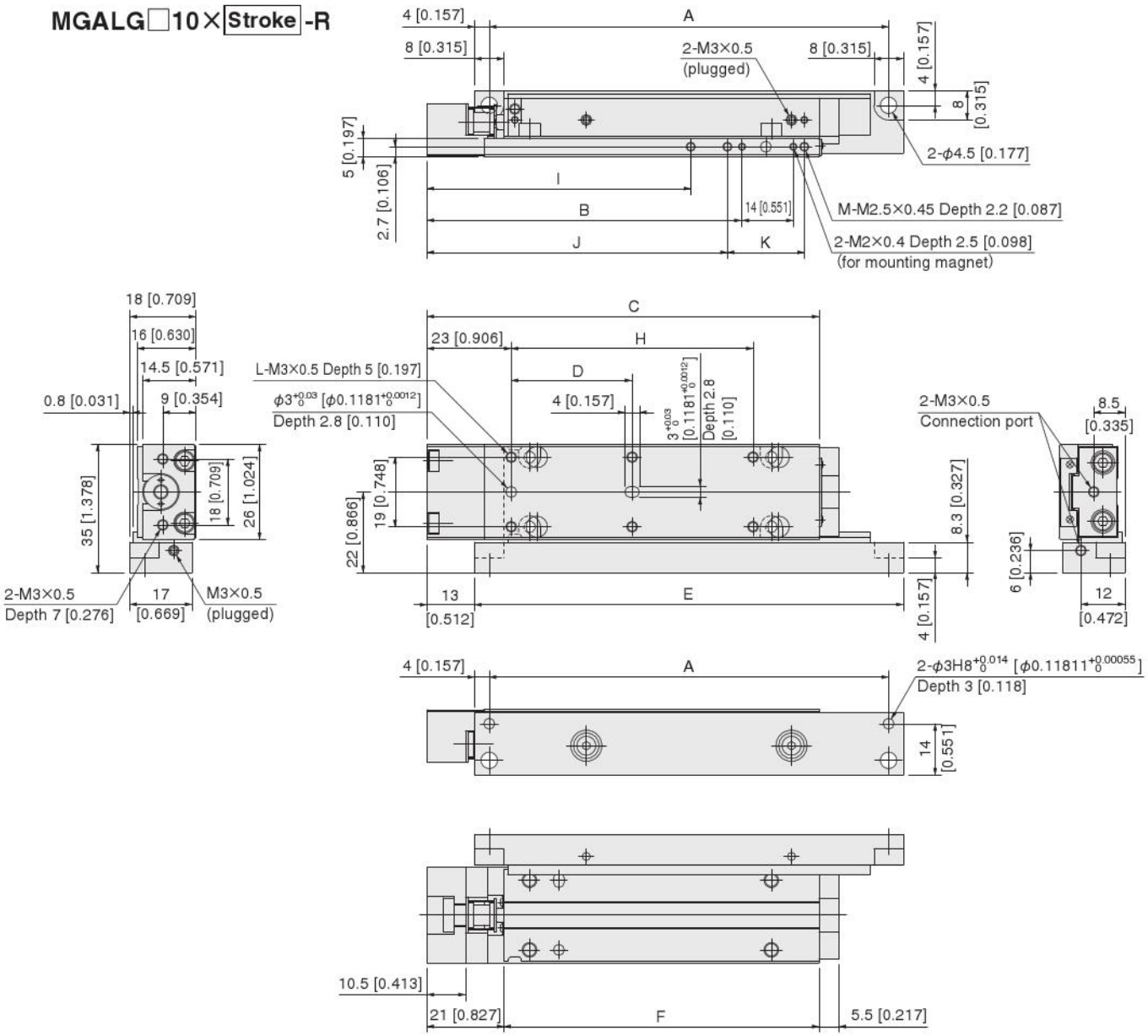

Locating pin: -P (P-MGA1)

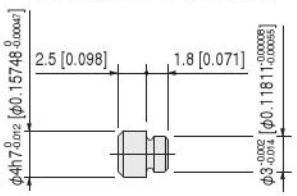

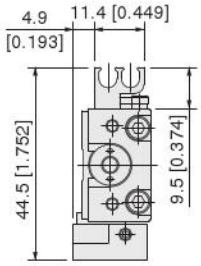

In the case of magnet and sensor rail installed

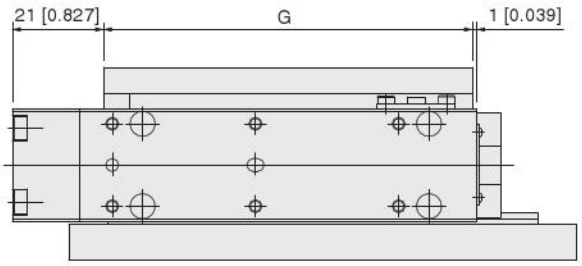

Stroke	A	B	C	D	E	F	G	H	I	J	K	L	M
5, 10	49 [1.929]	36 [1.417]	57 [2.244]	16 [0.630]	57 [2.244]	36 [1.417]	35 [1.378]	—	—	42 [1.654]	11 [0.433]	4	2
15, 20	59 [2.323]	46 [1.811]	67 [2.638]	26 [1.024]	67 [2.638]	46 [1.811]	45 [1.772]	—	—	52 [2.047]	11 [0.433]	4	2
25, 30	69 [2.717]	56 [2.205]	77 [3.031]	36 [1.417]	77 [3.031]	56 [2.205]	55 [2.165]	—	—	62 [2.441]	11 [0.433]	4	2
40, 50	109 [4.291]	86 [3.386]	107 [4.213]	33 [1.299]	117 [4.606]	86 [3.386]	85 [3.346]	66 [2.598]	72 [2.835]	82 [3.228]	21 [0.827]	6	3

● Side-mounted cylinder with buffer (left side)

MGALG□10×Stroke-L

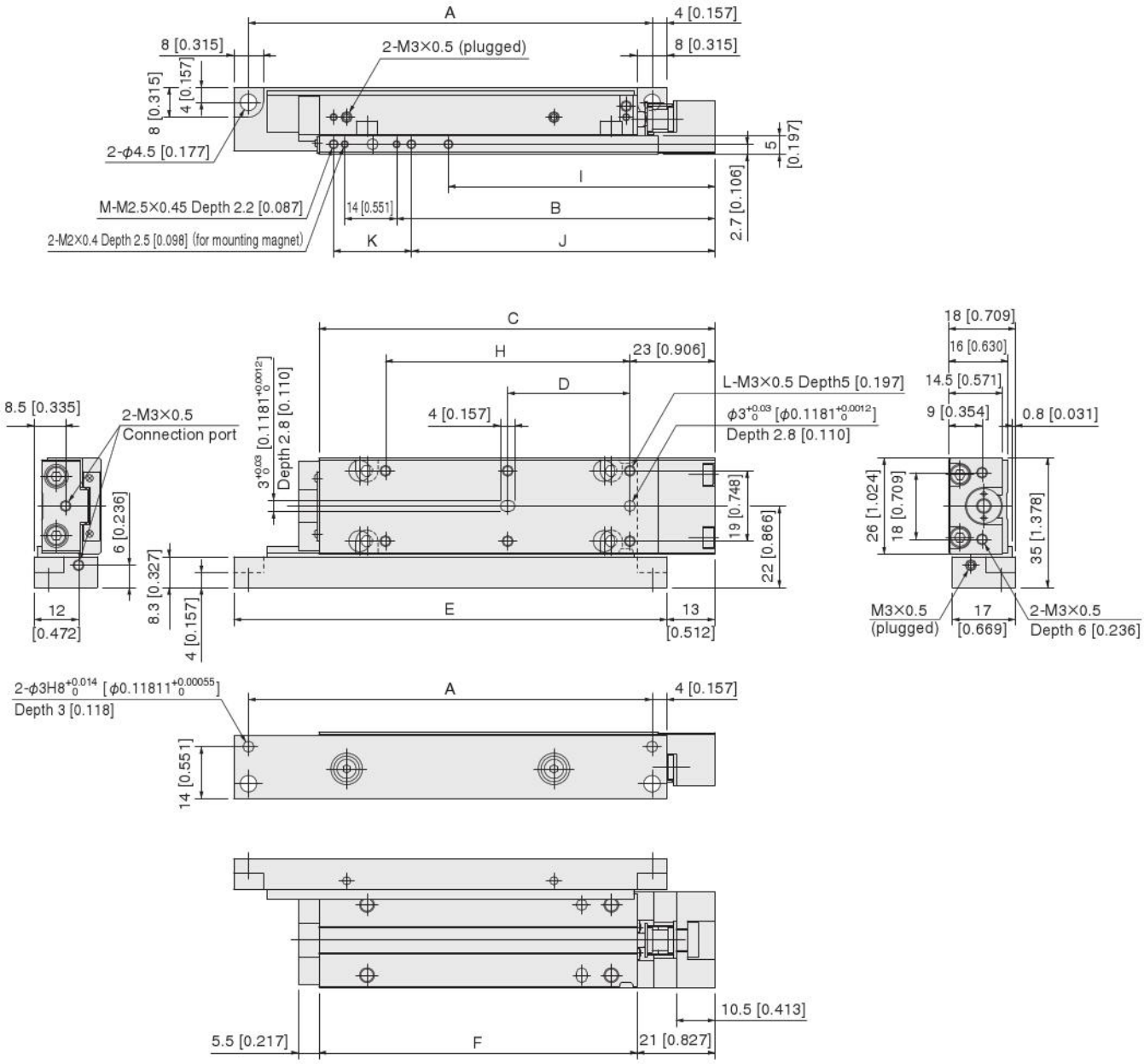

In the case of magnet and sensor rail installed

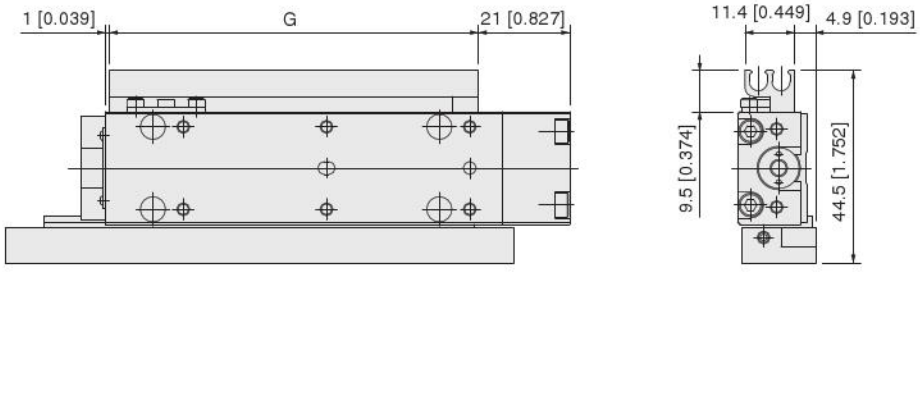

Locating pin: -P (P-MGA1)

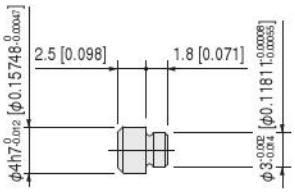

Remark: The buffer stroke of ϕ10 cylinder with buffer is a maximum of 4 mm [0.157 in.].

● Standard cylinder, rear piping specifications

MGAH□10

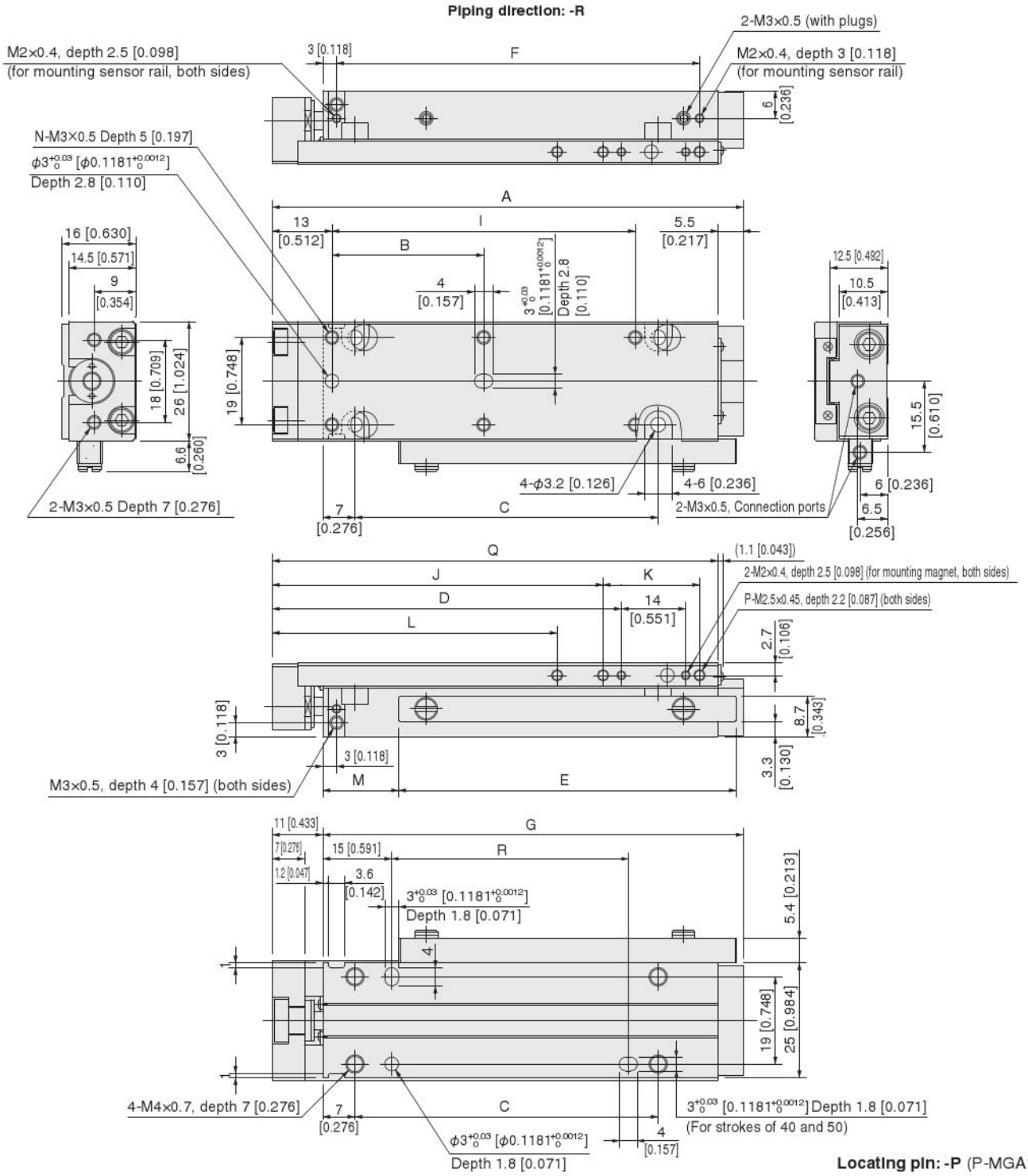

Locating pin: -P (P-MGA1)

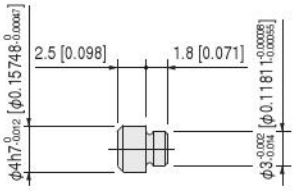

Stroke	A	B	C	D	E	F	G	H	I	J	K	L	M	N	P	Q	R
5, 10	52.5 [2.067]	16 [0.630]	16 [0.630]	26 [1.024]	33.5 [1.319]	29 [1.142]	41.5 [1.634]	35 [1.378]	—	32 [1.260]	11 [0.433]	—	6.5 [0.256]	4 [0.157]	2 [0.079]	47 [1.850]	—
15, 20	62.5 [2.461]	26 [1.024]	26 [1.024]	36 [1.417]	43.5 [1.713]	39 [1.535]	51.5 [2.028]	45 [1.772]	—	42 [1.654]	11 [0.433]	—	6.5 [0.256]	4 [0.157]	2 [0.079]	57 [2.244]	—
25, 30	72.5 [2.854]	36 [1.417]	36 [1.417]	46 [1.811]	53.5 [2.106]	49 [1.929]	61.5 [2.421]	55 [2.165]	—	52 [2.047]	11 [0.433]	—	6.5 [0.256]	4 [0.157]	2 [0.079]	67 [2.638]	—
40, 50	102.5 [4.035]	33 [1.299]	66 [2.598]	76 [2.992]	73.5 [2.894]	79 [3.110]	91.5 [3.602]	85 [3.346]	66 [2.598]	72 [2.835]	21 [0.827]	62 [2.441]	16.5 [0.650]	6 [0.236]	3 [0.118]	97 [3.819]	50 [1.969]

● **Cylinder with magnet and sensor rail MGAHS10**

● **Cylinder with shock absorber MGAH□10-SSF**

Piping direction: -R

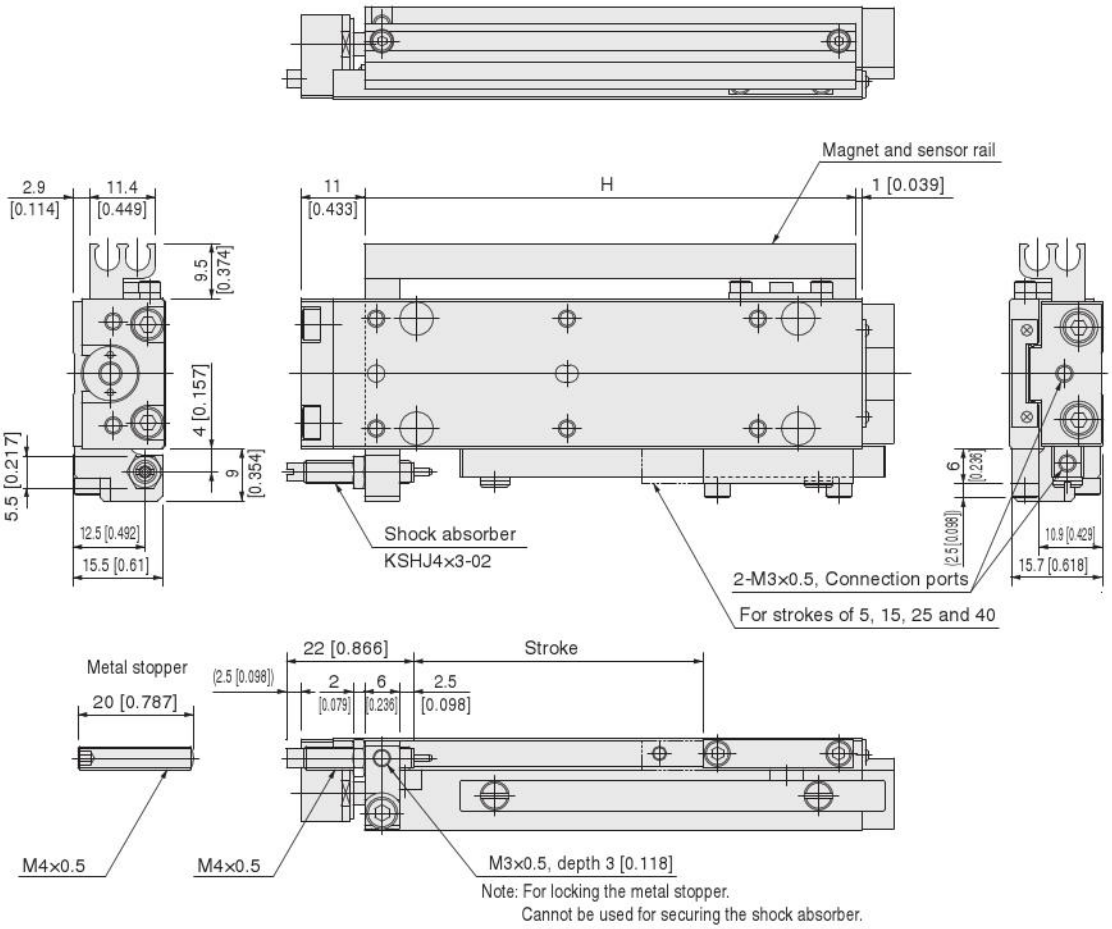

Piping direction: -L

Without options

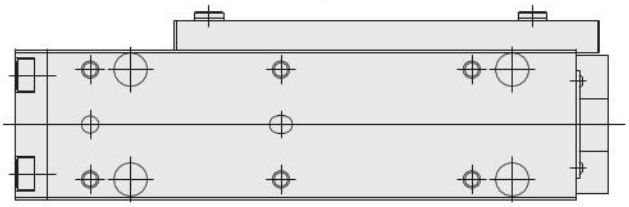

With sensor rail and shock absorber

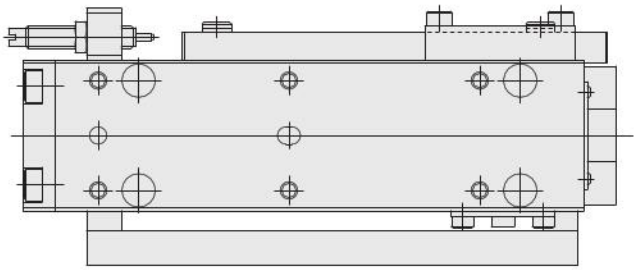

Locating pin: -P (P-MGA1)

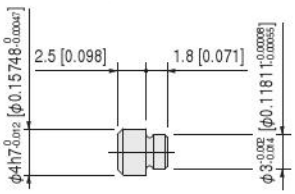

● Cylinder with buffer, rear piping specifications

MGAGH10

Piping direction: -R

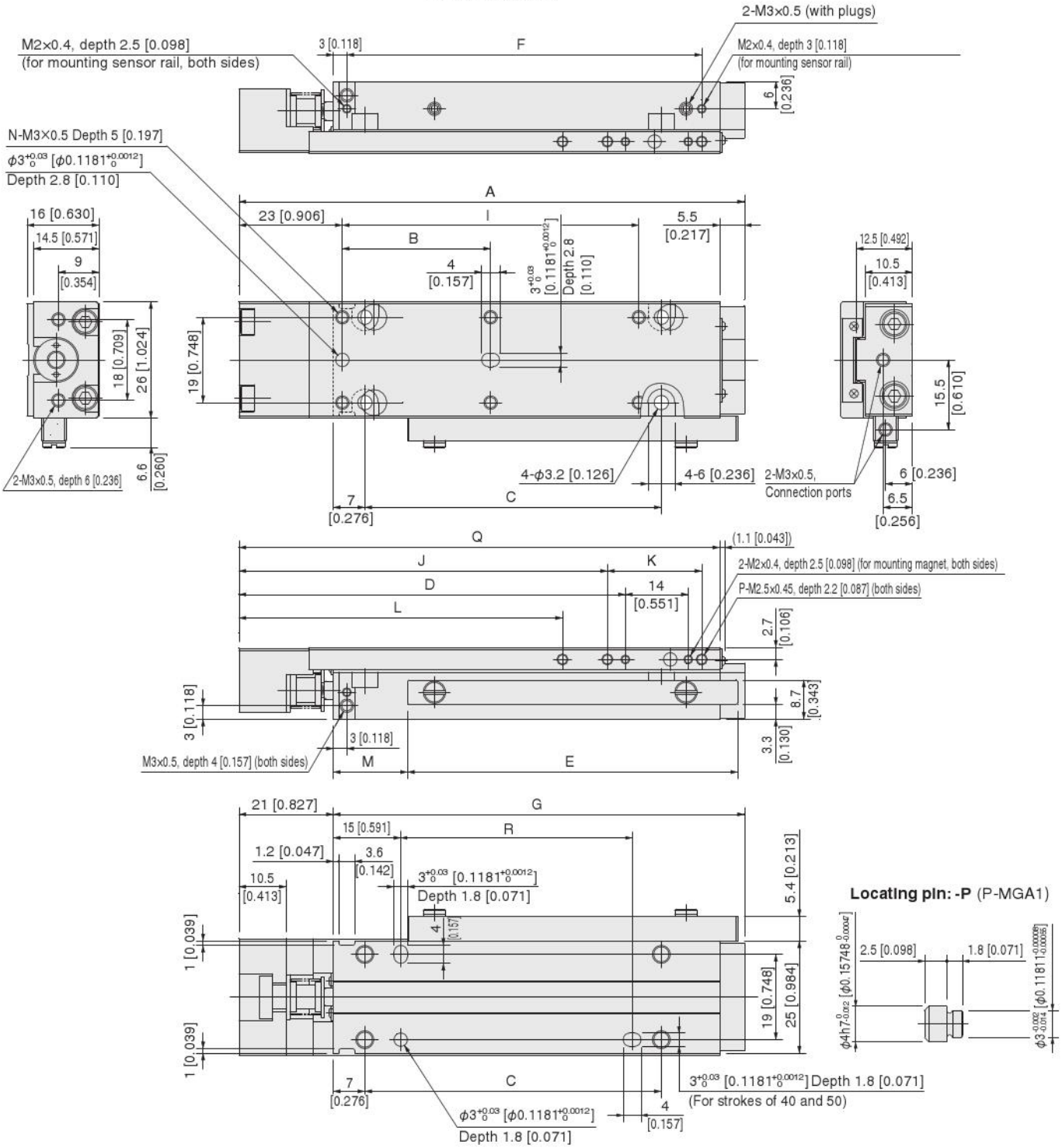

Stroke	A	B	C	D	E	F	G	H	I	J	K	L	M	N	P	Q	R
5, 10	62.5 [2.461]	6 [0.236]	16 [0.630]	36 [1.417]	33.5 [1.319]	29 [1.142]	41.5 [1.634]	35 [1.378]	—	42 [1.654]	11 [0.433]	—	6.5 [0.256]	4	2 [0.079]	57 [2.244]	—
15, 20	72.5 [2.854]	26 [1.024]	26 [1.024]	46 [1.811]	43.5 [1.713]	39 [1.535]	51.5 [2.028]	45 [1.772]	—	52 [2.047]	11 [0.433]	—	6.5 [0.256]	4	2 [0.079]	67 [2.638]	—
25, 30	82.5 [3.248]	36 [1.417]	36 [1.417]	56 [2.205]	53.5 [2.106]	49 [1.929]	61.5 [2.421]	55 [2.165]	—	62 [2.441]	11 [0.433]	—	6.5 [0.256]	4	2 [0.079]	77 [3.031]	—
40, 50	112.5 [4.429]	33 [1.299]	66 [2.598]	86 [3.386]	73.5 [2.894]	79 [3.110]	91.5 [3.602]	85 [3.346]	66 [2.598]	82 [3.228]	21 [0.827]	72 [2.835]	16.5 [0.650]	6	3 [0.118]	107 [4.213]	50 [1.969]

Remark: The buffer stroke of ϕ10 cylinder with buffer is a maximum of 4 mm [0.157 in.].

●Cylinder with buffer, magnet and sensor rail

MGAGHS10

Piping direction: -R

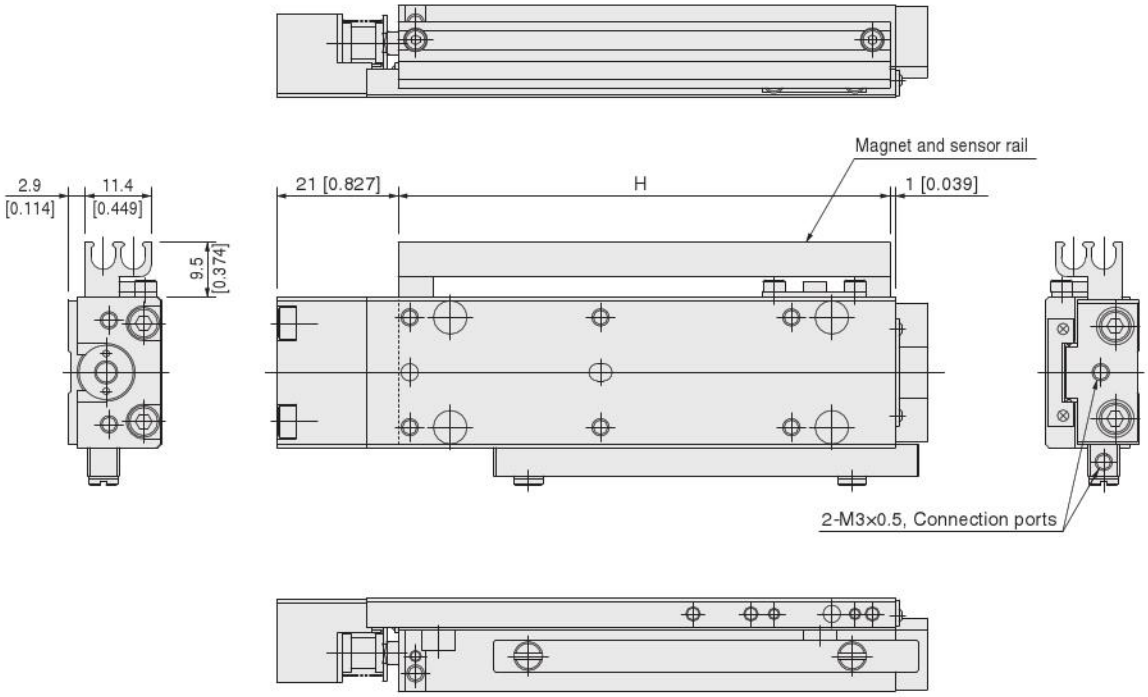

Piping direction: -L

Without options

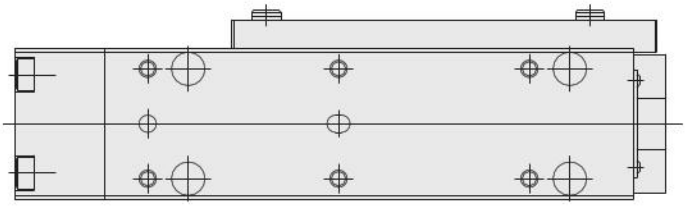

With magnet and sensor rail

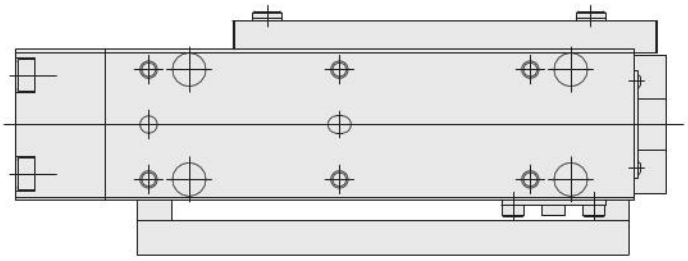

Locating pin: -P (P-MGA1)

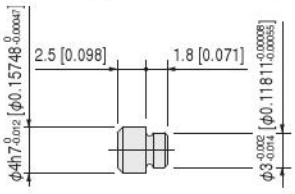

Remark: The buffer stroke of ϕ10 cylinder with buffer is a maximum of 4 mm [0.157 in.].

● Standard cylinder

MGA12

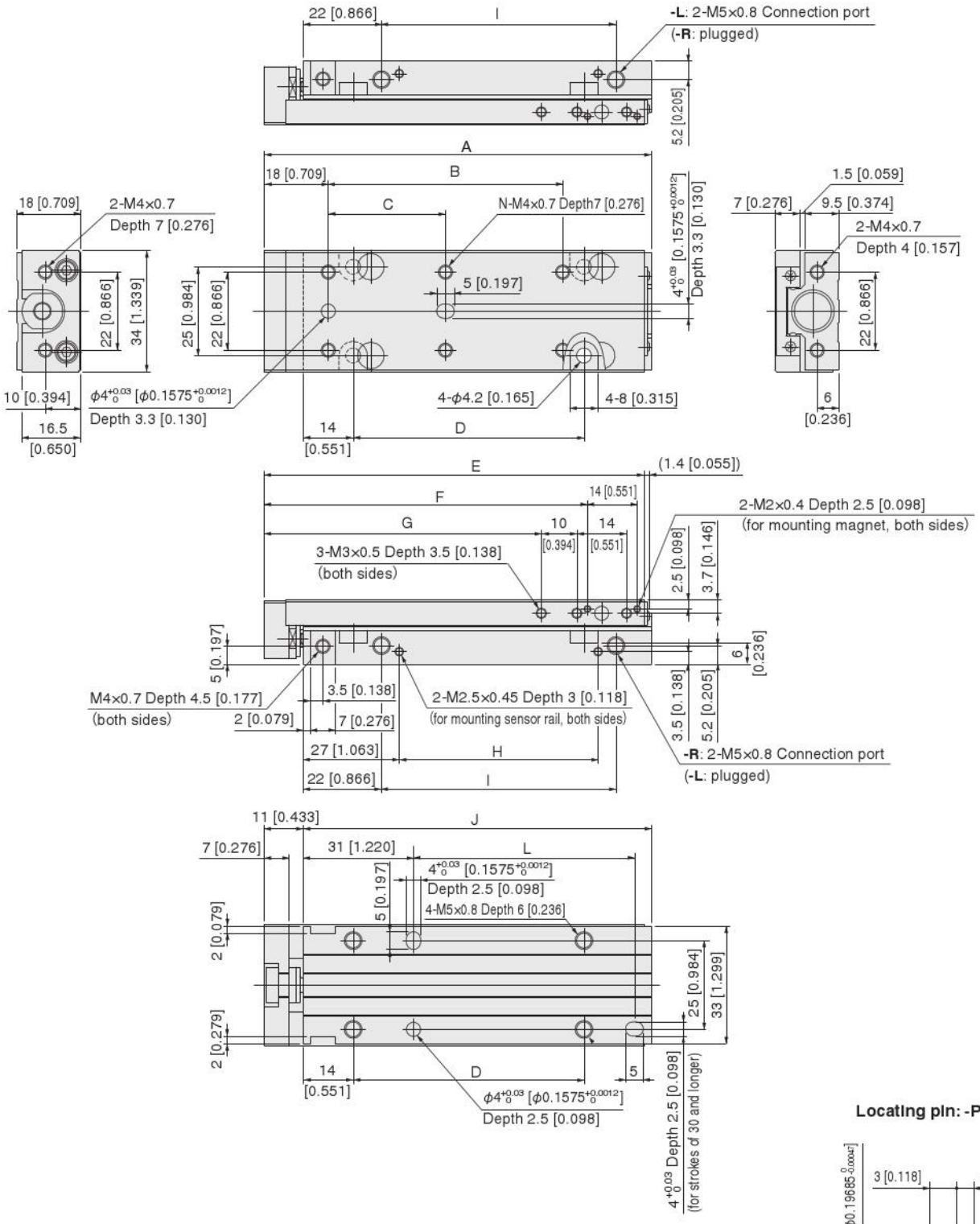

Stroke	A	B	C	D	E	F	G	H	I	J	K	L	N
10, 15, 20	69 [2.717]	—	26 [1.024]	25 [0.984]	67 [2.638]	51 [2.008]	38 [1.496]	16 [0.630]	26 [1.024]	58 [2.283]	45 [1.772]	—	4
30, 40	89 [3.504]	—	46 [1.811]	45 [1.772]	87 [3.425]	71 [2.795]	58 [2.283]	36 [1.417]	46 [1.811]	78 [3.071]	65 [2.559]	42 [1.654]	4
50, 60	109 [4.291]	66 [2.598]	33 [1.299]	65 [2.559]	107 [4.213]	91 [3.583]	78 [3.071]	56 [2.205]	66 [2.598]	98 [3.858]	85 [3.346]	62 [2.441]	6
70, 80	129 [5.079]	86 [3.386]	43 [1.693]	85 [3.346]	127 [5.000]	111 [4.370]	98 [3.858]	76 [2.992]	86 [3.386]	118 [4.646]	105 [4.134]	82 [3.228]	6

Dimensions of Bore Size ϕ12 [0.472] mm [in.]

● **Cylinder with magnet and sensor rail MGAS12**

● **Cylinder with shock absorber MGA□12-SS□**

Piping direction: -R

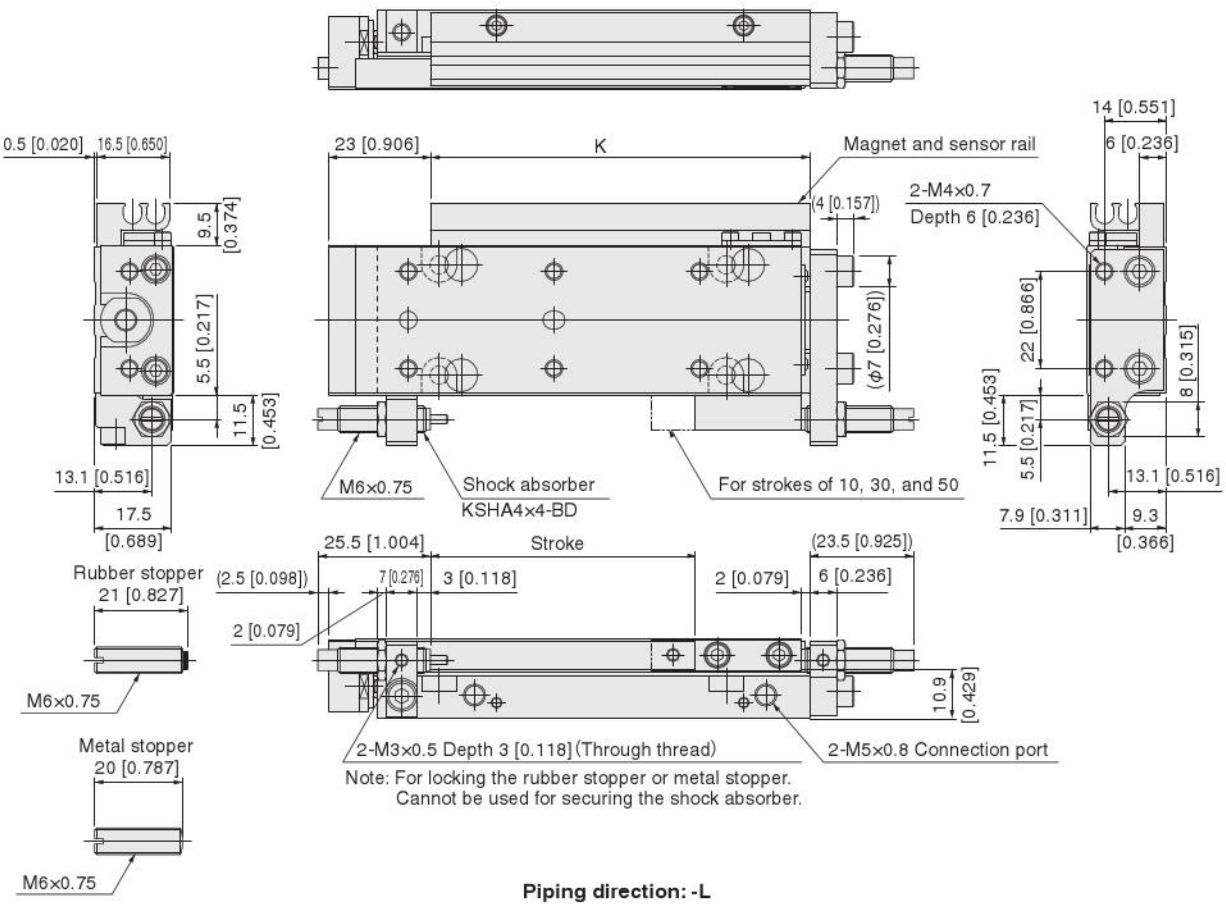

Piping direction: -L

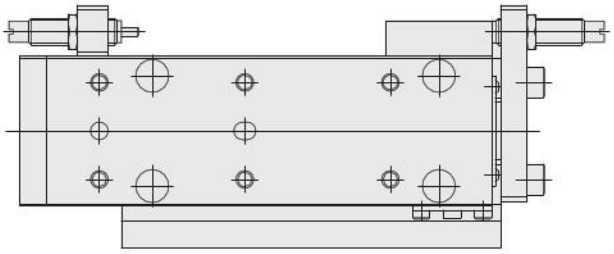

Locating pin: -P (P-MGA2)

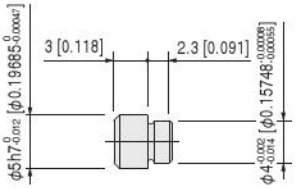

● Extended side stroke adjusting cylinder

MGAP12

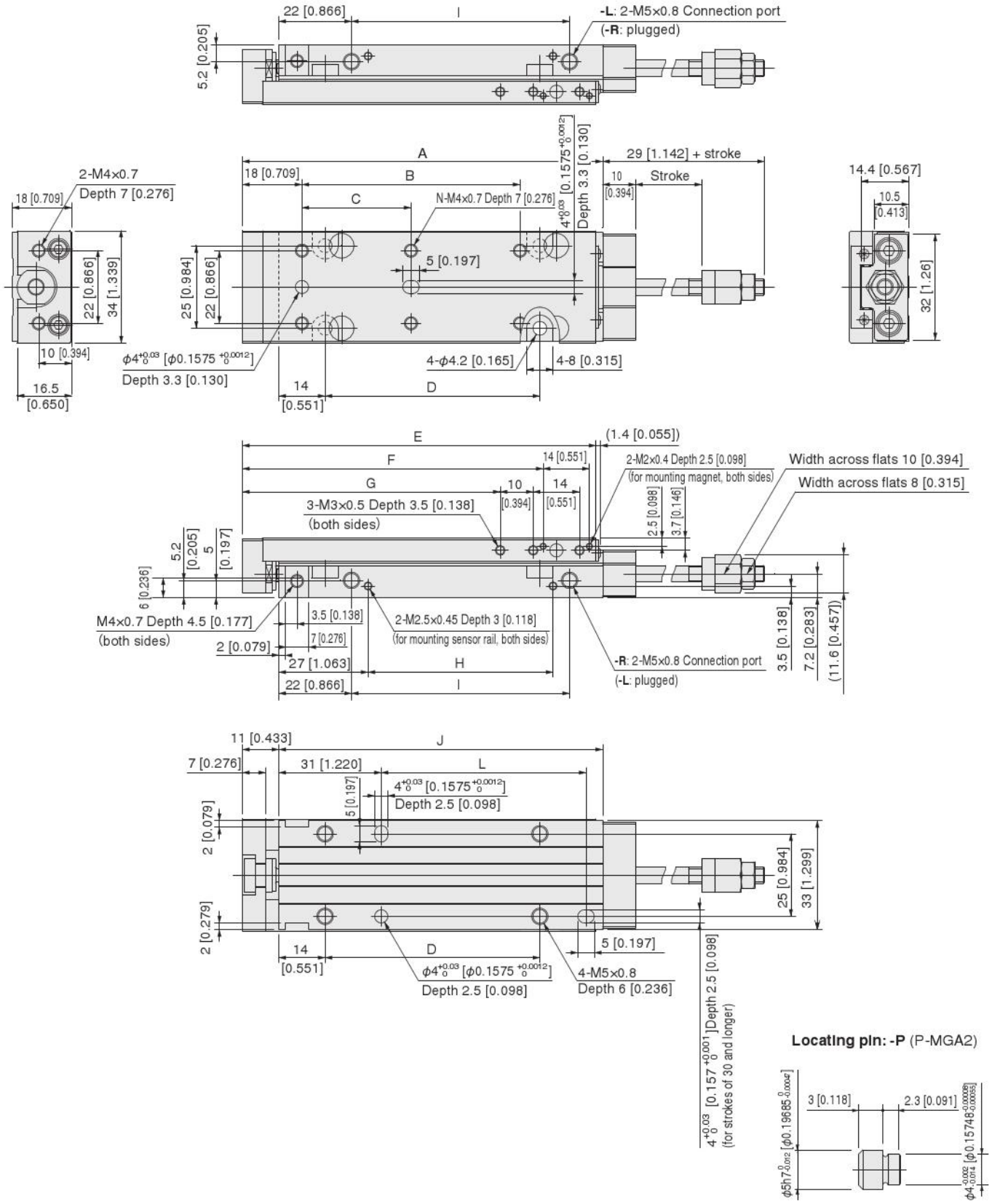

Stroke	A	B	C	D	E	F	G	H	I	J	K	L	N
10, 15, 20	69 [2.717]	—	26 [1.024]	25 [0.984]	67 [2.638]	51 [2.008]	38 [1.496]	16 [0.630]	26 [1.024]	58 [2.283]	45 [1.772]	—	4
30, 40	89 [3.504]	—	46 [1.811]	45 [1.772]	87 [3.425]	71 [2.795]	58 [2.283]	36 [1.417]	46 [1.811]	78 [3.071]	65 [2.559]	42 [1.654]	4
50, 60	109 [4.291]	66 [2.598]	33 [1.299]	65 [2.559]	107 [4.213]	91 [3.583]	78 [3.071]	56 [2.205]	66 [2.598]	98 [3.858]	85 [3.346]	62 [2.441]	6
70, 80	129 [5.079]	86 [3.386]	43 [1.693]	85 [3.346]	127 [5.000]	111 [4.370]	98 [3.858]	76 [2.992]	86 [3.386]	118 [4.646]	105 [4.134]	82 [3.228]	6

- **Extended side stroke adjusting cylinder with magnet and sensor rail MGAPS12**
- **Extended side stroke adjusting cylinder with shock absorber MGAP□12-SSF**

Piping direction: -R

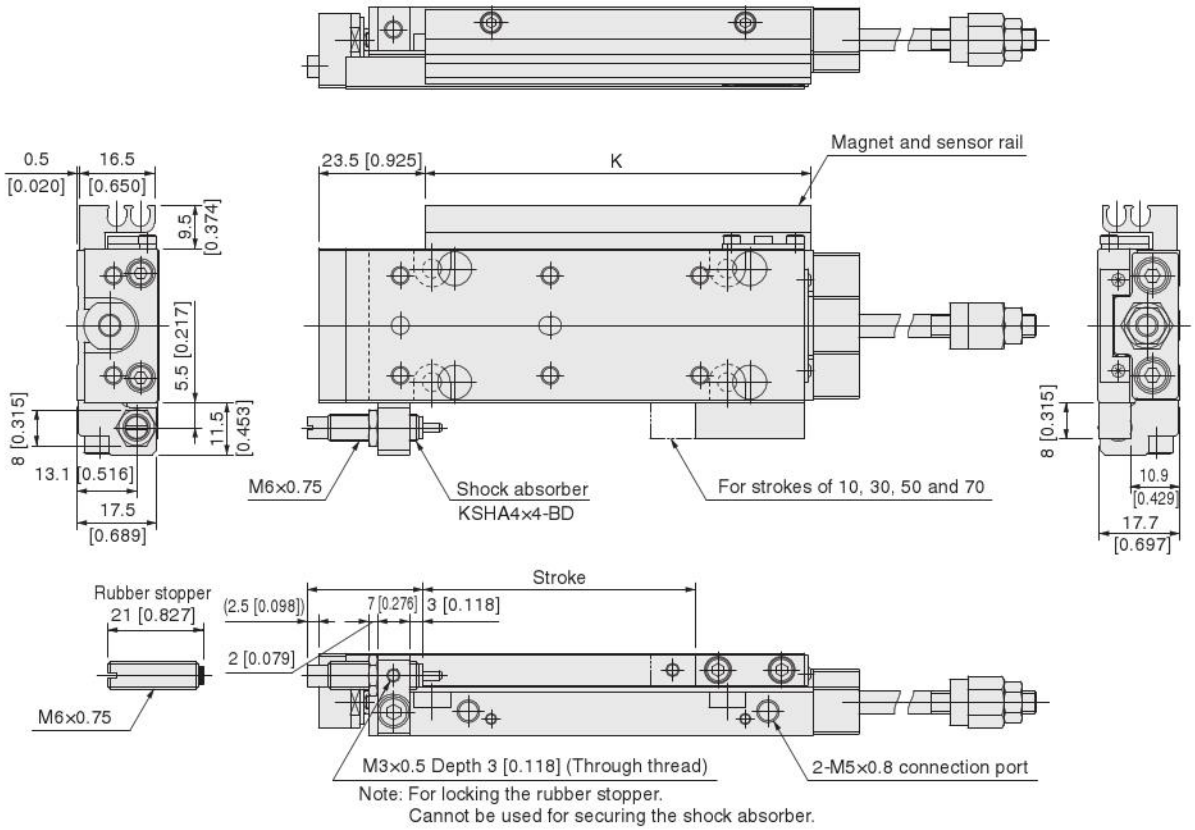

Piping direction: -L

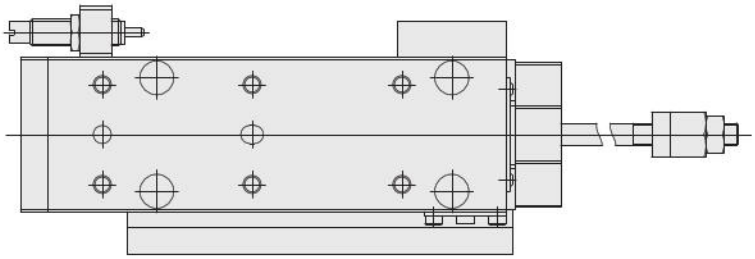

Locating pin: -P (P-MGA2)

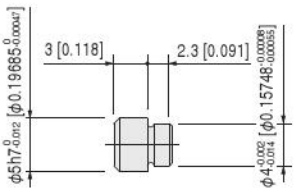

● Extended/retracted-side stroke adjusting cylinder

MGAE12

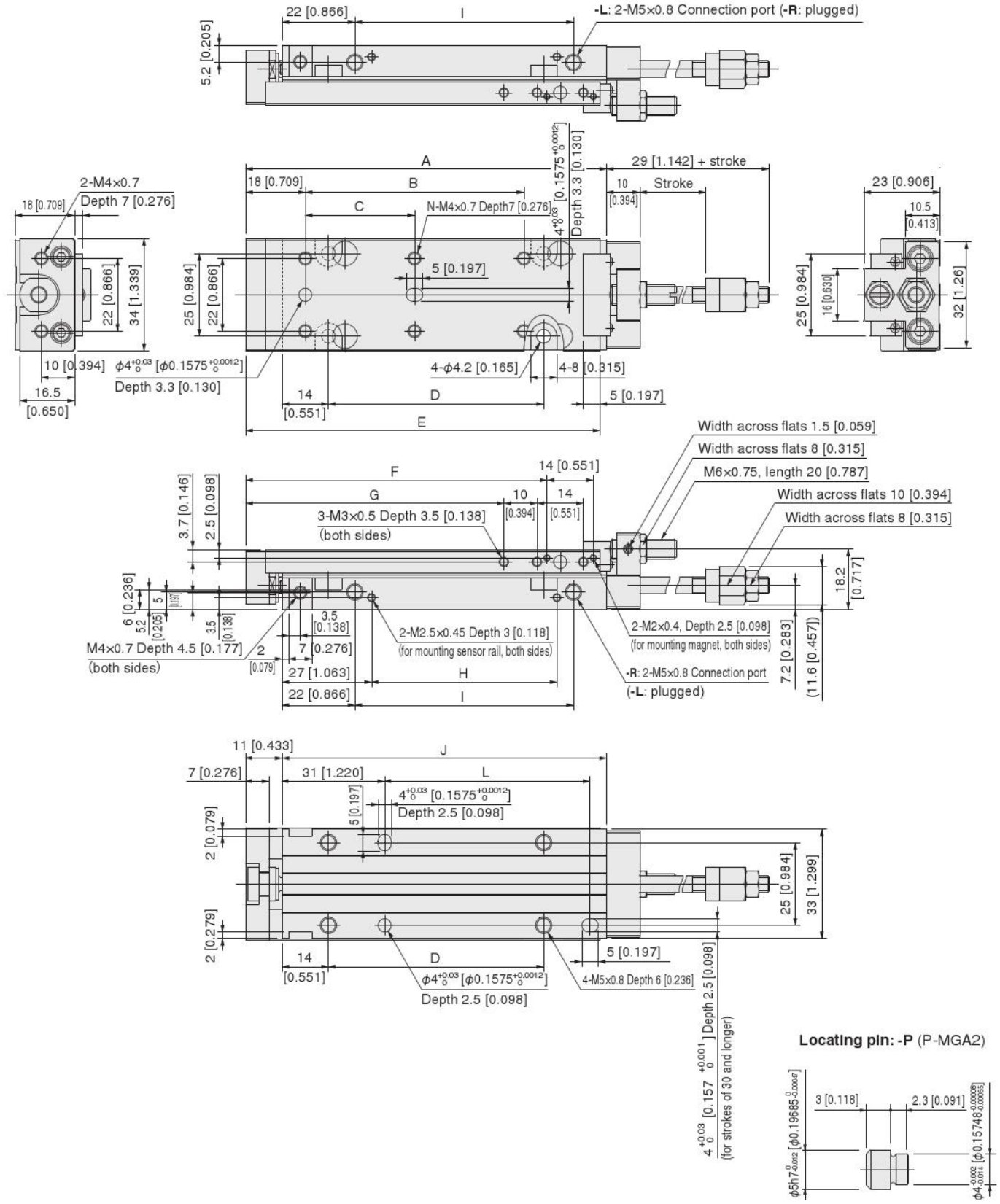

Stroke	A	B	C	D	E	F	G	H	I	J	K	L
10, 15, 20	69 [2.717]	—	26 [1.024]	25 [0.984]	67 [2.638]	51 [2.008]	38 [1.496]	16 [0.630]	26 [1.024]	58 [2.283]	45 [1.772]	—
30, 40	89 [3.504]	—	46 [1.811]	45 [1.772]	87 [3.425]	71 [2.795]	58 [2.283]	36 [1.417]	46 [1.811]	78 [3.071]	65 [2.559]	42 [1.654]
50, 60	109 [4.291]	66 [2.598]	33 [1.299]	65 [2.559]	107 [4.213]	91 [3.583]	78 [3.071]	56 [2.205]	66 [2.598]	98 [3.858]	85 [3.346]	62 [2.441]
70, 80	129 [5.079]	86 [3.386]	43 [1.693]	85 [3.346]	127 [5.000]	111 [4.370]	98 [3.858]	76 [2.992]	86 [3.386]	118 [4.646]	105 [4.134]	82 [3.228]

● **Extended/retracted-side stroke adjusting cylinder with magnet and sensor rail MGAES12**

● **Extended/retracted-side stroke adjusting cylinder with shock absorber MGAE□12-SS□**

Piping direction: -R, -SS2

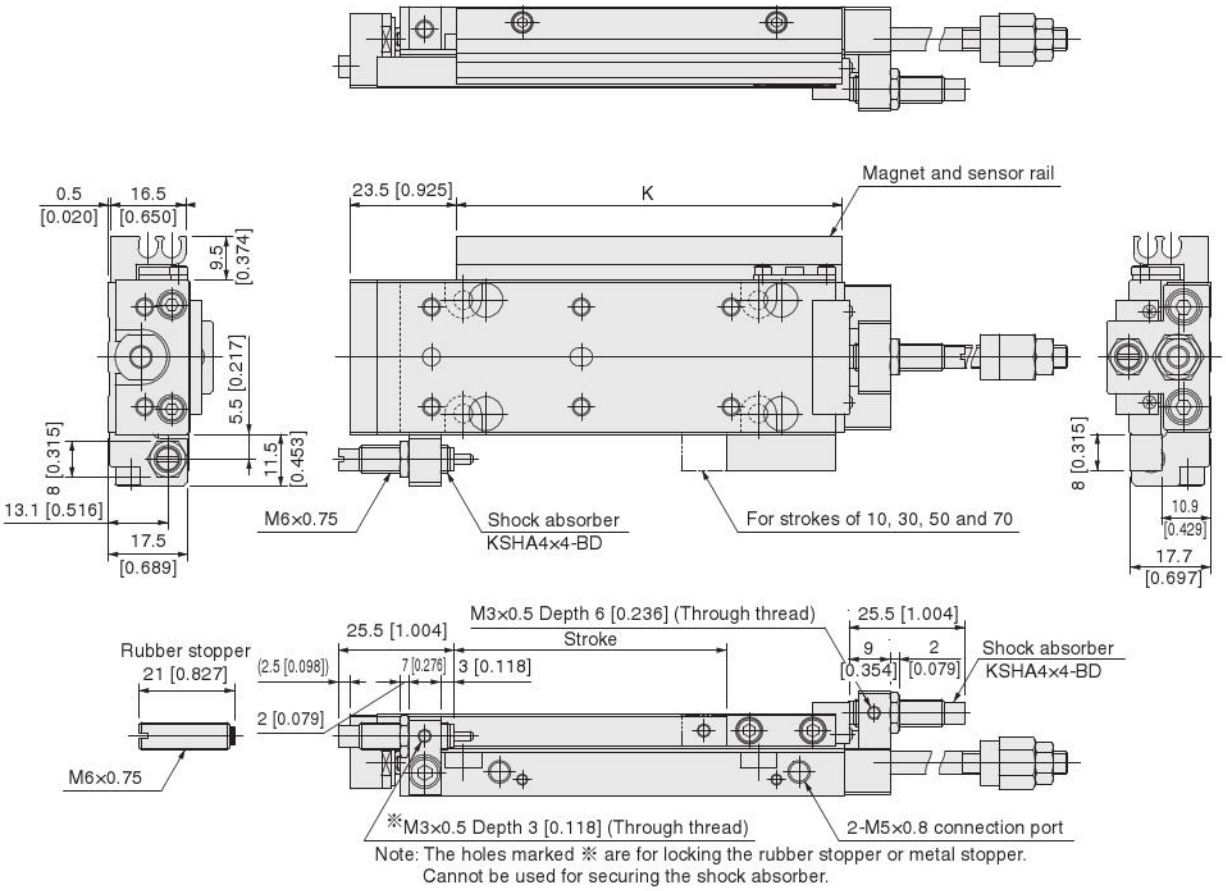

Note: The holes marked ※ are for locking the rubber stopper or metal stopper.
Cannot be used for securing the shock absorber.

Piping direction: -L

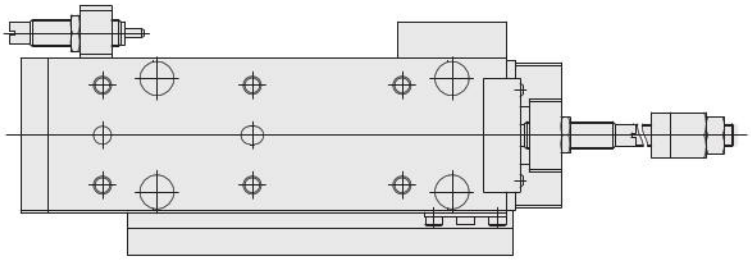

Locating pin: -P (P-MGA2)

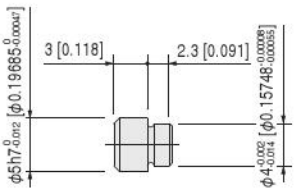

● Cylinder with buffer

MGAG12

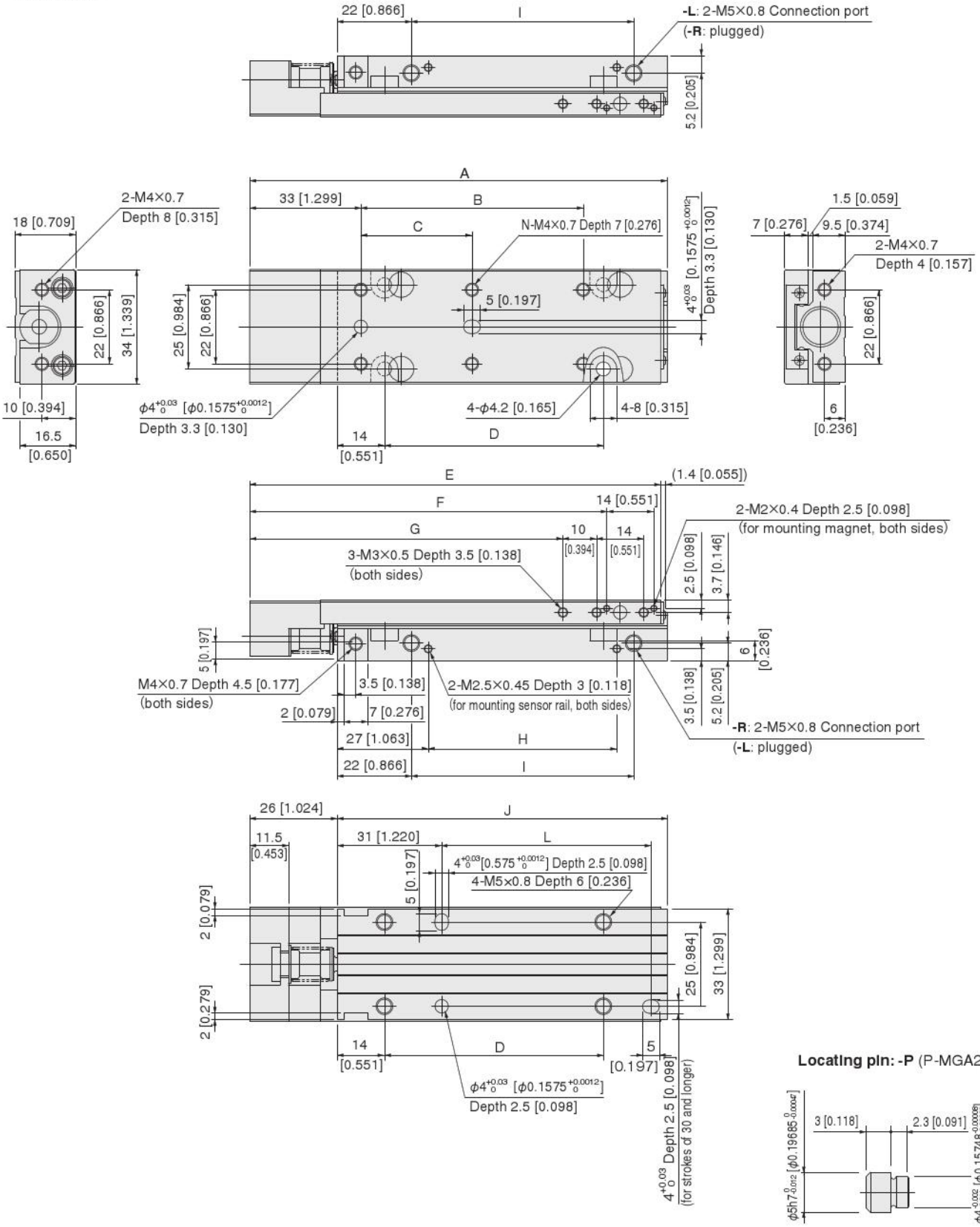

Stroke	A	B	C	D	E	F	G	H	I	J	K	L	N
10, 15, 20	84 [3.307]	—	26 [1.024]	25 [0.984]	82 [3.228]	66 [2.598]	53 [2.087]	16 [0.630]	26 [1.024]	58 [2.283]	45 [1.772]	—	4
30, 40	104 [4.094]	—	46 [1.811]	45 [1.772]	102 [4.016]	86 [3.386]	73 [2.874]	36 [1.417]	46 [1.811]	78 [3.071]	65 [2.559]	42 [1.654]	4
50, 60	124 [4.882]	66 [2.598]	33 [1.299]	65 [2.559]	122 [4.803]	106 [4.173]	93 [3.661]	56 [2.205]	66 [2.598]	98 [3.858]	85 [3.346]	62 [2.441]	6
70, 80	144 [5.669]	86 [3.386]	43 [1.693]	85 [3.346]	142 [5.591]	126 [4.961]	113 [4.449]	76 [2.992]	86 [3.386]	118 [4.646]	105 [4.134]	82 [3.228]	6

Remark: The buffer stroke of ϕ12 [0.472] cylinder with buffer is a maximum of 6 mm [0.236 in.].

Dimensions of Bore Size ϕ12 [0.472] mm [in.]

- **Cylinder with buffer, magnet and sensor rail MGAGS12**
- **Cylinder with buffer and shock absorber MGAG□12-SSR**

Piping direction: -R

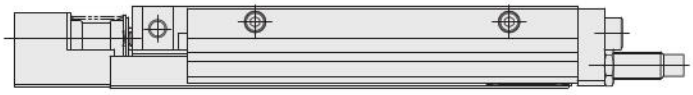

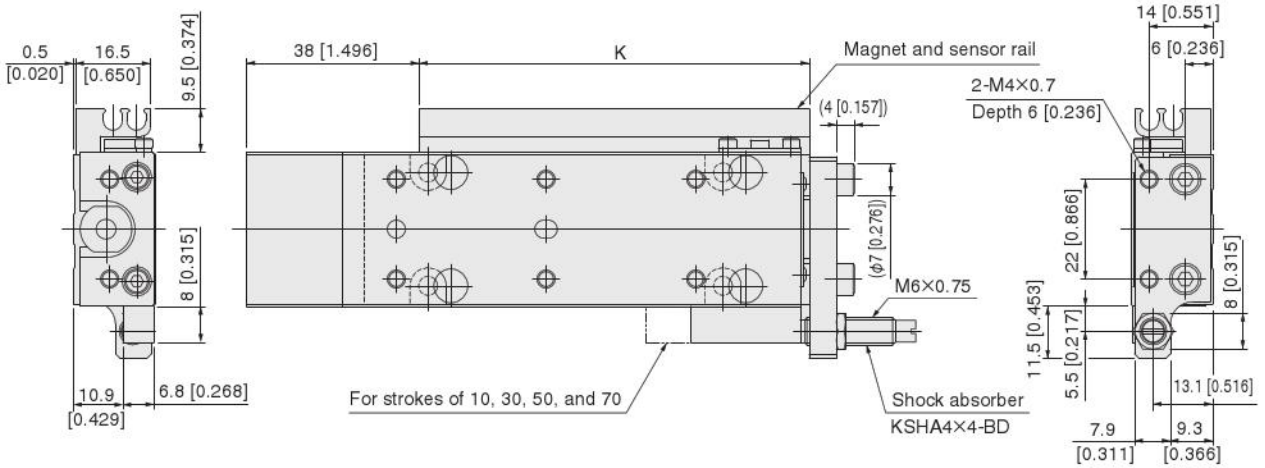

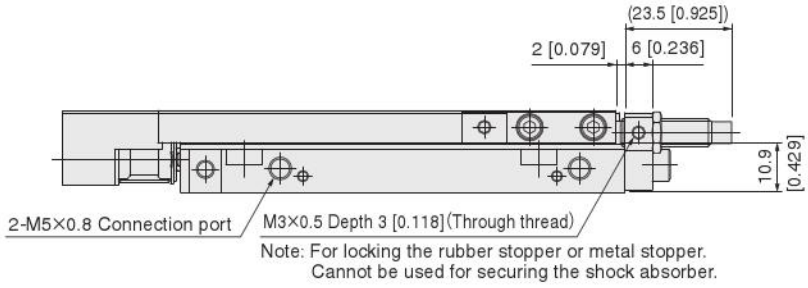

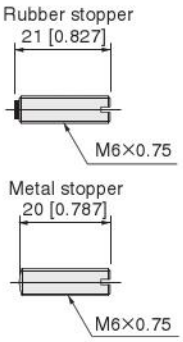

Piping direction: -L

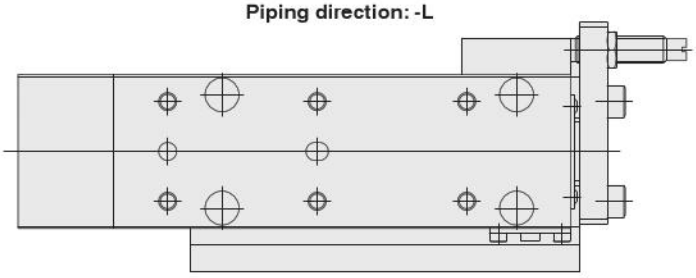

Locating pin: -P (P-MGA2)

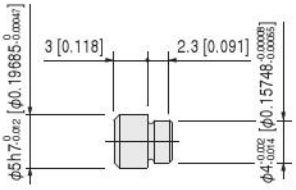

Remark: The buffer stroke of ϕ12 [0.472] cylinder with buffer is a maximum of 6 mm [0.236 in.].

● Extended side stroke adjusting cylinder with buffer

MGAPG12

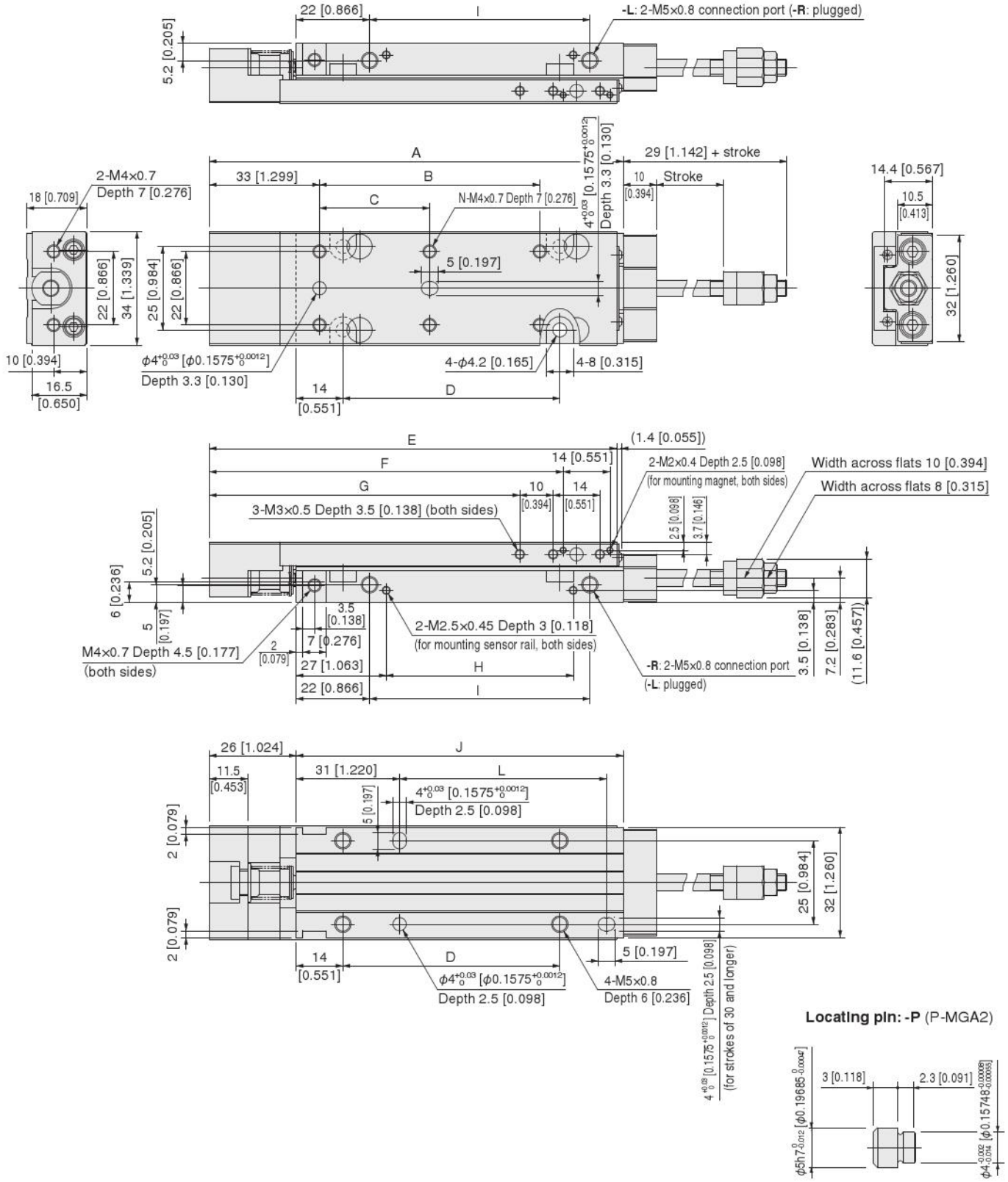

Stroke	A	B	C	D	E	F	G	H	I	J	K	L	N
10, 15, 20	84 [3.307]	—	26 [1.024]	25 [0.984]	82 [3.228]	66 [2.598]	53 [2.087]	16 [0.630]	26 [1.024]	58 [2.283]	45 [1.772]	—	4
30, 40	104 [4.094]	—	46 [1.811]	45 [1.772]	102 [4.016]	86 [3.386]	73 [2.874]	36 [1.417]	46 [1.811]	78 [3.071]	65 [2.559]	42 [1.654]	4
50, 60	124 [4.882]	66 [2.598]	33 [1.299]	65 [2.559]	122 [4.803]	106 [4.173]	93 [3.661]	56 [2.205]	66 [2.598]	98 [3.858]	85 [3.346]	62 [2.441]	6
70, 80	144 [5.669]	86 [3.386]	43 [1.693]	85 [3.346]	142 [5.591]	126 [4.961]	113 [4.449]	76 [2.992]	86 [3.386]	118 [4.646]	105 [4.134]	82 [3.228]	6

Remark: The buffer stroke of ϕ12 [0.472] cylinder with buffer is a maximum of 6 mm [0.236 in.].

● **Extended side stroke adjusting cylinder with buffer, magnet and sensor rail**

MGAPGS12

Piping direction: -R

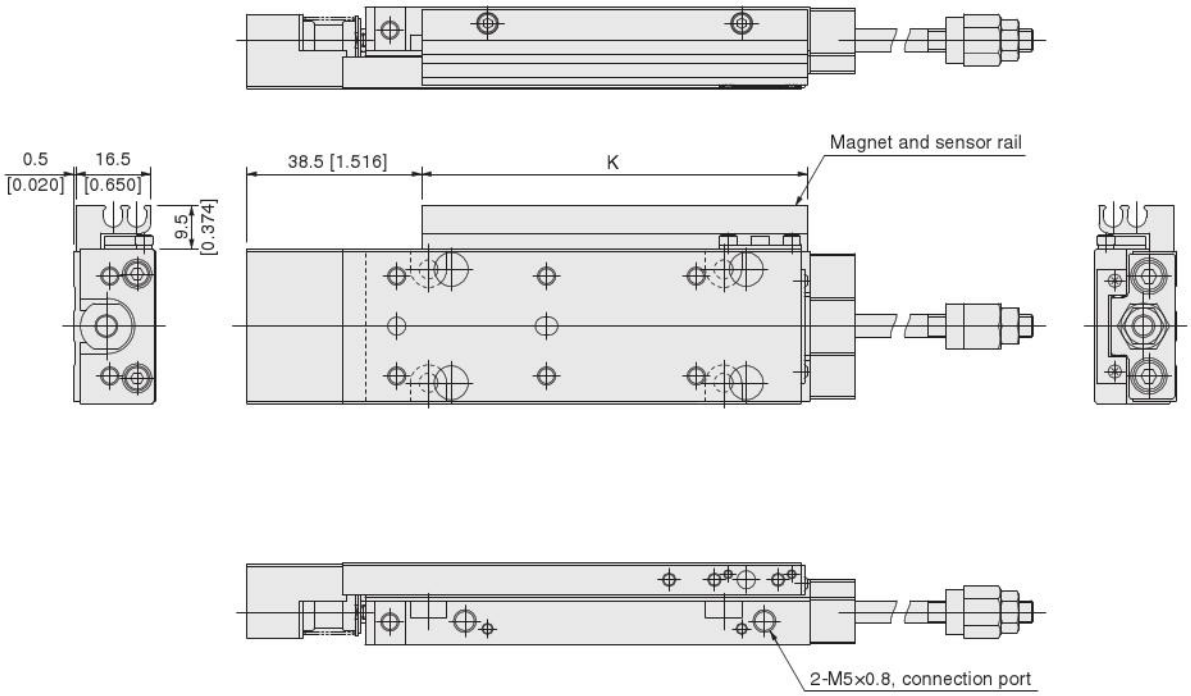

Piping direction: -L

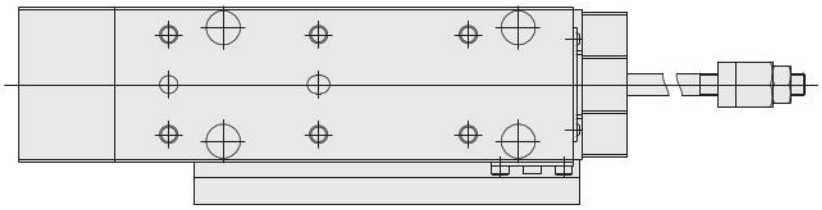

Locating pin: -P (P-MGA2)

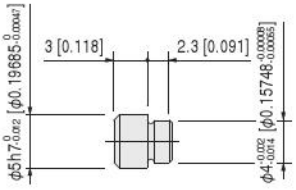

Remark: The buffer stroke of ϕ12 [0.472] cylinder with buffer is a maximum of 6 mm [0.236 in.].

● Extended/retracted-side stroke adjusting cylinder with buffer

MGAEG12

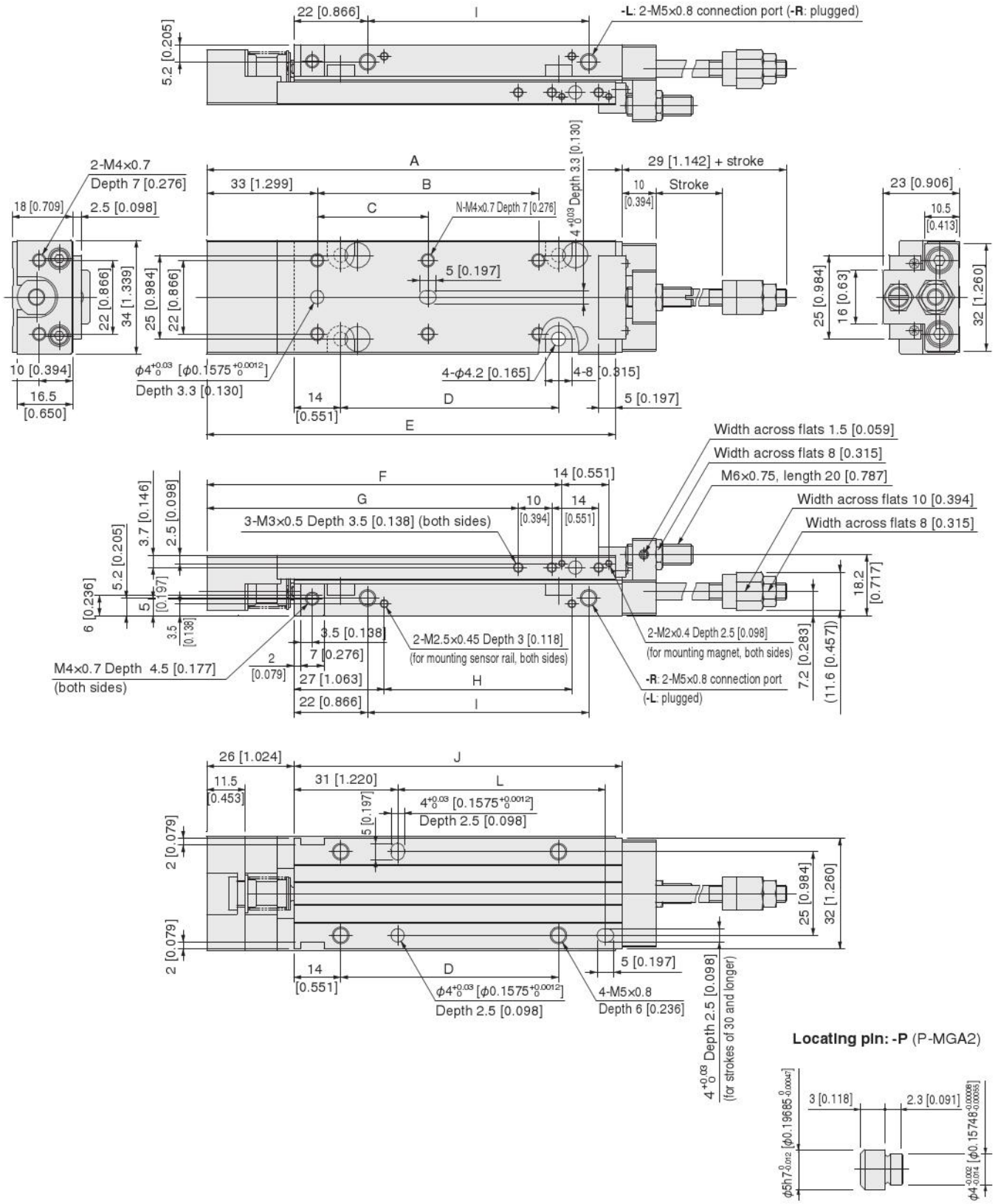

Stroke	A	B	C	D	E	F	G	H	I	J	K	L	N
10, 15, 20	84 [3.307]	—	26 [1.024]	25 [0.984]	82 [3.228]	66 [2.598]	53 [2.087]	16 [0.630]	26 [1.024]	58 [2.283]	45 [1.772]	—	4
30, 40	104 [4.094]	—	46 [1.811]	45 [1.772]	102 [4.016]	86 [3.386]	73 [2.874]	36 [1.417]	46 [1.811]	78 [3.071]	65 [2.559]	42 [1.654]	4
50, 60	124 [4.882]	66 [2.598]	33 [1.299]	65 [2.559]	122 [4.803]	106 [4.173]	93 [3.661]	56 [2.205]	66 [2.598]	98 [3.858]	85 [3.346]	62 [2.441]	6
70, 80	144 [5.669]	86 [3.386]	43 [1.693]	85 [3.346]	142 [5.591]	126 [4.961]	113 [4.449]	76 [2.992]	86 [3.386]	118 [4.646]	105 [4.134]	82 [3.228]	6

Remark: The buffer stroke of ϕ12 [0.472] cylinder with buffer is a maximum of 6 mm [0.236 in.].

●Extended/retracted-side stroke adjusting cylinder with buffer, magnet and sensor rail MGAEGS12
●Extended/retracted-side stroke adjusting cylinder with buffer and shock absorber MGAEG□12-SSR

Piping direction: -R, -SS2

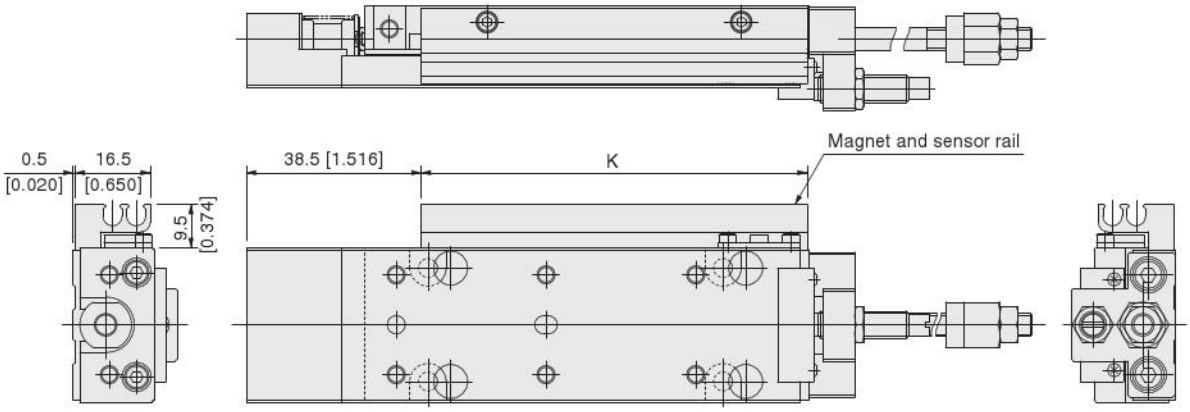

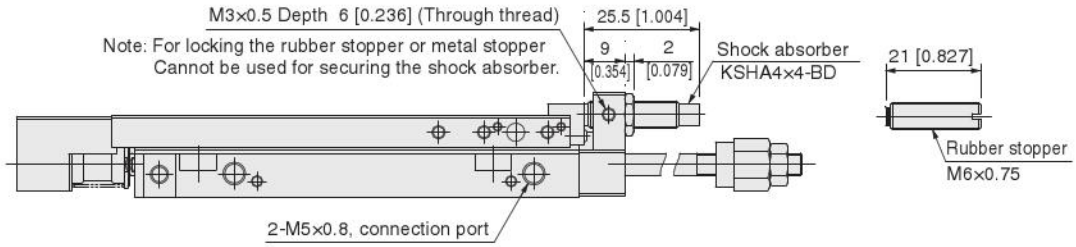

Piping direction: -L

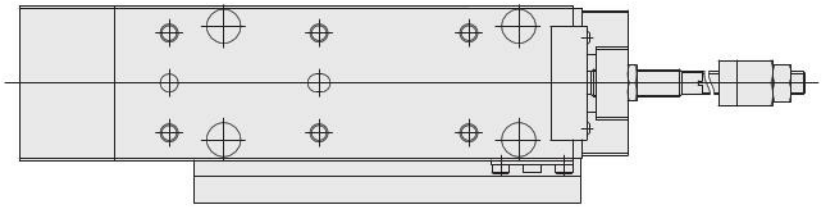

Locating pin: -P (P-MGA2)

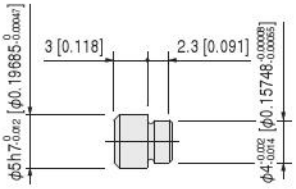

Remark: The buffer stroke of φ12 [0.472] cylinder with buffer is a maximum of 6 mm [0.236 in.].

● Cylinder with end keep

MGAK12

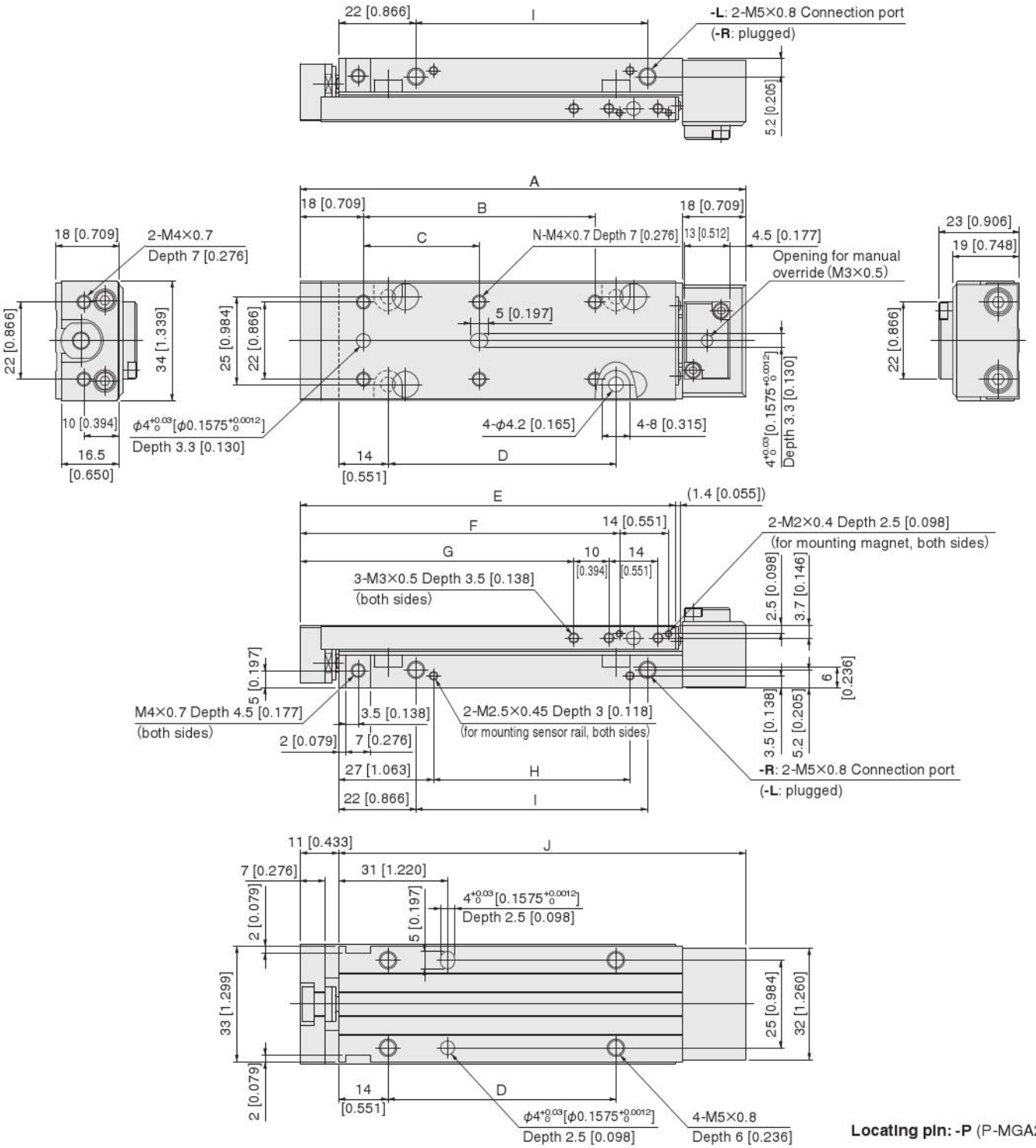

Stroke	A	B	C	D	E	F	G	H	I	J	K	L	N
10, 15, 20	87 [3.425]	—	26 [1.024]	25 [0.984]	67 [2.638]	51 [2.008]	38 [1.496]	16 [0.630]	26 [1.024]	76 [2.992]	45 [1.772]	—	4
30, 40	107 [4.213]	—	46 [1.811]	45 [1.772]	87 [3.425]	71 [2.795]	58 [2.283]	36 [1.417]	46 [1.811]	96 [3.780]	65 [2.559]	42 [1.654]	4
50, 60	127 [5.000]	66 [2.598]	33 [1.299]	65 [2.559]	107 [4.213]	91 [3.583]	78 [3.071]	56 [2.205]	66 [2.598]	116 [4.567]	85 [3.346]	62 [2.441]	6
70, 80	147 [5.787]	86 [3.386]	43 [1.693]	85 [3.346]	127 [5.000]	111 [4.370]	98 [3.858]	76 [2.992]	86 [3.386]	136 [5.354]	105 [4.134]	82 [3.228]	6

● **Cylinder with end keep, magnet and sensor rail** **MGAKS12**

● **Cylinder with end keep and shock absorber** **MGAK□12-SSF**

Piping direction: -R

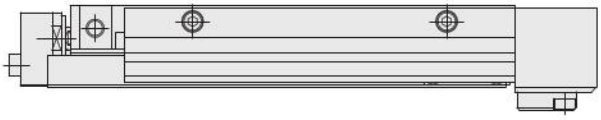

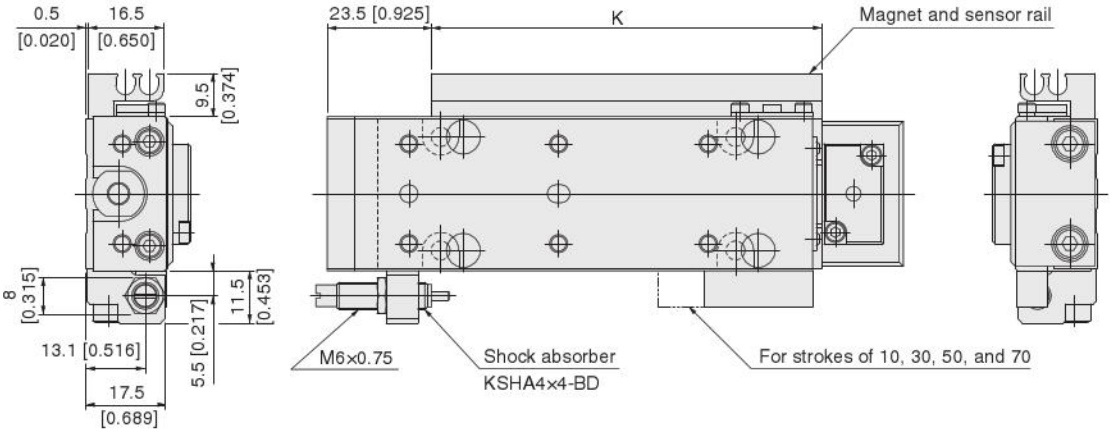

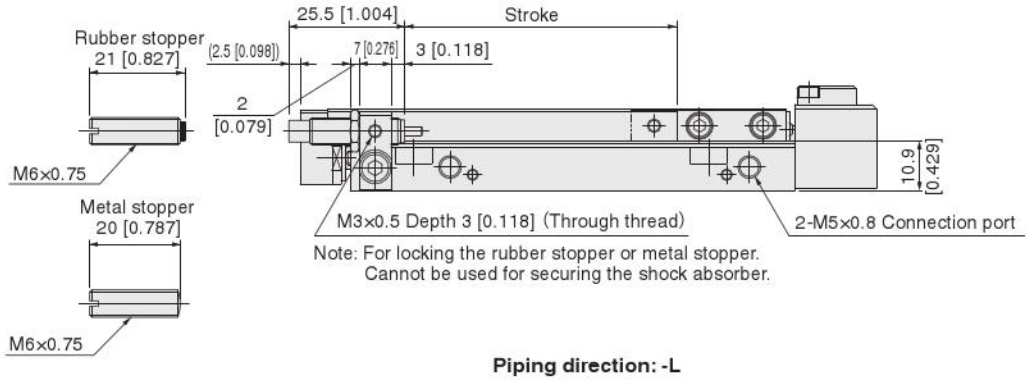

Piping direction: -L

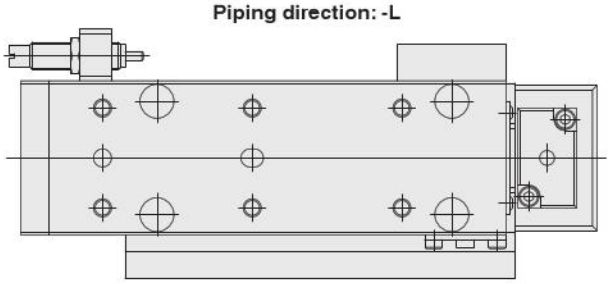

Locating pin: -P (P-MGA2)

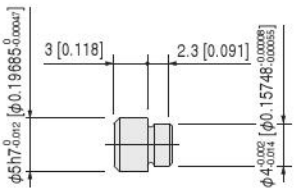

● Cylinder with buffer end keep

MGAGK12

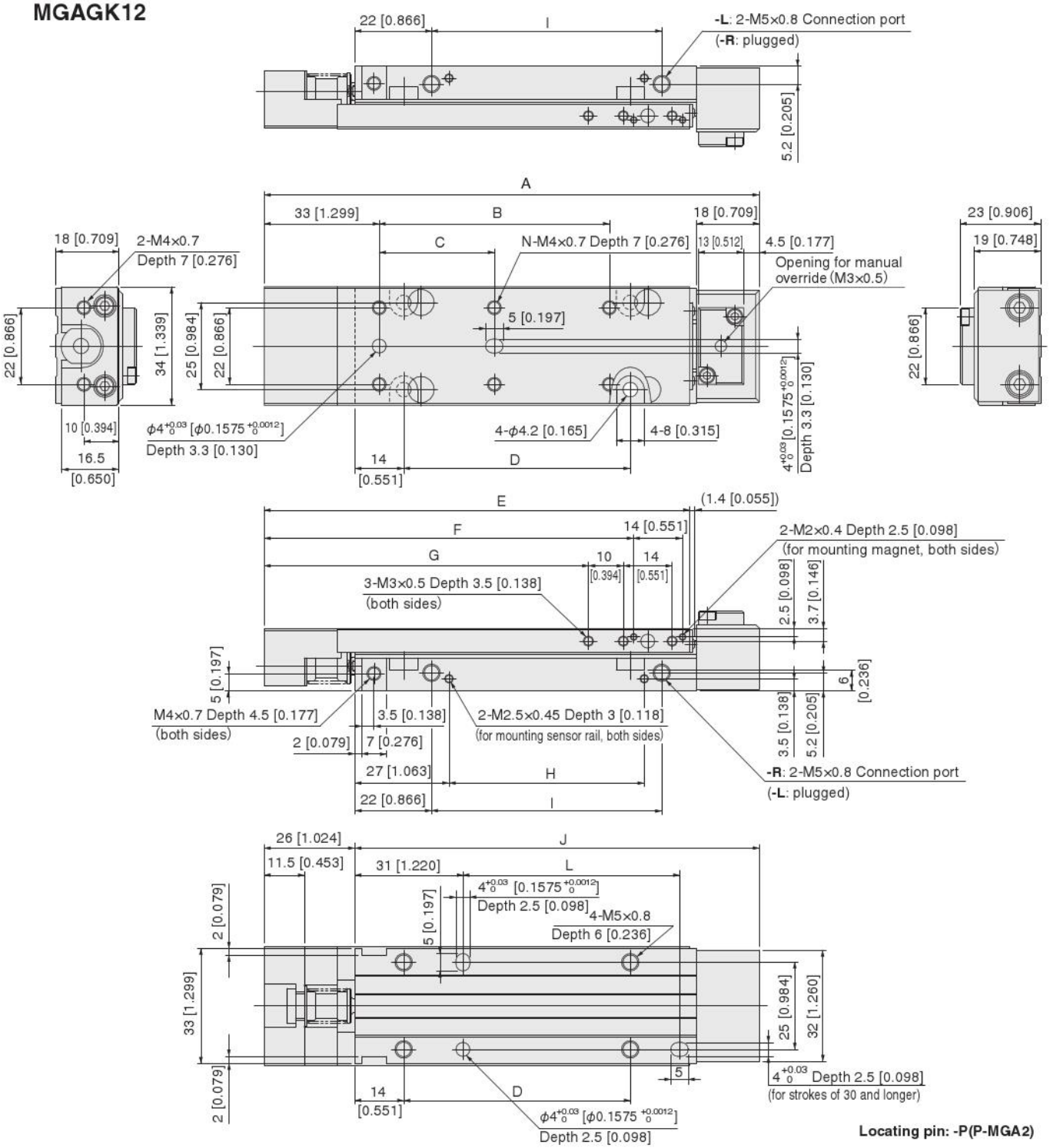

Stroke	A	B	C	D	E	F	G	H	I	J	K	L	N
10, 15, 20	102 [4.016]	—	26 [1.024]	25 [0.984]	82 [3.228]	66 [2.598]	53 [2.087]	16 [0.630]	26 [1.024]	76 [2.992]	45 [1.772]	—	4
30, 40	122 [4.803]	—	46 [1.811]	45 [1.772]	102 [4.016]	86 [3.386]	73 [2.874]	36 [1.417]	46 [1.811]	96 [3.780]	65 [2.559]	42 [1.654]	4
50, 60	142 [5.591]	66 [2.598]	33 [1.299]	65 [2.559]	122 [4.803]	106 [4.173]	93 [3.661]	56 [2.205]	66 [2.598]	116 [4.567]	85 [3.346]	62 [2.441]	6
70, 80	162 [6.378]	86 [3.386]	43 [1.693]	85 [3.346]	142 [5.591]	126 [4.961]	113 [4.449]	76 [2.992]	86 [3.386]	136 [5.354]	105 [4.134]	82 [3.228]	6

Remark: The buffer stroke of ϕ12 [0.472] cylinder with buffer is a maximum of 6 mm [0.236 in.].

● **Cylinder with buffer end keep, magnet and sensor rail**

MGAGKS12

Piping direction: -R

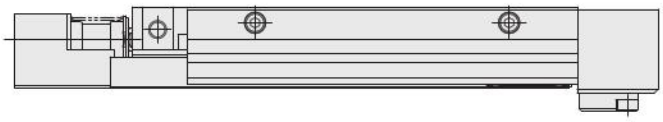

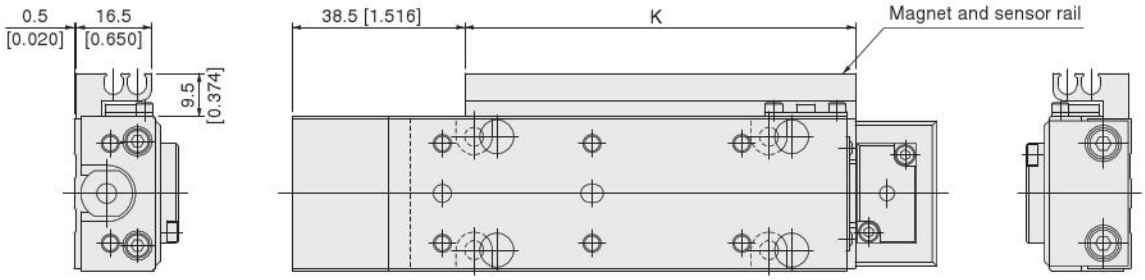

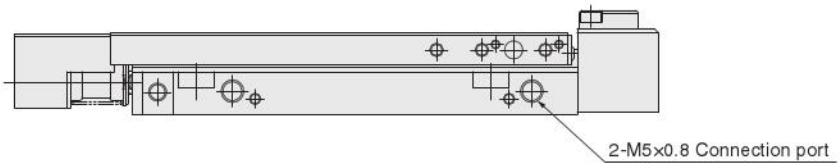

Piping direction: -L

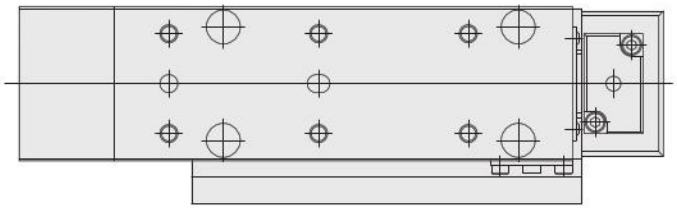

Locating pin: -P (P-MGA2)

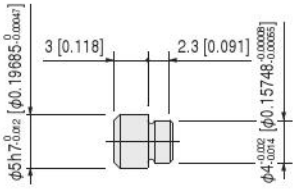

Remark: The buffer stroke of ϕ12 [0.472] cylinder with buffer is a maximum of 6 mm [0.236 in.].

● Standard cylinder, rear piping specifications

MGAH12

Piping direction: -R

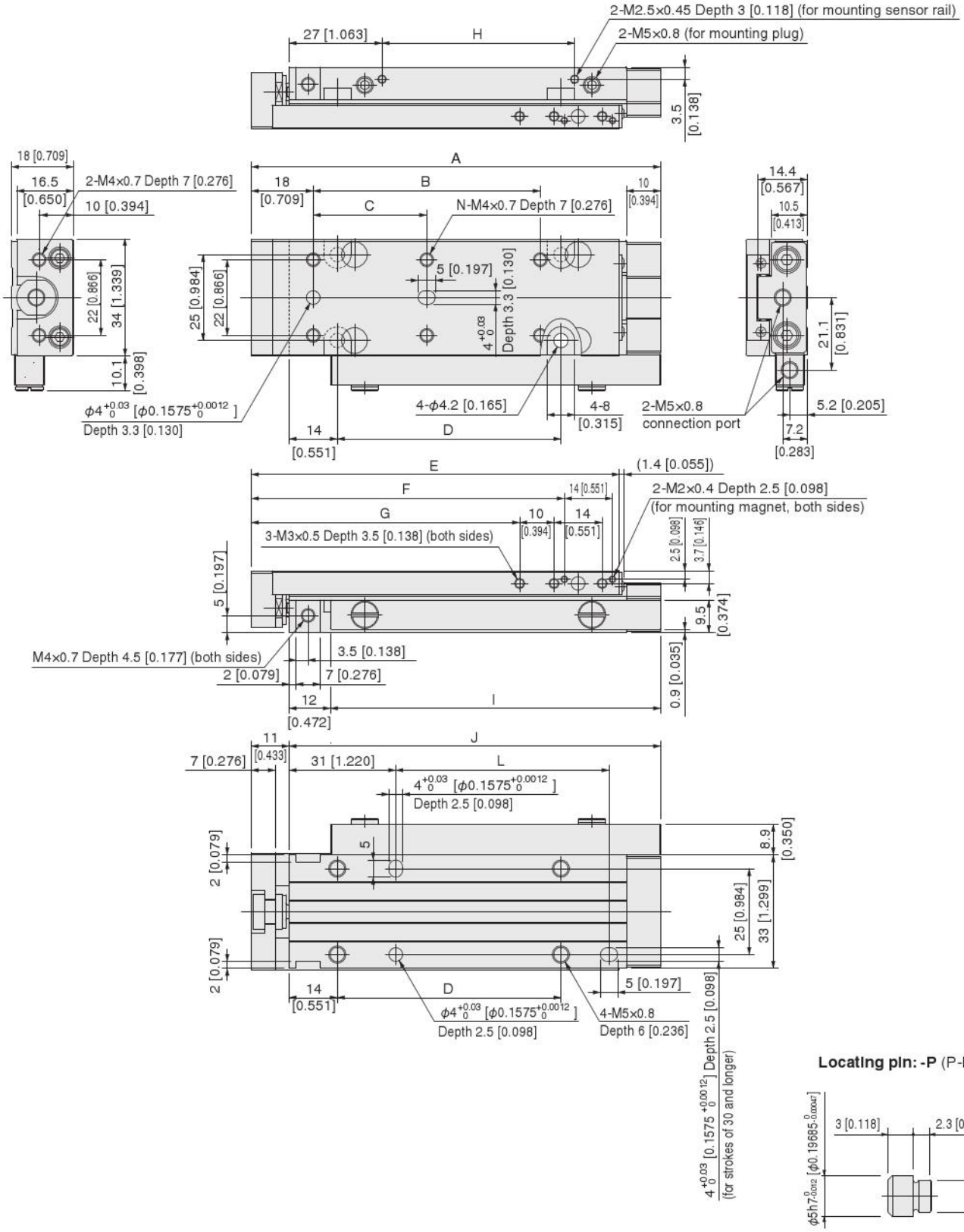

Stroke	A	B	C	D	E	F	G	H	I	J	K	L	N
10, 15, 20	79 [3.110]	—	26 [1.024]	25 [0.984]	67 [2.638]	51 [2.008]	38 [1.496]	16 [0.630]	56 [2.205]	68 [2.677]	45 [1.772]	—	4
30, 40	99 [3.898]	—	46 [1.811]	45 [1.772]	87 [3.425]	71 [2.795]	58 [2.283]	36 [1.417]	76 [2.992]	88 [3.465]	65 [2.559]	42 [1.654]	4
50, 60	119 [4.685]	66 [2.598]	33 [1.299]	65 [2.559]	107 [4.213]	91 [3.583]	78 [3.071]	56 [2.205]	96 [3.780]	108 [4.252]	85 [3.346]	62 [2.441]	6
70, 80	139 [5.472]	86 [3.386]	43 [1.693]	85 [3.346]	127 [5.000]	111 [4.370]	98 [3.858]	76 [2.992]	116 [4.567]	128 [5.039]	105 [4.134]	82 [3.228]	6

● **Cylinder with magnet and sensor rail MGAHS12**

● **Cylinder with shock absorber MGAH□12-SSF**

Piping direction: -R

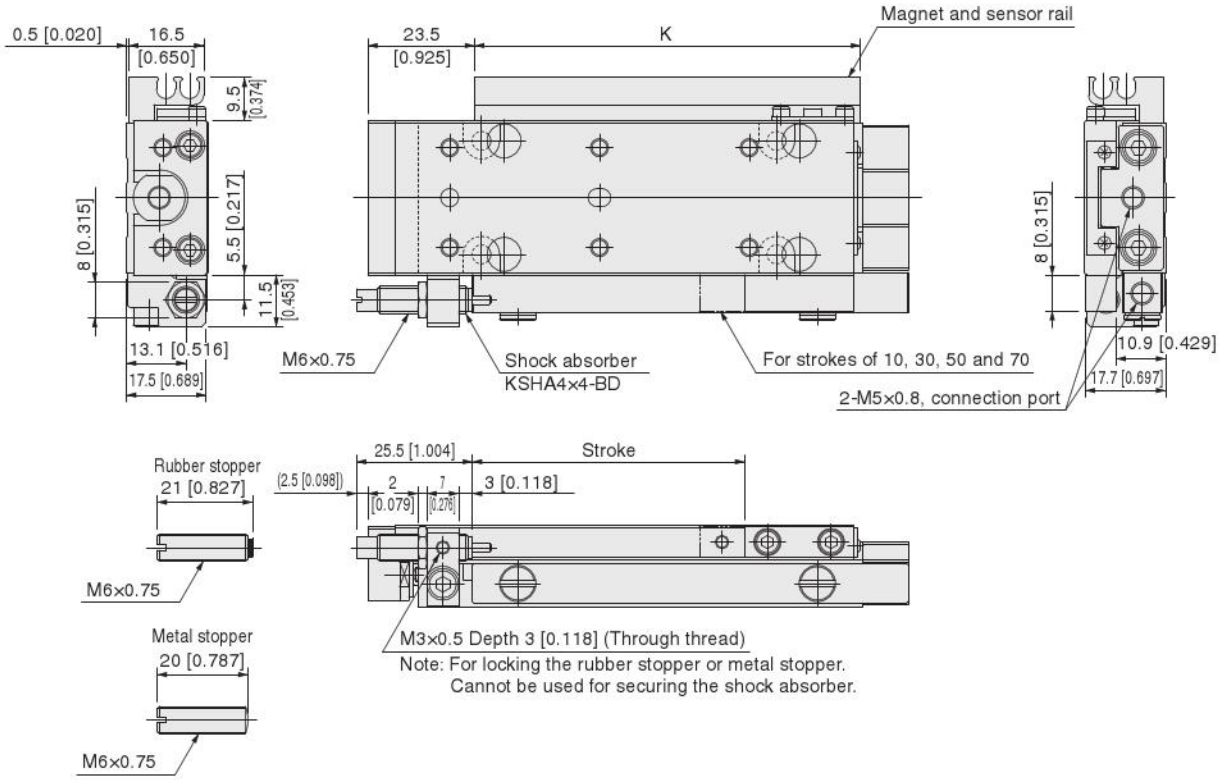

Piping direction: -L

Without options

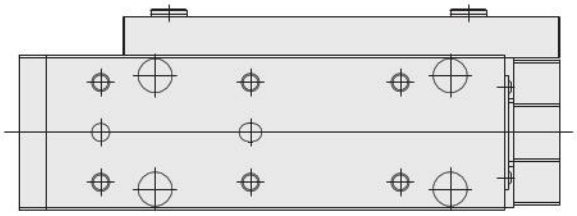

With sensor rail and shock absorber

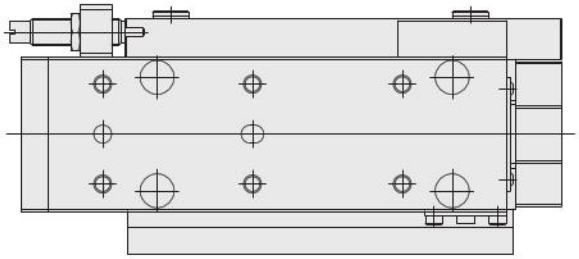

Locating pin: -P (P-MGA2)

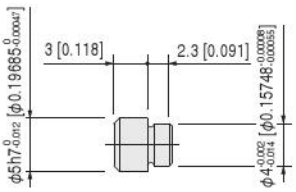

● Cylinder with buffer, rear piping specifications

MGAGH12

Piping direction: -R

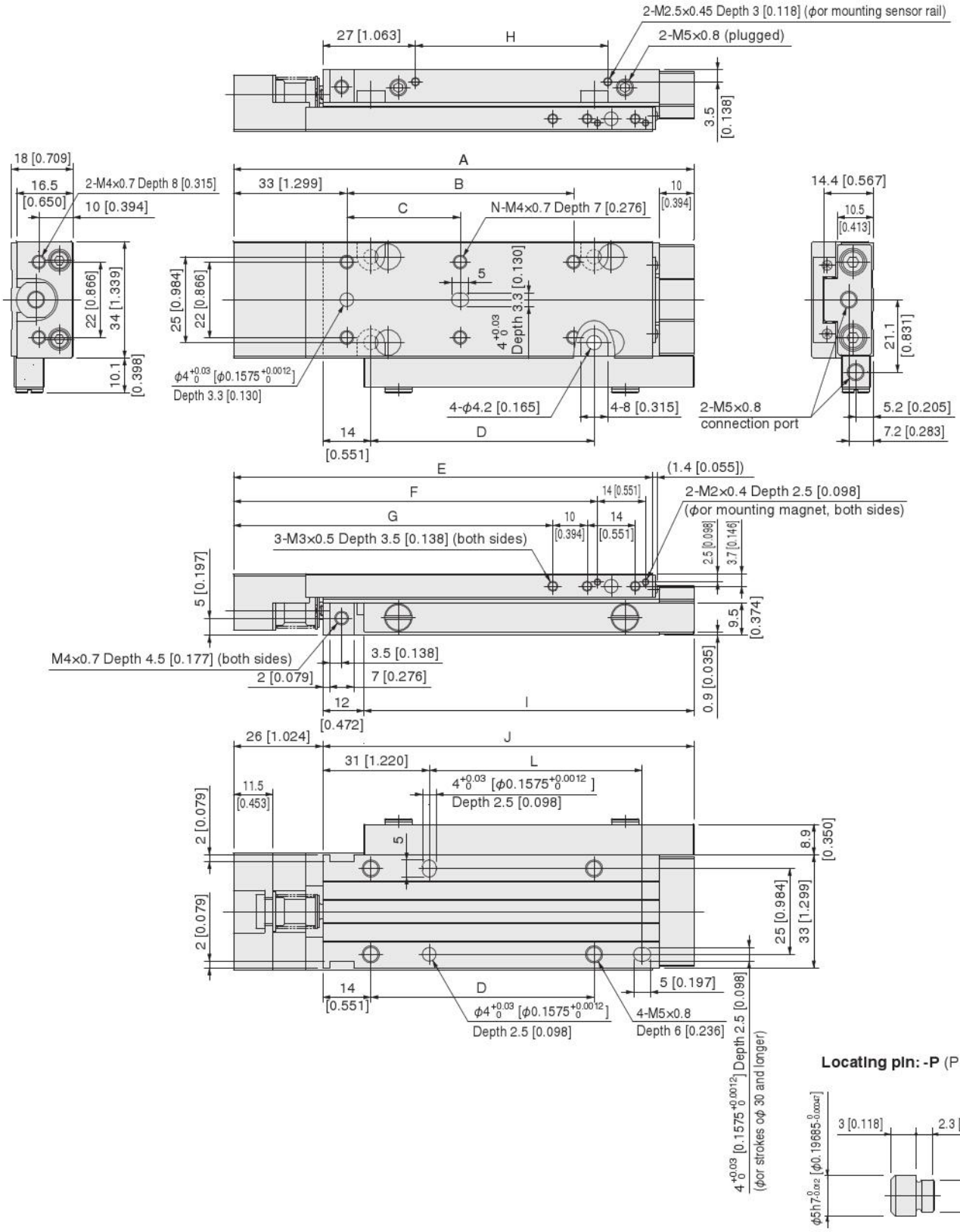

Stroke	A	B	C	D	E	F	G	H	I	J	K	L	N
10, 15, 20	94 [3.701]	—	26 [1.024]	25 [0.984]	82 [3.228]	66 [2.598]	53 [2.087]	16 [0.630]	56 [2.205]	68 [2.677]	45 [1.772]	—	4
30, 40	114 [4.488]	—	46 [1.811]	45 [1.772]	102 [4.016]	86 [3.386]	73 [2.874]	36 [1.417]	76 [2.992]	88 [3.465]	65 [2.559]	42 [1.654]	4
50, 60	134 [5.276]	66 [2.598]	33 [1.299]	65 [2.559]	122 [4.803]	106 [4.173]	93 [3.661]	56 [2.205]	96 [3.780]	108 [4.252]	85 [3.346]	62 [2.441]	6
70, 80	154 [6.063]	86 [3.386]	43 [1.693]	85 [3.346]	142 [5.591]	126 [4.961]	113 [4.449]	76 [2.992]	116 [4.567]	128 [5.039]	105 [4.134]	82 [3.228]	6

Remark: The buffer stroke of ϕ12 [0.472] cylinder with buffer is a maximum of 6 mm [0.236 in.].

●Cylinder with buffer, magnet and sensor rail

MGAGHS12

Piping direction: -R

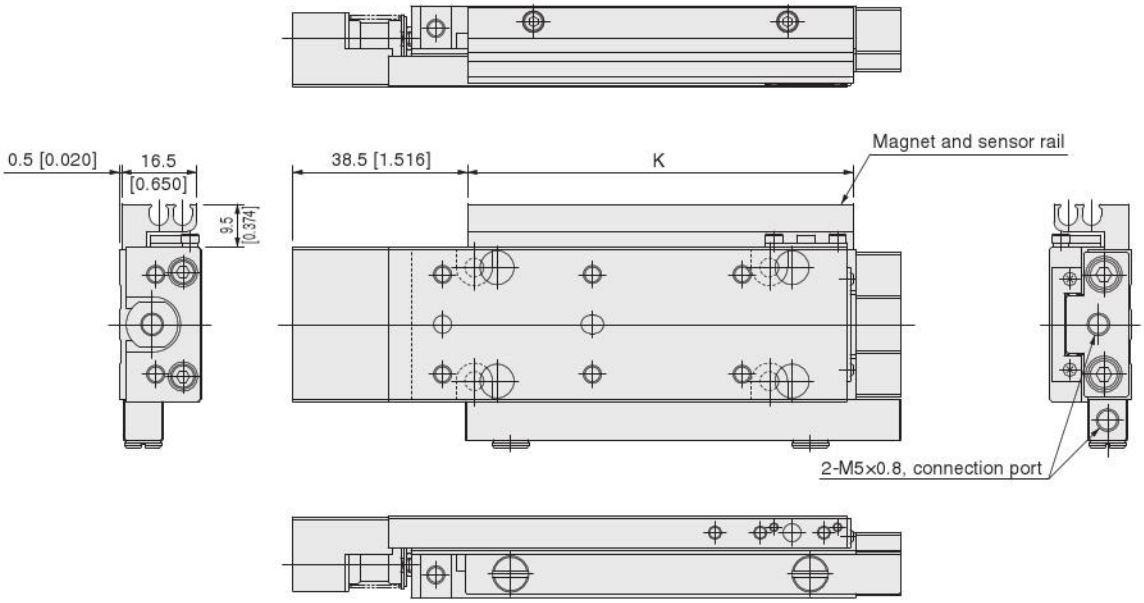

Piping direction: -L

Without options

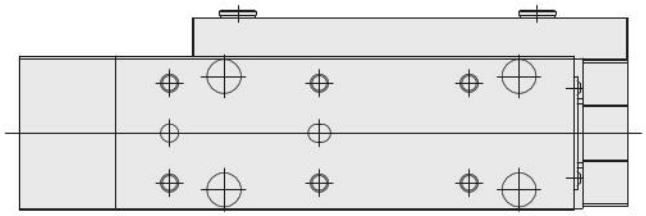

With magnet and sensor rail

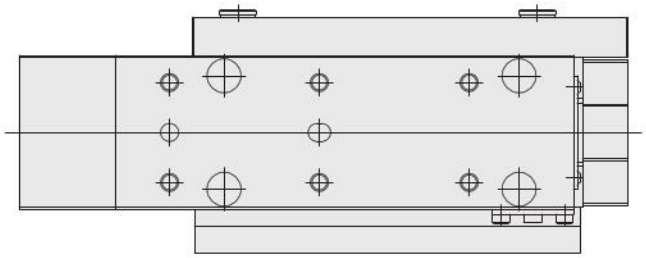

Locating pin: -P (P-MGA2)

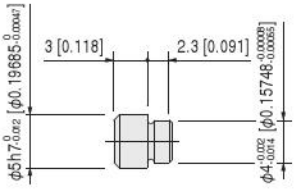

Remark: The buffer stroke of ϕ12 [0.472] cylinder with buffer is a maximum of 6 mm [0.236 in.].

● Standard cylinder

MGA16

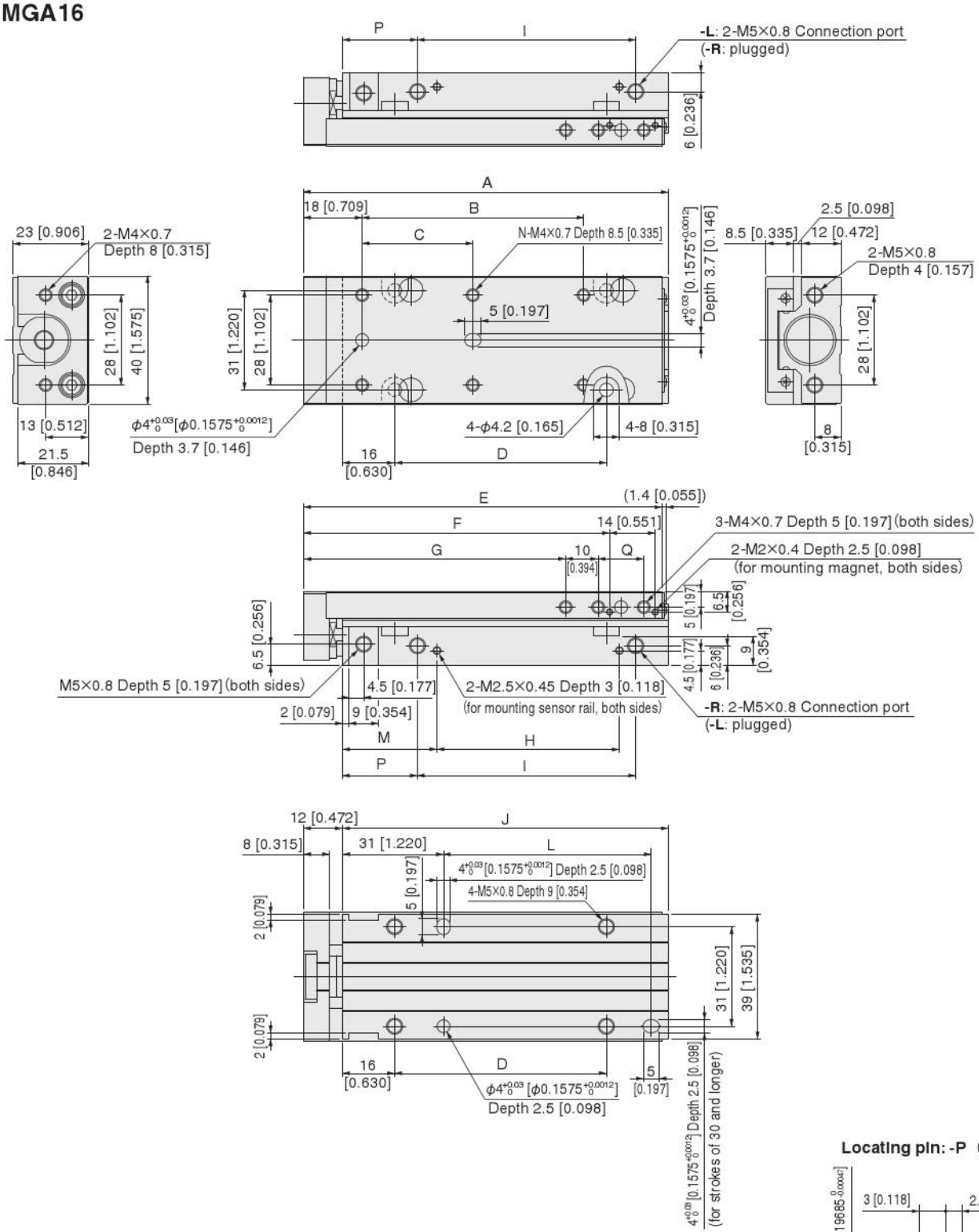

Stroke	A	B	C	D	E	F	G	H	I	J	K	L	M	N	P	Q	S
10, 15, 20	72 [2.835]	—	28 [1.102]	25 [0.984]	70 [2.756]	54 [2.126]	40.5 [1.594]	16 [0.630]	27 [1.063]	60 [2.362]	45 [1.772]	—	29 [1.142]	4	23 [0.906]	14 [0.551]	26.5 [1.043]
30, 40	92 [3.622]	—	48 [1.89]	45 [1.772]	90 [3.543]	74 [2.913]	60.5 [2.382]	36 [1.417]	47 [1.850]	80 [3.150]	65 [2.559]	44 [1.732]	29 [1.142]	4	23 [0.906]	14 [0.551]	26.5 [1.043]
50, 60	112 [4.409]	68 [2.677]	34 [1.339]	65 [2.559]	110 [4.331]	94 [3.701]	80.5 [3.169]	56 [2.205]	67 [2.638]	100 [3.937]	85 [3.346]	64 [2.520]	29 [1.142]	6	23 [0.906]	14 [0.551]	26.5 [1.043]
70, 80	132 [5.197]	88 [3.465]	44 [1.732]	85 [3.346]	130 [5.118]	114 [4.488]	100.5 [3.957]	76 [2.992]	87 [3.425]	120 [4.724]	105 [4.134]	84 [3.307]	29 [1.142]	6	23 [0.906]	14 [0.551]	26.5 [1.043]
90, 100	172 [6.772]	128 [5.039]	64 [2.520]	125 [4.921]	170 [6.693]	154 [6.063]	120.5 [4.744]	121 [4.764]	107 [4.213]	160 [6.299]	150 [5.906]	124 [4.882]	24 [0.945]	6	43 [1.693]	34 [1.339]	21.5 [0.846]

Dimensions of Bore Size ϕ16 [0.630] mm [in.]

- **Cylinder with magnet and sensor rail MGAS16**
- **Cylinder with shock absorber MGA□16-SS□**

Piping direction: -R

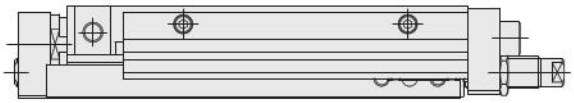

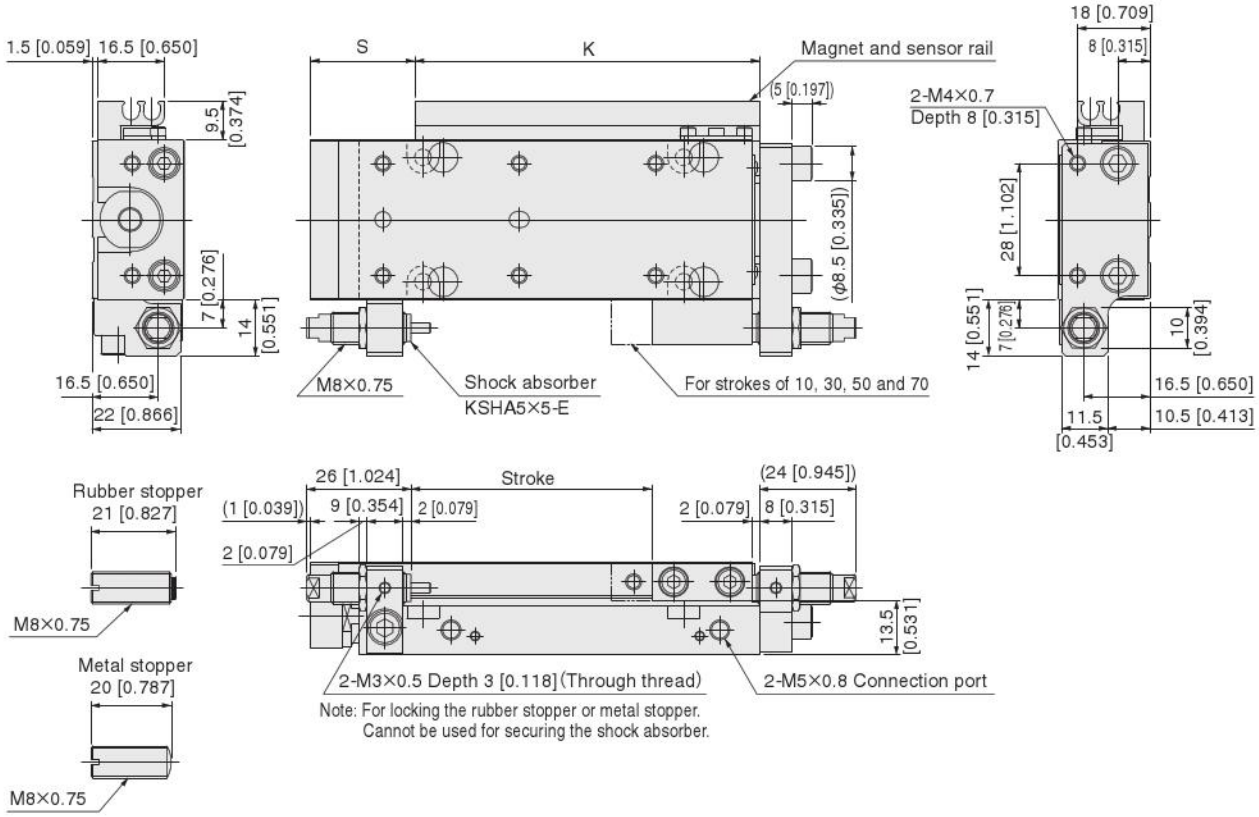

Piping direction: -L

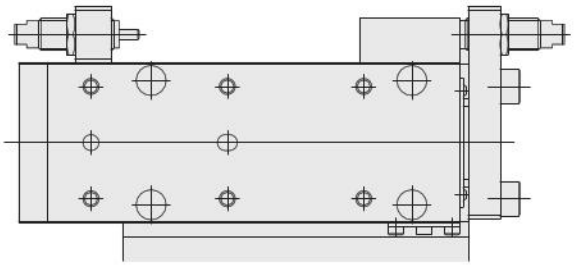

Locating pin: -P (P-MGA2)

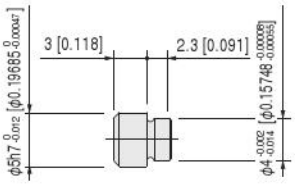

● Extended side stroke adjusting cylinder

MGAP16

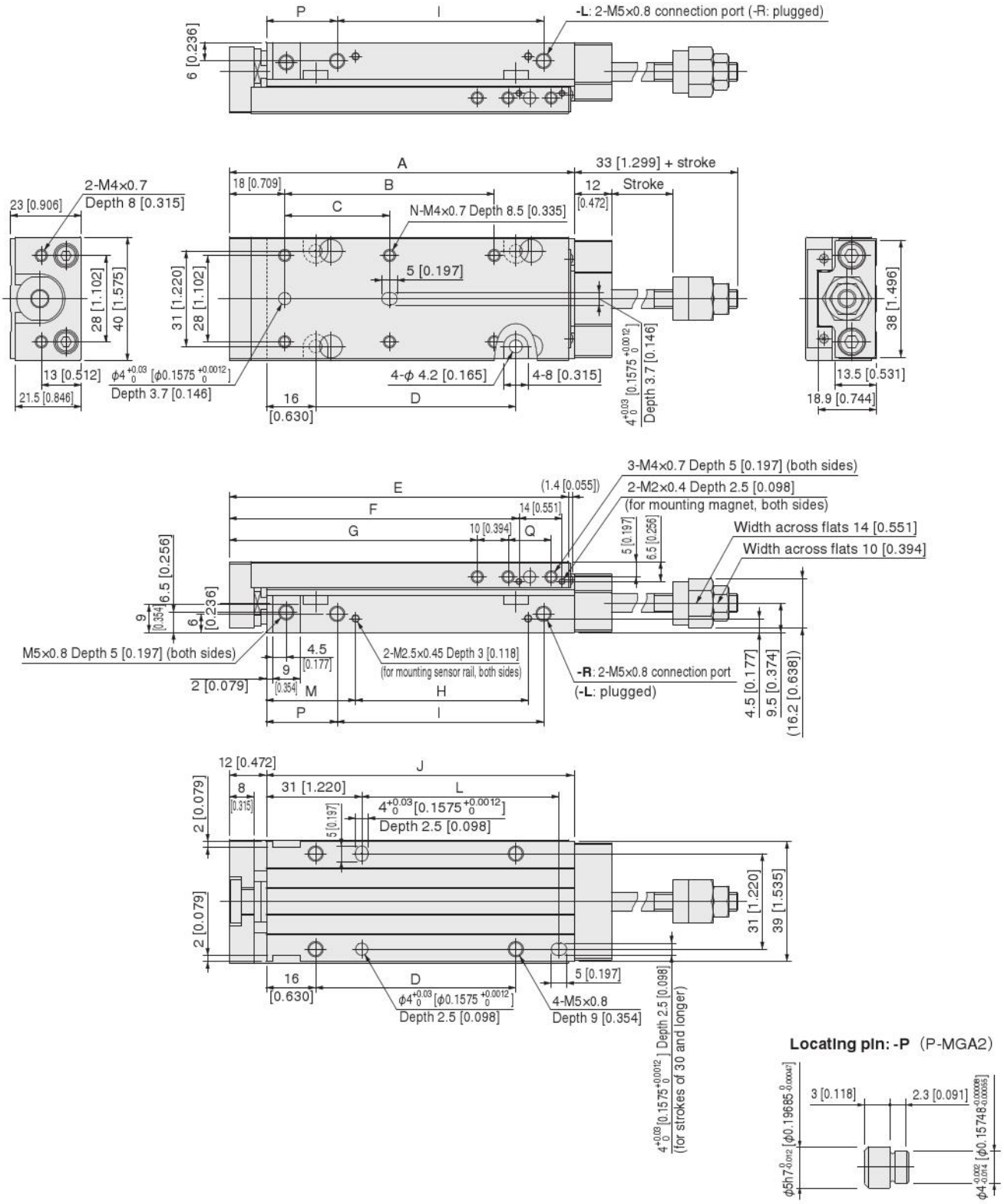

Stroke	A	B	C	D	E	F	G	H	I	J	K	L	M	N	P	Q	S
10, 15, 20	72 [2.835]	—	28 [1.102]	25 [0.984]	70 [2.756]	54 [2.126]	40.5 [1.594]	16 [0.630]	27 [1.063]	60 [2.362]	45 [1.772]	—	29 [1.142]	4	23 [0.906]	14 [0.551]	26.5 [1.043]
30, 40	92 [3.622]	—	48 [1.89]	45 [1.772]	90 [3.543]	74 [2.913]	60.5 [2.382]	36 [1.417]	47 [1.850]	80 [3.150]	65 [2.559]	44 [1.732]	29 [1.142]	4	23 [0.906]	14 [0.551]	26.5 [1.043]
50, 60	112 [4.409]	68 [2.677]	34 [1.339]	65 [2.559]	110 [4.331]	94 [3.701]	80.5 [3.169]	56 [2.205]	67 [2.638]	100 [3.937]	85 [3.346]	64 [2.520]	29 [1.142]	6	23 [0.906]	14 [0.551]	26.5 [1.043]
70, 80	132 [5.197]	88 [3.465]	44 [1.732]	85 [3.346]	130 [5.118]	114 [4.488]	100.5 [3.957]	76 [2.992]	87 [3.425]	120 [4.724]	105 [4.134]	84 [3.307]	29 [1.142]	6	23 [0.906]	14 [0.551]	26.5 [1.043]
90, 100	172 [6.772]	128 [5.039]	64 [2.520]	125 [4.921]	170 [6.693]	154 [6.063]	120.5 [4.744]	121 [4.764]	107 [4.213]	160 [6.299]	150 [5.906]	124 [4.882]	24 [0.945]	6	43 [1.693]	34 [1.339]	21.5 [0.846]

● **Extended side stroke adjusting cylinder with magnet and sensor rail MGAPS16**

● **Extended side stroke adjusting cylinder with shock absorber MGAP□16-SSF**

Piping direction: -R

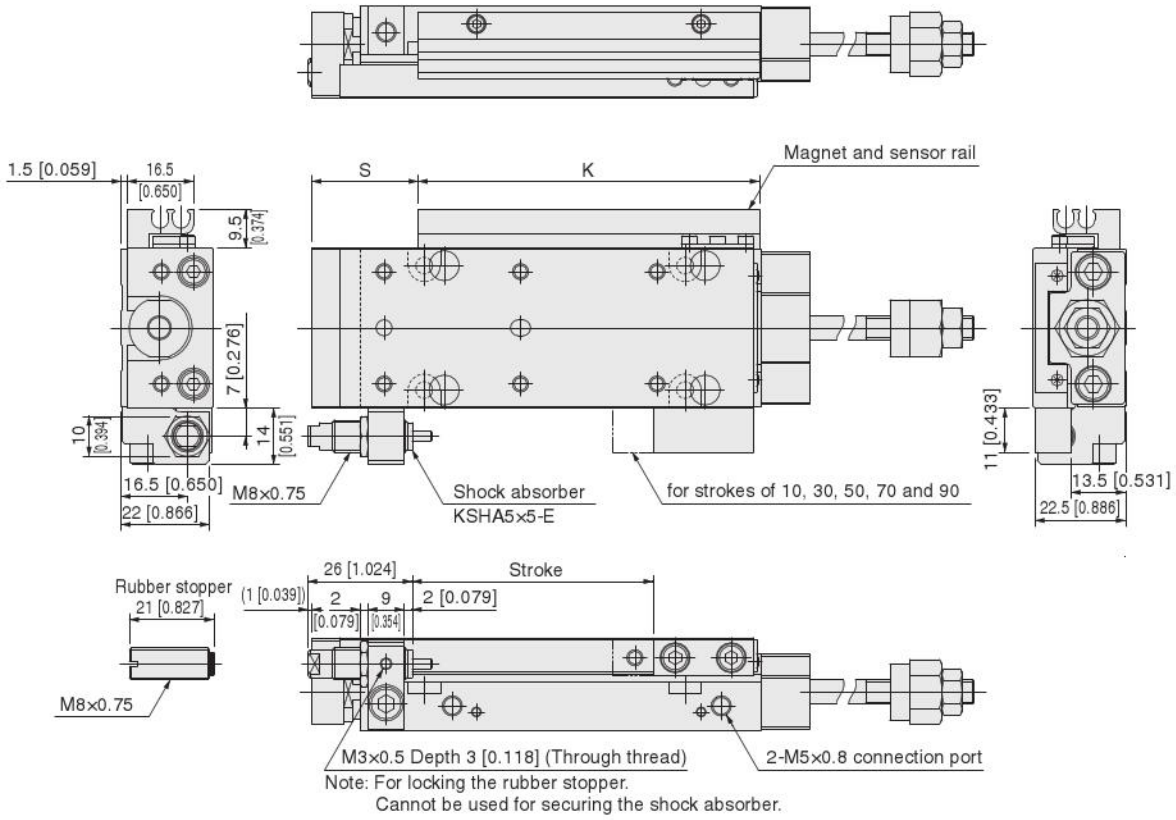

Piping direction: -L

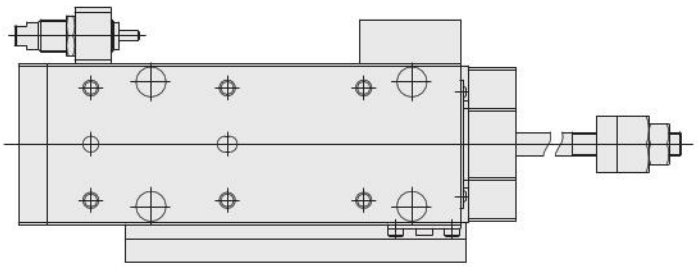

Locating pin: -P (P-MGA2)

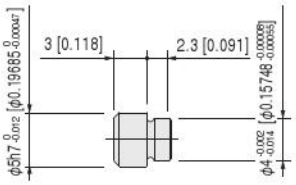

● Extended/retracted-side stroke adjusting cylinder

MGAE16

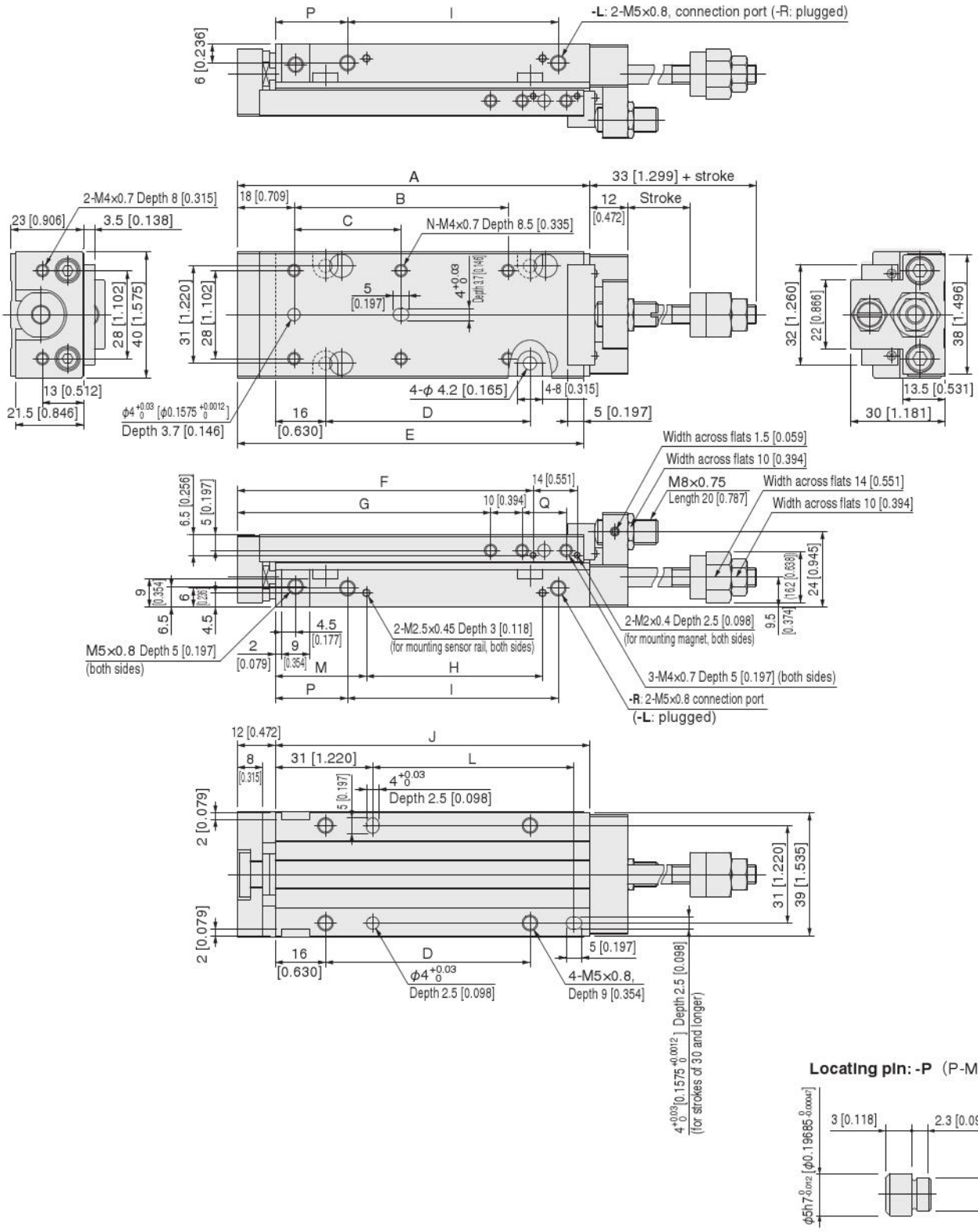

Stroke	A	B	C	D	E	F	G	H	I	J	K	L	M	N	P	Q	S
10, 15, 20	72 [2.835]	—	28 [1.102]	25 [0.984]	70 [2.756]	54 [2.126]	40.5 [1.594]	16 [0.630]	27 [1.063]	60 [2.362]	45 [1.772]	—	29 [1.142]	4	23 [0.906]	14 [0.551]	26.5 [1.043]
30, 40	92 [3.622]	—	48 [1.89]	45 [1.772]	90 [3.543]	74 [2.913]	60.5 [2.382]	36 [1.417]	47 [1.850]	80 [3.150]	65 [2.559]	44 [1.732]	29 [1.142]	4	23 [0.906]	14 [0.551]	26.5 [1.043]
50, 60	112 [4.409]	68 [2.677]	34 [1.339]	65 [2.559]	110 [4.331]	94 [3.701]	80.5 [3.169]	56 [2.205]	67 [2.638]	100 [3.937]	85 [3.346]	64 [2.520]	29 [1.142]	6	23 [0.906]	14 [0.551]	26.5 [1.043]
70, 80	132 [5.197]	88 [3.465]	44 [1.732]	85 [3.346]	130 [5.118]	114 [4.488]	100.5 [3.957]	76 [2.992]	87 [3.425]	120 [4.724]	105 [4.134]	84 [3.307]	29 [1.142]	6	23 [0.906]	14 [0.551]	26.5 [1.043]
90, 100	172 [6.772]	128 [5.039]	64 [2.520]	125 [4.921]	170 [6.693]	154 [6.063]	120.5 [4.744]	121 [4.764]	107 [4.213]	160 [6.299]	150 [5.906]	124 [4.882]	24 [0.945]	6	43 [1.693]	34 [1.339]	21.5 [0.846]

● **Extended/retracted-side stroke adjusting cylinder with magnet and sensor rail MGAES16**

● **Extended/retracted-side stroke adjusting cylinder with shock absorber MGAE□16-SS □**

Piping direction: -R

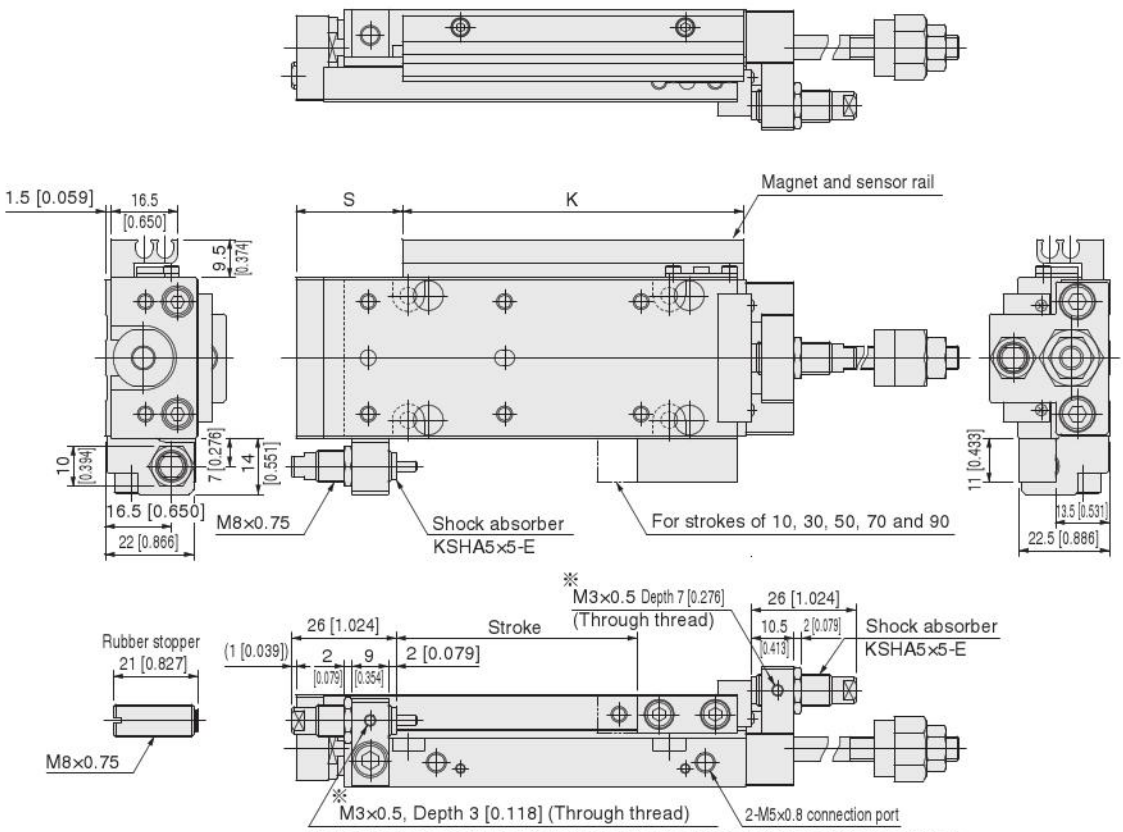

Note: The holes marked ※ are for locking the rubber stopper or metal stopper.
Cannot be used for securing the shock absorber.

Piping direction: -L

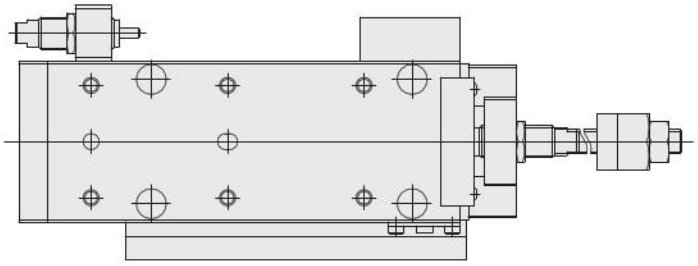

Locating pin: -P (P-MGA2)

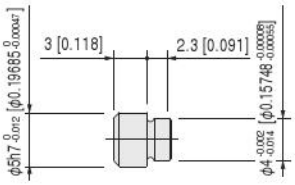

● Cylinder with buffer

MGAG16

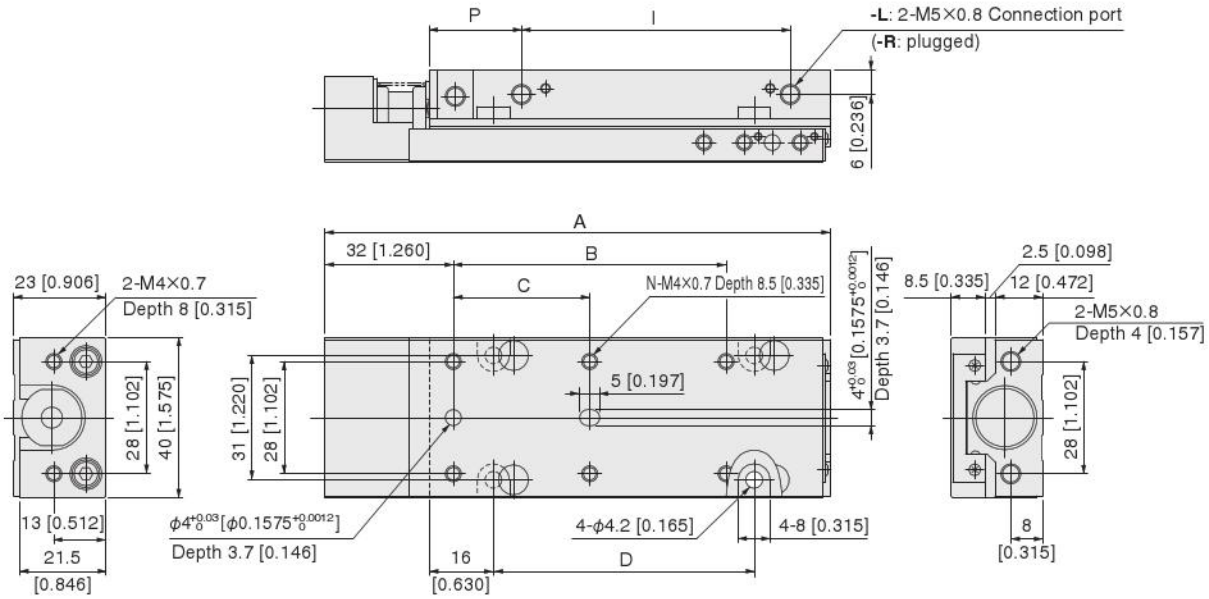

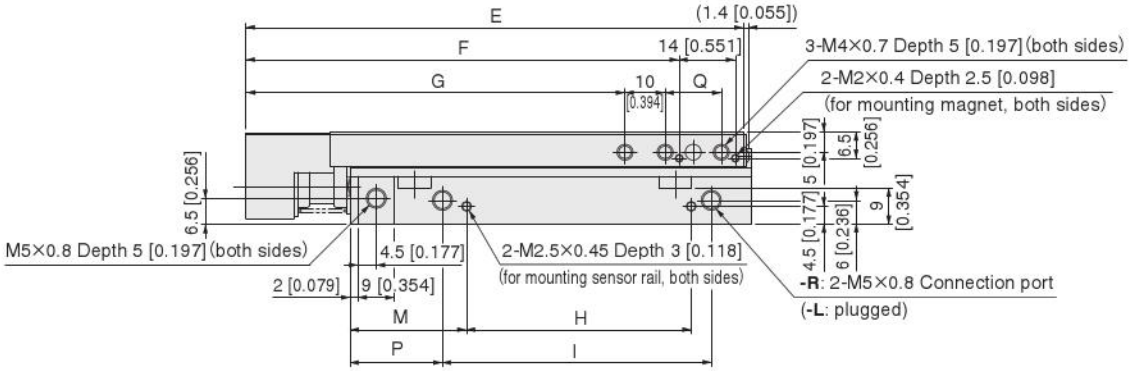

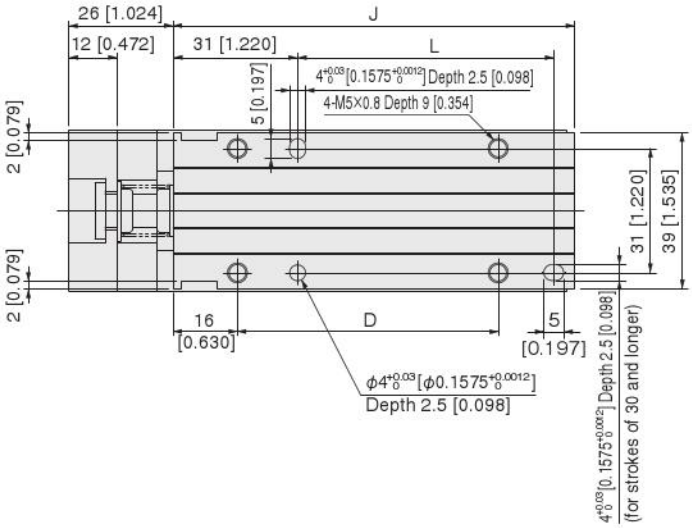

Locating pin: -P (P-MGA2)

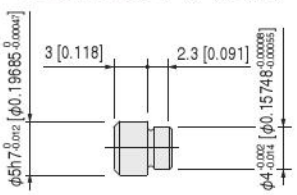

Stroke	A	B	C	D	E	F	G	H	I	J	K	L	M	N	P	Q	S
10, 15, 20	86 [3.386]	—	28 [1.102]	25 [0.984]	84 [3.307]	68 [2.677]	54.5 [2.146]	16 [0.630]	27 [1.063]	60 [2.362]	45 [1.772]	—	29 [1.142]	4	23 [0.906]	14 [0.551]	40.5 [1.594]
30, 40	106 [4.173]	—	48 [1.890]	45 [1.772]	104 [4.094]	88 [3.465]	74.5 [2.933]	36 [1.417]	47 [1.850]	80 [3.150]	65 [2.559]	44 [1.732]	29 [1.142]	4	23 [0.906]	14 [0.551]	40.5 [1.594]
50, 60	126 [4.961]	68 [2.677]	34 [1.339]	65 [2.559]	124 [4.882]	108 [4.252]	94.5 [3.720]	56 [2.205]	67 [2.638]	100 [3.937]	85 [3.346]	64 [2.520]	29 [1.142]	6	23 [0.906]	14 [0.551]	40.5 [1.594]
70, 80	146 [5.748]	88 [3.465]	44 [1.732]	85 [3.346]	144 [5.669]	128 [5.039]	114.5 [4.508]	76 [2.992]	87 [3.425]	120 [4.724]	105 [4.134]	84 [3.307]	29 [1.142]	6	23 [0.906]	14 [0.551]	40.5 [1.594]
90, 100	186 [7.323]	128 [5.039]	64 [2.520]	125 [4.921]	184 [7.244]	168 [6.614]	134.5 [5.295]	121 [4.764]	107 [4.213]	160 [6.299]	150 [5.906]	124 [4.882]	24 [0.945]	6	43 [1.693]	34 [1.339]	35.5 [1.398]

Dimensions of Bore Size ϕ16 [0.630] mm [in.]

● **Cylinder with buffer, magnet and sensor rail MGAGS16**

● **Cylinder with buffer and shock absorber MGAG□16-SSR**

Piping direction: -R

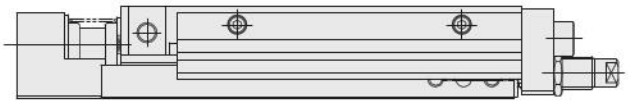

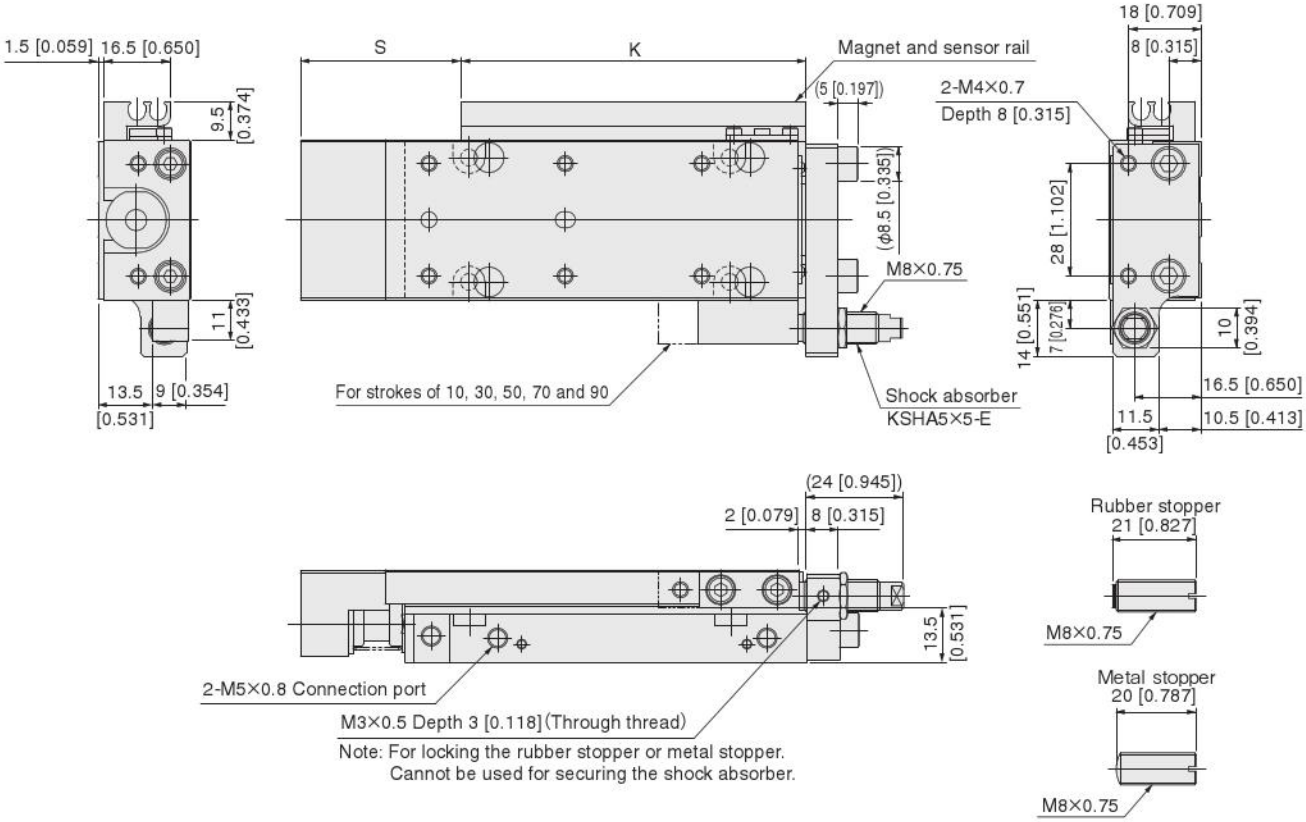

Piping direction: -L

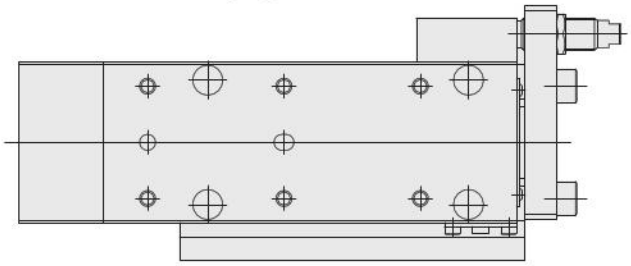

Locating pin: -P (P-MGA2)

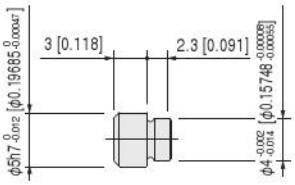

Remark: The buffer stroke of ϕ 16 [0.630] cylinder with buffer is a maximum of 6 mm [0.236 in.].

● Extended side stroke adjusting cylinder with buffer

MGAPG16

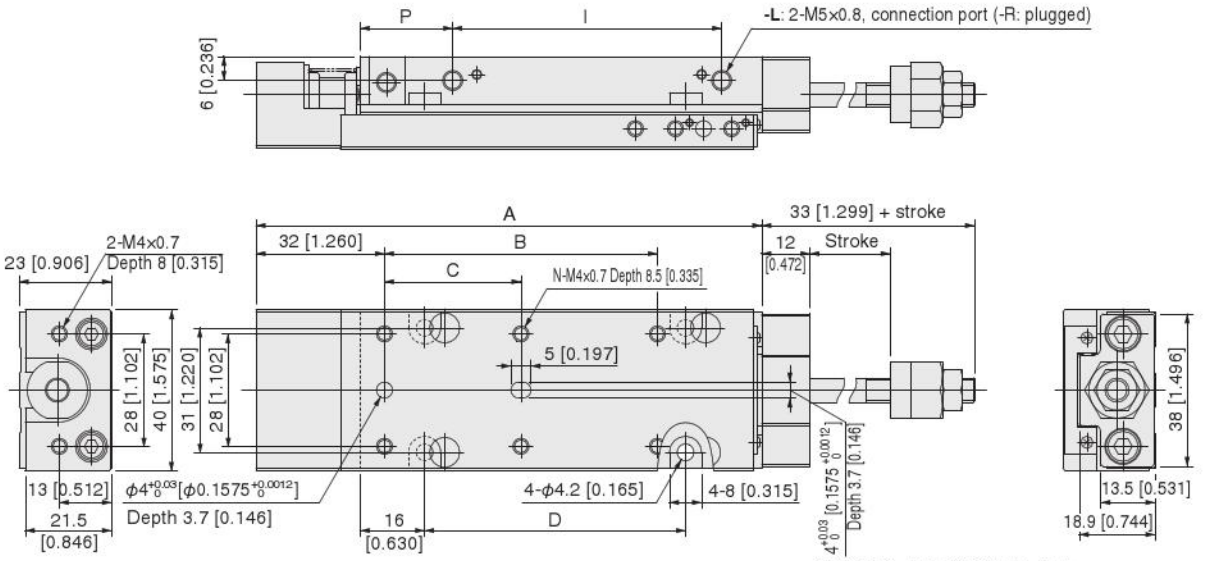

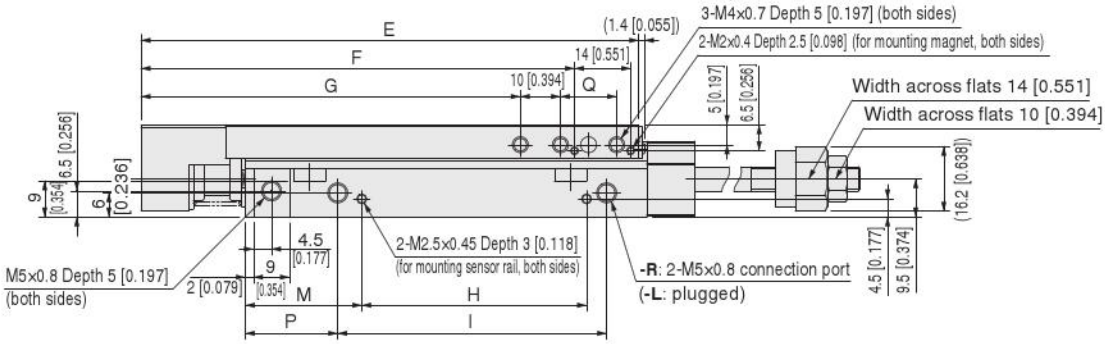

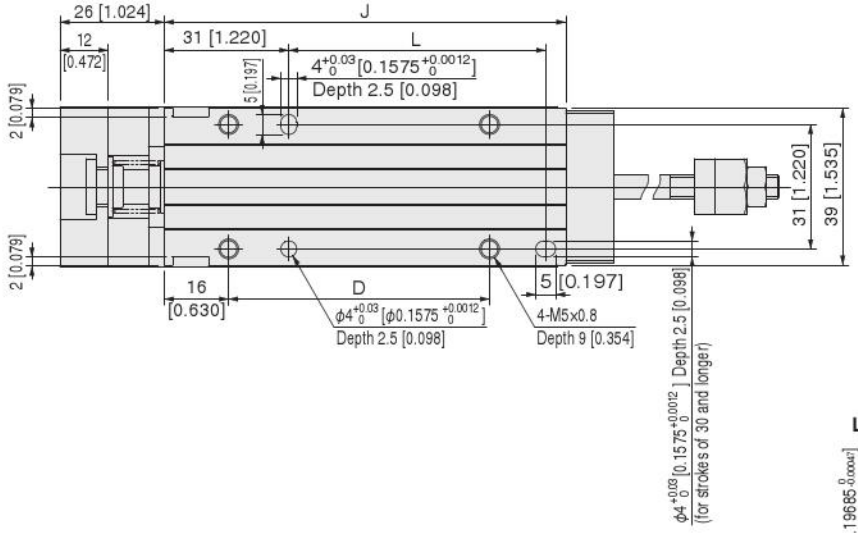

Locating pin: -P (P-MGA2)

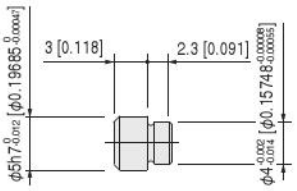

Stroke	A	B	C	D	E	F	G	H	I	J	K	L	M	N	P	Q	S
10, 15, 20	86 [3.386]	—	28 [1.102]	25 [0.984]	84 [3.307]	68 [2.677]	54.5 [2.146]	16 [0.630]	27 [1.063]	60 [2.362]	45 [1.772]	—	29 [1.142]	4	23 [0.906]	14 [0.551]	40.5 [1.594]
30, 40	106 [4.173]	—	48 [1.890]	45 [1.772]	104 [4.094]	88 [3.465]	74.5 [2.933]	36 [1.417]	47 [1.850]	80 [3.150]	65 [2.559]	44 [1.732]	29 [1.142]	4	23 [0.906]	14 [0.551]	40.5 [1.594]
50, 60	126 [4.961]	68 [2.677]	34 [1.339]	65 [2.559]	124 [4.882]	108 [4.252]	94.5 [3.720]	56 [2.205]	67 [2.638]	100 [3.937]	85 [3.346]	64 [2.520]	29 [1.142]	6	23 [0.906]	14 [0.551]	40.5 [1.594]
70, 80	146 [5.748]	88 [3.465]	44 [1.732]	85 [3.346]	144 [5.669]	128 [5.039]	114.5 [4.508]	76 [2.992]	87 [3.425]	120 [4.724]	105 [4.134]	84 [3.307]	29 [1.142]	6	23 [0.906]	14 [0.551]	40.5 [1.594]
90, 100	186 [7.323]	128 [5.039]	64 [2.520]	125 [4.921]	184 [7.244]	168 [6.614]	134.5 [5.295]	121 [4.764]	107 [4.213]	160 [6.299]	150 [5.906]	124 [4.882]	24 [0.945]	6	43 [1.693]	34 [1.339]	35.5 [1.398]

Remark: The buffer stroke of ϕ 16 [0.630] cylinder with buffer is a maximum of 6 mm [0.236 in.].

● **Extended side stroke adjusting cylinder with buffer, magnet and sensor rail**

MGAPGS16

Piping direction: -R

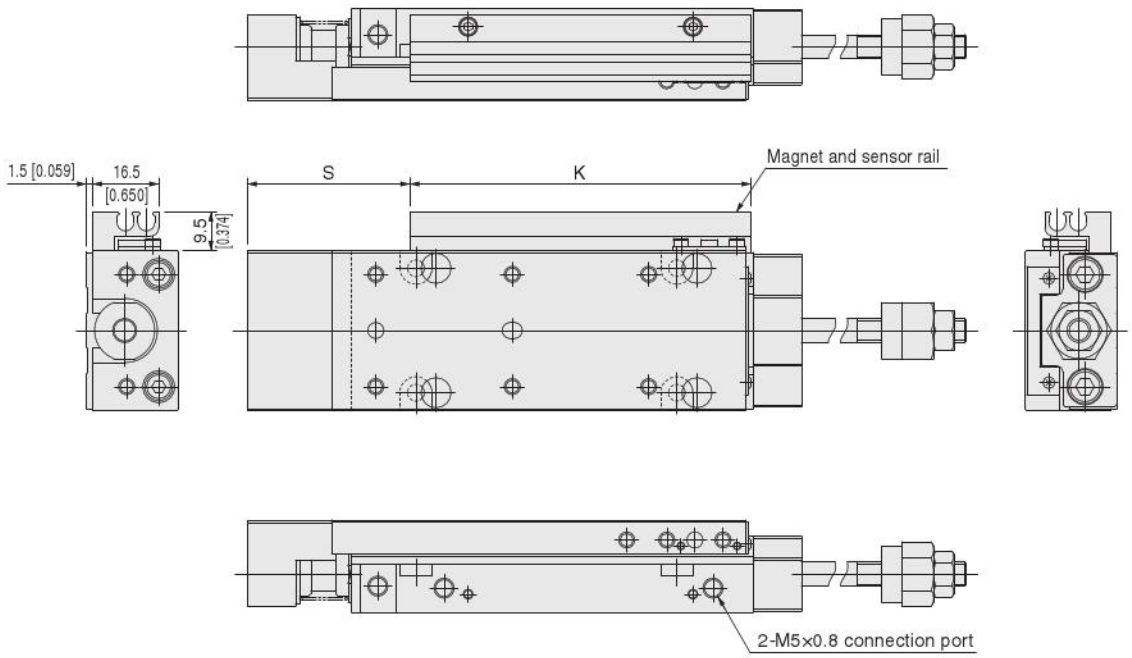

Piping direction: -L

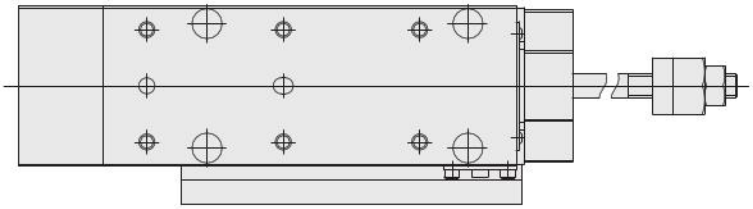

Locating pin: -P (P-MGA2)

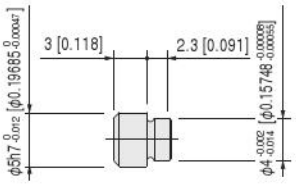

Remark: The buffer stroke of ϕ 16 [0.630] cylinder with buffer is a maximum of 6 mm [0.236 in.].

● Extended/retracted-side stroke adjusting cylinder with buffer

MGAEG16

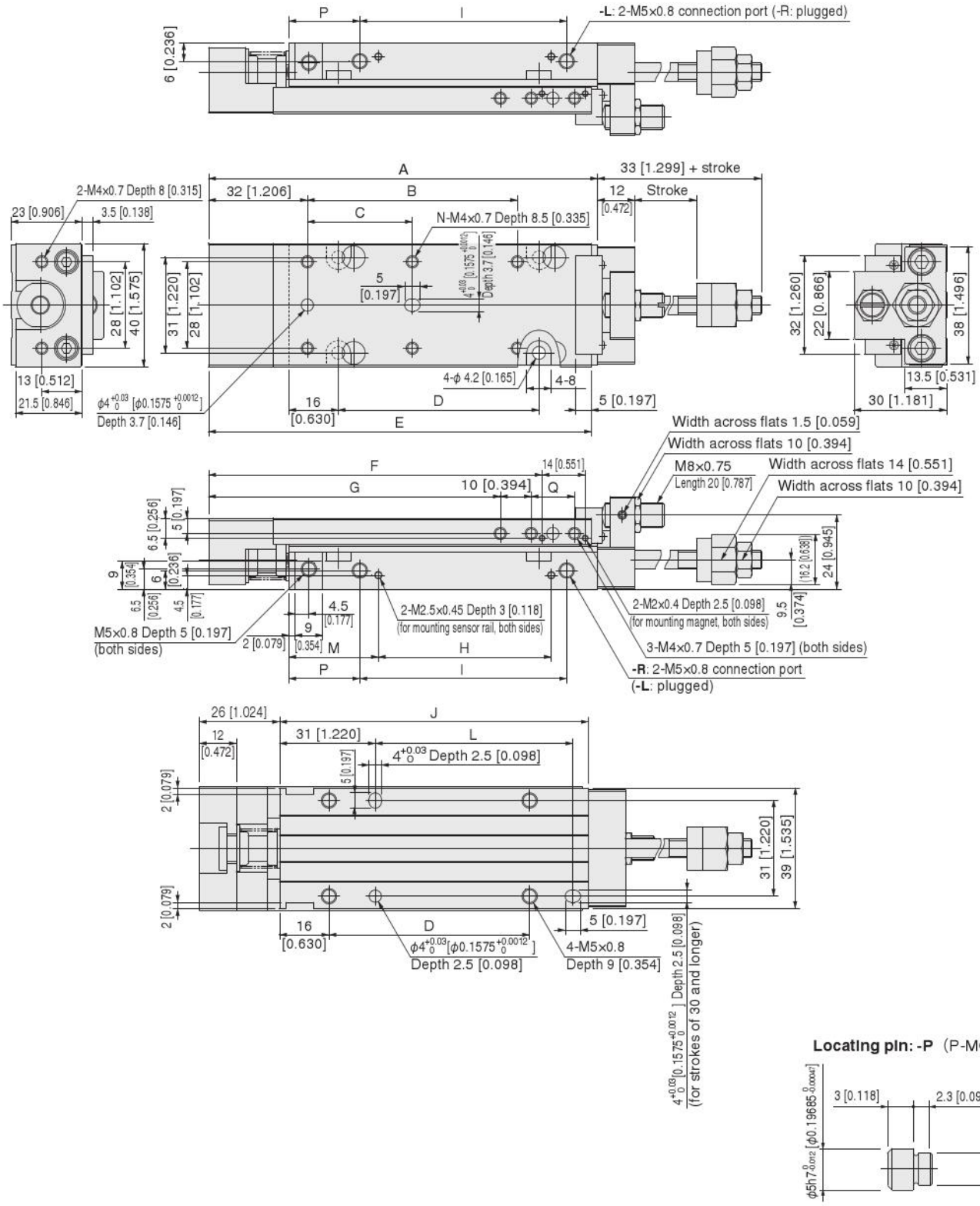

Stroke	A	B	C	D	E	F	G	H	I	J	K	L	M	N	P	Q	S
10, 15, 20	86 [3.386]	—	28 [1.102]	25 [0.984]	84 [3.307]	68 [2.677]	54.5 [2.146]	16 [0.630]	27 [1.063]	60 [2.362]	45 [1.772]	—	29 [1.142]	4	23 [0.906]	14 [0.551]	40.5 [1.594]
30, 40	106 [4.173]	—	48 [1.890]	45 [1.772]	104 [4.094]	88 [3.465]	74.5 [2.933]	36 [1.417]	47 [1.850]	80 [3.150]	65 [2.559]	44 [1.732]	29 [1.142]	4	23 [0.906]	14 [0.551]	40.5 [1.594]
50, 60	126 [4.961]	68 [2.677]	34 [1.339]	65 [2.559]	124 [4.882]	108 [4.252]	94.5 [3.720]	56 [2.205]	67 [2.638]	100 [3.937]	85 [3.346]	64 [2.520]	29 [1.142]	6	23 [0.906]	14 [0.551]	40.5 [1.594]
70, 80	146 [5.748]	88 [3.465]	44 [1.732]	85 [3.346]	144 [5.669]	128 [5.039]	114.5 [4.508]	76 [2.992]	87 [3.425]	120 [4.724]	105 [4.134]	84 [3.307]	29 [1.142]	6	23 [0.906]	14 [0.551]	40.5 [1.594]
90, 100	186 [7.323]	128 [5.039]	64 [2.520]	125 [4.921]	184 [7.244]	168 [6.614]	134.5 [5.295]	121 [4.764]	107 [4.213]	160 [6.299]	150 [5.906]	124 [4.882]	24 [0.945]	6	43 [1.693]	34 [1.339]	35.5 [1.398]

Remark: The buffer stroke of ϕ 16 [0.630] cylinder with buffer is a maximum of 6 mm [0.236 in.].

● **Extended/retracted-side stroke adjusting cylinder with buffer, magnet and sensor rail MGAEGS16**

● **Extended/retracted-side stroke adjusting cylinder with buffer and shock absorber MGAEG□16-SSR**

Piping direction: -R

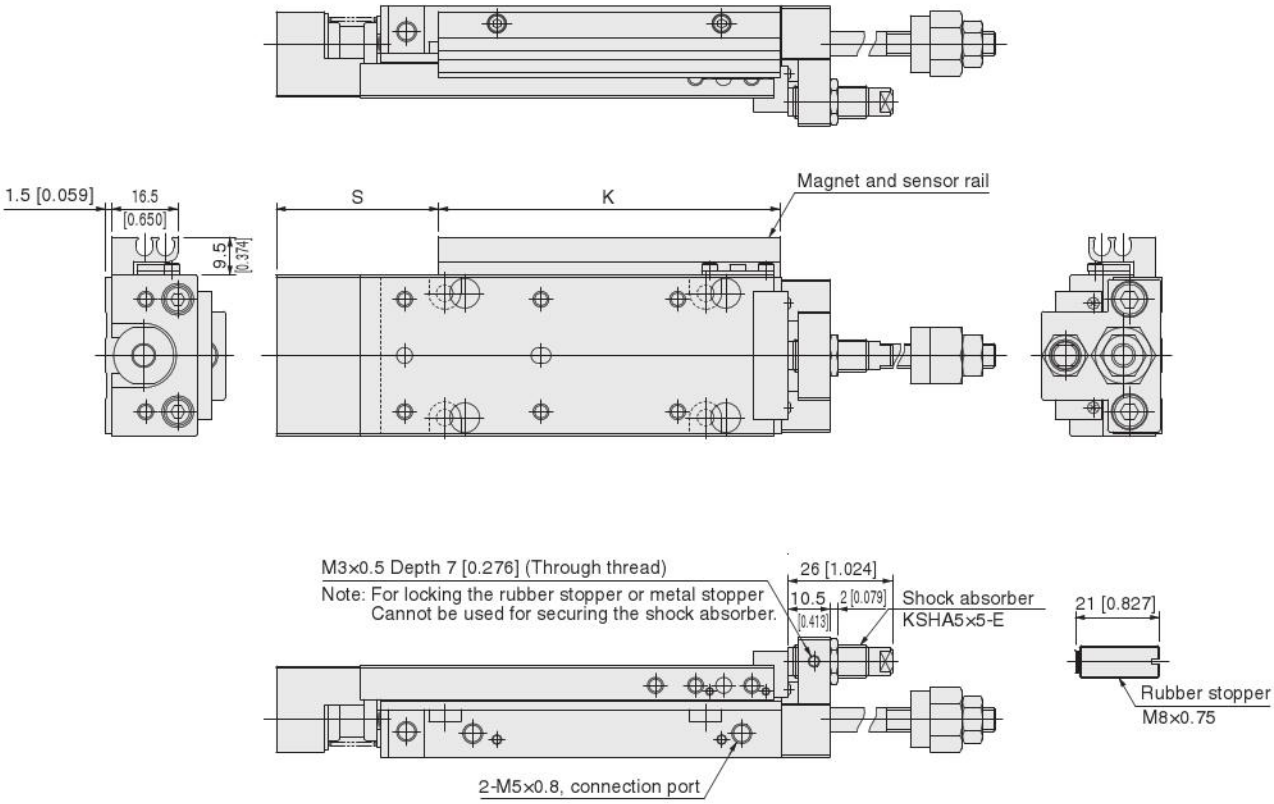

Piping direction: -L

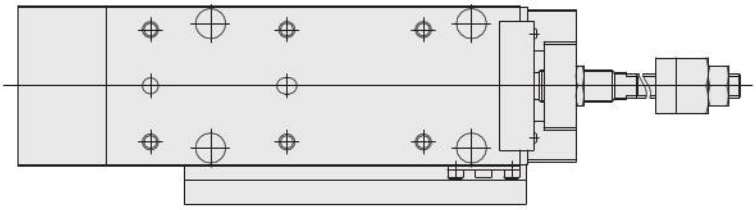

Locating pin: -P (P-MGA2)

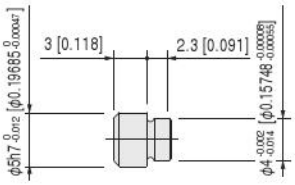

Remark: The buffer stroke of ϕ 16 [0.630] cylinder with buffer is a maximum of 6 mm [0.236 in.].

● Cylinder with end keep

MGAK16

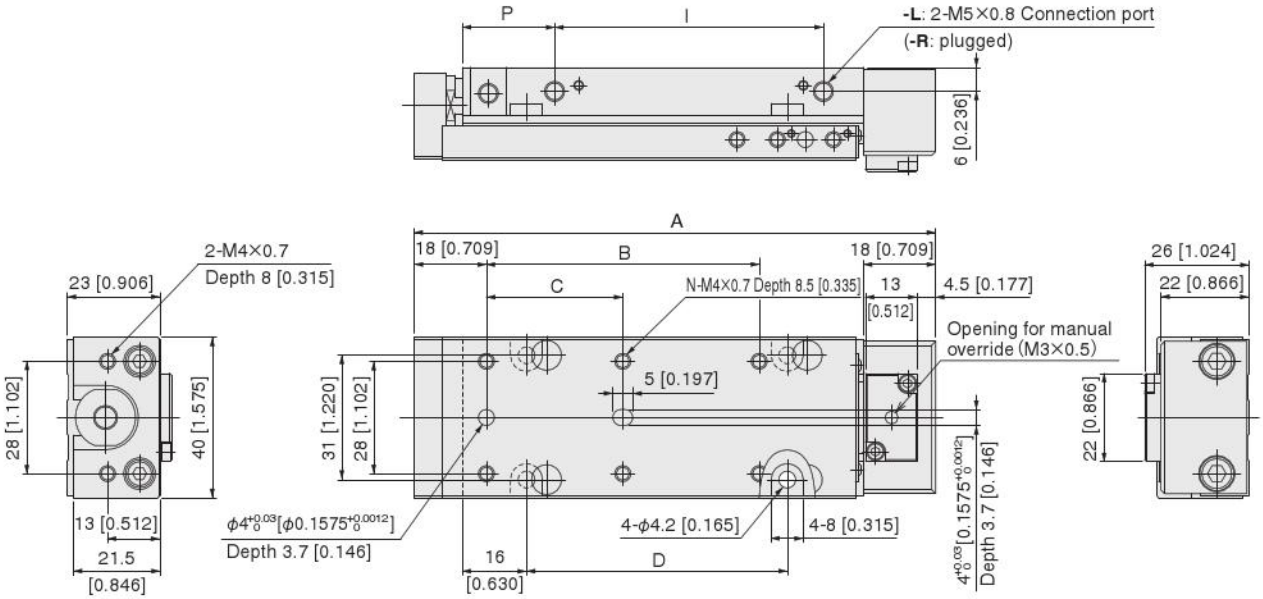

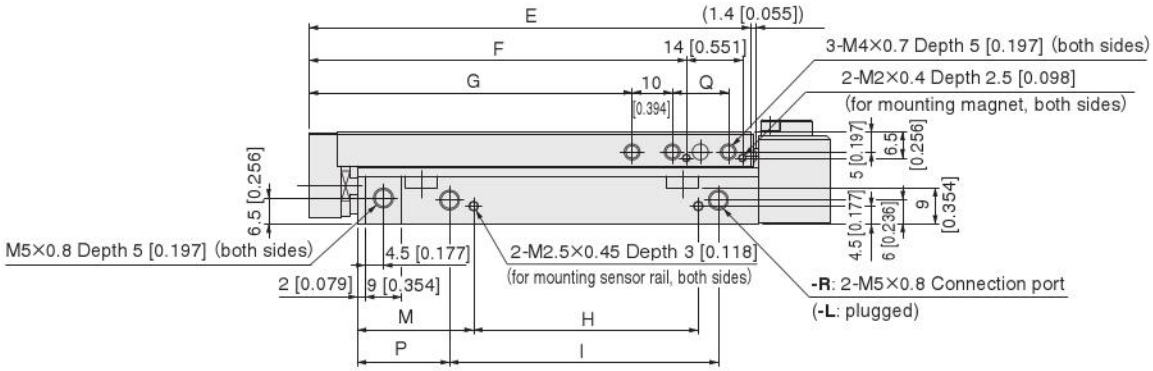

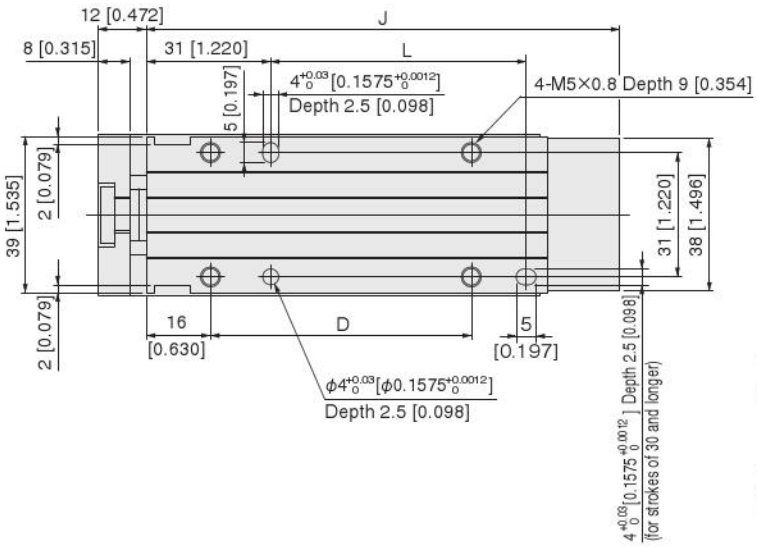

Locating pin: -P (P-MGA2)

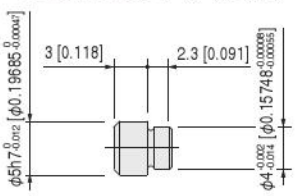

Stroke	A	B	C	D	E	F	G	H	I	J	K	L	M	N	P	Q	S
10, 15, 20	90 [3.543]	—	28 [1.102]	25 [0.984]	70 [2.756]	54 [2.126]	40.5 [1.594]	16 [0.63]	27 [1.063]	78 [3.071]	45 [1.772]	—	29 [1.142]	4	23 [0.906]	14 [0.551]	26.5 [1.043]
30, 40	110 [4.331]	—	48 [1.890]	45 [1.772]	90 [3.543]	74 [2.913]	60.5 [2.382]	36 [1.417]	47 [1.850]	98 [3.858]	65 [2.559]	44 [1.732]	29 [1.142]	4	23 [0.906]	14 [0.551]	26.5 [1.043]
50, 60	130 [5.118]	68 [2.677]	34 [1.339]	65 [2.559]	110 [4.331]	94 [3.701]	80.5 [3.169]	56 [2.205]	67 [2.638]	118 [4.646]	85 [3.346]	64 [2.520]	29 [1.142]	6	23 [0.906]	14 [0.551]	26.5 [1.043]
70, 80	150 [5.906]	88 [3.465]	44 [1.732]	85 [3.346]	130 [5.118]	114 [4.488]	100.5 [3.957]	76 [2.992]	87 [3.425]	138 [5.433]	105 [4.134]	84 [3.307]	29 [1.142]	6	23 [0.906]	14 [0.551]	26.5 [1.043]
90, 100	190 [7.480]	128 [5.039]	64 [2.52]	125 [4.921]	170 [6.693]	154 [6.063]	120.5 [4.744]	121 [4.764]	107 [4.213]	178 [7.008]	150 [5.906]	124 [4.882]	24 [0.945]	6	43 [1.693]	34 [1.339]	21.5 [0.846]

● **Cylinder with end keep, magnet and sensor rail** **MGAKS16**

● **Cylinder with end keep and shock absorber** **MGAK□16-SSF**

Piping direction: -R

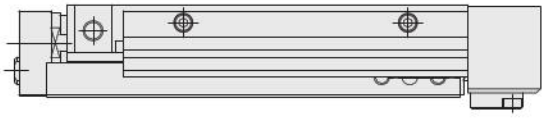

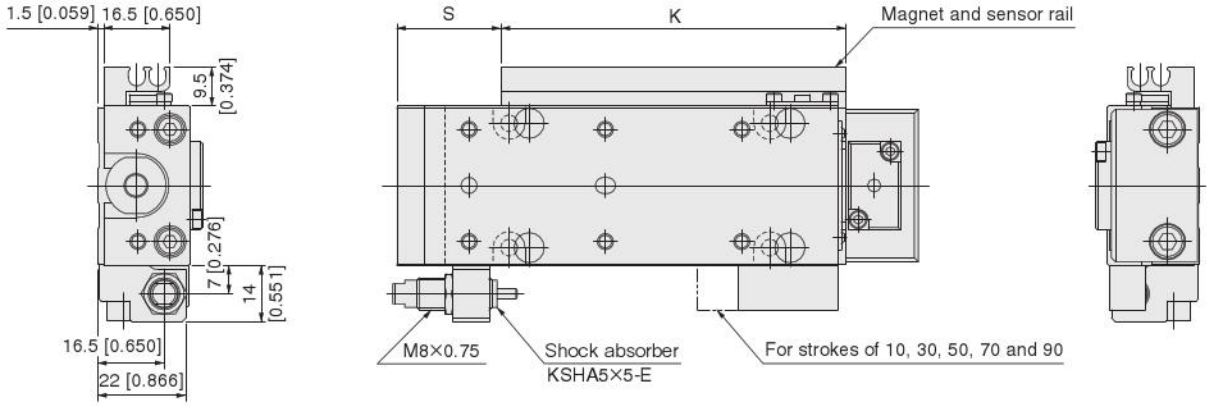

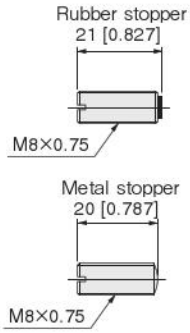

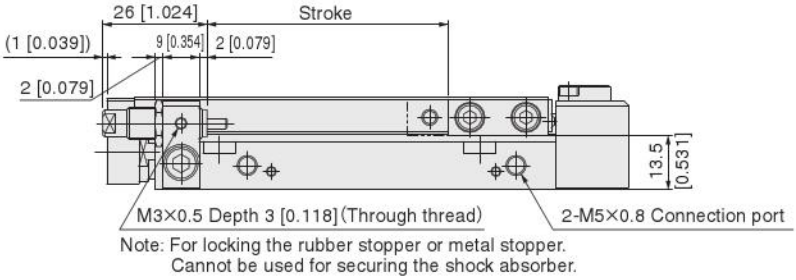

Piping direction: -L

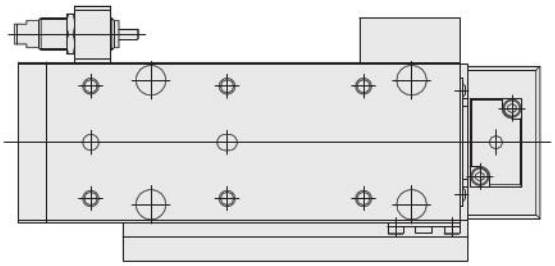

Locating pin: -P (P-MGA2)

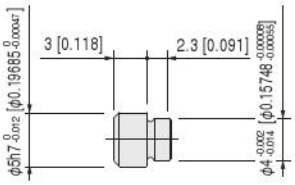

● Cylinder with buffer end keep

MGAGK16

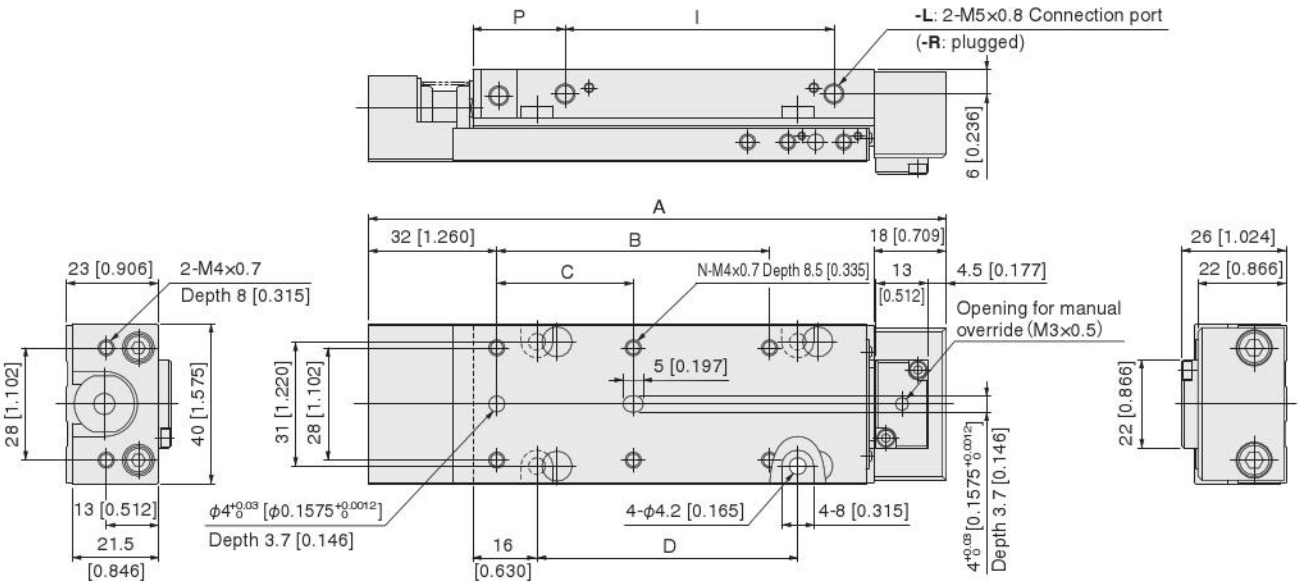

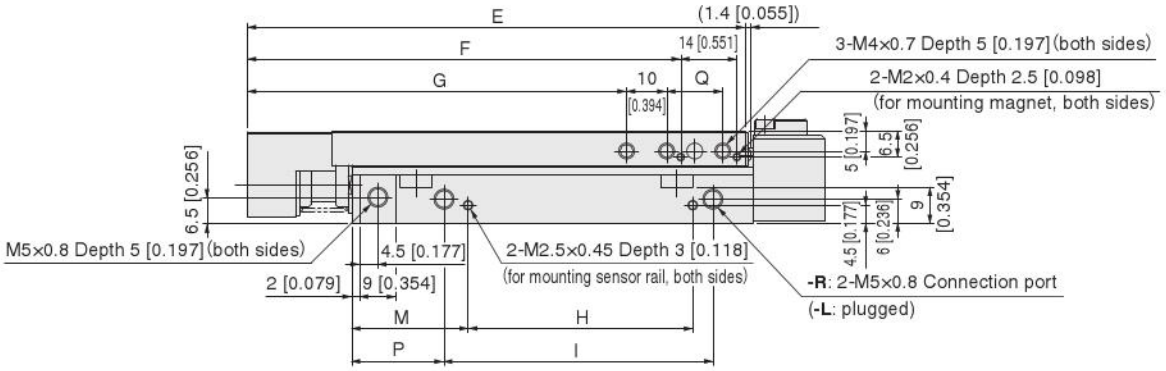

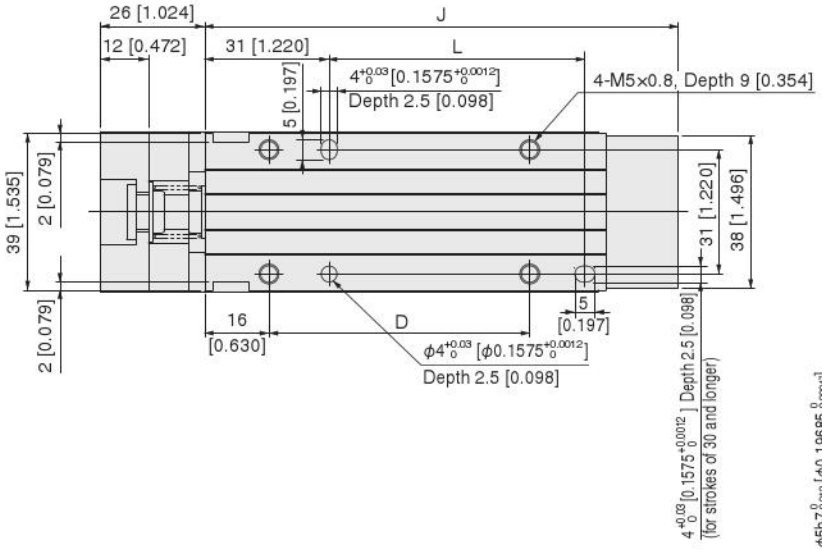

Locating pin: -P (P-MGA2)

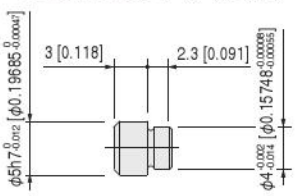

Stroke	A	B	C	D	E	F	G	H	I	J	K	L	M	N	P	Q	S
10, 15, 20	104 [4.094]	—	28 [1.102]	25 [0.984]	84 [3.307]	68 [2.677]	54.5 [2.146]	16 [0.630]	27 [1.063]	78 [3.071]	45 [1.772]	—	29 [1.142]	4	23 [0.906]	14 [0.551]	40.5 [1.594]
30, 40	124 [4.882]	—	48 [1.890]	45 [1.772]	104 [4.094]	88 [3.465]	74.5 [2.933]	36 [1.417]	47 [1.850]	98 [3.858]	65 [2.559]	44 [1.732]	29 [1.142]	4	23 [0.906]	14 [0.551]	40.5 [1.594]
50, 60	144 [5.669]	68 [2.677]	34 [1.339]	65 [2.559]	124 [4.882]	108 [4.252]	94.5 [3.720]	56 [2.205]	67 [2.638]	118 [4.646]	85 [3.346]	64 [2.520]	29 [1.142]	6	23 [0.906]	14 [0.551]	40.5 [1.594]
70, 80	164 [6.457]	88 [3.465]	44 [1.732]	85 [3.346]	144 [5.669]	128 [5.039]	114.5 [4.508]	76 [2.992]	87 [3.425]	138 [5.433]	105 [4.134]	84 [3.307]	29 [1.142]	6	23 [0.906]	14 [0.551]	40.5 [1.594]
90, 100	204 [8.031]	128 [5.039]	64 [2.520]	125 [4.921]	184 [7.244]	168 [6.614]	134.5 [5.295]	121 [4.764]	107 [4.213]	178 [7.008]	150 [5.906]	124 [4.882]	24 [0.945]	6	43 [1.693]	34 [1.339]	35.5 [1.398]

Remark: The buffer stroke of ϕ 16 [0.630] cylinder with buffer is a maximum of 6 mm [0.236 in.].

● **Cylinder with buffer end keep, magnet and sensor rail**

MGAGKS16

Piping direction: -R

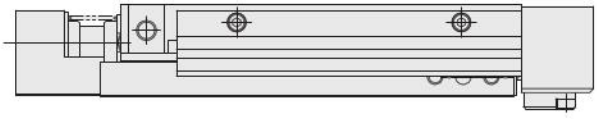

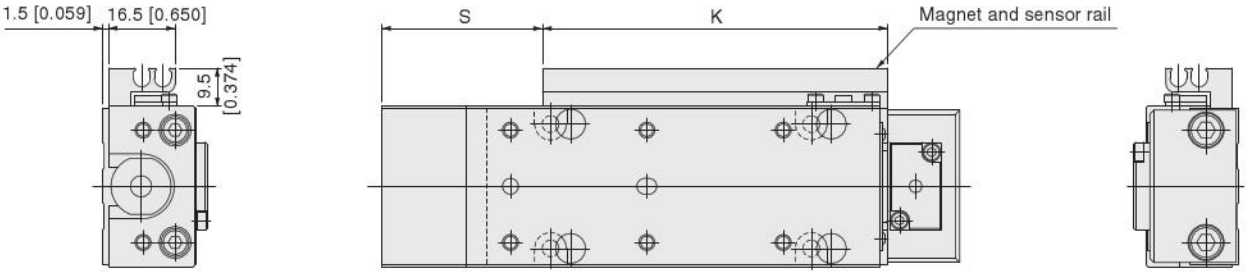

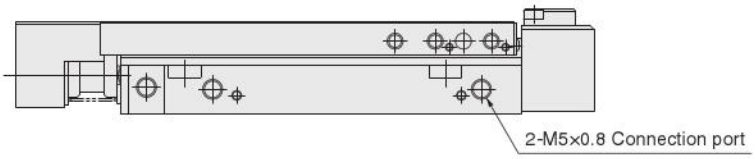

Piping direction: -L

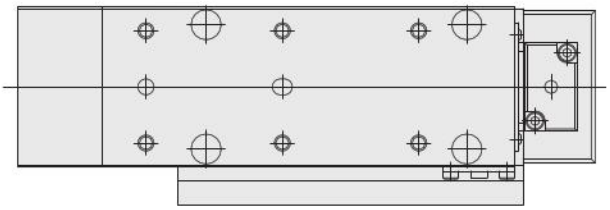

Locating pin: -P (P-MGA2)

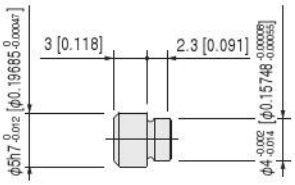

Remark: The buffer stroke of ϕ 16 [0.630] cylinder with buffer is a maximum of 6 mm [0.236 in.].

● Standard cylinder, rear piping specifications

MGAH16

Piping direction: -R

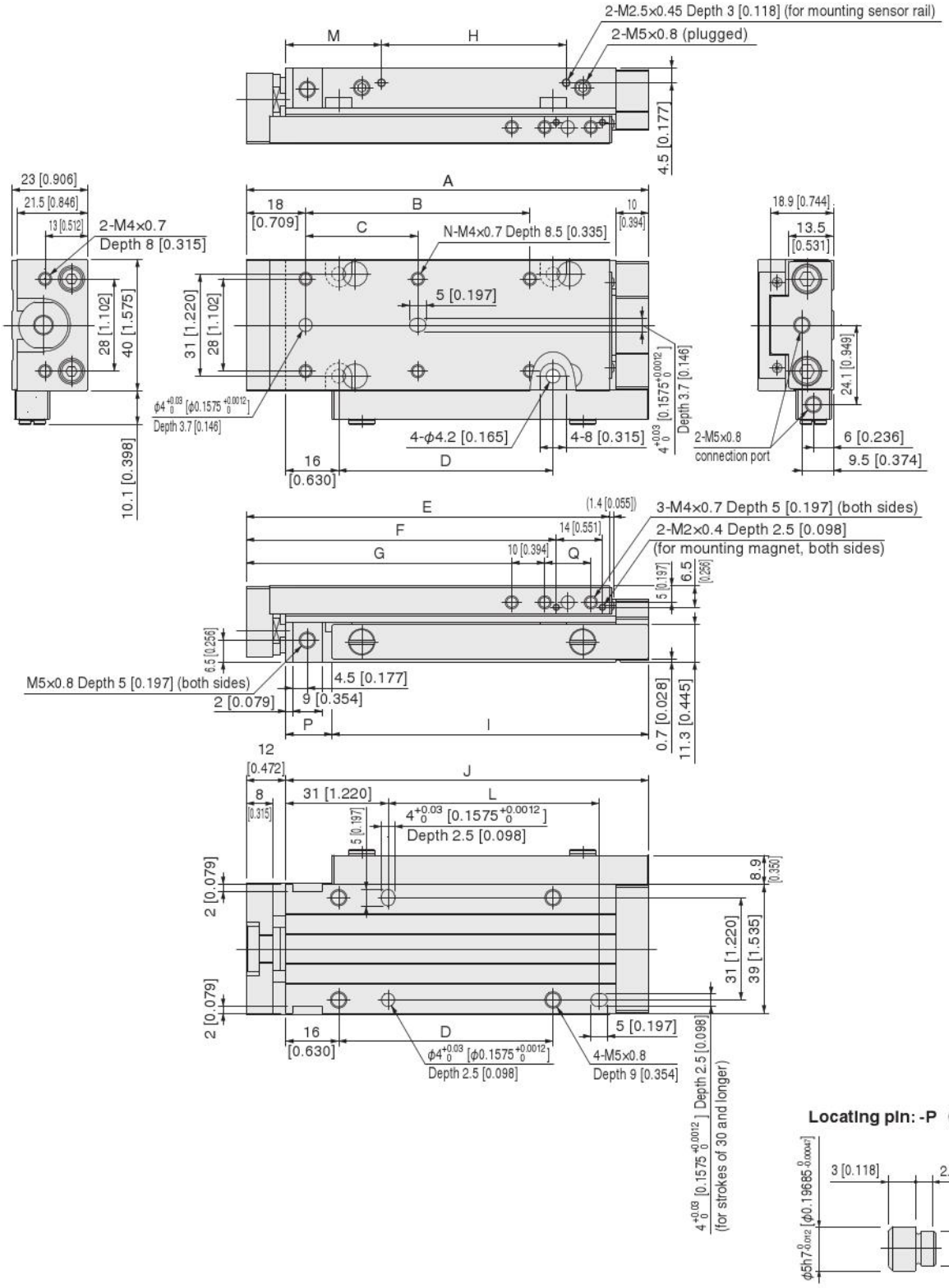

Stroke	A	B	C	D	E	F	G	H	I	J	K	L	M	N	P	Q	S
10, 15, 20	82 [3.228]	—	28 [1.102]	25 [0.984]	70 [2.756]	54 [2.126]	40.5 [1.594]	16 [0.630]	56 [2.205]	70 [2.756]	45 [1.772]	—	29 [1.142]	4	14 [0.551]	14 [0.551]	26.5 [1.043]
30, 40	102 [4.016]	—	48 [1.890]	45 [1.772]	90 [3.543]	74 [2.913]	60.5 [2.382]	36 [1.417]	76 [2.992]	90 [3.543]	65 [2.559]	44 [1.732]	29 [1.142]	4	14 [0.551]	14 [0.551]	26.5 [1.043]
50, 60	122 [4.803]	68 [2.677]	34 [1.339]	65 [2.559]	110 [4.331]	94 [3.701]	80.5 [3.169]	56 [2.205]	96 [3.780]	110 [4.331]	85 [3.346]	64 [2.520]	29 [1.142]	6	14 [0.551]	14 [0.551]	26.5 [1.043]
70, 80	142 [5.591]	88 [3.465]	44 [1.732]	85 [3.346]	130 [5.118]	114 [4.488]	100.5 [3.957]	76 [2.992]	116 [4.567]	130 [5.118]	105 [4.134]	84 [3.307]	29 [1.142]	6	14 [0.551]	14 [0.551]	26.5 [1.043]
90, 100	182 [7.165]	128 [5.039]	64 [2.52]	125 [4.921]	170 [6.693]	154 [6.063]	120.5 [4.744]	121 [4.764]	136 [5.354]	170 [6.693]	150 [5.906]	124 [4.882]	24 [0.945]	6	34 [1.339]	34 [1.339]	21.5 [0.846]

● **Cylinder with magnet and sensor rail MGAHS16**

● **Cylinder with shock absorber MGAH□16-SSF**

Piping direction: -R

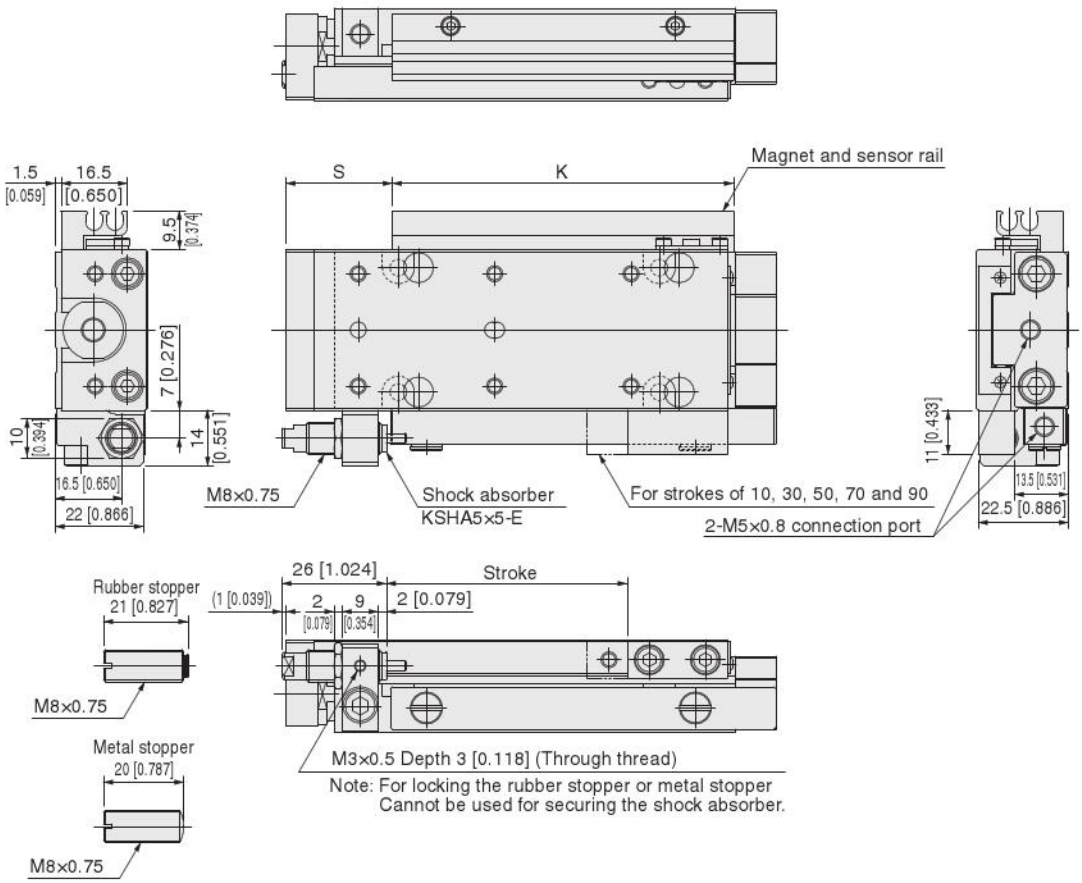

Piping direction: -L

Without options

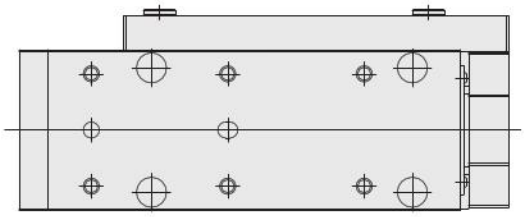

With sensor rail and shock absorber

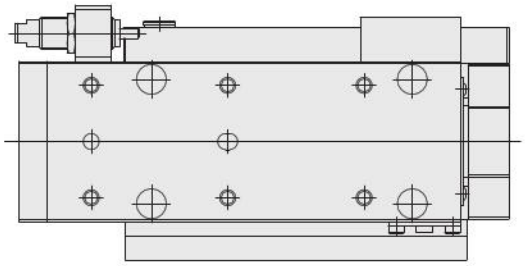

Locating pin: -P (P-MGA2)

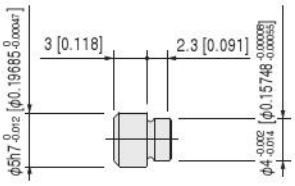

● Cylinder with buffer, rear piping specifications

MGAGH16

Piping direction: -R

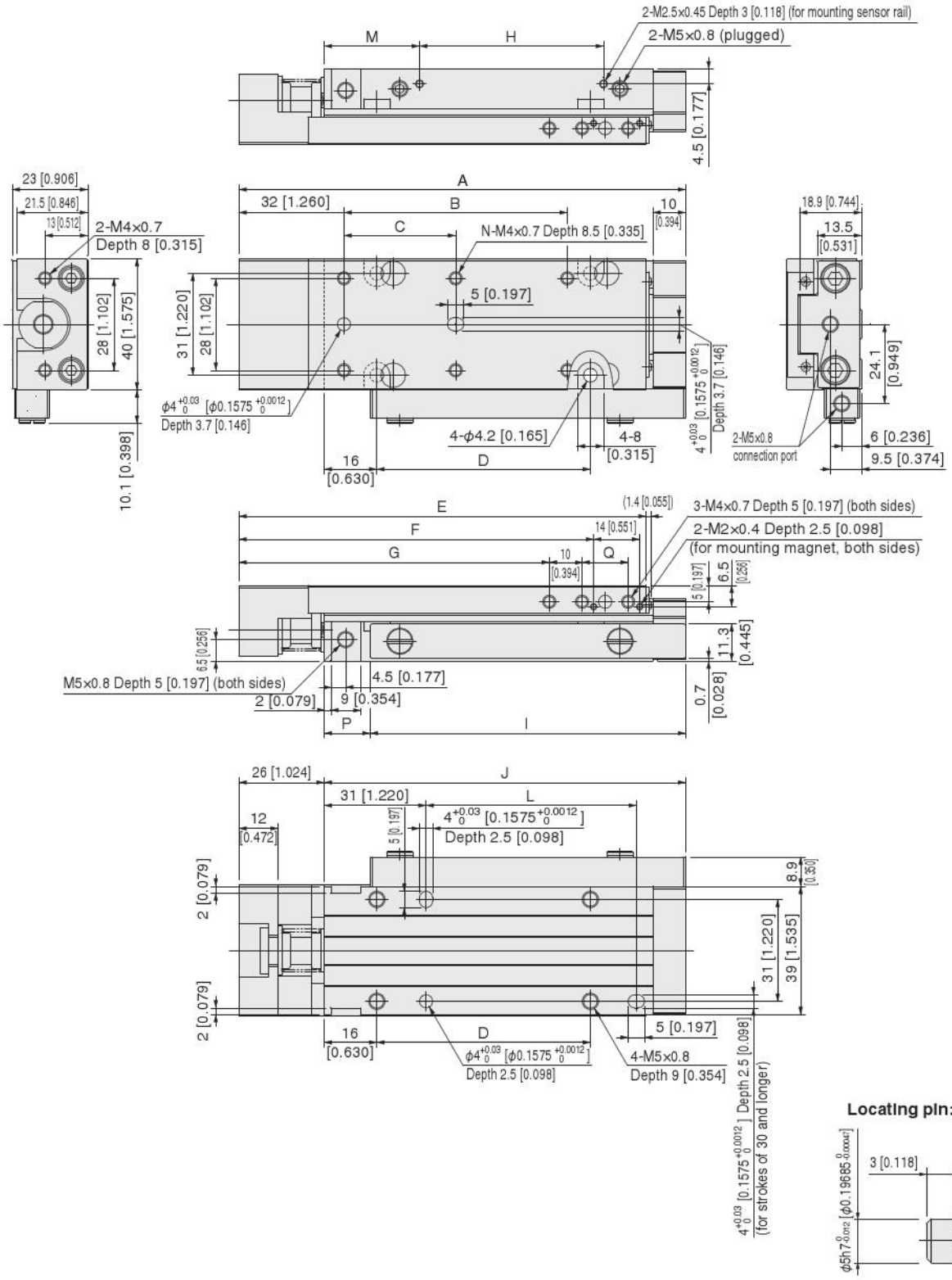

Stroke	A	B	C	D	E	F	G	H	I	J	K	L	M	N	P	Q	S
10, 15, 20	96 [3.780]	—	28 [1.102]	25 [0.984]	84 [3.307]	68 [2.677]	54.5 [2.146]	16 [0.630]	56 [2.205]	70 [2.756]	45 [1.772]	—	29 [1.142]	4	14 [0.551]	14 [0.551]	40.5 [1.594]
30, 40	116 [4.567]	—	48 [1.890]	45 [1.772]	104 [4.094]	88 [3.465]	74.5 [2.933]	36 [1.417]	76 [2.992]	90 [3.543]	65 [2.559]	44 [1.732]	29 [1.142]	4	14 [0.551]	14 [0.551]	40.5 [1.594]
50, 60	136 [5.354]	68 [2.677]	34 [1.339]	65 [2.559]	124 [4.882]	108 [4.252]	94.5 [3.720]	56 [2.205]	96 [3.780]	110 [4.331]	85 [3.346]	64 [2.520]	29 [1.142]	6	14 [0.551]	14 [0.551]	40.5 [1.594]
70, 80	156 [6.142]	88 [3.465]	44 [1.732]	85 [3.346]	144 [5.669]	128 [5.039]	114.5 [4.508]	76 [2.992]	116 [4.567]	130 [5.118]	105 [4.134]	84 [3.307]	29 [1.142]	6	14 [0.551]	14 [0.551]	40.5 [1.594]
90, 100	196 [7.717]	128 [5.039]	64 [2.52]	125 [4.921]	184 [7.244]	168 [6.614]	134.5 [5.295]	121 [4.764]	136 [5.354]	170 [6.693]	150 [5.906]	124 [4.882]	24 [0.945]	6	34 [1.339]	34 [1.339]	35.5 [1.398]

Remark: The buffer stroke of ϕ 16 [0.630] cylinder with buffer is a maximum of 6 mm [0.236 in.].

● Cylinder with buffer, magnet and sensor rail

MGAGHS16

Piping direction: -R

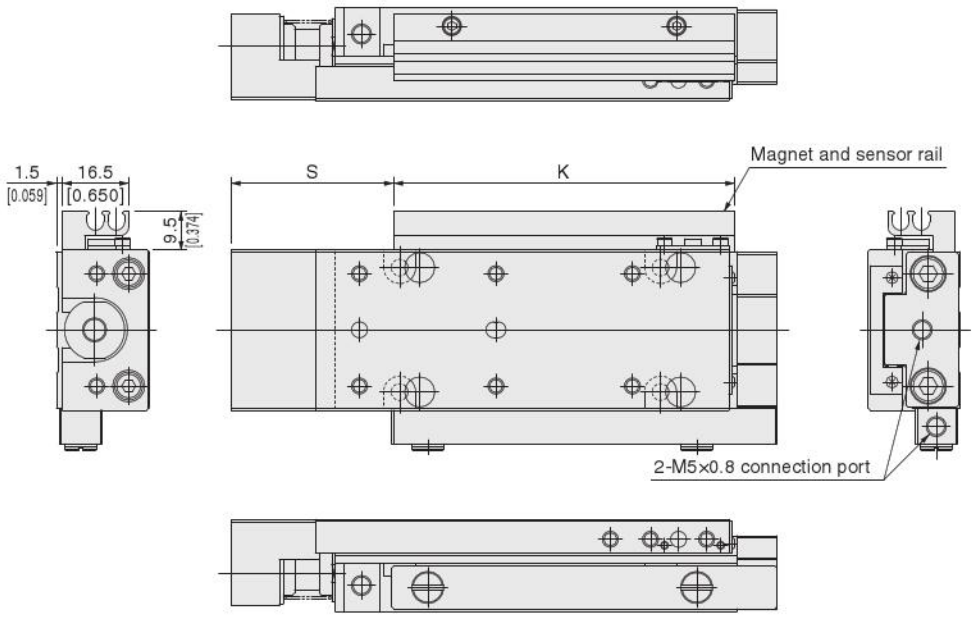

Piping direction: -L

Without options

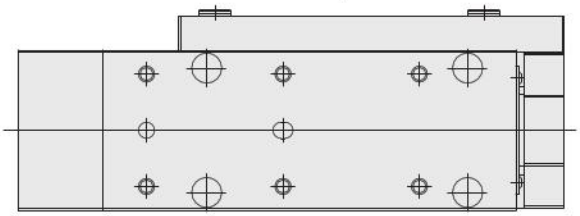

With magnet and sensor rail

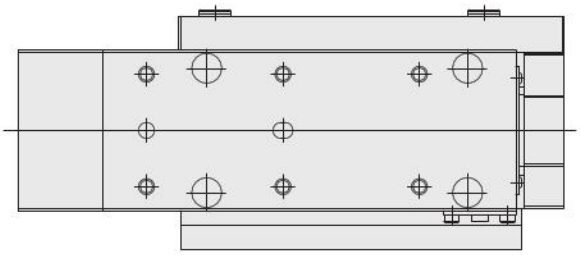

Locating pin: -P (P-MGA2)

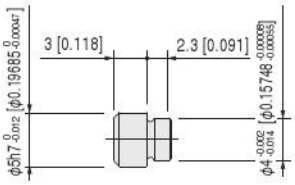

Remark: The buffer stroke of ϕ 16 [0.630] cylinder with buffer is a maximum of 6 mm [0.236 in.].

● Standard cylinder

MGA20

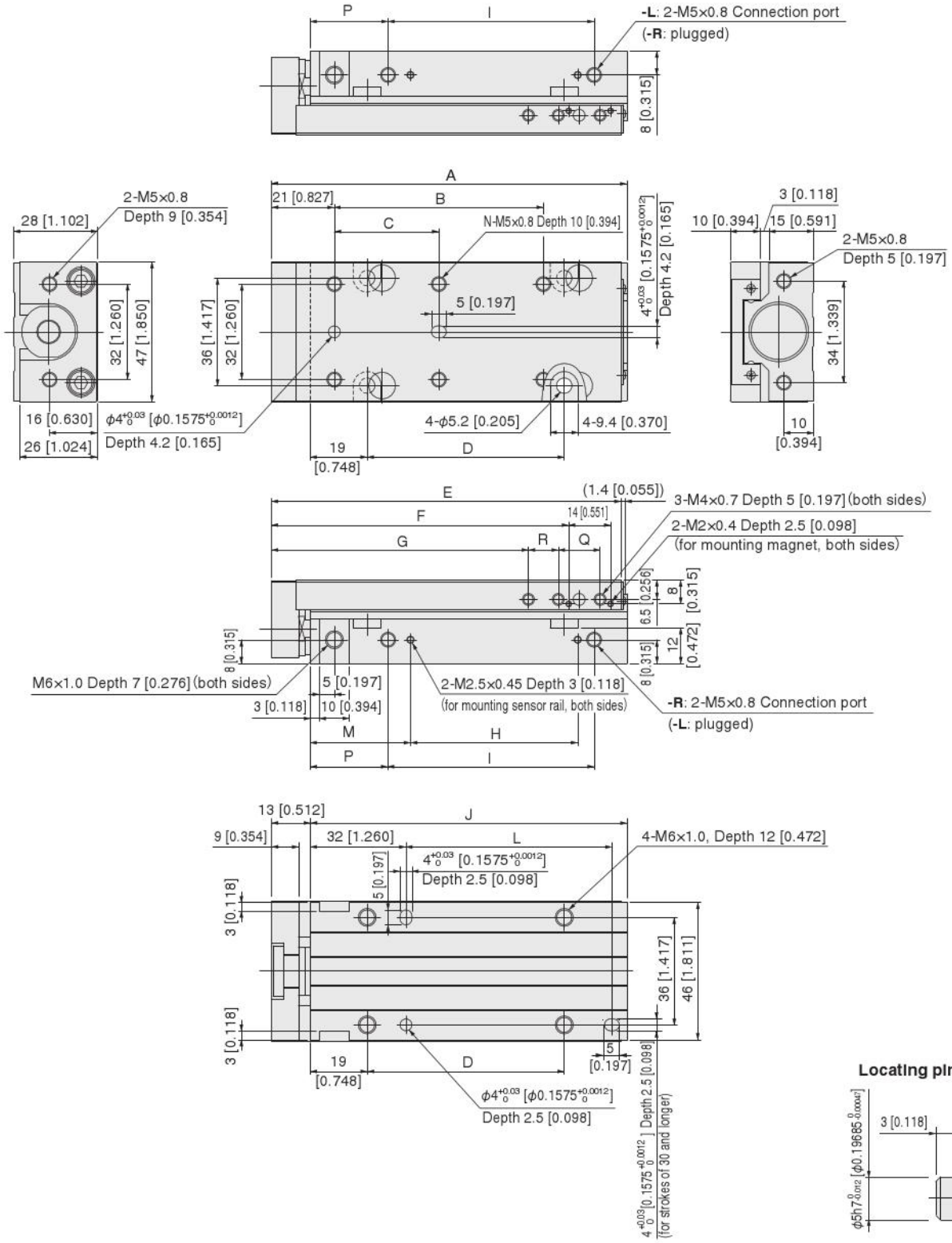

Stroke	A	B	C	D	E	F	G	H	I	J	K	L	M	N	P	Q	R	S
10, 15, 20	79 [3.110]	—	30 [1.181]	26 [1.024]	77 [3.031]	59.5 [2.343]	46 [1.811]	16 [0.630]	29 [1.142]	66 [2.598]	45 [1.772]	—	33.5 [1.319]	4	26 [1.024]	14 [0.551]	10 [0.394]	32 [1.260]
30, 40	99 [3.898]	—	50 [1.969]	46 [1.811]	97 [3.819]	79.5 [3.130]	66 [2.598]	36 [1.417]	49 [1.929]	86 [3.386]	65 [2.559]	45 [1.772]	33.5 [1.319]	4	26 [1.024]	14 [0.551]	10 [0.394]	32 [1.260]
50, 60	119 [4.685]	70 [2.756]	35 [1.378]	66 [2.598]	117 [4.606]	99.5 [3.917]	86 [3.386]	56 [2.205]	69 [2.717]	106 [4.173]	85 [3.346]	65 [2.559]	33.5 [1.319]	6	26 [1.024]	14 [0.551]	10 [0.394]	32 [1.260]
70, 80	139 [5.472]	90 [3.543]	45 [1.772]	86 [3.386]	137 [5.394]	119.5 [4.705]	106 [4.173]	76 [2.992]	89 [3.504]	126 [4.961]	105 [4.134]	85 [3.346]	33.5 [1.319]	6	26 [1.024]	14 [0.551]	10 [0.394]	32 [1.260]
90, 100, 120, 125	204 [8.031]	150 [5.906]	75 [2.953]	151 [5.945]	202 [7.953]	184.5 [7.264]	136 [5.354]	121 [4.764]	134 [5.276]	191 [7.520]	150 [5.906]	150 [5.906]	53.5 [2.106]	6	46 [1.811]	34 [1.339]	25 [0.984]	52 [2.047]

Dimensions of Bore Size ϕ20 [0.787] mm [in.]

- **Cylinder with magnet and sensor rail MGAS20**
- **Cylinder with shock absorber MGA□20-SS□**

Piping direction: -R

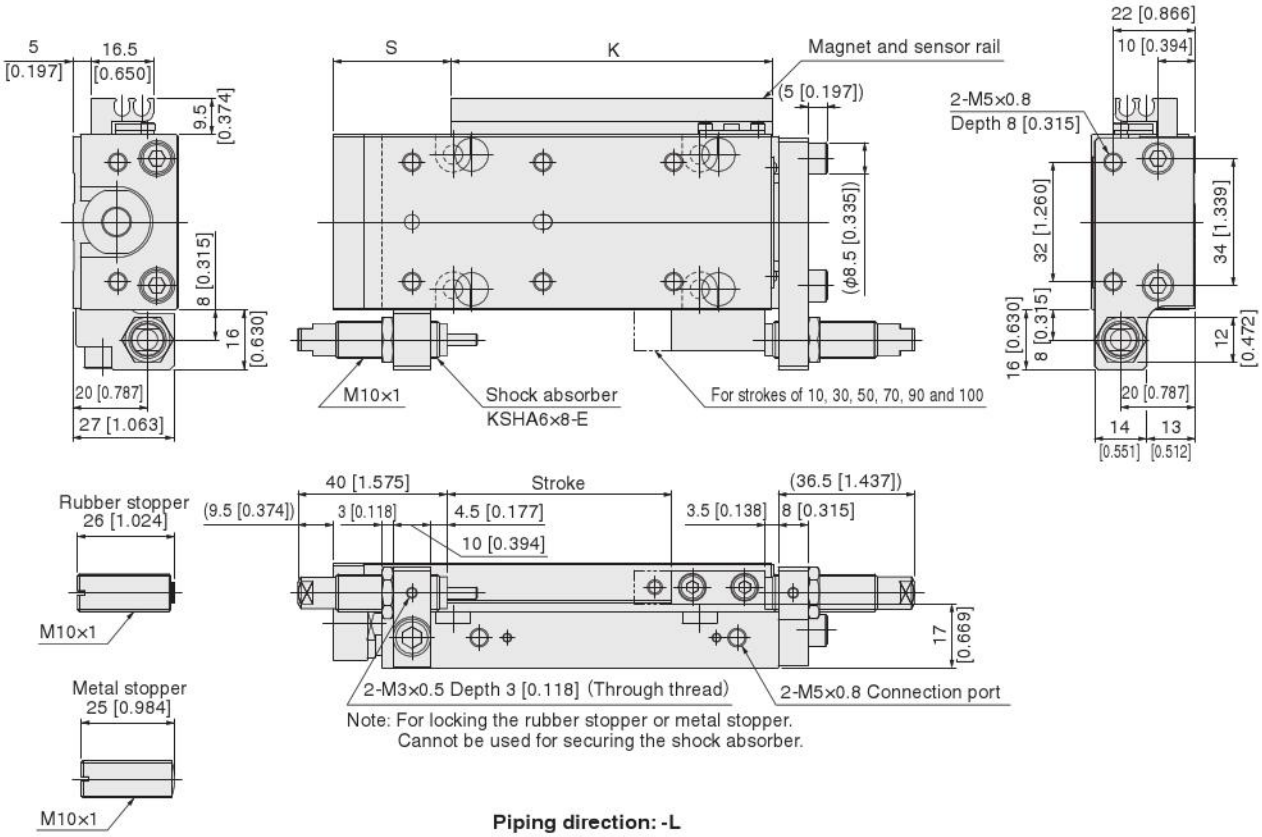

Piping direction: -L

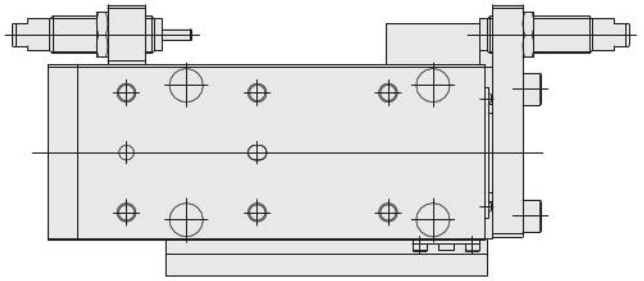

Locating pin: -P (P-MGA2)

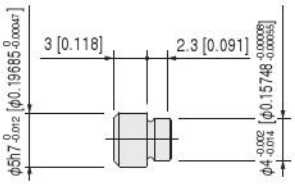

● Extended side stroke adjusting cylinder

MGAP20

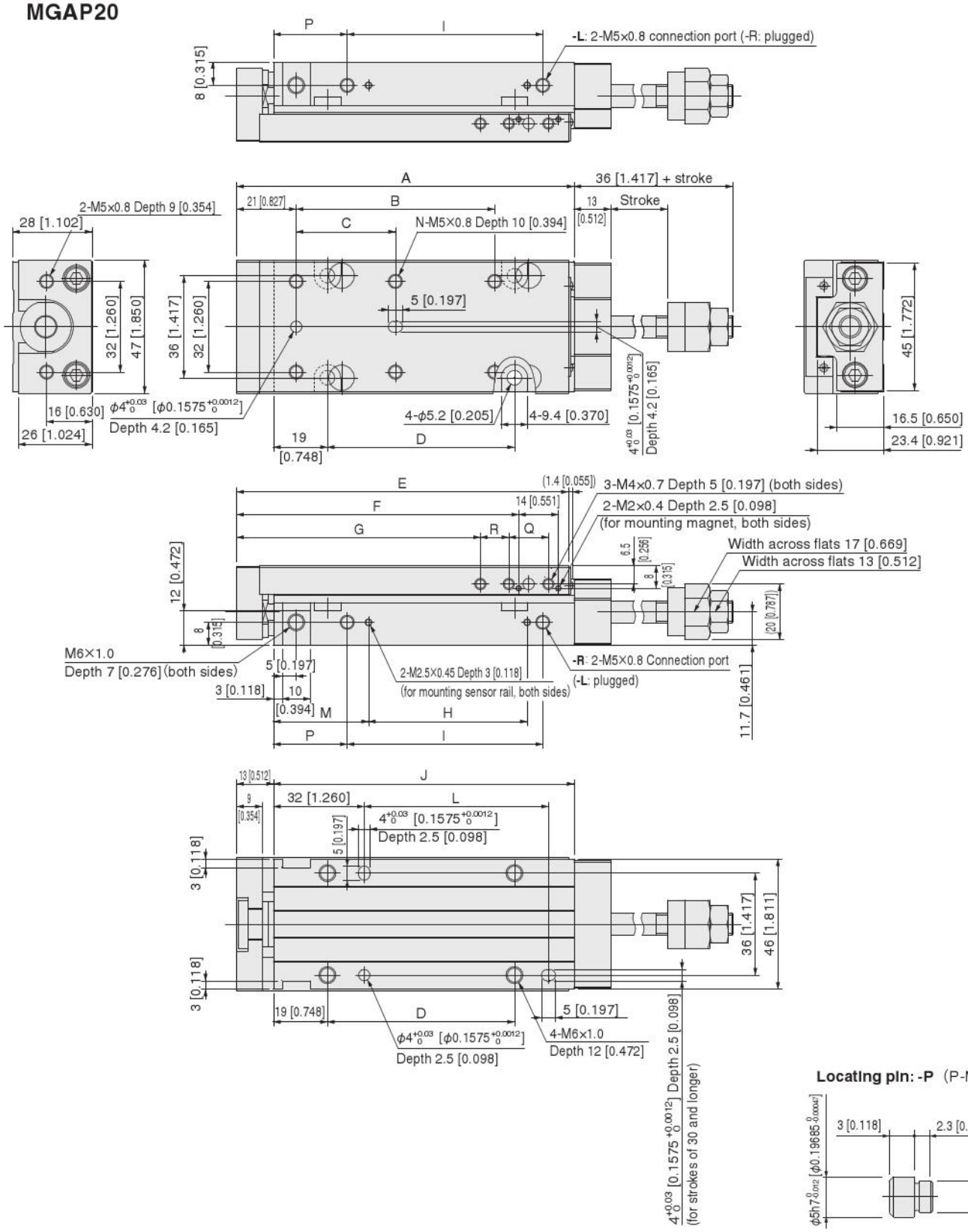

Stroke	A	B	C	D	E	F	G	H	I	J	K	L	M	N	P	Q	R	S
10, 15, 20	79 [3.110]	—	30 [1.181]	26 [1.024]	77 [3.031]	59.5 [2.343]	46 [1.811]	16 [0.630]	29 [1.142]	66 [2.598]	45 [1.772]	—	33.5 [1.319]	4	26 [1.024]	14 [0.551]	10 [0.394]	32 [1.260]
30, 40	99 [3.898]	—	50 [1.969]	46 [1.811]	97 [3.819]	79.5 [3.130]	66 [2.598]	36 [1.417]	49 [1.929]	86 [3.386]	65 [2.559]	45 [1.772]	33.5 [1.319]	4	26 [1.024]	14 [0.551]	10 [0.394]	32 [1.260]
50, 60	119 [4.685]	70 [2.756]	35 [1.378]	66 [2.598]	117 [4.606]	99.5 [3.917]	86 [3.386]	56 [2.205]	69 [2.717]	106 [4.173]	85 [3.346]	65 [2.559]	33.5 [1.319]	6	26 [1.024]	14 [0.551]	10 [0.394]	32 [1.260]
70, 80	139 [5.472]	90 [3.543]	45 [1.772]	86 [3.386]	137 [5.394]	119.5 [4.705]	106 [4.173]	76 [2.992]	89 [3.504]	126 [4.961]	105 [4.134]	85 [3.346]	33.5 [1.319]	6	26 [1.024]	14 [0.551]	10 [0.394]	32 [1.260]
90, 100, 120, 125	204 [8.031]	150 [5.906]	75 [2.953]	151 [5.945]	202 [7.953]	184.5 [7.264]	136 [5.354]	121 [4.764]	134 [5.276]	191 [7.520]	150 [5.906]	150 [5.906]	53.5 [2.106]	6	46 [1.811]	34 [1.339]	25 [0.984]	52 [2.047]

● **Extended side stroke adjusting cylinder with magnet and sensor rail MGAPS20**

● **Extended side stroke adjusting cylinder with shock absorber MGAP□20-SSF**

Piping direction: -R

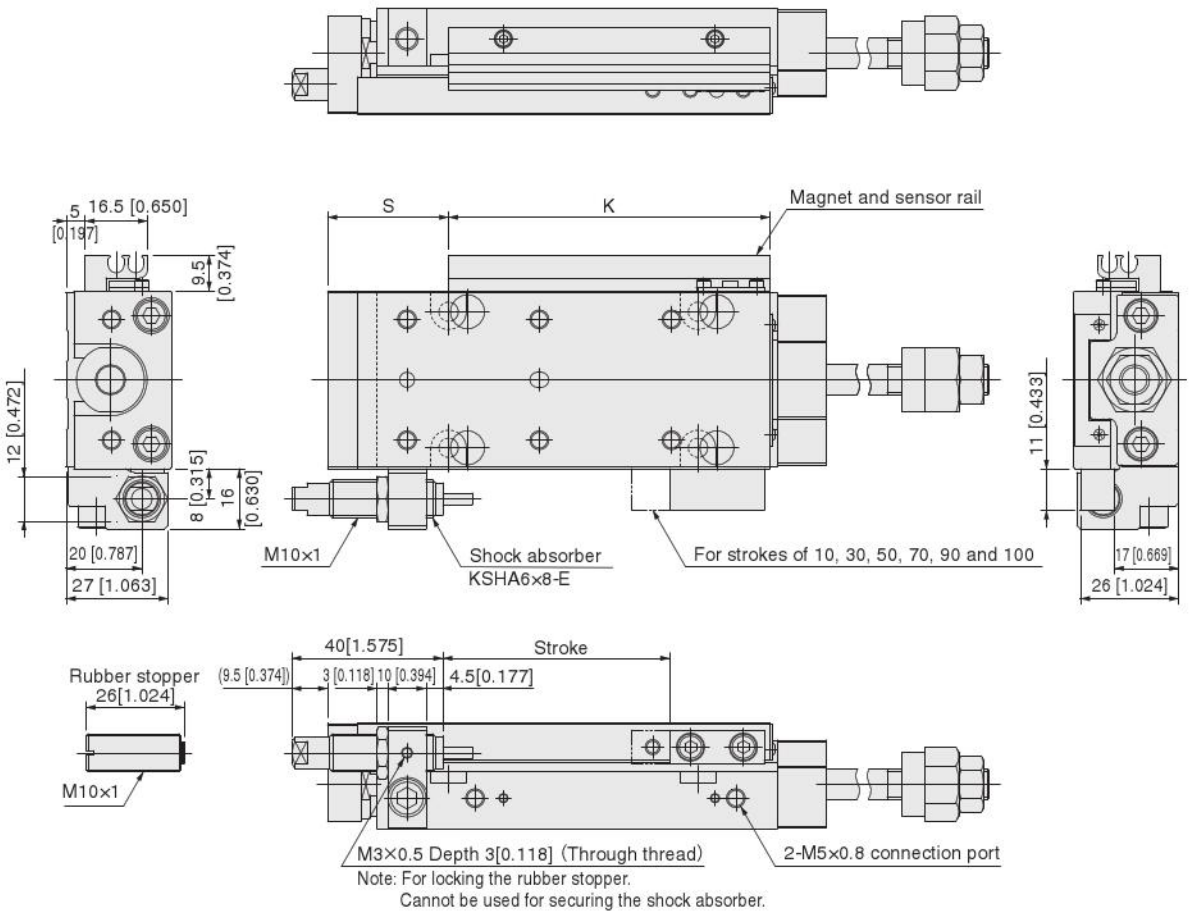

Piping direction: -L

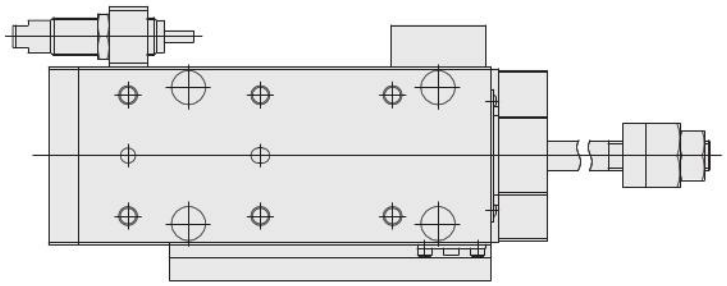

Locating pin: -P (P-MGA2)

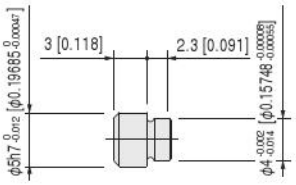

● Extended/retracted-side stroke adjusting cylinder

MGAE20

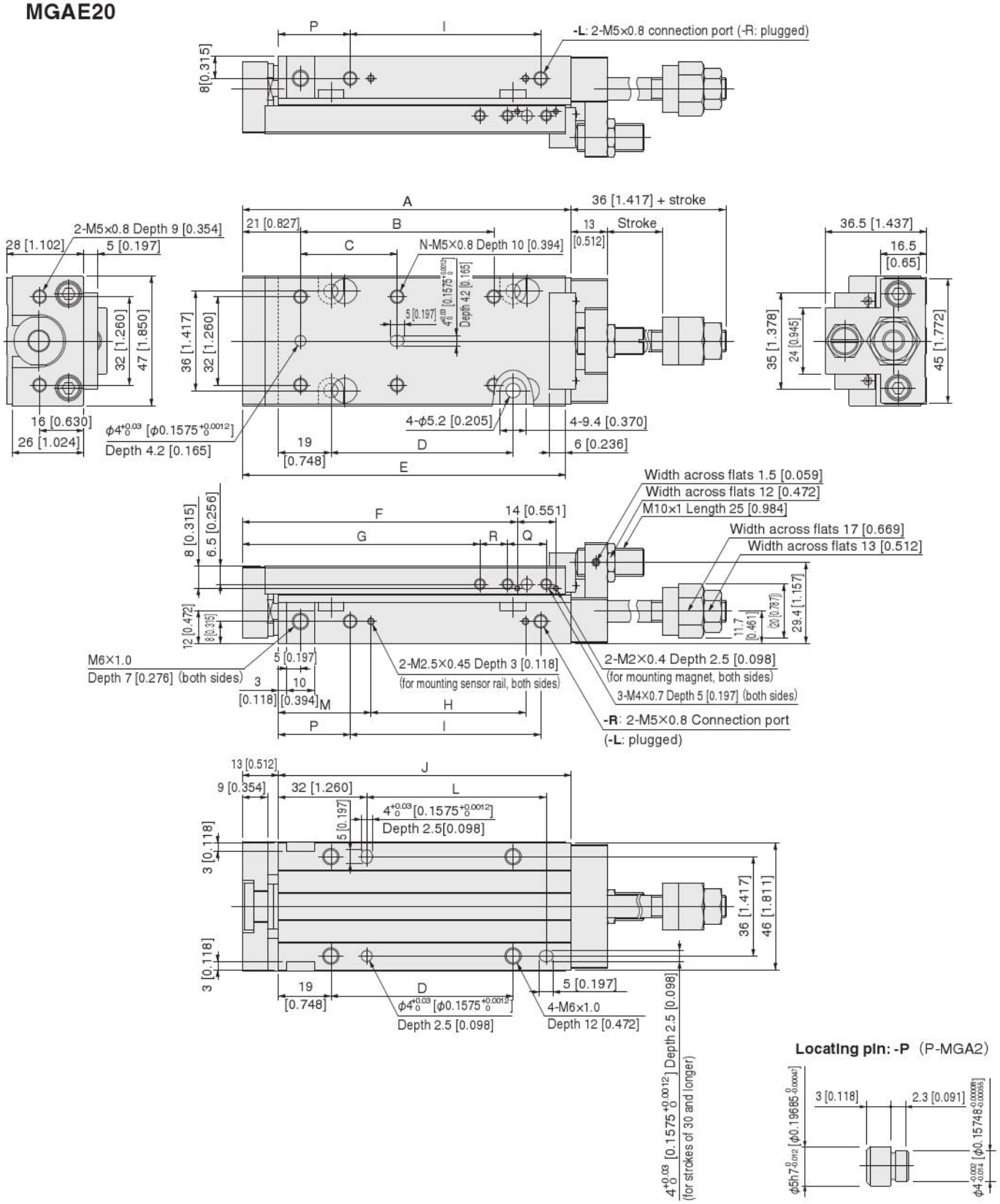

Stroke	A	B	C	D	E	F	G	H	I	J	K	L	M	N	P	Q	R	S
10, 15, 20	79 [3.110]	—	30 [1.181]	26 [1.024]	77 [3.031]	59.5 [2.343]	46 [1.811]	16 [0.630]	29 [1.142]	66 [2.598]	45 [1.772]	—	33.5 [1.319]	4	26 [1.024]	14 [0.551]	10 [0.394]	32 [1.260]
30, 40	99 [3.898]	—	50 [1.969]	46 [1.811]	97 [3.819]	79.5 [3.130]	66 [2.598]	36 [1.417]	49 [1.929]	86 [3.386]	65 [2.559]	45 [1.772]	33.5 [1.319]	4	26 [1.024]	14 [0.551]	10 [0.394]	32 [1.260]
50, 60	119 [4.685]	70 [2.756]	35 [1.378]	66 [2.598]	117 [4.606]	99.5 [3.917]	86 [3.386]	56 [2.205]	69 [2.717]	106 [4.173]	85 [3.346]	65 [2.559]	33.5 [1.319]	6	26 [1.024]	14 [0.551]	10 [0.394]	32 [1.260]
70, 80	139 [5.472]	90 [3.543]	45 [1.772]	86 [3.386]	137 [5.394]	119.5 [4.705]	106 [4.173]	76 [2.992]	89 [3.504]	126 [4.961]	105 [4.134]	85 [3.346]	33.5 [1.319]	6	26 [1.024]	14 [0.551]	10 [0.394]	32 [1.260]
90, 100, 120, 125	204 [8.031]	150 [5.906]	75 [2.953]	151 [5.945]	202 [7.953]	184.5 [7.264]	136 [5.354]	121 [4.764]	134 [5.276]	191 [7.520]	150 [5.906]	150 [5.906]	53.5 [2.106]	6	46 [1.811]	34 [1.339]	25 [0.984]	52 [2.047]

● **Extended/retracted-side stroke adjusting cylinder with magnet and sensor rail MGAES20**

● **Extended/retracted-side stroke adjusting cylinder with shock absorber MGAE□20-SS□**

Piping direction: -R

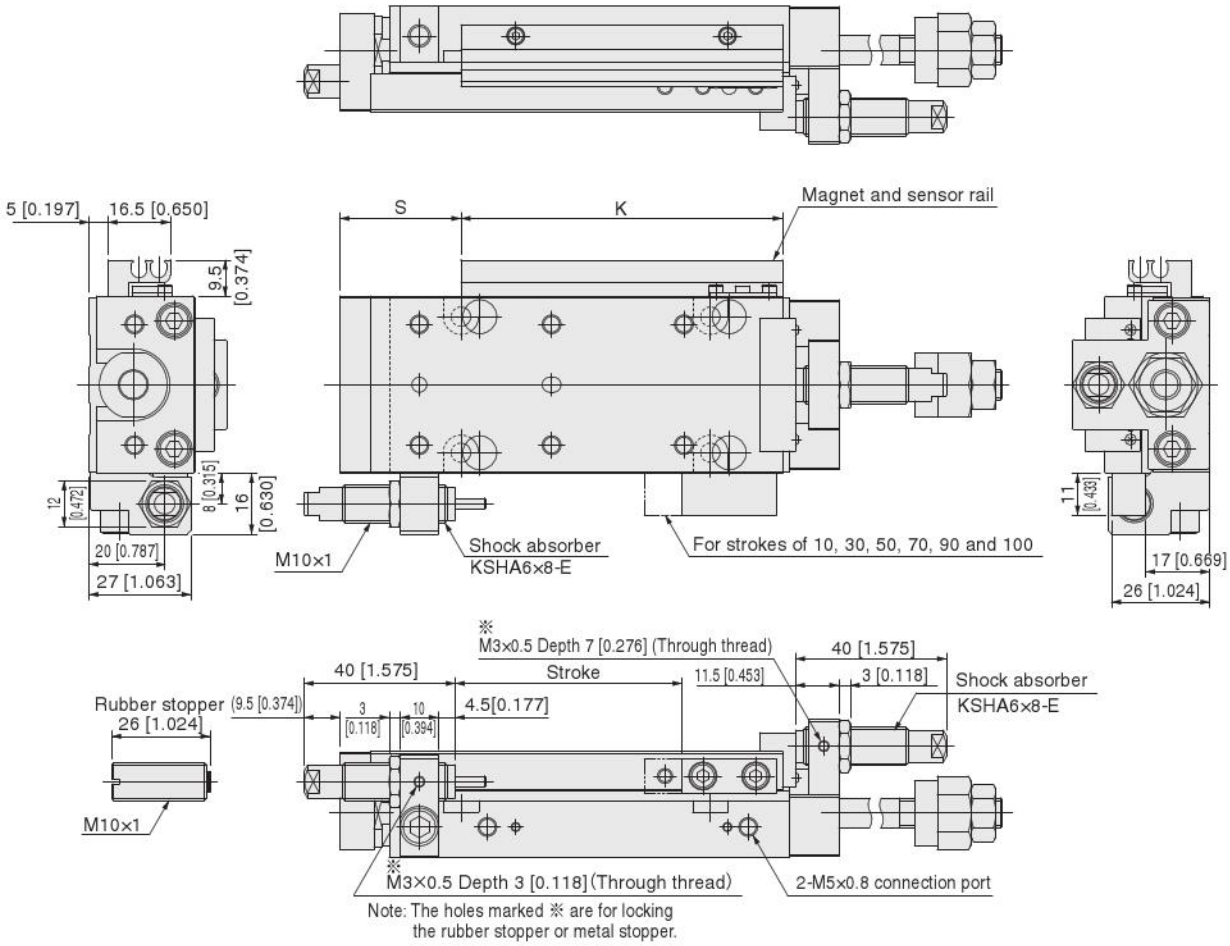

Piping direction: -L

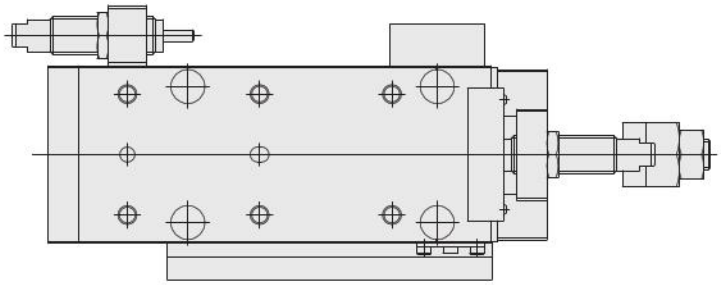

Locating pin: -P (P-MGA2)

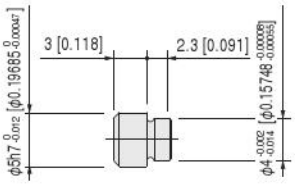

● Cylinder with buffer

MGAG20

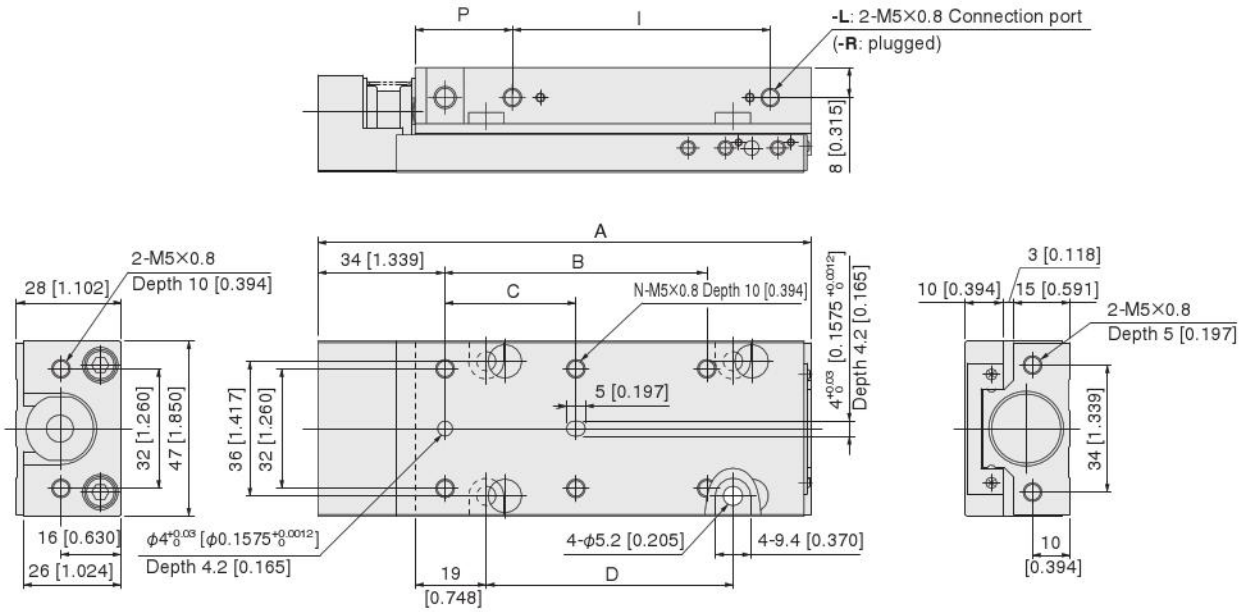

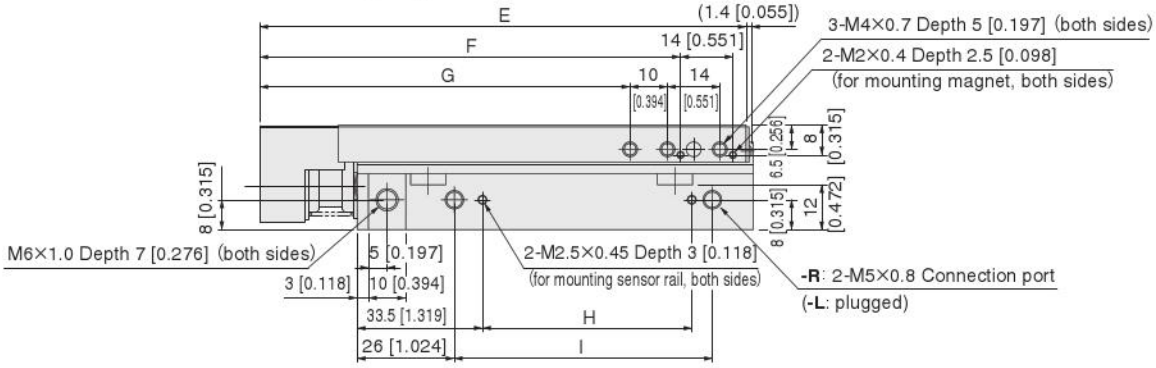

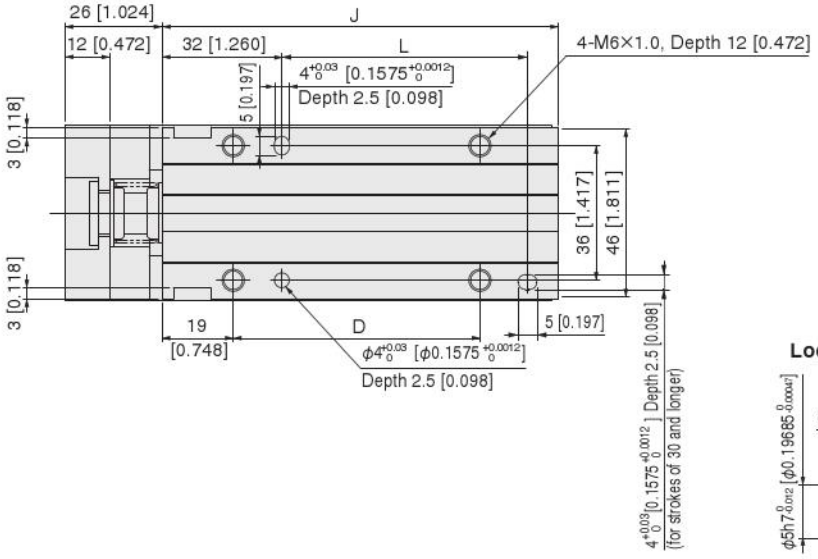

Locating pin: -P (P-MGA2)

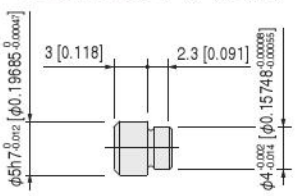

Stroke	A	B	C	D	E	F	G	H	I	J	K	L	M	N	P	Q	R	S
10, 15, 20	92 [3.622]	—	30 [1.181]	26 [1.024]	90 [3.543]	72.5 [2.854]	59 [2.323]	16 [0.630]	29 [1.142]	66 [2.598]	45 [1.772]	—	33.5 [1.319]	4	26 [1.024]	14 [0.551]	10 [0.394]	45 [1.772]
30, 40	112 [4.409]	—	50 [1.969]	46 [1.811]	110 [4.331]	92.5 [3.642]	79 [3.110]	36 [1.417]	49 [1.929]	86 [3.386]	65 [2.559]	45 [1.772]	33.5 [1.319]	4	26 [1.024]	14 [0.551]	10 [0.394]	45 [1.772]
50, 60	132 [5.197]	70 [2.756]	35 [1.378]	66 [2.598]	130 [5.118]	112.5 [4.429]	99 [3.898]	56 [2.205]	69 [2.717]	106 [4.173]	85 [3.346]	65 [2.559]	33.5 [1.319]	6	26 [1.024]	14 [0.551]	10 [0.394]	45 [1.772]
70, 80	152 [5.984]	90 [3.543]	45 [1.772]	86 [3.386]	150 [5.906]	132.5 [5.217]	119 [4.685]	76 [2.992]	89 [3.504]	126 [4.961]	105 [4.134]	85 [3.346]	33.5 [1.319]	6	26 [1.024]	14 [0.551]	10 [0.394]	45 [1.772]
90, 100, 120, 125	217 [8.543]	150 [5.906]	75 [2.953]	151 [5.945]	215 [8.465]	197.5 [7.776]	149 [5.866]	121 [4.764]	134 [5.276]	191 [7.520]	150 [5.906]	150 [5.906]	53.5 [2.106]	6	46 [1.811]	34 [1.339]	25 [0.984]	65 [2.559]

● **Cylinder with buffer, magnet and sensor rail MGAGS20**

● **Cylinder with buffer and shock absorber MGAG□20-SSR**

Piping direction: -R

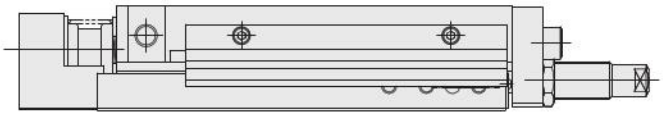

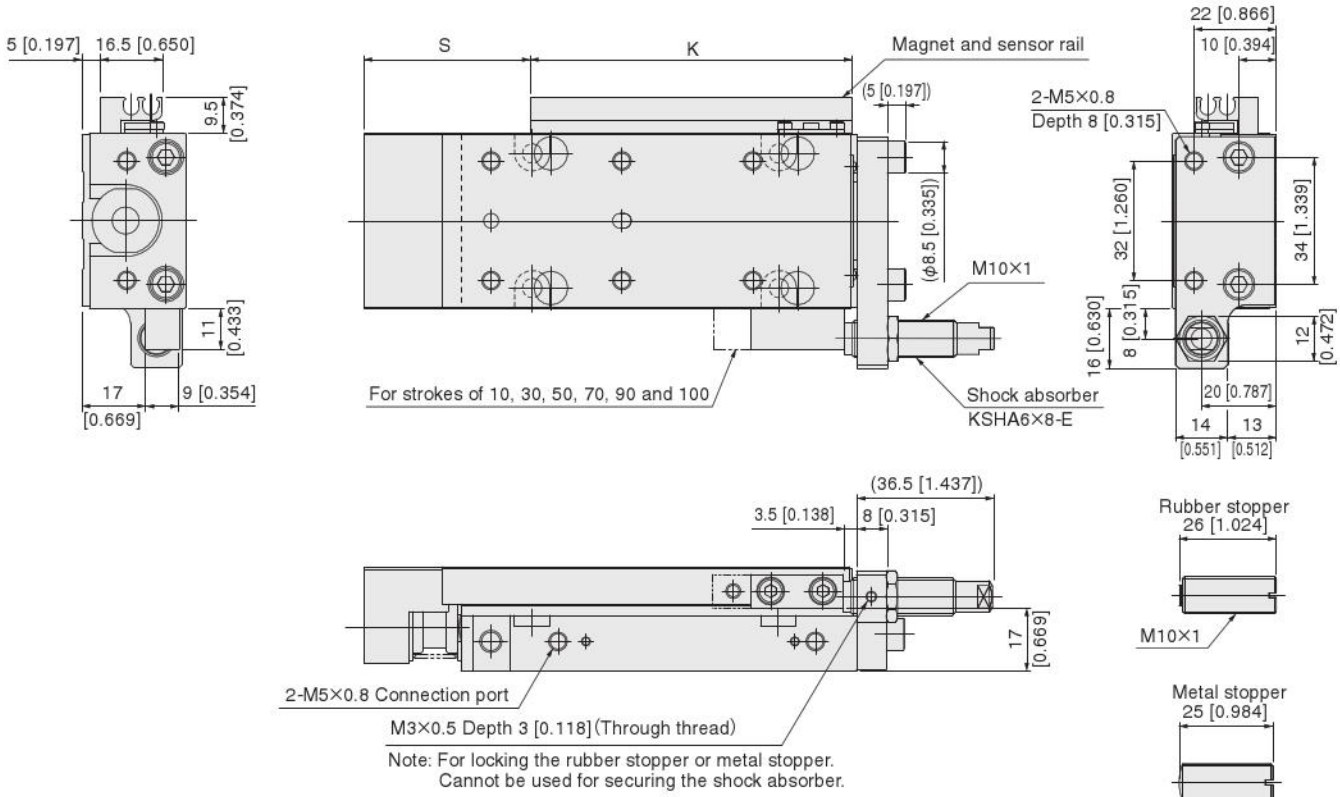

Piping direction: -L

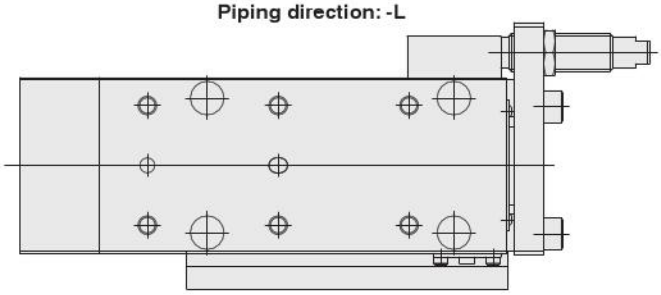

Locating pin: -P (P-MGA2)

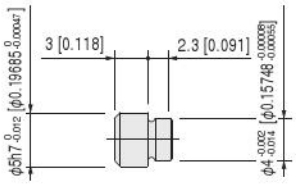

Remark: The buffer stroke of φ 20 [0.787] cylinder with buffer is a maximum of 6 mm [0.236 in.].

● Extended side stroke adjusting cylinder with buffer

MGAPG20

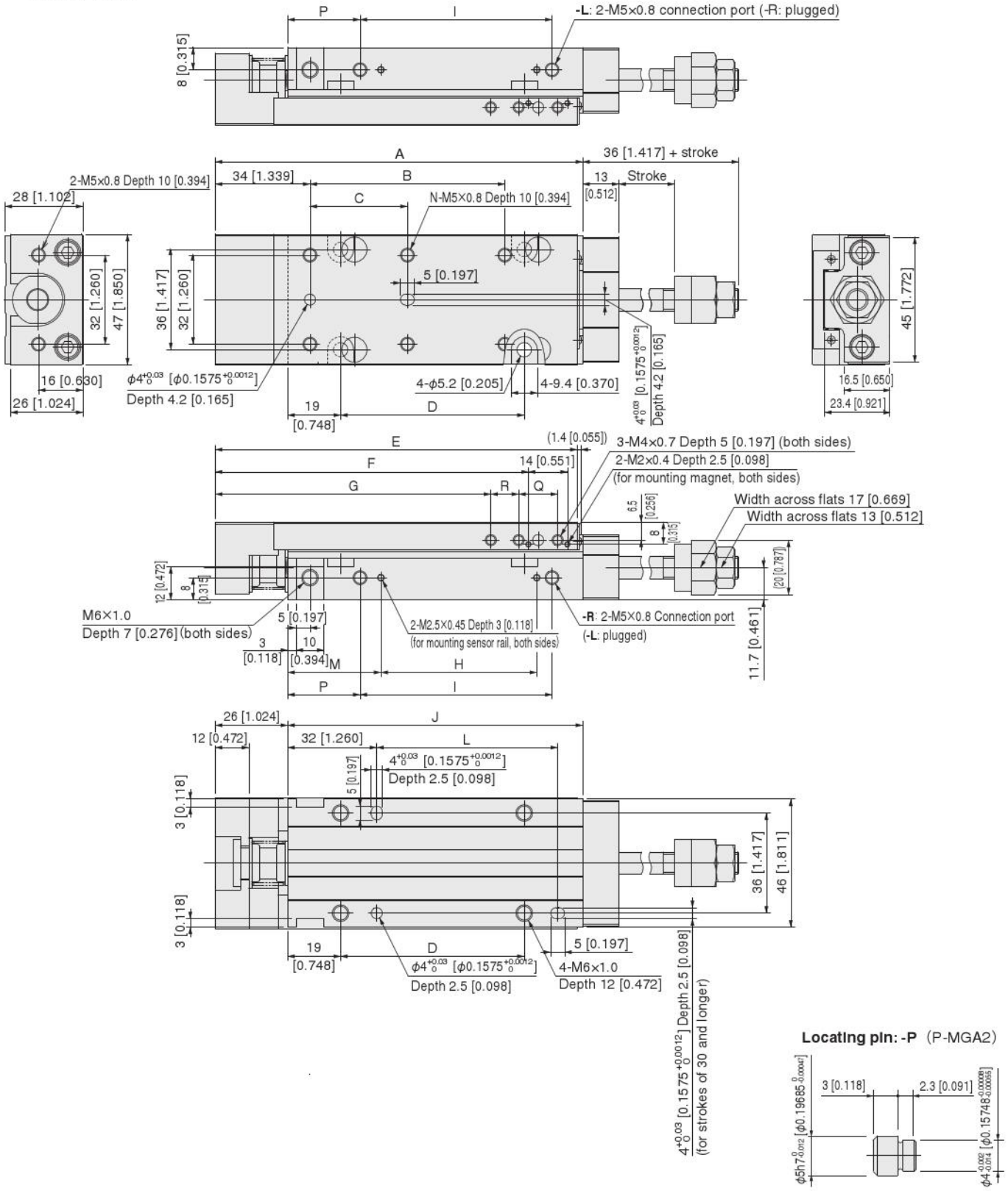

Stroke	A	B	C	D	E	F	G	H	I	J	K	L	M	N	P	Q	R	S
10, 15, 20	92 [3.622]	—	30 [1.181]	26 [1.024]	90 [3.543]	72.5 [2.854]	59 [2.323]	16 [0.630]	29 [1.142]	66 [2.598]	45 [1.772]	—	33.5 [1.319]	4	26 [1.024]	14 [0.551]	10 [0.394]	45 [1.772]
30, 40	112 [4.409]	—	50 [1.969]	46 [1.811]	110 [4.331]	92.5 [3.642]	79 [3.110]	36 [1.417]	49 [1.929]	86 [3.386]	65 [2.559]	45 [1.772]	33.5 [1.319]	4	26 [1.024]	14 [0.551]	10 [0.394]	45 [1.772]
50, 60	132 [5.197]	70 [2.756]	35 [1.378]	66 [2.598]	130 [5.118]	112.5 [4.429]	99 [3.898]	56 [2.205]	69 [2.717]	106 [4.173]	85 [3.346]	65 [2.559]	33.5 [1.319]	6	26 [1.024]	14 [0.551]	10 [0.394]	45 [1.772]
70, 80	152 [5.984]	90 [3.543]	45 [1.772]	86 [3.386]	150 [5.906]	132.5 [5.217]	119 [4.685]	76 [2.992]	89 [3.504]	126 [4.961]	105 [4.134]	85 [3.346]	33.5 [1.319]	6	26 [1.024]	14 [0.551]	10 [0.394]	45 [1.772]
90, 100, 120, 125	217 [8.543]	150 [5.906]	75 [2.953]	151 [5.945]	215 [8.465]	197.5 [7.776]	149 [5.866]	121 [4.764]	134 [5.276]	191 [7.520]	150 [5.906]	150 [5.906]	53.5 [2.106]	6	46 [1.811]	34 [1.339]	25 [0.984]	65 [2.559]

Remark: The buffer stroke of ϕ 20 [0.787] cylinder with buffer is a maximum of 6 mm [0.236 in.].

● **Extended side stroke adjusting cylinder with buffer, magnet and sensor rail**

MGAPGS20

Piping direction: -R

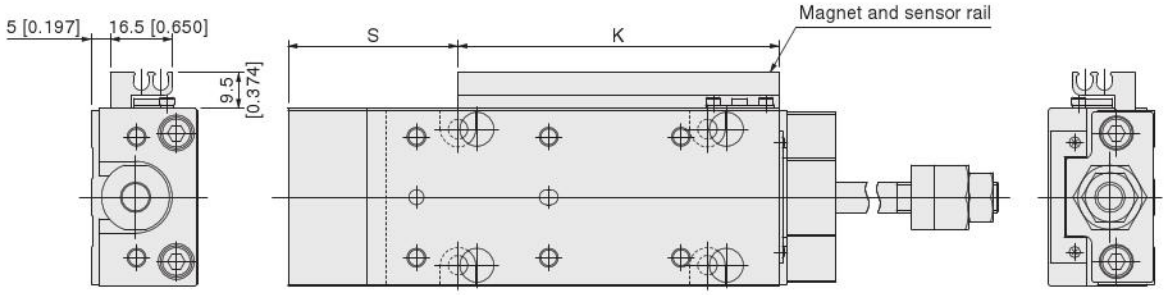

Piping direction: -L

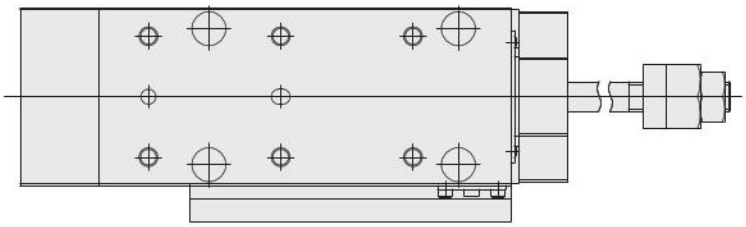

Locating pin: -P (P-MGA2)

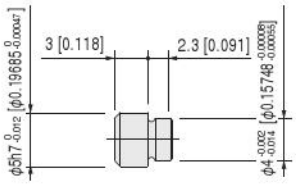

Remark: The buffer stroke of ϕ 20 [0.787] cylinder with buffer is a maximum of 6 mm [0.236 in.].

● Extended/retracted-side stroke adjusting cylinder with buffer

MGAEG20

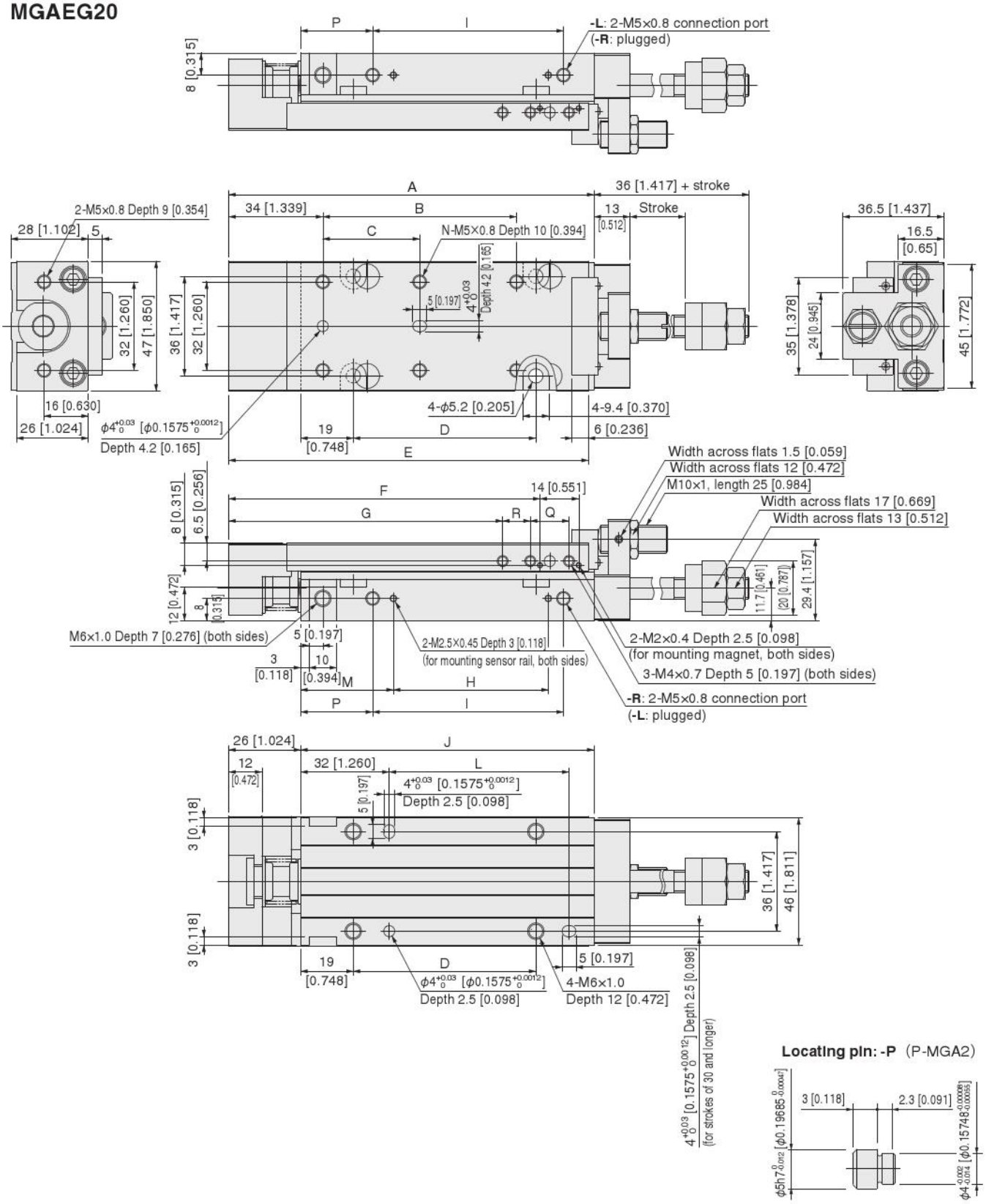

Stroke	A	B	C	D	E	F	G	H	I	J	K	L	M	N	P	Q	R	S
10, 15, 20	92 [3.622]	—	30 [1.181]	26 [1.024]	90 [3.543]	72.5 [2.854]	59 [2.323]	16 [0.630]	29 [1.142]	66 [2.598]	45 [1.772]	—	33.5 [1.319]	4	26 [1.024]	14 [0.551]	10 [0.394]	45 [1.772]
30, 40	112 [4.409]	—	50 [1.969]	46 [1.811]	110 [4.331]	92.5 [3.642]	79 [3.110]	36 [1.417]	49 [1.929]	86 [3.386]	65 [2.559]	45 [1.772]	33.5 [1.319]	4	26 [1.024]	14 [0.551]	10 [0.394]	45 [1.772]
50, 60	132 [5.197]	70 [2.756]	35 [1.378]	66 [2.598]	130 [5.118]	112.5 [4.429]	99 [3.898]	56 [2.205]	69 [2.717]	106 [4.173]	85 [3.346]	65 [2.559]	33.5 [1.319]	6	26 [1.024]	14 [0.551]	10 [0.394]	45 [1.772]
70, 80	152 [5.984]	90 [3.543]	45 [1.772]	86 [3.386]	150 [5.906]	132.5 [5.217]	119 [4.685]	76 [2.992]	89 [3.504]	126 [4.961]	105 [4.134]	85 [3.346]	33.5 [1.319]	6	26 [1.024]	14 [0.551]	10 [0.394]	45 [1.772]
90, 100, 120, 125	217 [8.543]	150 [5.906]	75 [2.953]	151 [5.945]	215 [8.465]	197.5 [7.776]	149 [5.866]	121 [4.764]	134 [5.276]	191 [7.520]	150 [5.906]	150 [5.906]	53.5 [2.106]	6	46 [1.811]	34 [1.339]	25 [0.984]	65 [2.559]

Remark: The buffer stroke of ϕ 20 [0.787] cylinder with buffer is a maximum of 6 mm [0.236 in.].

● **Extended/retracted-side stroke adjusting cylinder with buffer, magnet and sensor rail MGAEGS20**

● **Extended/retracted-side stroke adjusting cylinder with buffer and shock absorber MGAEG□20-SSR**

Piping direction: -R

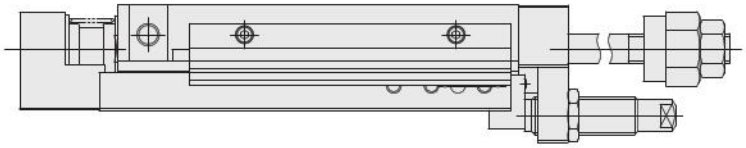

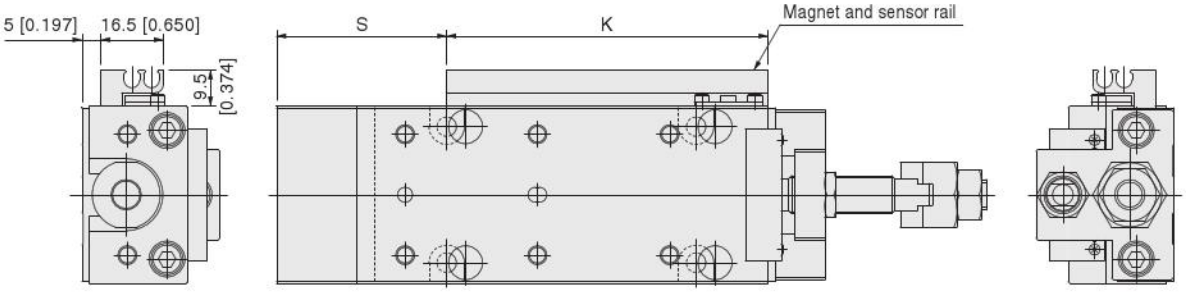

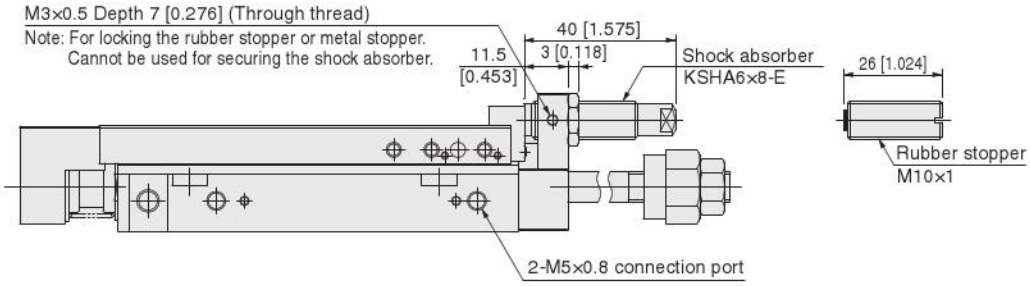

Piping direction: -L

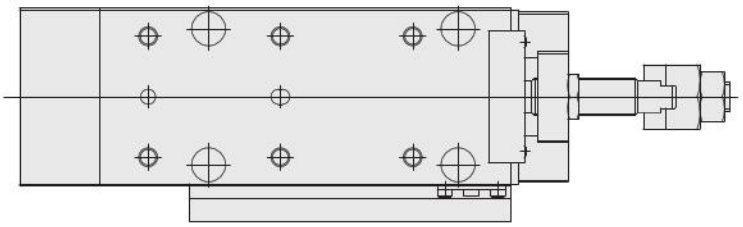

Locating pin: -P (P-MGA2)

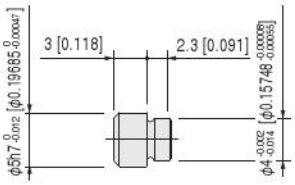

Remark: The buffer stroke of φ 20 [0.787] cylinder with buffer is a maximum of 6 mm [0.236 in.].

● Cylinder with end keep

MGAK20

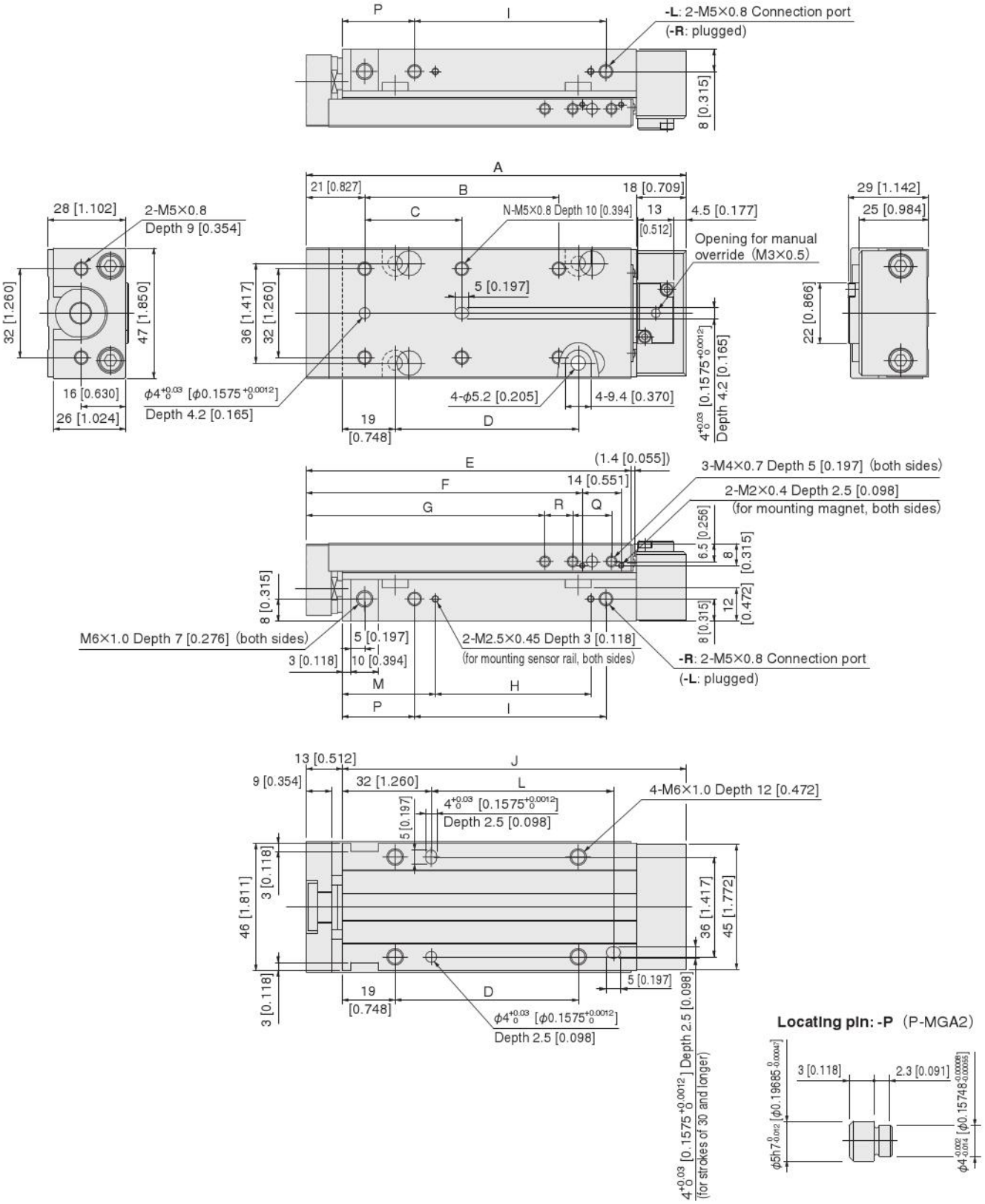

Stroke	A	B	C	D	E	F	G	H	I	J	K	L	M	N	P	Q	R	S
10, 15, 20	97 [3.819]	—	30 [1.181]	26 [1.024]	77 [3.031]	59.5 [2.343]	46 [1.811]	16 [0.630]	29 [1.142]	84 [3.307]	45 [1.772]	—	33.5 [1.319]	4	26 [1.024]	14 [0.551]	10 [0.394]	32 [1.260]
30, 40	117 [4.606]	—	50 [1.969]	46 [1.811]	97 [3.819]	79.5 [3.130]	66 [2.598]	36 [1.417]	49 [1.929]	104 [4.094]	65 [2.559]	45 [1.772]	33.5 [1.319]	4	26 [1.024]	14 [0.551]	10 [0.394]	32 [1.260]
50, 60	137 [5.394]	70 [2.756]	35 [1.378]	66 [2.598]	117 [4.606]	99.5 [3.917]	86 [3.386]	56 [2.205]	69 [2.717]	124 [4.882]	85 [3.346]	65 [2.559]	33.5 [1.319]	6	26 [1.024]	14 [0.551]	10 [0.394]	32 [1.260]
70, 80	157 [6.181]	90 [3.543]	45 [1.772]	86 [3.386]	137 [5.394]	119.5 [4.705]	106 [4.173]	76 [2.992]	89 [3.504]	144 [5.669]	105 [4.134]	85 [3.346]	33.5 [1.319]	6	26 [1.024]	14 [0.551]	10 [0.394]	32 [1.260]
90, 100, 120, 125	222 [8.740]	150 [5.906]	75 [2.953]	151 [5.945]	202 [7.953]	184.5 [7.264]	136 [5.354]	121 [4.764]	134 [5.276]	209 [8.228]	150 [5.906]	150 [5.906]	53.5 [2.106]	6	46 [1.811]	34 [1.339]	25 [0.984]	52 [2.047]

● **Cylinder with end keep and magnet sensor rail MGAKS20**

● **Cylinder with end keep and shock absorber MGAK20-SSF**

Piping direction: -R

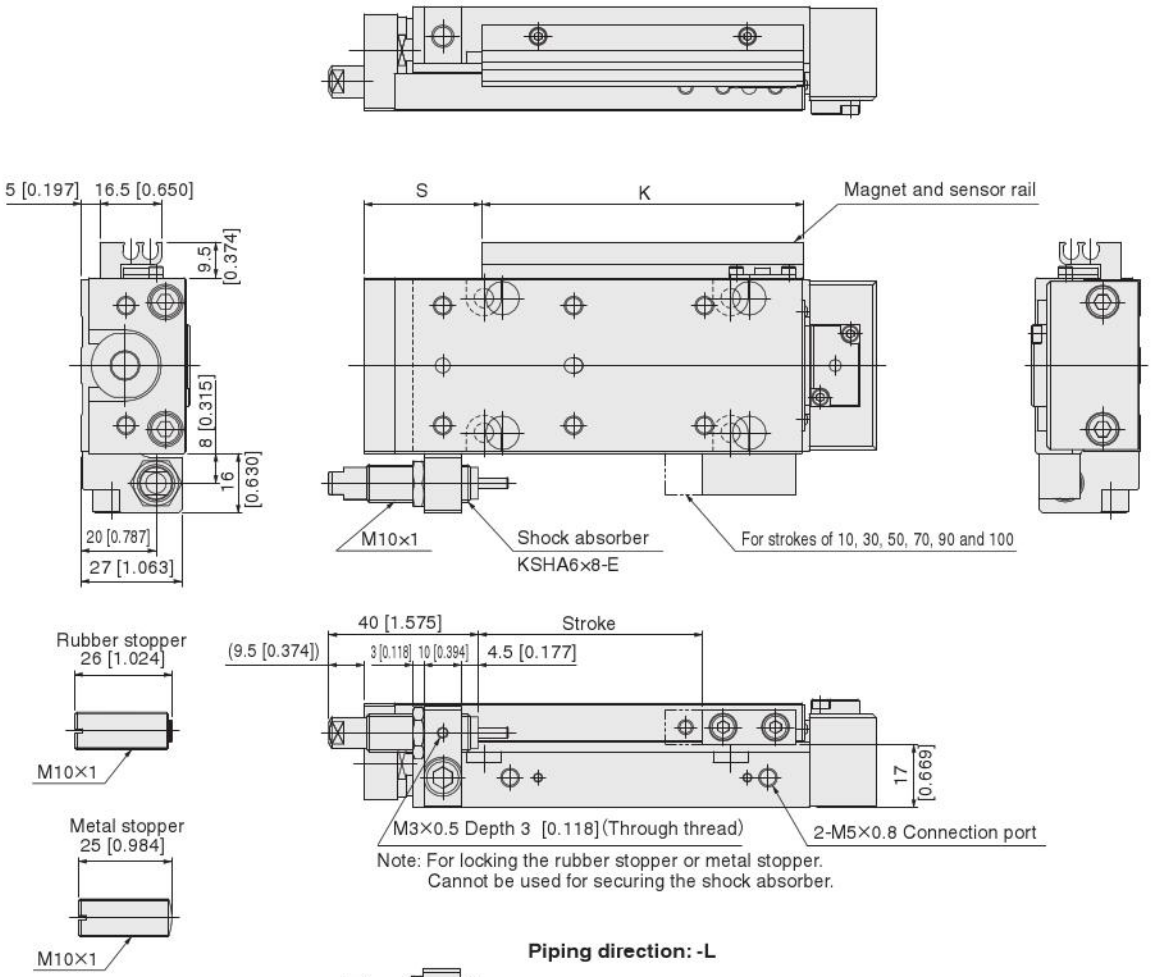

Piping direction: -L

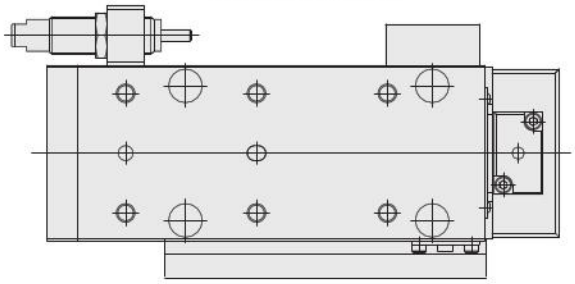

Locating pin: -P (P-MGA2)

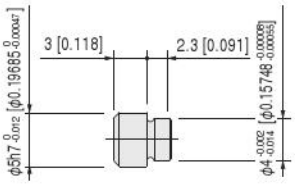

● Cylinder with buffer end keep

MGAGK20

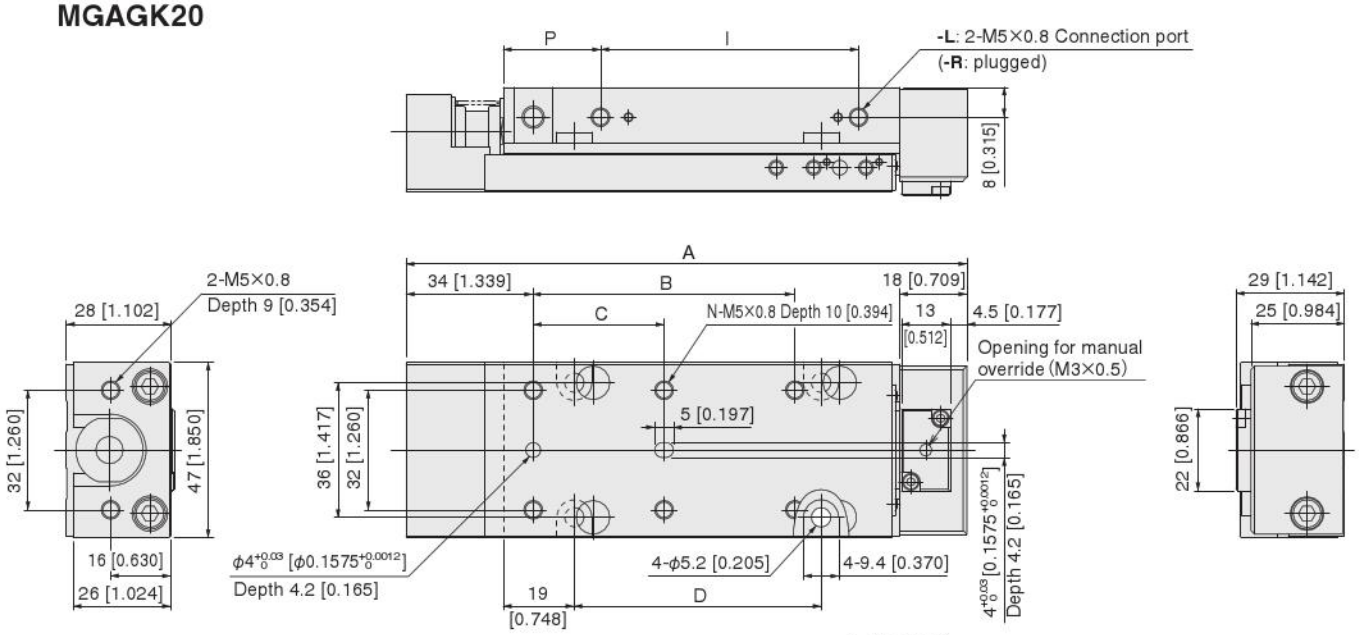

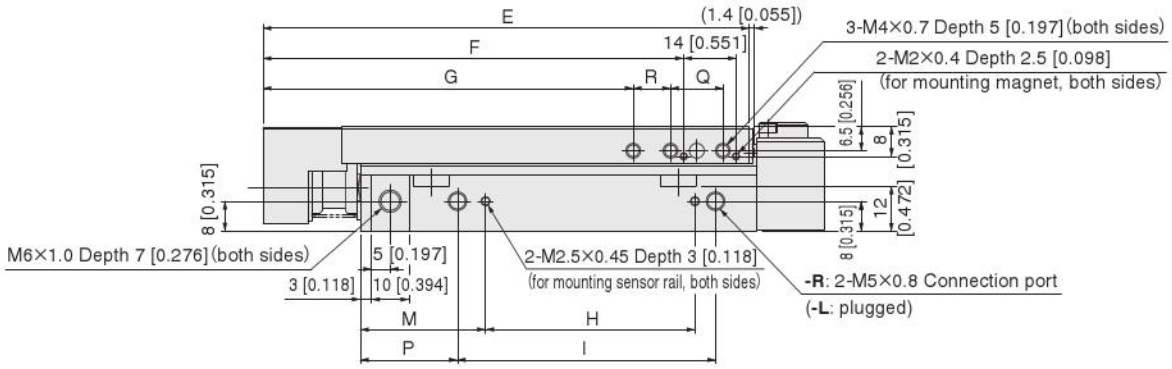

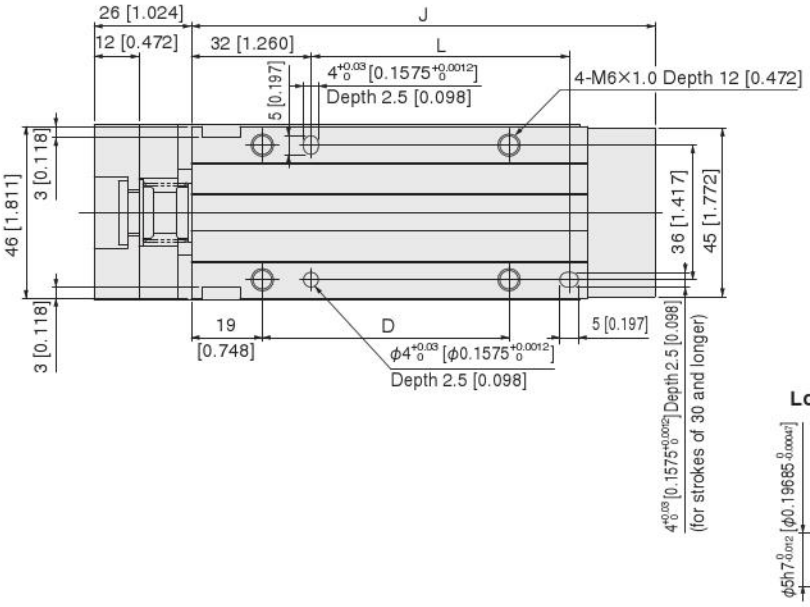

Locating pin: -P (P-MGA2)

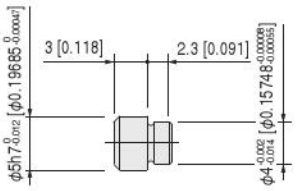

Stroke	A	B	C	D	E	F	G	H	I	J	K	L	M	N	P	Q	R	S
10, 15, 20	110 [4.331]	—	30 [1.181]	26 [1.024]	90 [3.543]	72.5 [2.854]	59 [2.323]	16 [0.630]	29 [1.142]	84 [3.307]	45 [1.772]	—	33.5 [1.319]	4	26 [1.024]	14 [0.551]	10 [0.394]	45 [1.772]
30, 40	130 [5.118]	—	50 [1.969]	46 [1.811]	110 [4.331]	92.5 [3.642]	79 [3.110]	36 [1.417]	49 [1.929]	104 [4.094]	65 [2.559]	45 [1.772]	33.5 [1.319]	4	26 [1.024]	14 [0.551]	10 [0.394]	45 [1.772]
50, 60	150 [5.906]	70 [2.756]	35 [1.378]	66 [2.598]	130 [5.118]	112.5 [4.429]	99 [3.898]	56 [2.205]	69 [2.717]	124 [4.882]	85 [3.346]	65 [2.559]	33.5 [1.319]	6	26 [1.024]	14 [0.551]	10 [0.394]	45 [1.772]
70, 80	170 [6.693]	90 [3.543]	45 [1.772]	86 [3.386]	150 [5.906]	132.5 [5.217]	119 [4.685]	76 [2.992]	89 [3.504]	144 [5.669]	105 [4.134]	85 [3.346]	33.5 [1.319]	6	26 [1.024]	14 [0.551]	10 [0.394]	45 [1.772]
90, 100, 120, 125	235 [9.252]	150 [5.906]	75 [2.953]	151 [5.945]	215 [8.465]	197.5 [7.776]	149 [5.866]	121 [4.764]	134 [5.276]	209 [8.228]	150 [5.906]	150 [5.906]	53.5 [2.106]	6	46 [1.811]	34 [1.339]	25 [0.984]	65 [2.559]

Remark: The buffer stroke of ϕ 20 [0.787] cylinder with buffer is a maximum of 6 mm [0.236 in.].

● **Cylinder with buffer end keep, magnet and sensor rail**

MGAGKS20

Piping direction: -R

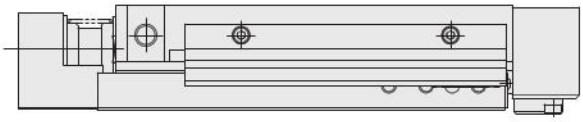

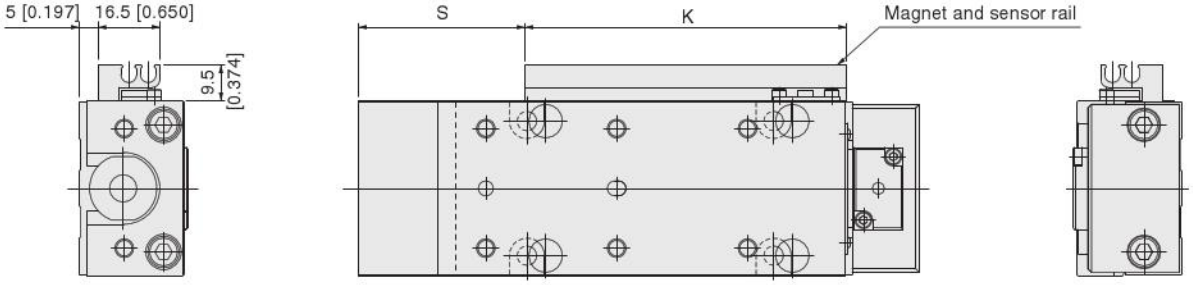

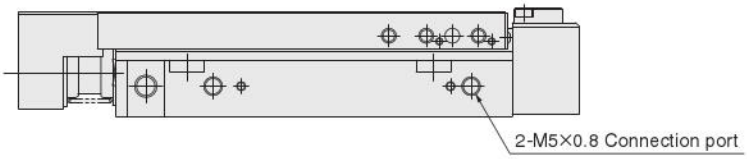

Piping direction: -L

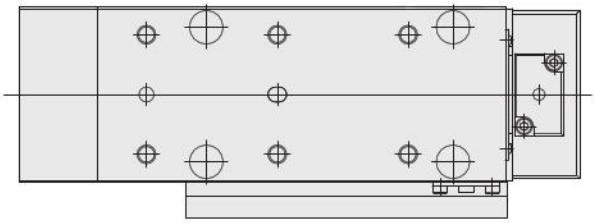

Locating pin: -P (P-MGA2)

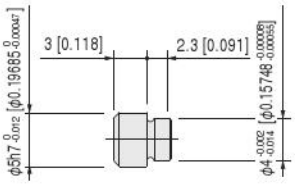

Remark: The buffer stroke of ϕ 20 [0.787] cylinder with buffer is a maximum of 6 mm [0.236 in.].

● Standard cylinder, rear piping specifications

MGAH20

Piping direction: -R

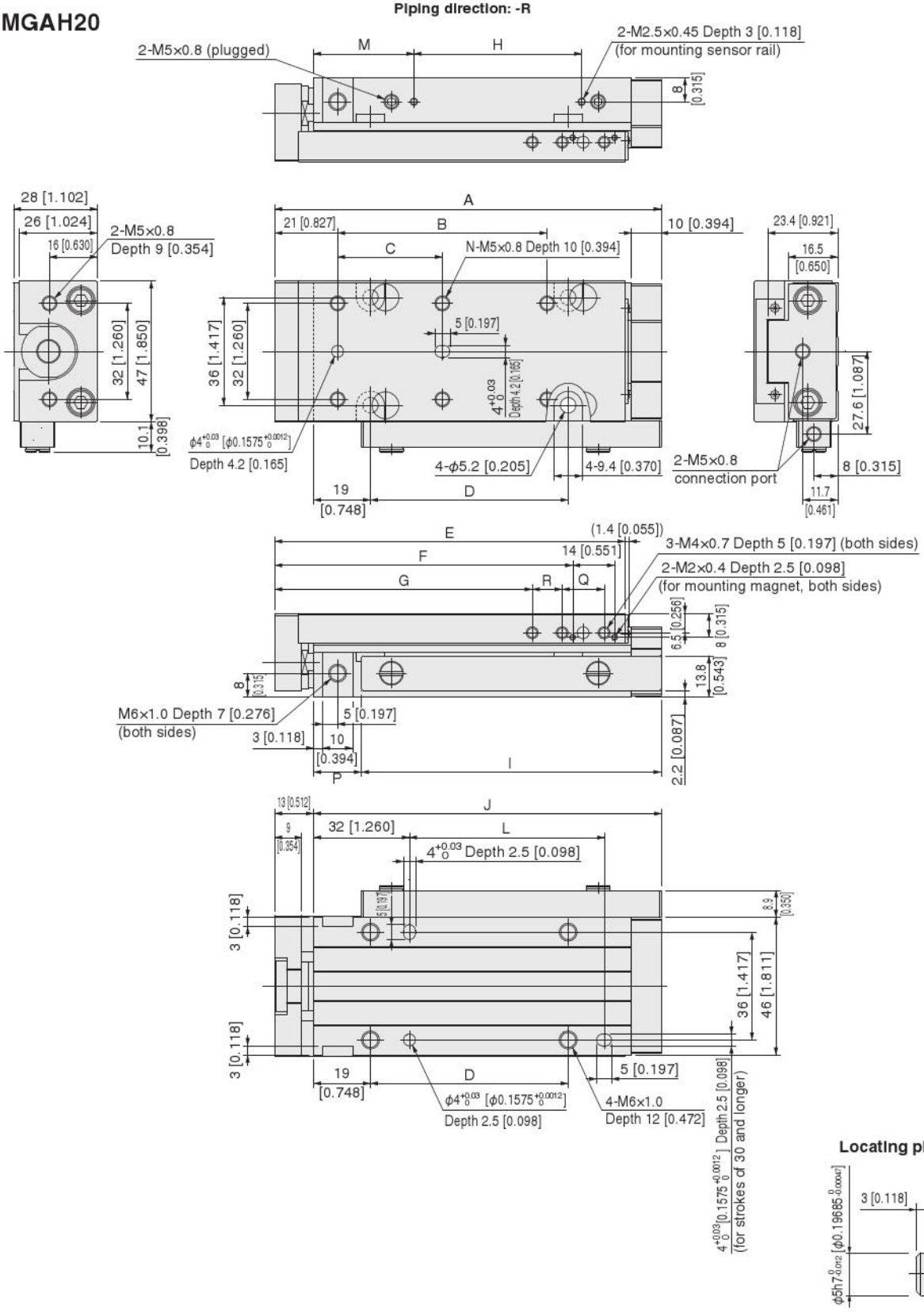

Stroke	A	B	C	D	E	F	G	H	I	J	K	L	M	N	P	Q	R	S
10, 15, 20	89 [3.504]	—	30 [1.181]	26 [1.024]	77 [3.031]	59.5 [2.343]	46 [1.811]	16 [0.630]	60 [2.362]	76 [2.992]	45 [1.772]	—	33.5 [1.319]	4	16 [0.630]	14 [0.551]	10 [0.394]	32 [1.260]
30, 40	109 [4.291]	—	50 [1.969]	46 [1.811]	97 [3.819]	79.5 [3.130]	66 [2.598]	36 [1.417]	80 [3.150]	96 [3.780]	65 [2.559]	45 [1.772]	33.5 [1.319]	4	16 [0.630]	14 [0.551]	10 [0.394]	32 [1.260]
50, 60	129 [5.079]	70 [2.756]	35 [1.378]	66 [2.598]	117 [4.606]	99.5 [3.917]	86 [3.386]	56 [2.205]	100 [3.937]	116 [4.567]	85 [3.346]	65 [2.559]	33.5 [1.319]	6	16 [0.630]	14 [0.551]	10 [0.394]	32 [1.260]
70, 80	149 [5.866]	90 [3.543]	45 [1.772]	86 [3.386]	137 [5.394]	119.5 [4.705]	106 [4.173]	76 [2.992]	120 [4.724]	136 [5.354]	105 [4.134]	85 [3.346]	33.5 [1.319]	6	16 [0.630]	14 [0.551]	10 [0.394]	32 [1.260]
90, 100, 120, 125	214 [8.425]	150 [5.906]	75 [2.953]	151 [5.945]	202 [7.953]	184.5 [7.264]	136 [5.354]	121 [4.764]	165 [6.496]	201 [7.913]	150 [5.906]	150 [5.906]	53.5 [2.106]	6	36 [1.417]	34 [1.339]	25 [0.984]	52 [2.047]

● **Cylinder with magnet and sensor rail MGAHS20**

● **Cylinder with shock absorber MGAH□20-SSF**

Piping direction: -R

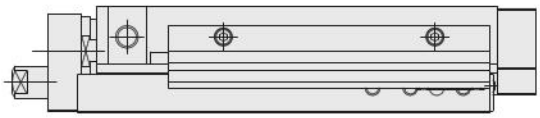

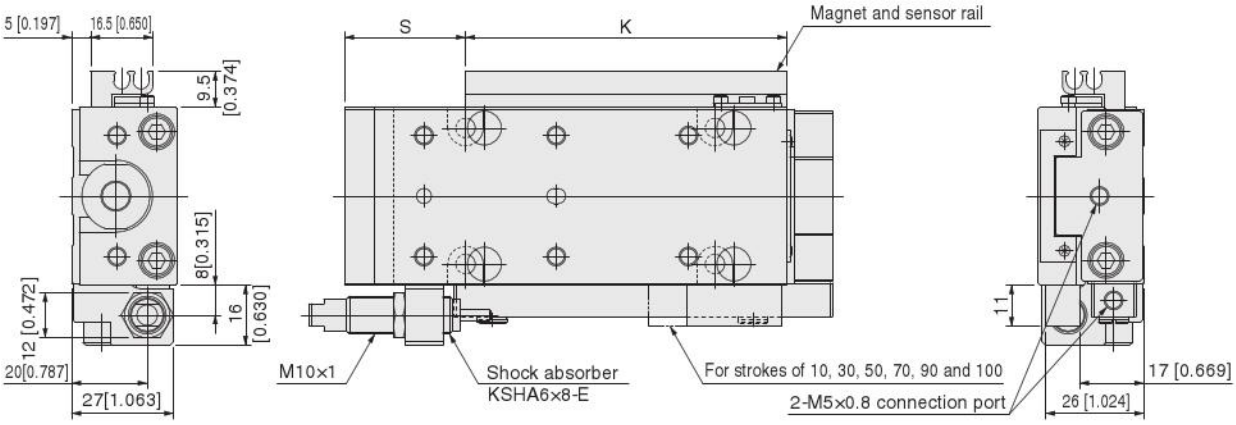

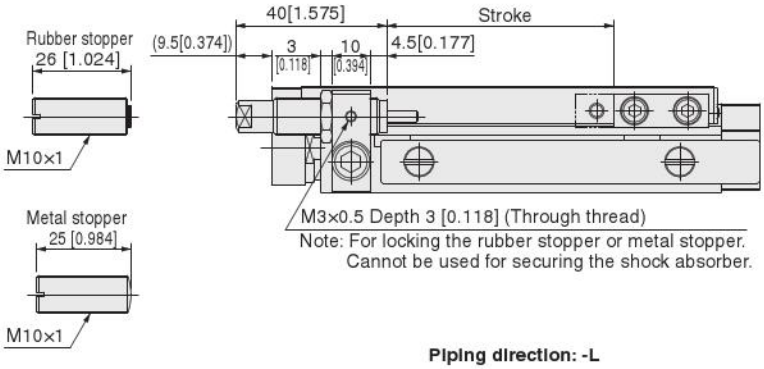

Piping direction: -L

Without options

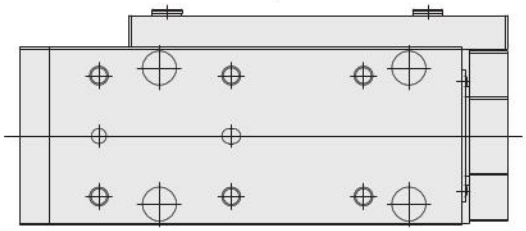

With sensor rail and shock absorber

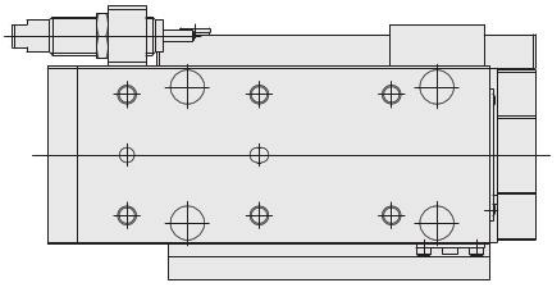

Locating pin: -P (P-MGA2)

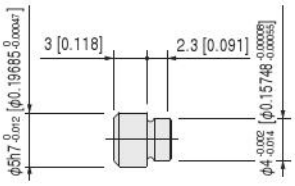

● Cylinder with buffer, rear piping specifications

MGAGH20

Piping direction: -R

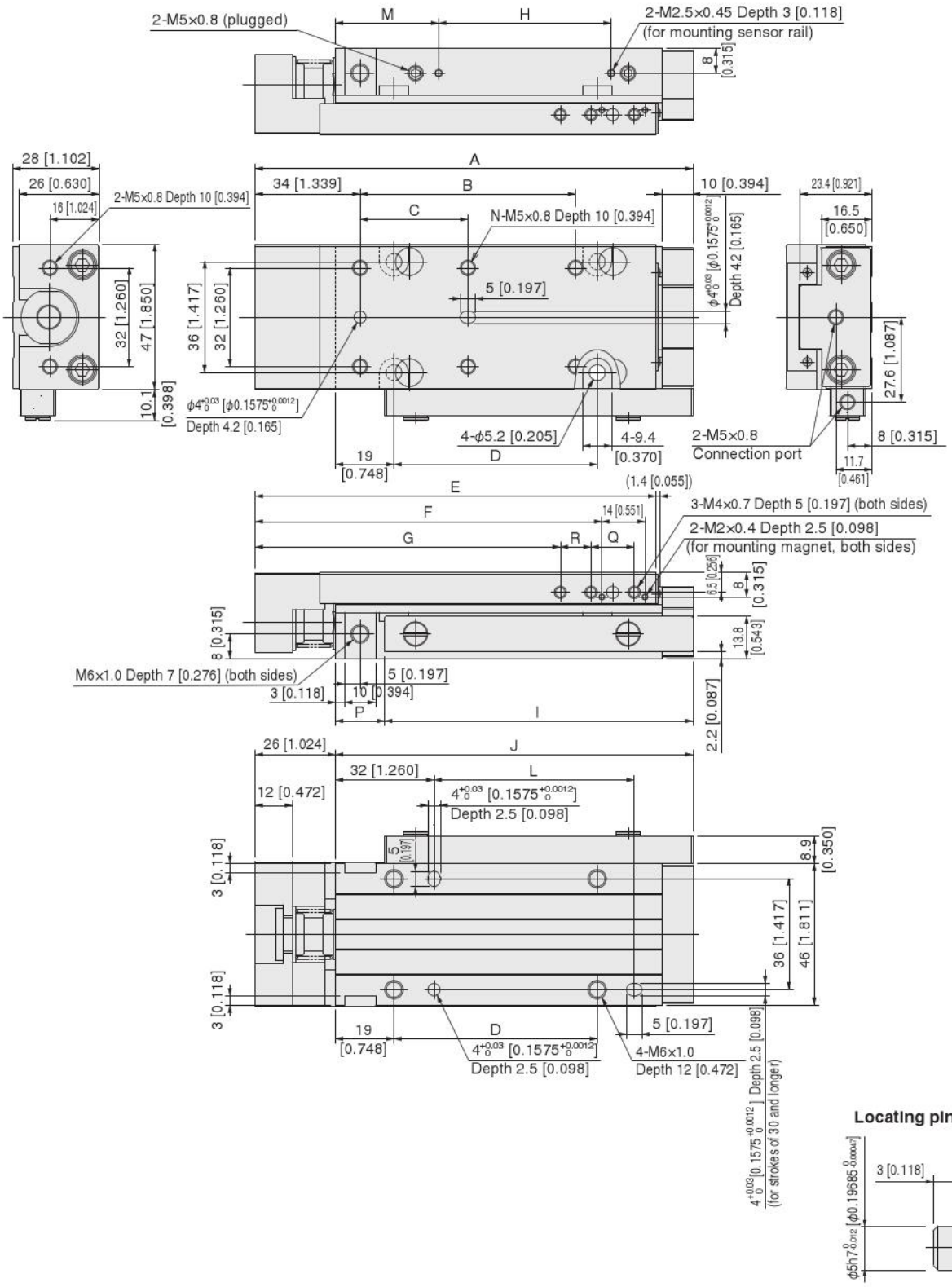

Locating pin: -P (P-MGA2)

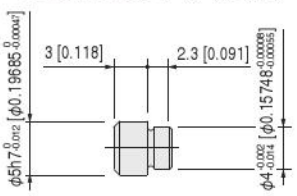

Stroke	A	B	C	D	E	F	G	H	I	J	K	L	M	N	P	Q	R	S
10, 15, 20	102 [4.016]	—	30 [1.181]	26 [1.024]	90 [3.543]	72.5 [2.854]	59 [2.323]	16 [0.630]	60 [2.362]	76 [2.992]	45 [1.772]	—	33.5 [1.319]	4	16 [0.630]	14 [0.551]	10 [0.394]	45 [1.772]
30, 40	122 [4.803]	—	50 [1.969]	46 [1.811]	110 [4.331]	92.5 [3.642]	79 [3.110]	36 [1.417]	80 [3.150]	96 [3.780]	65 [2.559]	45 [1.772]	33.5 [1.319]	4	16 [0.630]	14 [0.551]	10 [0.394]	45 [1.772]
50, 60	142 [5.591]	70 [2.756]	35 [1.378]	66 [2.598]	130 [5.118]	112.5 [4.429]	99 [3.898]	56 [2.205]	100 [3.937]	116 [4.567]	85 [3.346]	65 [2.559]	33.5 [1.319]	6	16 [0.630]	14 [0.551]	10 [0.394]	45 [1.772]
70, 80	162 [6.378]	90 [3.543]	45 [1.772]	86 [3.386]	150 [5.906]	132.5 [5.217]	119 [4.685]	76 [2.992]	120 [4.724]	136 [5.354]	105 [4.134]	85 [3.346]	33.5 [1.319]	6	16 [0.630]	14 [0.551]	10 [0.394]	45 [1.772]
90, 100, 120, 125	227 [8.937]	150 [5.906]	75 [2.953]	151 [5.945]	215 [8.465]	197.5 [7.776]	149 [5.866]	121 [4.764]	165 [6.496]	201 [7.913]	150 [5.906]	150 [5.906]	53.5 [2.106]	6	36 [1.417]	34 [1.339]	25 [0.984]	65 [2.559]

Remark: The buffer stroke of ϕ 20 [0.787] cylinder with buffer is a maximum of 6 mm [0.236 in.].

● **Cylinder with buffer, magnet and sensor rail**

MGAGHS20

Piping direction: -R

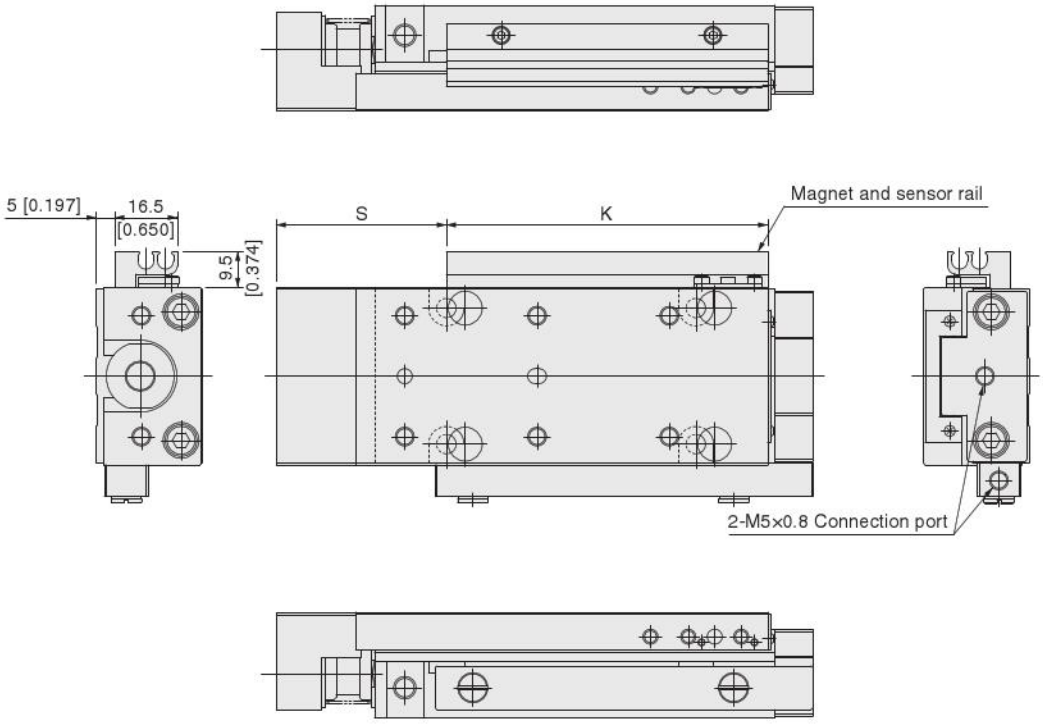

Piping direction: -L

Without options

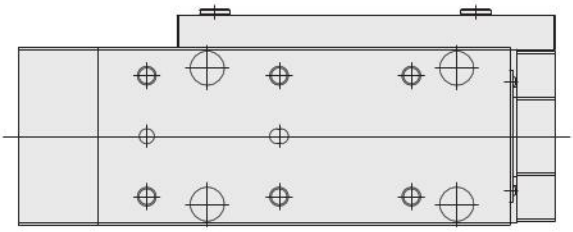

With magnet and sensor rail

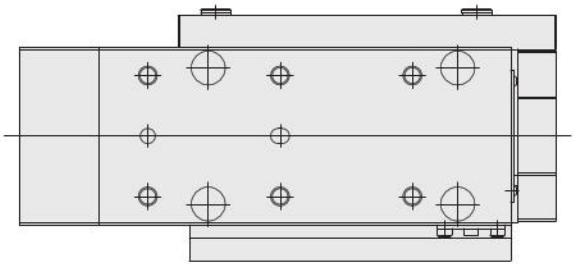

Locating pin: -P (P-MGA2)

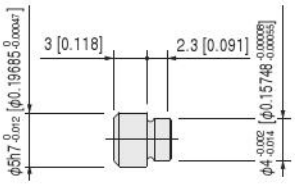

Remark: The buffer stroke of φ 20 [0.787] cylinder with buffer is a maximum of 6 mm [0.236 in.].

● Standard cylinder

MGA25

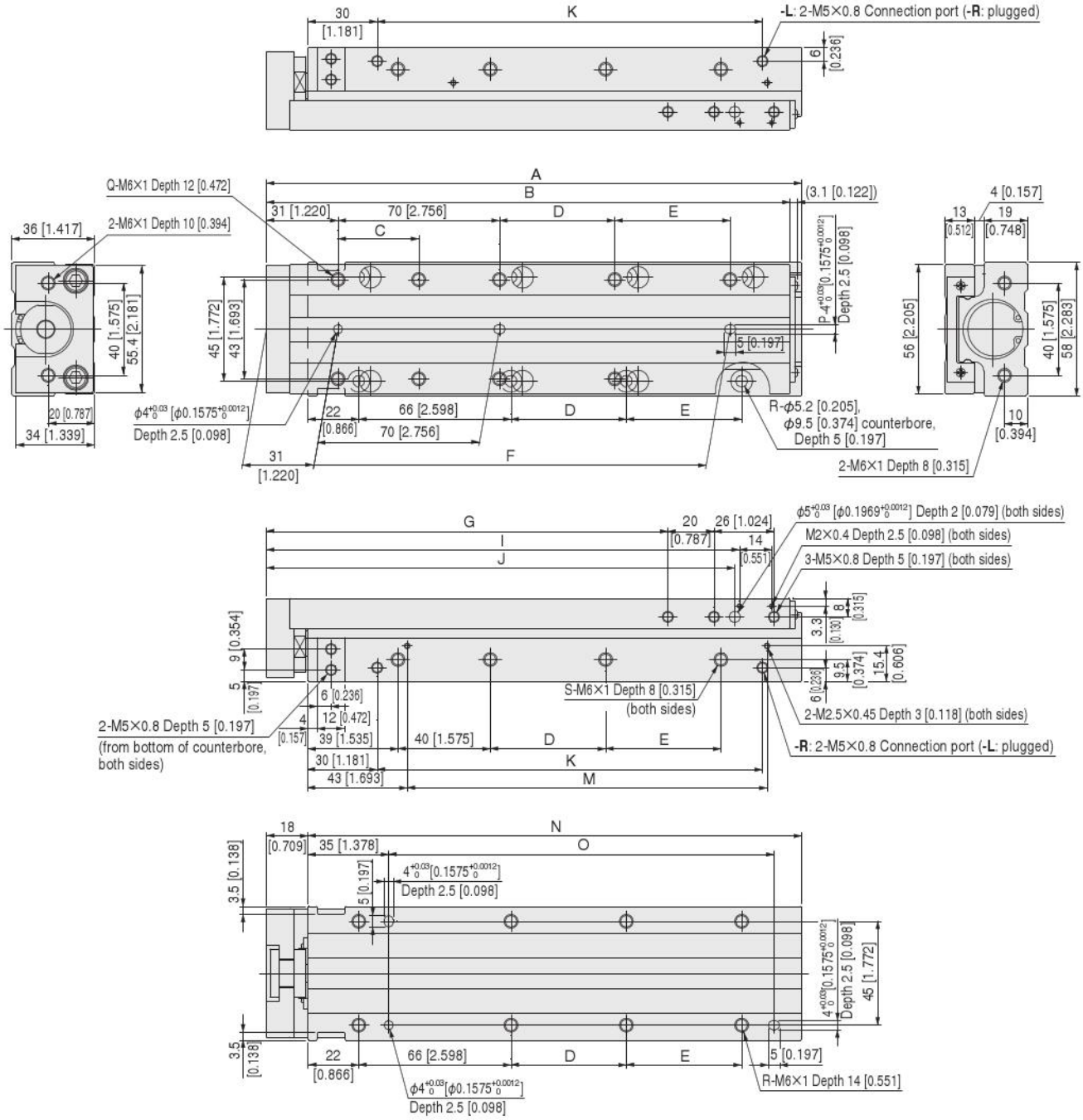

Locating pin: -P (P-MGA2)

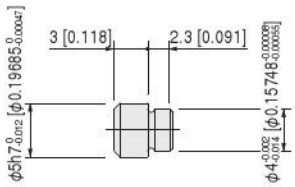

Stroke	A	B	C	D	E	F	G	I	J	K	M	N	O	P	Q	R	S	U
10, 20, 30, 40, 50	132 [5.197]	127 [5.000]	35 [1.378]	—	—	—	74 [2.913]	105 [4.134]	103 [4.055]	67 [2.638]	56 [2.205]	114 [4.488]	67 [2.638]	1	6	4	2	85 [3.346]
60, 80, 100	182 [7.165]	177 [6.969]	—	50 [1.969]	—	120 [4.724]	124 [4.882]	155 [6.102]	153 [6.024]	117 [4.606]	106 [4.173]	164 [6.457]	117 [4.606]	2	6	6	3	135 [5.315]
130, 150	232 [9.134]	227 [8.937]	—	50 [1.969]	50 [1.969]	170 [6.693]	174 [6.850]	205 [8.071]	203 [7.992]	167 [6.575]	156 [6.142]	214 [8.425]	167 [6.575]	2	8	8	4	185 [7.283]

Dimensions of Bore Size ϕ25 [0.984] mm [in.]

- **Cylinder with magnet and sensor rail MGAS25**
- **Cylinder with shock absorber MGA□25-SS□**

Piping direction: -R

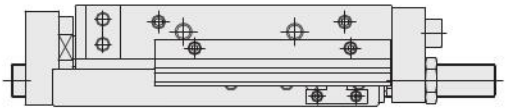

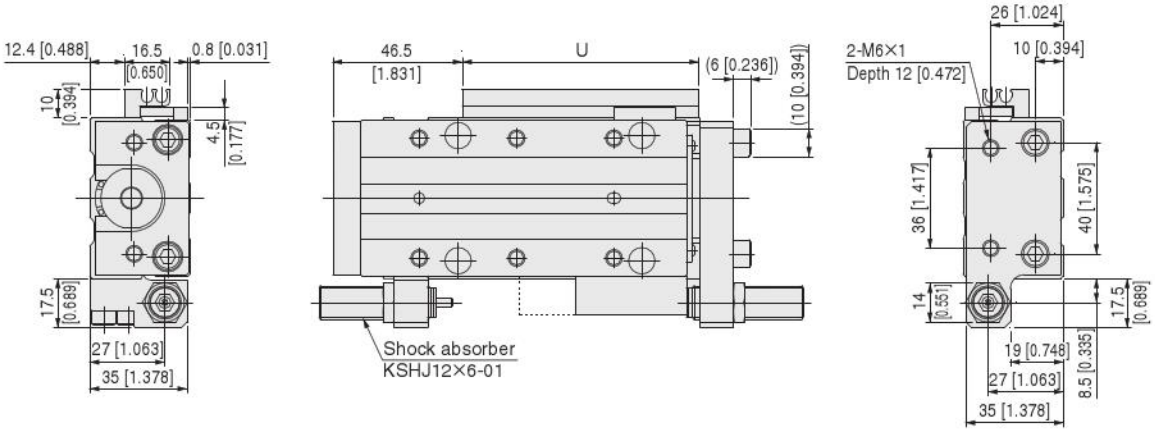

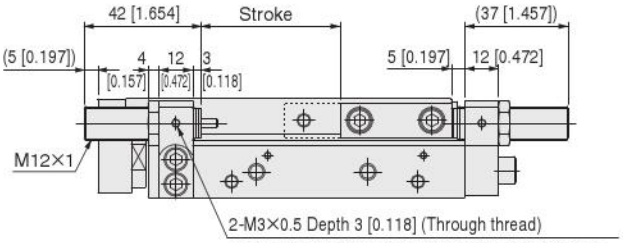

Note: For locking the rubber stopper or metal stopper.
Cannot be used for securing the shock absorber.

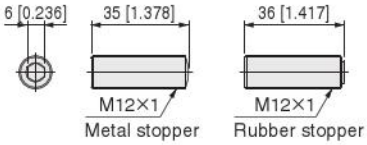

Locating pin: -P (P-MGA2)

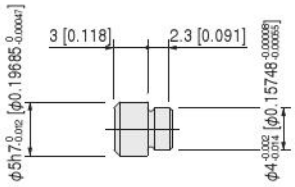

● Standard cylinder

MGA32

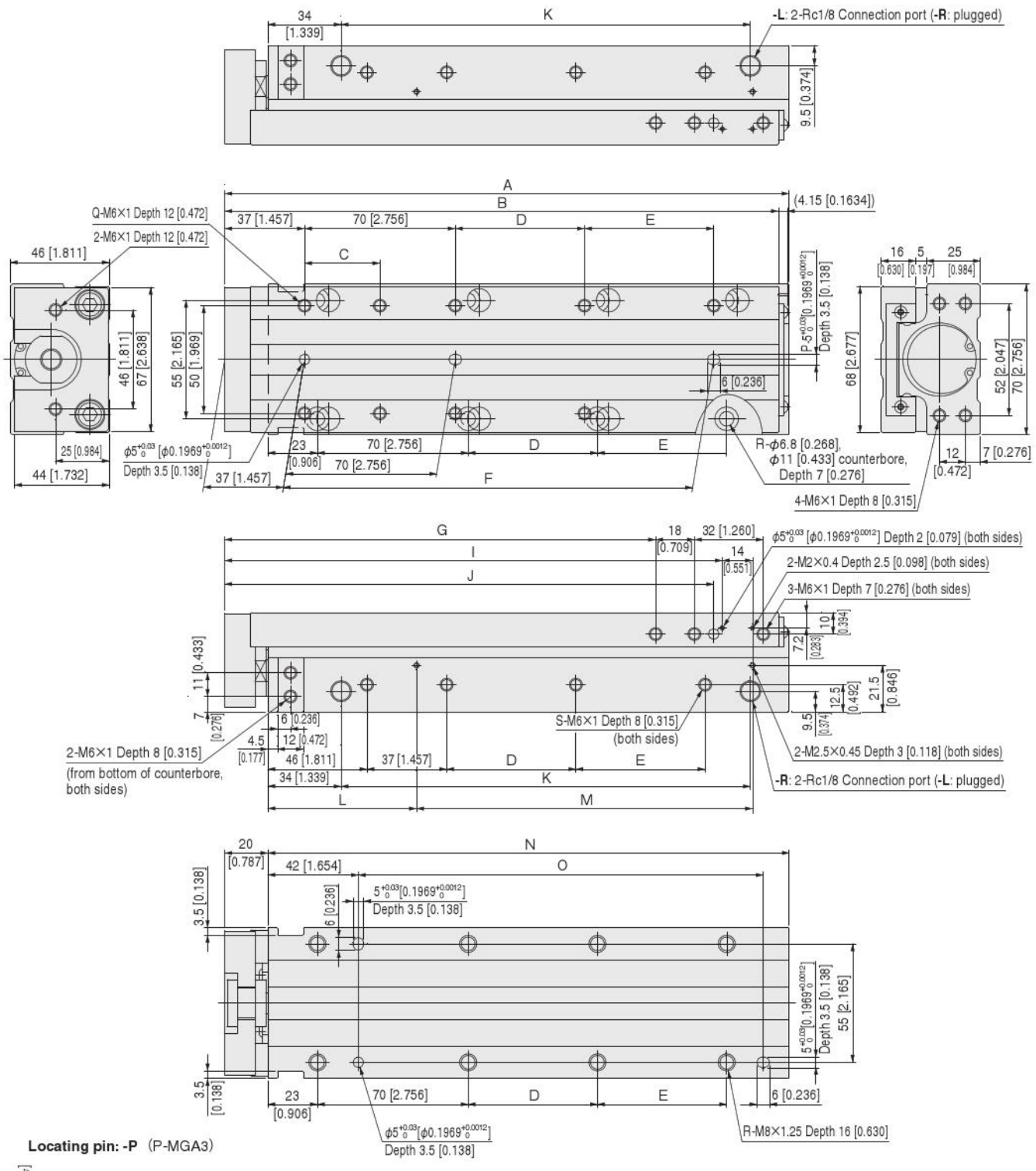

Stroke	A	B	C	D	E	F	G	I	J	K	L	M	N	O	P	Q	R	S	T	U
10, 20, 30, 40, 50	142 [5.591]	137 [5.394]	35 [1.378]	—	—	—	80 [3.150]	111 [4.370]	107 [4.213]	70 [2.756]	49 [1.929]	56 [2.205]	122 [4.803]	68 [2.677]	1	6	4	2	54.5 [2.146]	85 [3.346]
60, 80, 100	192 [7.559]	187 [7.362]	—	50 [1.969]	—	120 [4.724]	130 [5.118]	161 [6.339]	157 [6.181]	120 [4.724]	49 [1.929]	106 [4.173]	172 [6.772]	118 [4.646]	2	6	6	3	54.5 [2.146]	135 [5.315]
130, 150	262 [10.315]	257 [10.118]	—	60 [2.362]	60 [2.362]	190 [7.480]	200 [7.874]	231 [9.094]	227 [8.937]	190 [7.480]	69 [2.717]	156 [6.142]	242 [9.528]	188 [7.402]	2	8	8	4	74.5 [2.933]	185 [7.283]

Dimensions of Bore Size ϕ32 [1.260] mm [in.]

- **Cylinder with magnet and sensor rail MGAS32**
- **Cylinder with shock absorber MGA□32-SS□**

Piping direction: -R

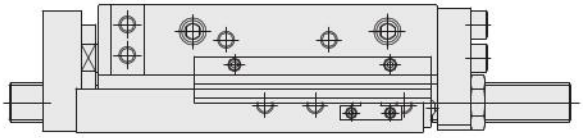

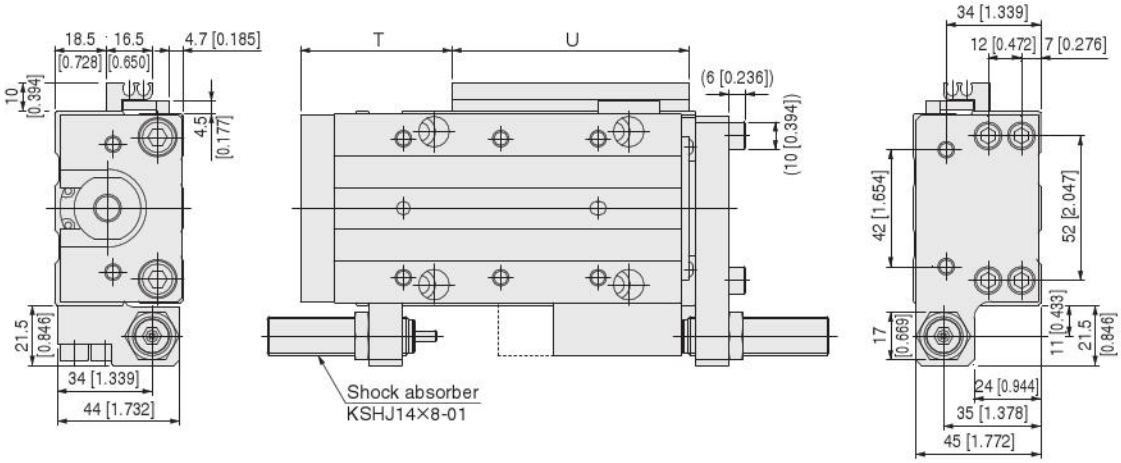

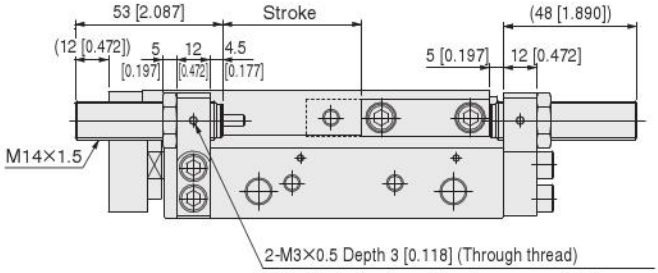

Note: For locking the rubber stopper or metal stopper.
Cannot be used for securing the shock absorber.

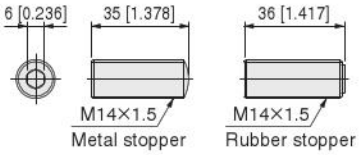

Locating pin: -P (P-MGA3)

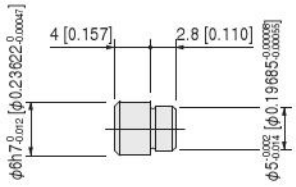

● Sensor rail

S-MGA1

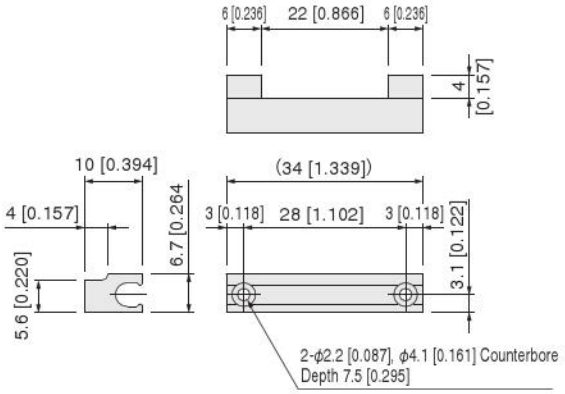

S-MGA2, 3, 4, 5, 10, 12

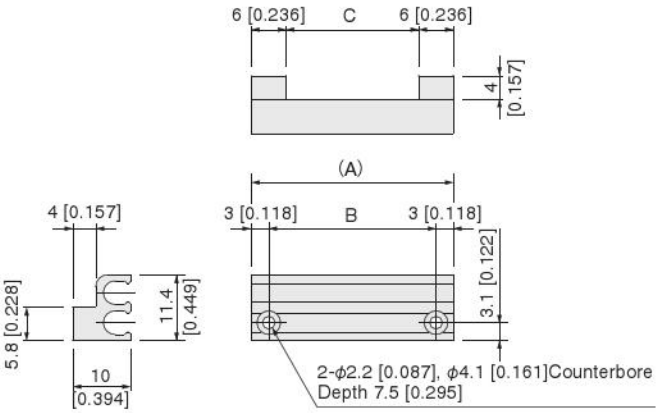

Model	A	B	C
S-MGA2	35 [1.378]	29 [1.142]	23 [0.906]
S-MGA3	40 [1.575]	34 [1.339]	28 [1.102]
S-MGA4	45 [1.772]	39 [1.535]	33 [1.299]
S-MGA5	55 [2.165]	49 [1.929]	43 [1.693]
S-MGA10	85 [3.346]	79 [3.110]	73 [2.874]
S-MGA12	34 [1.339]	28 [1.102]	22 [0.866]

S-MGA6, 7, 8, 9, 11, 13, 14

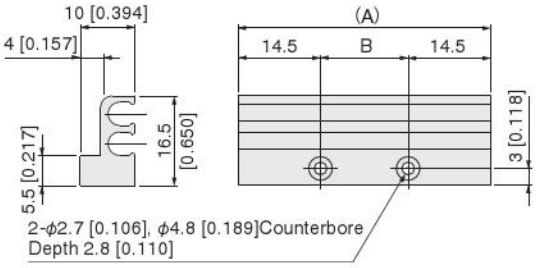

Model	A	B
S-MGA6	46 [1.811]	16 [0.630]
S-MGA7	66 [2.598]	36 [1.417]
S-MGA8	86 [3.386]	56 [2.205]
S-MGA9	106 [4.173]	76 [2.992]
S-MGA12	150 [5.906]	121 [4.764]
S-MGA13	135 [5.315]	106 [4.173]
S-MGA14	185 [7.283]	156 [6.142]

● Rubber stopper

CRK570
CRK571
CRK572

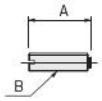

CRK719
CRK720

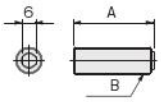

Model	A	B
CRK570	21 [0.827]	M6 × 0.75
CRK571	21 [0.827]	M8 × 0.75
CRK572	26 [1.024]	M10 × 1
CRK719	36 [1.417]	M12 × 1
CRK720	36 [1.417]	M14 × 1.5

● Metal stopper

CRK645
CRK565
CRK566
CRK567

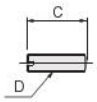

CRK717
CRK718

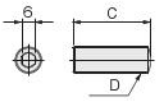

Model	C	D
CRK645	20 [0.787]	M4 × 0.5
CRK565	20 [0.787]	M6 × 0.75
CRK566	20 [0.787]	M8 × 0.75
CRK567	25 [0.984]	M10 × 1
CRK717	35 [1.378]	M12 × 1
CRK718	35 [1.378]	M14 × 1.5

● Magnet

M-MGA1

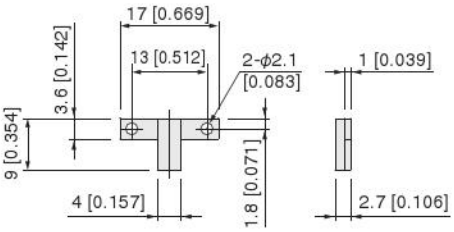

M-MGA2

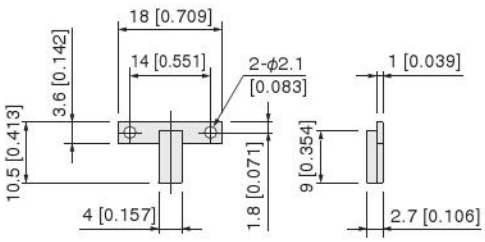

M-MGA3

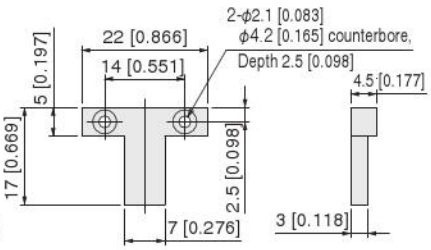

● Locating pin

P-MGA1

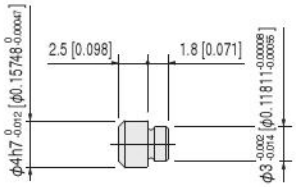

P-MGA2

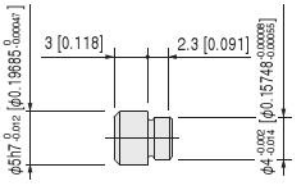

P-MGA3

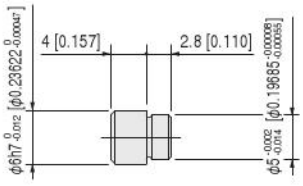

MINI GUIDE SLIDERS

Clean System Cylinder (cleanroom specification)

Symbol

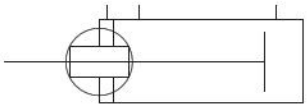

Specifications (The specification for rear piping is the same.)

Item / Model		CS-MGA□4.5	CS-MGA□6	CS-MGA□8	CS-MGA□10	CS-MGA□12	CS-MGA□16	CS-MGA□20
Bore size mm [in.]		4.5 [0.177]	6 [0.236]	8 [0.315]	10 [0.394]	12 [0.472]	16 [0.630]	20 [0.787]
Operation type		Double acting type						
Media		Air						
Operating pressure range MPa [psi.]		0.2～0.7 [29～102]		0.15～0.7 [22～102]		0.1～0.7 [15～102]		
Proof pressure MPa [psi.]		1.05 [152]						
Operating temperature range °C [°F]		0～60 [32～140]						
Operating speed range mm/s [in./sec.]		30～300 [1.2～12]				20～300 [0.8～12]		
Cushion	Standard	None	Rubber bumper					
	Optional	—			Shock absorber			
Port size		M3 × 0.5				M5 × 0.8		
Lubrication	Cylinder portion	Prohibited						
	Guide portion	Required (CGL grease Nippon Thompson Co., Ltd. made) Note 1						
Perpendicularity of end plate mm [in.]		0.1 [0.004]						
Stroke tolerance mm [in.]		$^{+1}_{0}$ [$^{+0.039}_{0}$]						
Repeatability Note 2 mm [in.]		—			± 0.02 [± 0.0008](Shock absorber)			
Stroke adjusting range Note 2 mm [in.]	Rubber stopper extended side	—				−9～0 [−0.354～0]	−8～0 [−0.315～0]	−8～0 [−0.315～0]
	Rubber stopper retracted side	—				−11～0 [−0.433～0]	−9～0 [−0.354～0]	−11～0 [−0.433～0]
	Shock absorber extended side	—			−8～0 [−0.315～0]	−12～0 [−0.472～0]	−13～0 [−0.512～0]	−22～0 [−0.866～0]
	Shock absorber retracted side	—			−9～0 [−0.354～0]	−14～0 [−0.551～0]	−14～0 [−0.551～0]	−25～0 [−0.984～0]
Allowable moment N·m[in·lbf]	Mp	0.24 [2.12]	0.28 [2.48]	0.28 [2.48]	0.28 [2.48]	1.5 [13.3]	2.1 [18.6]	2.5 [22.1]
	My	0.29 [2.57]	0.34 [3.01]	0.34 [3.01]	0.34 [3.01]	1.7 [15.0]	2.5 [22.1]	3.0 [26.6]
	Mr	0.22 [1.95]	0.23 [2.04]	0.38 [3.36]	0.38 [3.36]	2.6 [23.0]	4.3 [38.1]	4.8 [42.5]
Cleanliness Note 3 Note 4		Class 5 or equivalent (Corresponds to FED-STD Class 100)				Class 6 or equivalent (Corresponds to FED-STD Class 1000)		
Number of available sensor switches (optional)		2						

Notes: 1. Apply lithium soap-based grease on the raceway surface of the track rail in the guide portion every six months or 3 million operations.
2. For units with stroke adjusting mechanism.
3. With shock absorber type included.
4. When suctioned at the dust collection port. Koganei standards. For details, see p.171.

Remark 1: For the specifications and details of the shock absorber, see the General Catalog and Shock Absorber Catalog.
2: Touching the body of the product with bare hands may cause rusting because of salt content in sweat.

Cylinder Thrust

● Cylinder thrust is exactly the same as the standard cylinder. See p.20.

Bore Size and Stroke

mm [in.]

Bore size	Standard strokes
4.5 [0.177]	5Note, 10
6 [0.236]	5Note, 10, 15, 20, 25Note, 30
8 [0.315]	5Note, 10, 15Note, 20, 25Note, 30
10 [0.395]	5Note, 10, 15Note, 20, 25Note, 30, 40Note, 50
12 [0.472]	10Note, 15Note, 20, 30Note, 40, 50Note, 60, 70Note, 80
16 [0.630]	10Note, 15Note, 20, 30Note, 40, 50Note, 60, 70Note, 80, 90Note, 100
20 [0.787]	10Note, 15Note, 20, 30Note, 40, 50Note, 60, 70Note, 80, 90Note, 100Note, 120Note, 125

Note: The collar packed is used in these strokes.

Order Codes

● φ 4.5 [0.177] ~ φ8 [0.315]

CS - MGA □ □ × - □ - □ □ - □ □ □

Clean system product

Mini guide slider
Blank : Standard
H : Rear piping

Magnet and sensor rail Note
Blank : No magnet and sensor rail
S : With magnet and sensor rail(One sensor rail for φ 4.5 [0.177] cylinders and two sensor rails for φ 6 [0.236] to φ 8 [0.315] cylinders)
SS : With magnet and sensor rail (Two sensor rails for φ 4.5 [0.177] cylinders only)

Bore size
×
Stroke
● See the bore size and stroke on p.144.

Piping direction
R : Right side as viewed from the rod side
L : Left side as viewed from the rod side

Locating pin
Blank : No pin
P : With pin

Number of pins
1 : With one pin
2 : With two pins
3 : With three pins
4 : With four pins

Sensor switch type
Blank : No sensor switch
ZE135 : 2-lead wire, solid state type
ZE155 : 3-lead wire, solid state NPN output type
ZE175 : 3-lead wire, solid state PNP output type
ZE235 : 2-lead wire, solid state type
ZE255 : 3-lead wire, solid state NPN output type
ZE275 : 3-lead wire, solid state PNP output type
ZE101 : 2-lead wire, reed switch type
ZE102 : 2-lead wire, reed switch type
ZE201 : 2-lead wire, reed switch type
ZE202 : 2-lead wire, reed switch type
ZLS1: Linear magnetic sensor, horizontal Note
ZLS2: Linear magnetic sensor, vertical Note
●See p.172 for details of solid state type and reed switch type sensor switches and see p.178 for details of linear magnetic sensors.
Note: Comes with the controller (ZL1-C-3L).

Lead wire length
A : 1000 mm [39 in.]
B : 3000 mm [118 in.]
G : 300 mm [11.8 in.] with M8 connector, only for **ZE175** and **ZE275**

Number of sensor switches Note
1 : With one sensor switch
2 : With two sensor switches

● φ 10 [0.394] ~ φ20 [0.787]

CS - MGA □ □ × - □ - □ □ - □ □ - □ □ □

Clean system product

Mini guide slider
Blank : Standard
H : Rear piping

Magnet and sensor rail Note
Blank : No magnet and sensor rail
S : With magnet and sensor rail

Bore size
×
Stroke
● See the bore size and stroke on p.144.

Piping direction
R : Right side as viewed from the rod side
L : Left side as viewed from the rod side

Stroke adjusting mechanism
Blank : No stroke adjusting mechanism
RS : With rubber stopper Note 1
SS : With shock absorber

Note 1: No rubber stopper available for φ 10.
2: Comes with the controller (ZL1-C-3L).

Stroke adjusting position
Blank: No stroke adjustment
2 : Both ends (with two stroke adjustments)
F : Extended end (with one stroke adjustment)
R : Retracted end (with one stroke adjustment)

Locating pin
Blank : No pin
P : With pin

Number of pins
1 : With one pin
2 : With two pins
3 : With three pins
4 : With four pins

Sensor switch type
Blank : No sensor switch
ZE135 : 2-lead wire, solid state type
ZE155 : 3-lead wire, solid state NPN output type
ZE175 : 3-lead wire, solid state PNP output type
ZE235 : 2-lead wire, solid state type
ZE255 : 3-lead wire, solid state NPN output type
ZE275 : 3-lead wire, solid state PNP output type
ZE101 : 2-lead wire, reed switch type
ZE102 : 2-lead wire, reed switch type
ZE201 : 2-lead wire, reed switch type
ZE202 : 2-lead wire, reed switch type
ZLS1: Linear magnetic sensor, horizontal Note2
ZLS2: Linear magnetic sensor, vertical Note2
●See p.172 for details of solid state type and reed switch type sensor switches and see p.178 for details of linear magnetic sensors.

Lead wire length
A : 1000 mm [39 in.]
B : 3000 mm [118 in.]
G : 300 mm [11.8 in.] with M8 connector, only for **ZE175** and **ZE275**

Number of sensor switches
1 : With one sensor switch
2 : With two sensor switches

● Mini Guide Sliders φ10, 12, 16, 20 [φ 0.394, 0.472, 0.630, 0.787] Product Range and Optional Combinations

Model	Type	Rubber stopper			Shock absorber		
		Extended end -RSF	Retracted end -RSR	Both ends -RS2	Extended end -SSF	Retracted end -SSR	Both ends -SS2
CS-MGA10	Clean system cylinder	—	—	—	●	●	●
CS-MGAH10	Clean system cylinder, rear piping	—	—	—	●	—	—
CS-MGA12, 16, 20	Clean system cylinder	●	●	●	●	●	●
CS-MGAH12, 16, 20	Clean system cylinder, rear piping	●	—	—	●	—	—

■ Additional Parts

● The sensor rail, magnet, and locating pin are the same as the standard cylinder. See p.25
Remark: For the dimensions of additional parts, see p.143. For the specifications and dimensions of the shock absorber unit, see the General Catalog and Shock Absorber Catalog.

● Stopper and shock absorber

mm [in.]

Bore size	Rubber stopper type	Shock absorber model
10[0.394]	—	**CS-KSHC3 × 3-AB**
12[0.472]	**CRK570**	**CS-KSHC4 × 4-BD**
16[0.630]	**CRK571**	**CS-KSHC5 × 5-DE**
20[0.787]	**CRK572**	**CS-KSHC6 × 8-DE**

Remark: The set includes a mounting nut.

Rubber stopper

Shock absorber

Mass

● φ 4.5 [0.177] ~ φ10 [0.394]

g [oz.]

Model	Stroke mm	Standard (CS-MGA)	Rear piping (CS-MGAH)	Additional mass: Magnet and sensor rail	Buffer	Stroke adjusting bracket -□S2	Stroke adjusting bracket -□SF	Stroke adjusting bracket -□SR	Shock absorber (1 pc.)	Sensor switch (1 pc.) ZE□□□A ZE□□□G	Sensor switch (1 pc.) ZE□□□B
CS-MGA□4.5	5 [0.176]	45 [1.59]	50 [1.76]	4 [0.14], 5 [0.18]Note	3 [0.11]	—	—	—	—	15 [0.53]	35 [1.24]
	10 [0.353]	45 [1.59]	50 [1.76]	4 [0.14], 5 [0.18]Note	3 [0.11]						
CS-MGA□6	5 [0.176]	61 [2.15]	67 [2.36]	5 [0.18]	4 [0.14]					15 [0.53]	35 [1.24]
	10 [0.353]	61 [2.15]	67 [2.36]	5 [0.18]	4 [0.14]						
	15 [0.529]	69 [2.43]	75 [2.65]	6 [0.21]	4 [0.14]						
	20 [0.705]	77 [2.72]	84 [2.96]	6 [0.21]	4 [0.14]						
	25 [0.882]	93 [3.28]	101 [3.56]	7 [0.25]	4 [0.14]						
	30 [1.058]	93 [3.28]	101 [3.56]	7 [0.25]	4 [0.14]						
CS-MGA□8	5 [0.176]	87 [3.07]	94 [3.37]	5 [0.18]	5 [0.18]					15 [0.53]	35 [1.24]
	10 [0.353]	87 [3.07]	94 [3.37]	5 [0.18]	5 [0.18]						
	15 [0.529]	108 [3.81]	115 [4.06]	6 [0.21]	5 [0.18]						
	20 [0.705]	108 [3.81]	115 [4.06]	6 [0.21]	5 [0.18]						
	25 [0.882]	129 [4.55]	138 [4.87]	7 [0.25]	5 [0.18]						
	30 [1.058]	129 [4.55]	138 [4.87]	7 [0.25]	5 [0.18]						
CS-MGA□10	5 [0.176]	109 [3.85]	116 [4.09]	5 [0.18]	6 [0.21]	16 [0.56]	9 [0.32]	13 [0.46]	3 [0.11]	15 [0.53]	35 [1.24]
	10 [0.353]	109 [3.85]	116 [4.09]	5 [0.18]	6 [0.21]	15 [0.53]	8 [0.28]	12 [0.42]			
	15 [0.529]	136 [4.80]	144 [5.08]	6 [0.21]	6 [0.21]	16 [0.56]	9 [0.32]	13 [0.46]			
	20 [0.705]	136 [4.80]	144 [5.08]	6 [0.21]	6 [0.21]	15 [0.53]	8 [0.28]	12 [0.42]			
	25 [0.882]	163 [5.75]	172 [6.07]	7 [0.25]	6 [0.21]	16 [0.56]	9 [0.32]	13 [0.46]			
	30 [1.058]	163 [5.75]	172 [6.07]	7 [0.25]	6 [0.21]	15 [0.53]	8 [0.28]	12 [0.42]			
	40 [1.411]	244 [8.61]	255 [9.00]	10 [0.35]	6 [0.21]	20 [0.71]	13 [0.46]	17 [0.60]			
	50 [1.764]	244 [8.61]	255 [9.00]	10 [0.35]	6 [0.21]	18 [0.64]	11 [0.39]	15 [0.53]			

Note: For SS (two-sensor-rails specification) cylinders

● φ 12 [0.472] ~ φ20 [0.787]

g [oz.]

Model	Stroke mm	Standard (CS-MGA)	Rear piping (CS-MGAH)	Additional mass: Magnet and sensor rail	Stroke adjusting bracket -□S2	Stroke adjusting bracket -□SF	Stroke adjusting bracket -□SR	Rubber stopper (1 pc.)	Shock absorber (1 pc.)	Sensor switch (1 pc.) ZE□□□A ZE□□□G	Sensor switch (1 pc.) ZE□□□B
CS-MGA□12	10 [0.353]	224 [7.90]	258 [9.10]	12 [0.42]	31 [1.09]	19 [0.67]	27 [0.95]	4 [0.14]	5 [0.18]	15 [0.53]	35 [1.24]
	15 [0.529]	224 [7.90]	258 [9.10]	12 [0.42]	29 [1.02]	17 [0.60]	25 [0.88]				
	20 [0.705]	224 [7.90]	258 [9.10]	12 [0.42]	27 [0.95]	15 [0.53]	23 [0.81]				
	30 [1.058]	296 [10.44]	333 [11.75]	17 [0.60]	31 [1.09]	19 [0.67]	27 [0.95]				
	40 [1.411]	296 [10.44]	333 [11.75]	17 [0.60]	27 [0.95]	15 [0.53]	23 [0.81]				
	50 [1.764]	368 [12.98]	408 [14.39]	22 [0.78]	31 [1.09]	19 [0.67]	27 [0.95]				
	60 [2.116]	368 [12.98]	408 [14.39]	22 [0.78]	27 [0.95]	15 [0.53]	23 [0.81]				
	70 [2.469]	440 [15.52]	483 [17.04]	27 [0.95]	31 [1.09]	19 [0.67]	27 [0.95]				
	80 [2.822]	440 [15.52]	483 [17.04]	27 [0.95]	27 [0.95]	15 [0.53]	23 [0.81]				
CS-MGA□16	10 [0.353]	347 [12.24]	394 [13.90]	12 [0.42]	60 [2.12]	35 [1.24]	52 [1.83]	8 [0.28]	10 [0.35]	15 [0.53]	35 [1.24]
	15 [0.529]	347 [12.24]	394 [13.90]	12 [0.42]	56 [1.98]	31 [1.09]	48 [1.69]				
	20 [0.705]	347 [12.24]	394 [13.90]	12 [0.42]	53 [1.87]	28 [0.99]	45 [1.59]				
	30 [1.058]	450 [15.87]	501 [17.67]	17 [0.60]	60 [2.12]	35 [1.24]	52 [1.83]				
	40 [1.411]	450 [15.87]	501 [17.67]	17 [0.60]	53 [1.87]	28 [0.99]	45 [1.59]				
	50 [1.764]	553 [19.51]	608 [21.45]	22 [0.78]	60 [2.12]	35 [1.24]	52 [1.83]				
	60 [2.116]	553 [19.51]	608 [21.45]	22 [0.78]	53 [1.87]	28 [0.99]	45 [1.59]				
	70 [2.469]	656 [23.14]	715 [25.22]	27 [0.95]	60 [2.12]	35 [1.24]	52 [1.83]				
	80 [2.822]	656 [23.14]	715 [25.22]	27 [0.95]	53 [1.87]	28 [0.99]	45 [1.59]				
	90 [3.175]	893 [31.50]	956 [33.72]	38 [1.34]	74 [2.610]	49 [1.73]	66 [2.33]				
	100 [3.527]	893 [31.50]	956 [33.72]	38 [1.34]	67 [2.36]	42 [1.48]	59 [2.08]				
CS-MGA□20	10 [0.353]	542 [19.12]	595 [20.99]	12 [0.42]	74 [2.61]	40 [1.41]	60 [2.12]	15 [0.53]	21 [0.74]	15 [0.53]	35 [1.24]
	15 [0.529]	542 [19.12]	595 [20.99]	12 [0.42]	70 [2.47]	36 [1.27]	56 [1.98]				
	20 [0.705]	542 [19.12]	595 [20.99]	12 [0.42]	67 [2.36]	33 [1.16]	53 [1.87]				
	30 [1.058]	686 [24.20]	744 [26.24]	17 [0.60]	74 [2.61]	40 [1.41]	60 [2.12]				
	40 [1.411]	686 [24.20]	744 [26.24]	17 [0.60]	67 [2.36]	33 [1.16]	53 [1.87]				
	50 [1.764]	830 [29.28]	893 [31.50]	22 [0.78]	74 [2.61]	40 [1.41]	60 [2.12]				
	60 [2.116]	830 [29.28]	893 [31.50]	22 [0.78]	67 [2.36]	33 [1.16]	53 [1.87]				
	70 [2.469]	974 [34.36]	1042 [36.76]	27 [0.95]	74 [2.61]	40 [1.41]	60 [2.12]				
	80 [2.822]	974 [34.36]	1042 [36.76]	27 [0.95]	67 [2.36]	33 [1.16]	53 [1.87]				
	90 [3.175]	1493 [52.66]	1596 [56.30]	38 [1.34]	106 [3.74]	72 [2.54]	92 [3.25]				
	100 [3.527]	1493 [52.66]	1596 [56.30]	38 [1.34]	99 [3.49]	65 [2.29]	85 [3.00]				
	120 [4.233]	1493 [52.66]	1596 [56.30]	38 [1.34]	84 [2.96]	51 [1.80]	71 [2.50]				
	125 [4.409]	1493 [52.66]	1596 [56.30]	38 [1.34]	81 [2.86]	47 [1.66]	67 [2.36]				

Remark: For the mass of the linear magnetic sensor controller, see p.178.

Inner Construction

CS-MGA□4.5

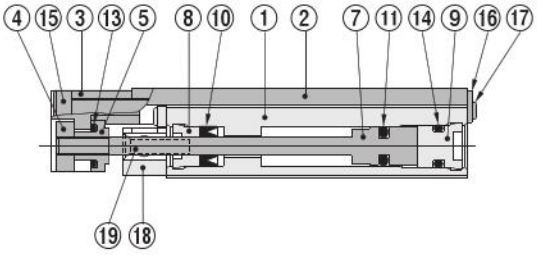

CS-MGA□6, 8

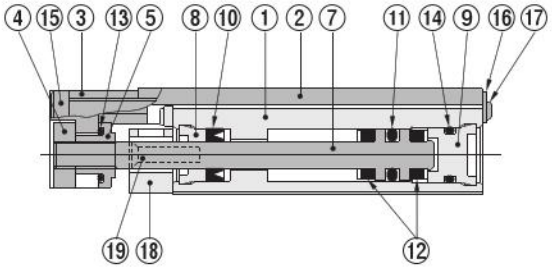

CS-MGA□10 ~□20

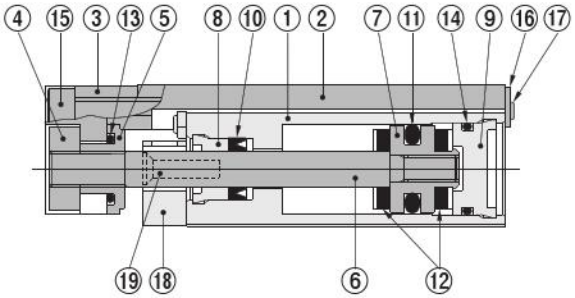

CS-MGAS□ (with magnet and sensor rail)

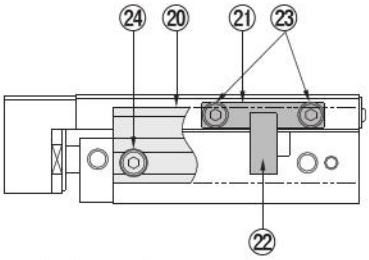

CS-MGA□10 ~□20 (with shock absorber)

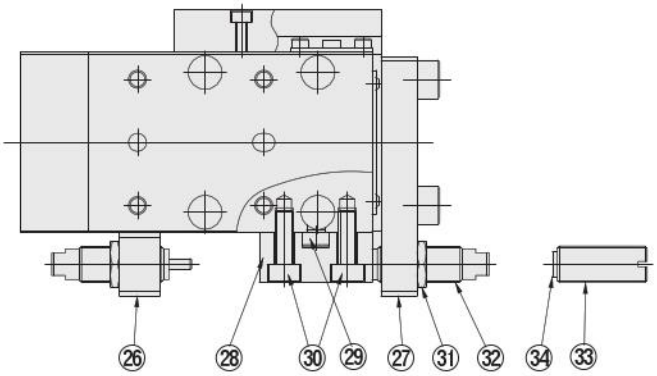

Locating pin

Major Parts and Materials

No.	Parts \ Model	CS-MGA□4.5	CS-MGA□6	CS-MGA□8	CS-MGA□10~□20
①	Body	Stainless steel (heat treated)			
②	Table	Stainless steel (heat treated)			
③	Plate	Aluminum alloy (special wear-resistance treated)			
④	Nut A	Stainless steel			
⑤	Nut B	Stainless steel			
⑥	Piston rod	—			Stainless steel
⑦	Piston Note	Stainless steel			Aluminum alloy (special rust prevention treated)
⑧	Rod cap	Oil impregnated plastic bushing (polyacetal)			
⑨	Head cap	Plastic			
⑩	Rod seal	Synthetic rubber (NBR)			
⑪	Piston seal	Synthetic rubber (NBR)			
⑫	Bumper	—	Synthetic rubber (urethane) / NBR for ϕ 20 [0.787]		
⑬	O-ring	Synthetic rubber (NBR)			
⑭	O-ring	Synthetic rubber (NBR)			
⑮	Screw	Stainless steel			
⑯	Holder plate	Stainless steel			
⑰	Screw	Stainless steel			
⑱	Dust collection block	Aluminum alloy (anodized)			
⑲	Screw	Stainless steel			
⑳	Sensor rail	Aluminum alloy (anodized)			
㉑	Magnet holder	Aluminum alloy (anodized)			
㉒	Magnet	Plastic magnet			
㉓	Screw	Stainless steel			
㉔	Screw	Stainless steel			
㉕	Locating pin	Steel (heat treated)			

Note: In **CS-MGA□4.5, CS-MGA□6** and **CS-MGA□8**, the piston and piston rod are combined as single-piece construction.

No.	Parts \ Model	CS-MGA□10 ~□20
㉖	Bracket A	Aluminum alloy (anodized)
㉗	Bracket B	Aluminum alloy (anodized)
㉘	Stopper	Steel (heat treated and nickel plated)
㉙	Locating pin	Steel (heat treated)
㉚	Screw	Stainless steel
㉛	Nut	Mild steel (zinc plated) ϕ10: Stainless steel
㉜	Shock absorber	—
㉝	Adjusting bolt	Steel (nickel plated)
㉞	Bumper	Synthetic rubber (NBR)

Internal Construction (Rear Piping Specifications)

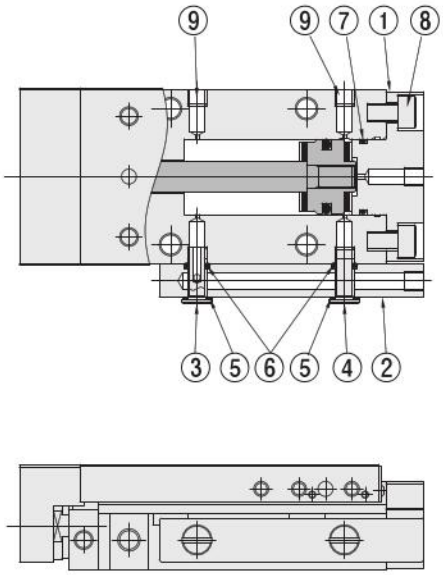

Major Parts and Materials

No.	Model / Parts	CS-MGAH□4.5 to □20
①	Head cap	Aluminum alloy (anodized)
②	Piping block	Aluminum alloy (anodized)
③	Screw	Stainless steel
④	Screw	Stainless steel
⑤	Gasket	Synthetic rubber (NBR) baked on stainless steel
⑥	O-ring	Synthetic rubber (NBR)
⑦	O-ring	Synthetic rubber (NBR)
⑧	Screw	Stainless steel
⑨	Screw	Stainless steel

CS-MGA□4.5

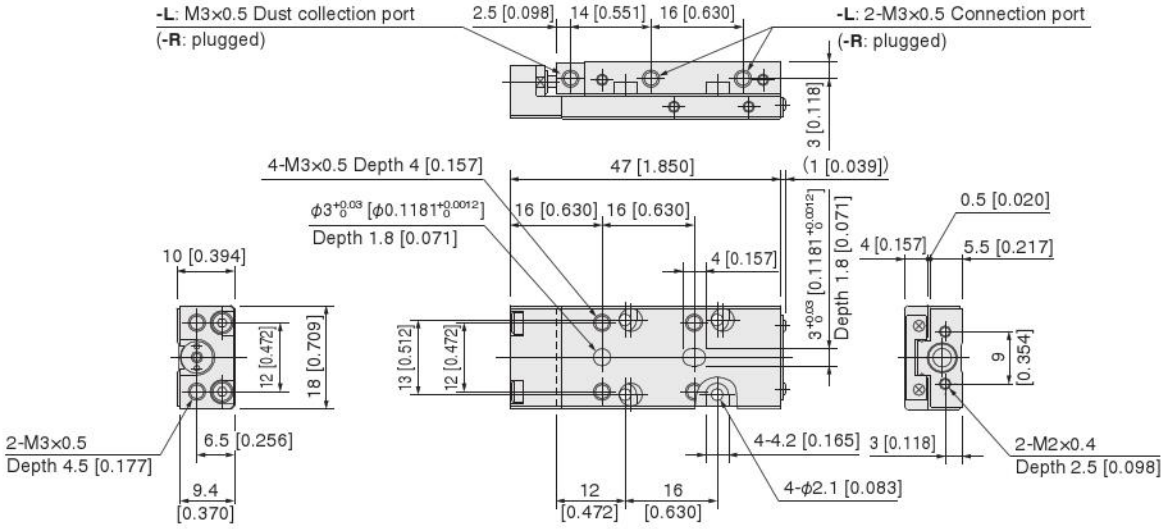

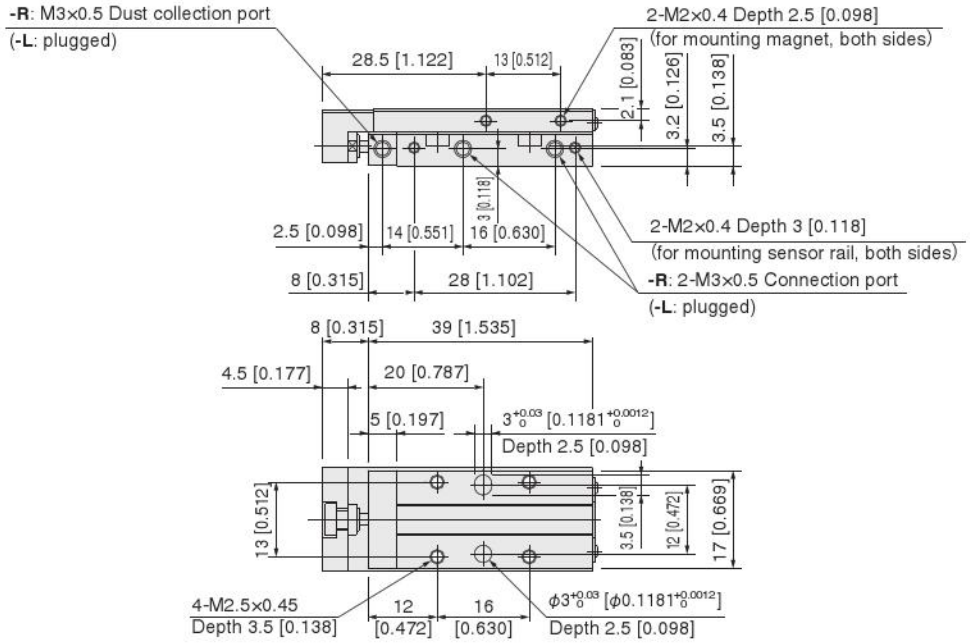

In the case of magnet and sensor rail installed (Piping direction: -R)

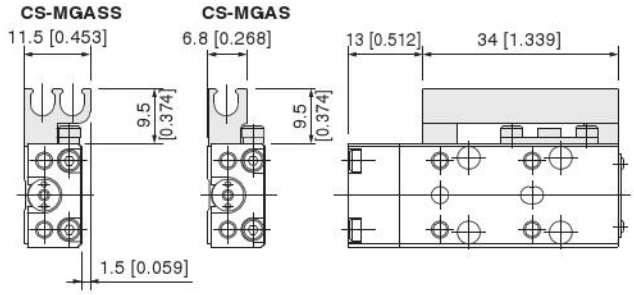

In the case of magnet and sensor rail installed (Piping direction: -L)

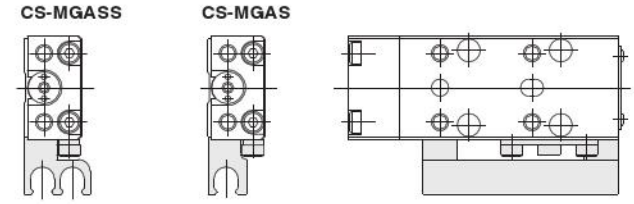

Locating pin: -P (P-MGA1)

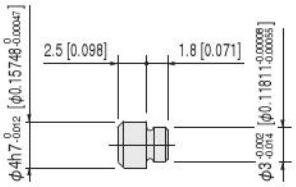

● Rear piping specifications

CS-MGAH□4.5

Piping direction: -R

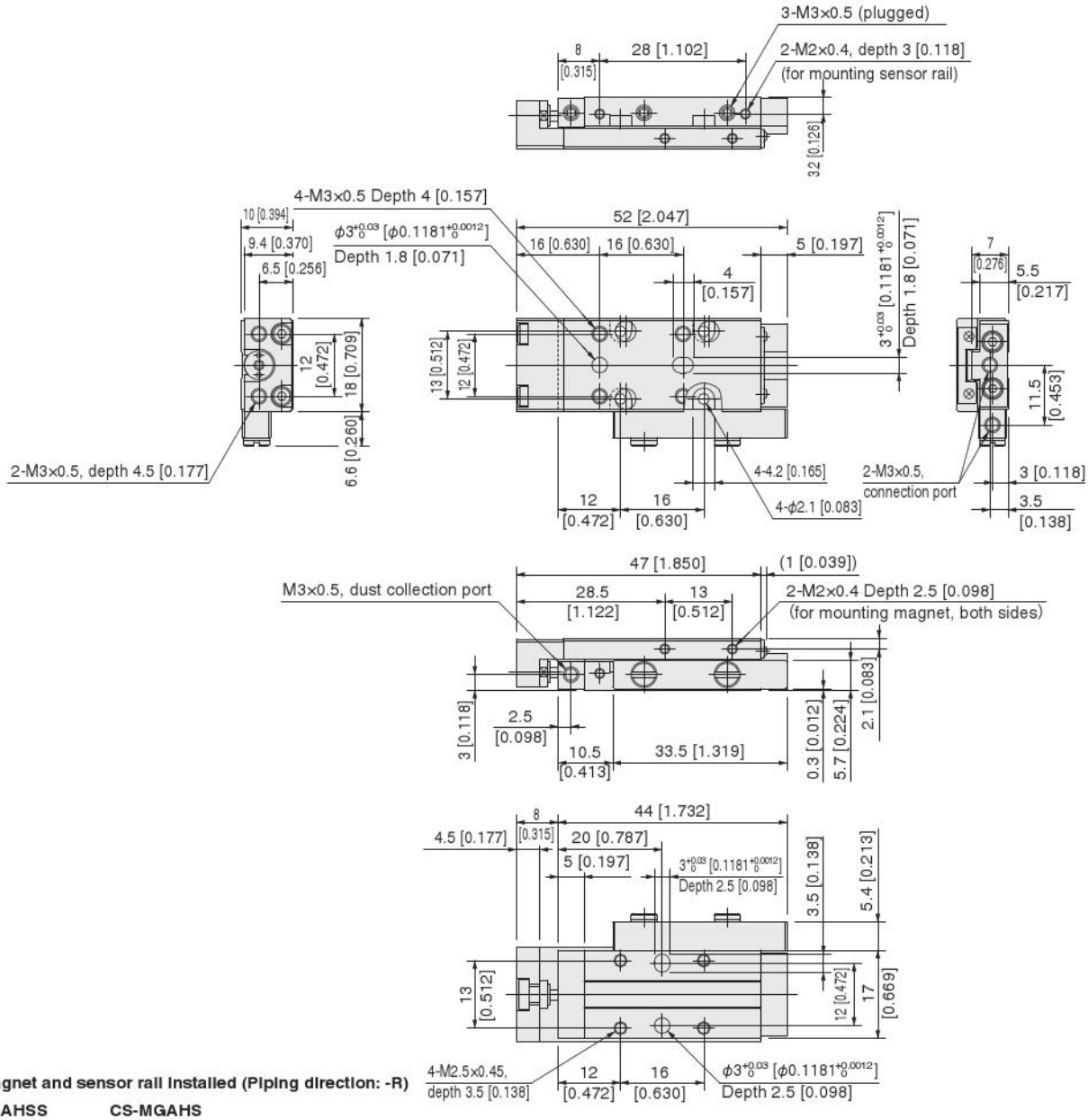

When magnet and sensor rail installed (Piping direction: -R)

CS-MGAHSS CS-MGAHS

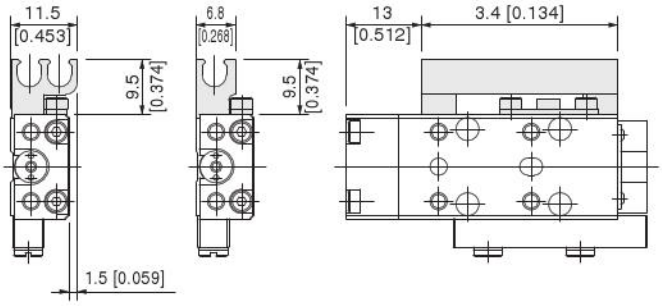

When magnet and sensor rail installed (Piping direction: -L)

CS-MGAHSS CS-MGAHS

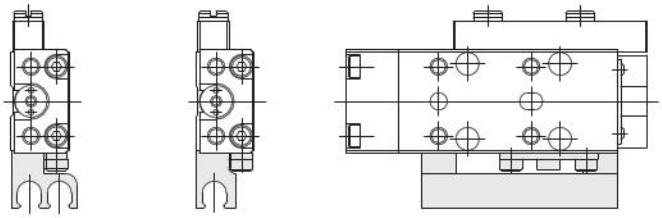

Locating pin: -P (P-MGA1)

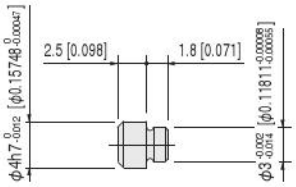

CS-MGA□6

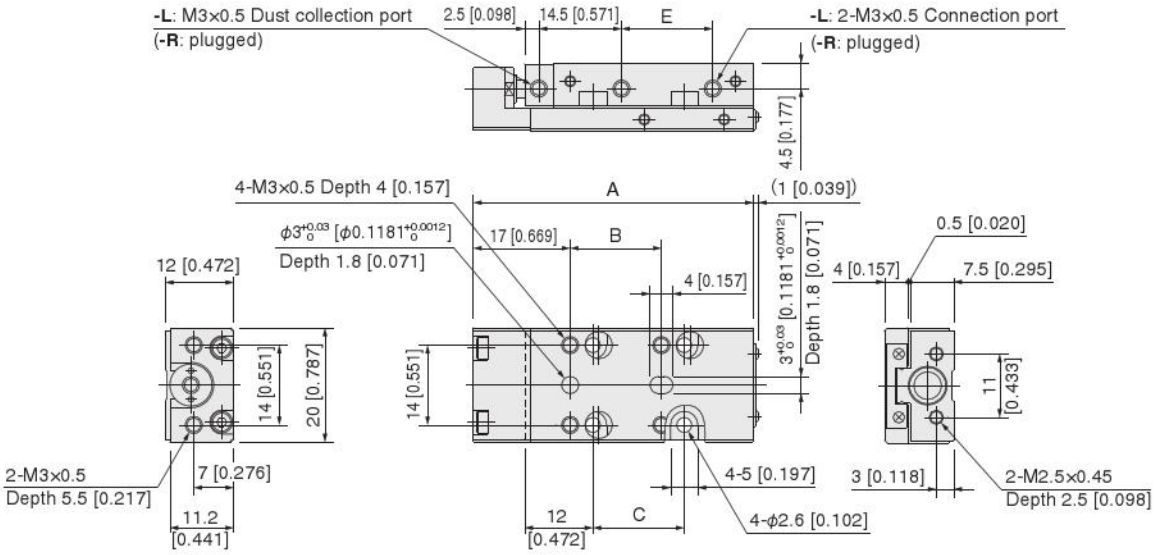

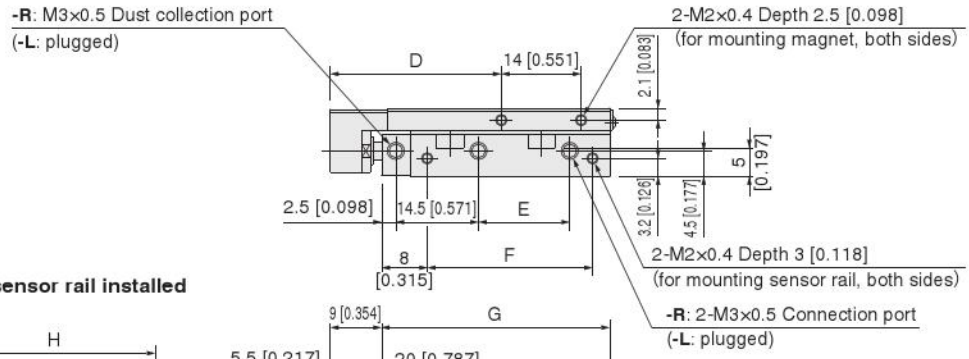

In the case of magnet and sensor rail installed (Piping direction: -R)

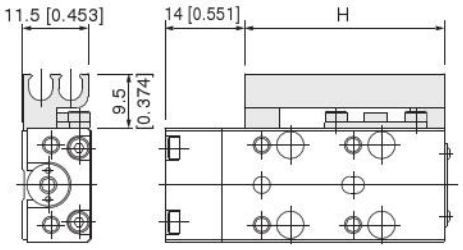

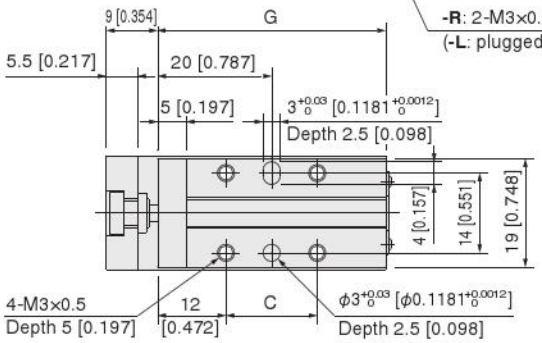

In the case of magnet and sensor rail installed (Piping direction: -L)

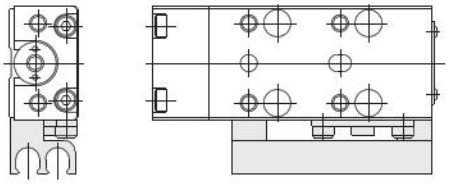

Locating pin: -P (P-MGA1)

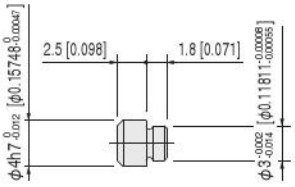

Stroke	A	B	C	D	E	F	G	H
5, 10	49[1.929]	16[0.630]	16[0.630]	30[1.181]	16[0.630]	29[1.142]	40[1.575]	35[1.378]
15	54[2.126]	21[0.827]	21[0.827]	35[1.378]	21[0.827]	34[1.339]	45[1.772]	40[1.575]
20	59[2.323]	26[1.024]	26[1.024]	40[1.575]	26[1.024]	39[1.535]	50[1.969]	45[1.772]
25, 30	69[2.717]	36[1.417]	36[1.417]	50[1.969]	36[1.417]	49[1.929]	60[2.362]	55[2.165]

● Rear piping specifications

CS-MGAH□6

Piping direction: -R

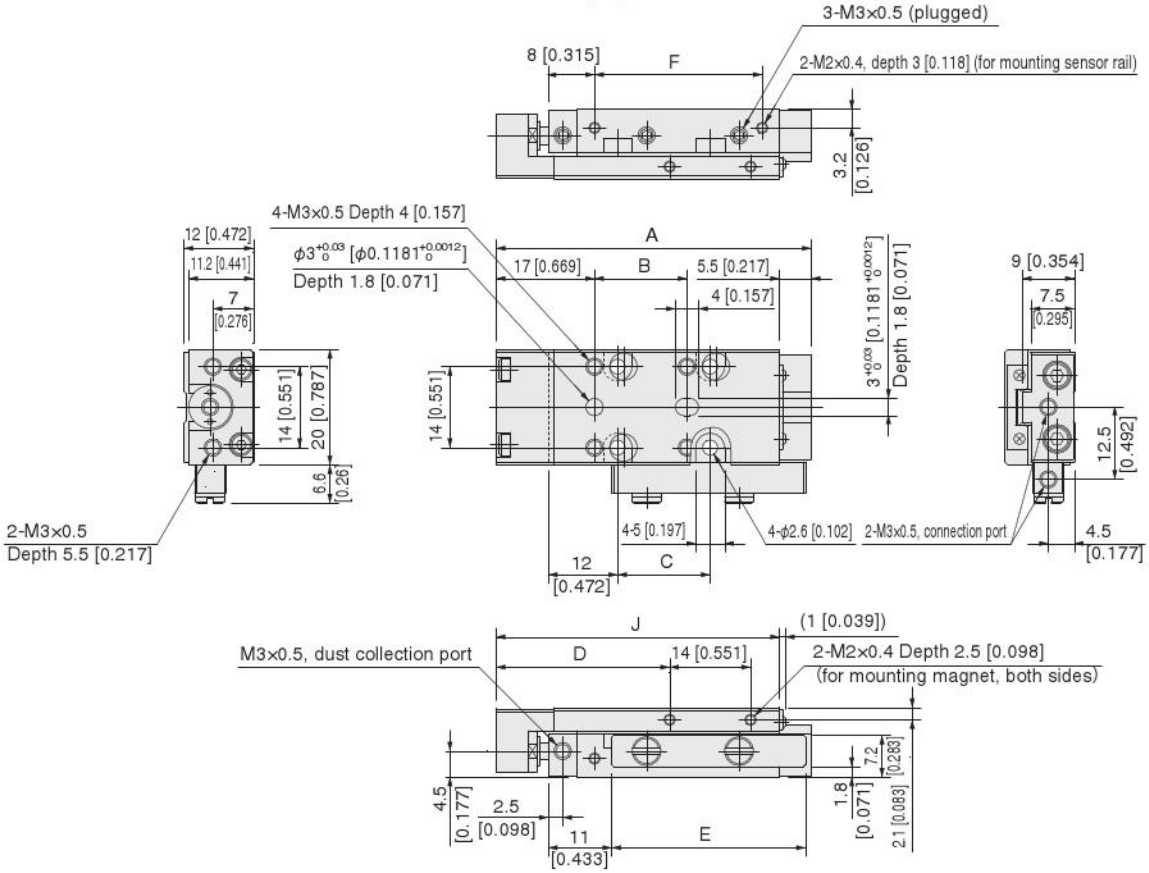

When magnet and sensor rail installed (Piping direction: -R)

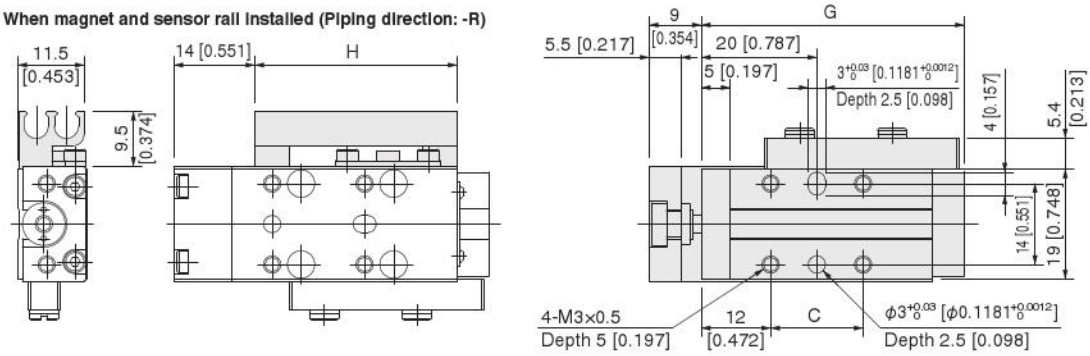

When magnet and sensor rail installed (Piping direction: -L)

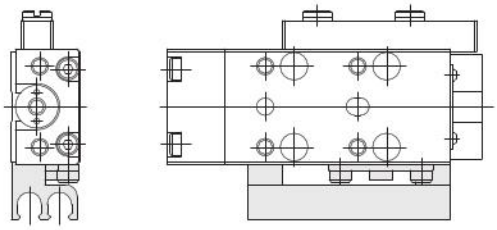

Locating pin: -P (P-MGA1)

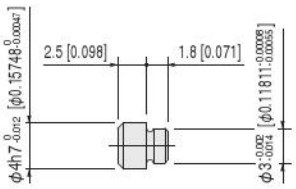

Stroke	A	B	C	D	E	F	G	H	J
5, 10	54.5 [2.146]	16 [0.630]	16 [0.630]	30 [1.181]	33.5 [1.319]	29 [1.142]	45.5 [1.791]	35 [1.378]	49 [1.929]
15	59.5 [2.343]	21 [0.827]	21 [0.827]	35 [1.378]	38.5 [1.516]	34 [1.339]	50.5 [1.988]	40 [1.575]	54 [2.126]
20	64.5 [2.539]	26 [1.024]	26 [1.024]	40 [1.575]	43.5 [1.713]	39 [1.535]	55.5 [2.185]	45 [1.772]	59 [2.323]
25, 30	74.5 [2.933]	36 [1.417]	36 [1.417]	50 [1.969]	53.5 [2.106]	49 [1.929]	65.5 [2.579]	55 [2.165]	69 [2.717]

CS-MGA□8

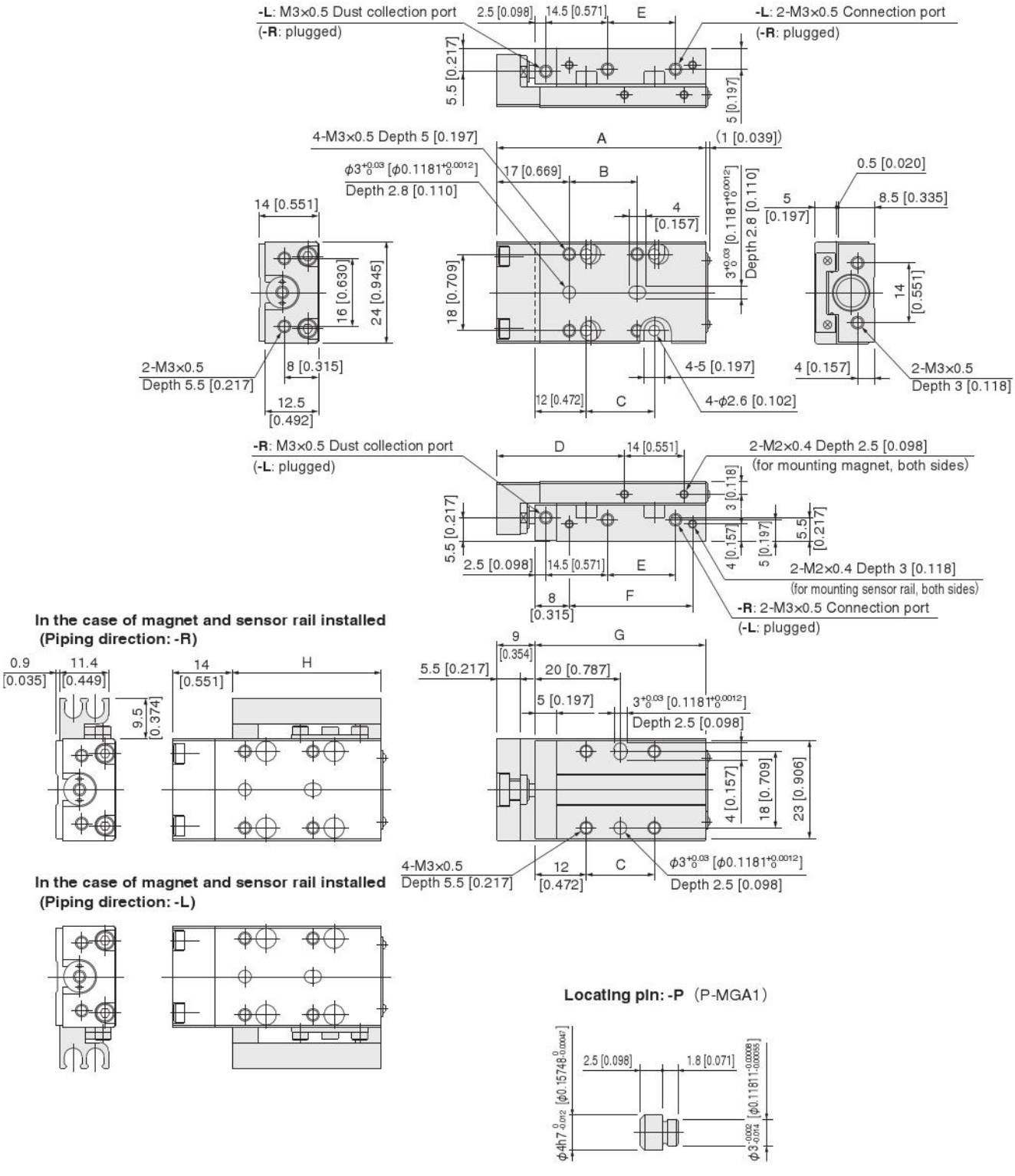

Stroke	A	B	C	D	E	F	G	H
5, 10	49 [1.929]	16 [0.630]	16 [0.630]	30 [1.181]	16 [0.630]	29 [1.142]	40 [1.575]	35 [1.378]
15, 20	59 [2.323]	26 [1.024]	26 [1.024]	40 [1.575]	26 [1.024]	39 [1.535]	50 [1.969]	45 [1.772]
25, 30	69 [2.717]	36 [1.417]	36 [1.417]	50 [1.969]	36 [1.417]	49 [1.929]	60 [2.362]	55 [2.165]

● Rear piping specifications

CS-MGAH□8

Piping direction: -R

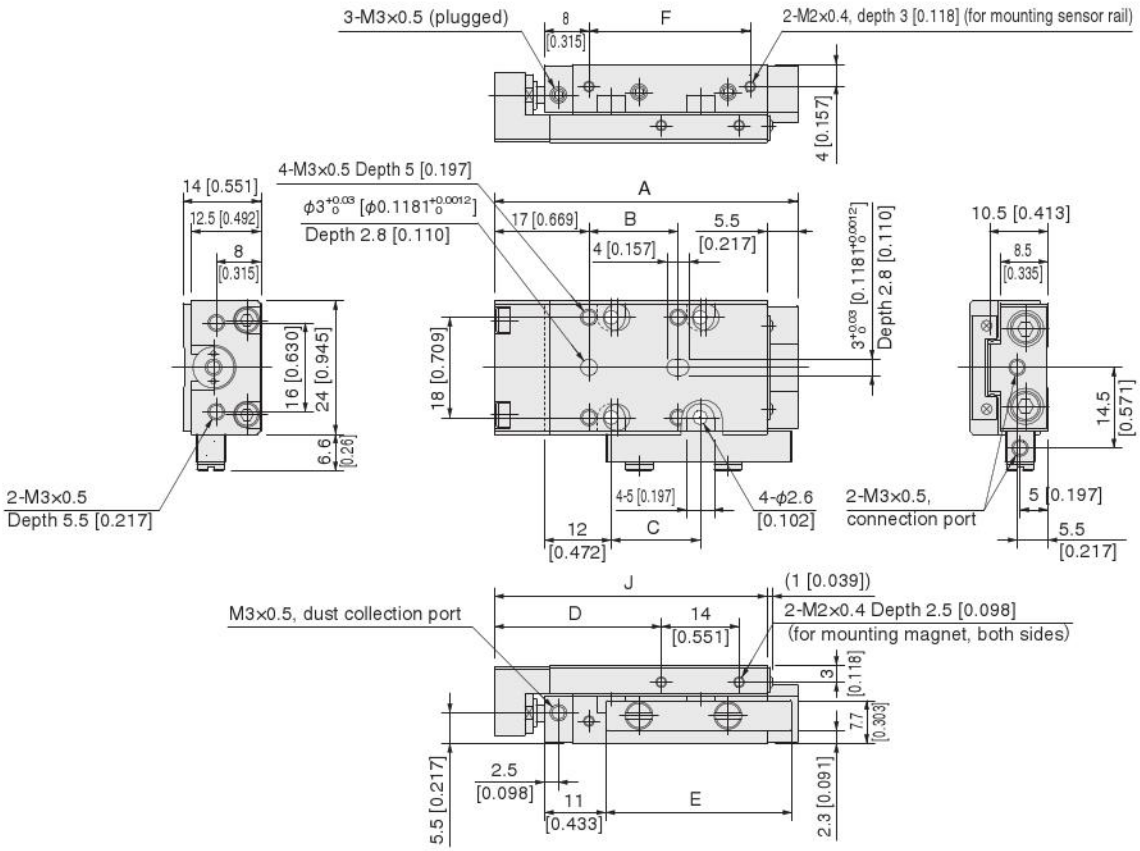

When magnet and sensor rail installed (Piping direction: -R)

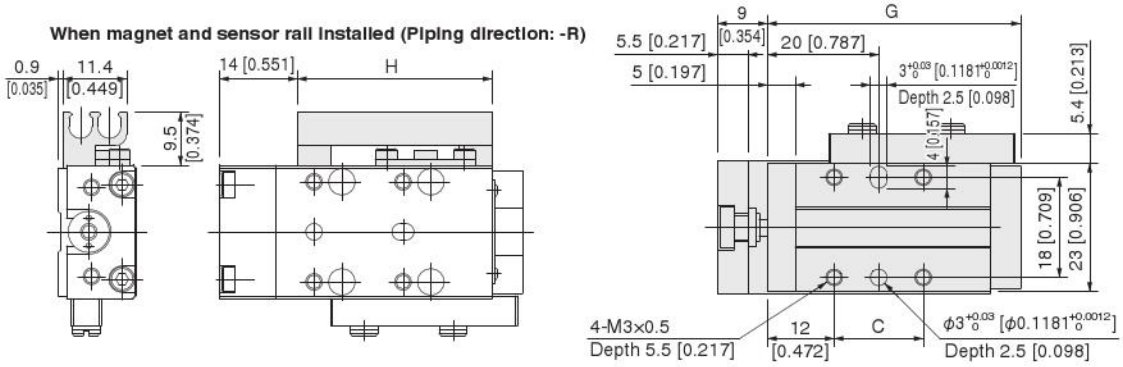

When magnet and sensor rail installed (Piping direction: -L)

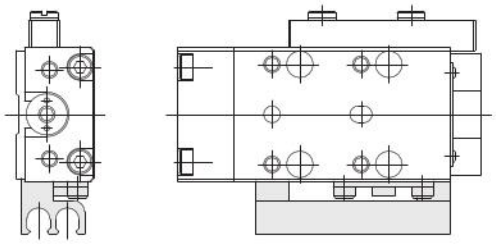

Locating pin: -P (P-MGA1)

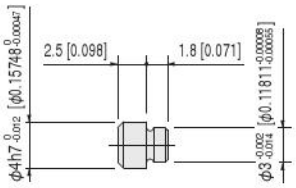

Stroke	A	B	C	D	E	F	G	H	J
5, 10	54.5 [2.146]	16 [0.630]	16 [0.630]	30 [1.181]	33.5 [1.319]	29 [1.142]	45.5 [1.791]	35 [1.378]	49 [1.929]
15, 20	64.5 [2.539]	26 [1.024]	26 [1.024]	40 [1.575]	43.5 [1.713]	39 [1.535]	55.5 [2.185]	45 [1.772]	59 [2.323]
25, 30	74.5 [2.933]	36 [1.417]	36 [1.417]	50 [1.969]	53.5 [2.106]	49 [1.929]	65.5 [2.579]	55 [2.165]	69 [2.717]

CS-MGA10

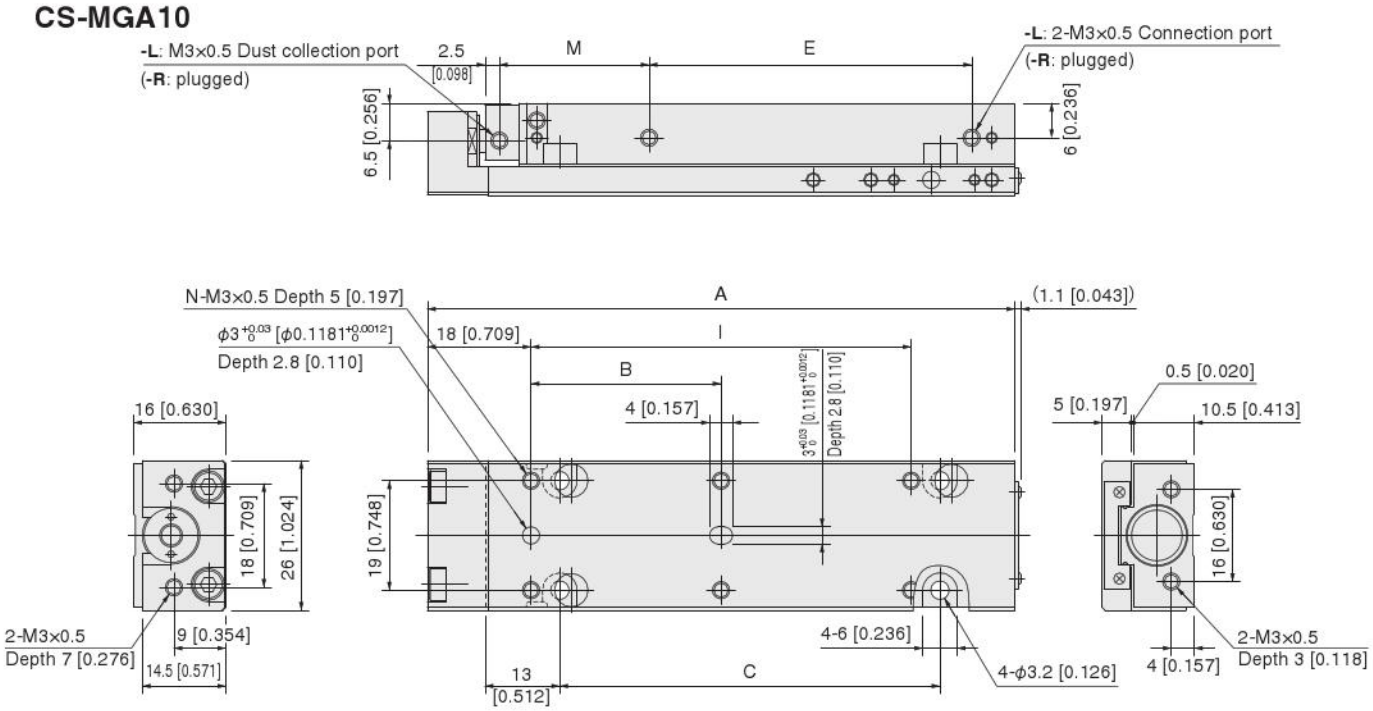

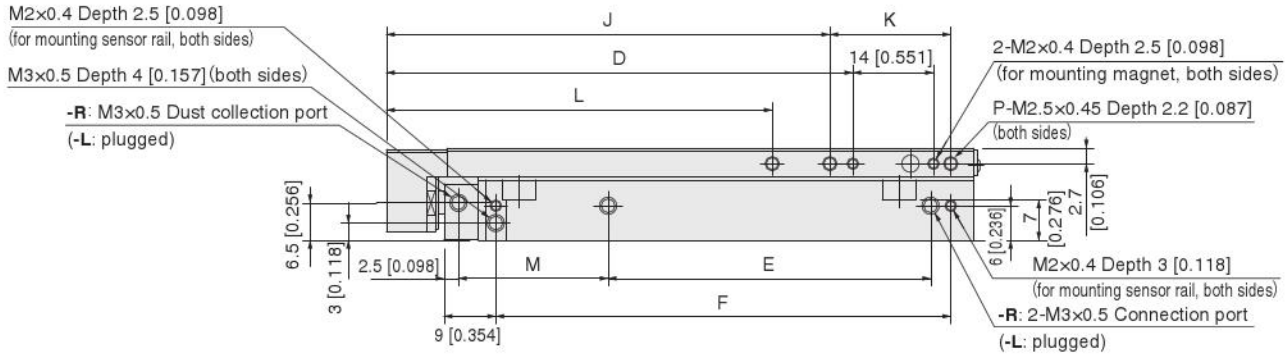

Locating pin: -P (P-MGA1)

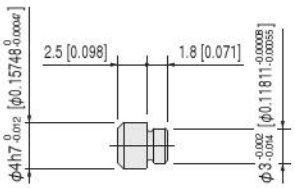

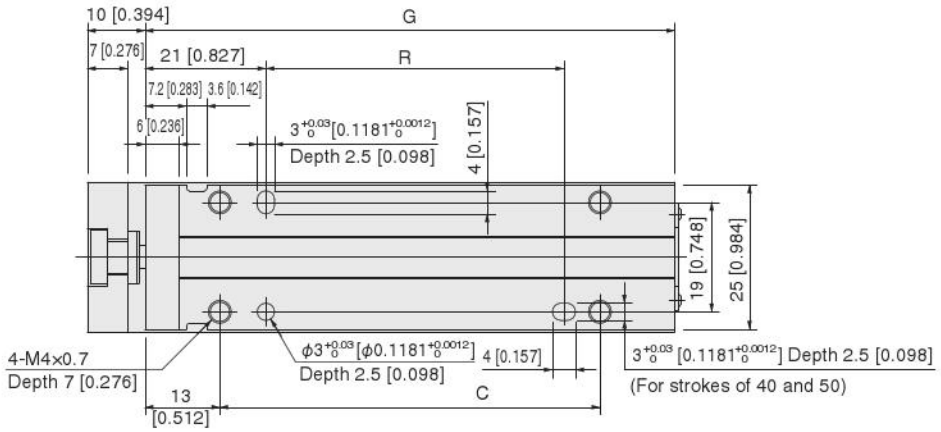

Stroke	A	B	C	D	E	F	G	H	I	J	K	L	M	N	P	R
5, 10	52 [2.047]	16 [0.630]	16 [0.630]	31 [1.220]	16 [0.630]	29 [1.142]	42 [1.654]	35 [1.378]	—	37 [1.457]	11 [0.433]	—	16 [0.630]	4	2	—
15, 20	62 [2.441]	26 [1.024]	26 [1.024]	41 [1.614]	26 [1.024]	39 [1.535]	52 [2.047]	45 [1.772]	—	47 [1.850]	11 [0.433]	—	16 [0.630]	4	2	—
25, 30	72 [2.835]	36 [1.417]	36 [1.417]	51 [2.008]	36 [1.417]	49 [1.929]	62 [2.441]	55 [2.165]	—	57 [2.244]	11 [0.433]	—	16 [0.630]	4	2	—
40, 50	102 [4.016]	33 [1.299]	66 [2.598]	81 [3.189]	56 [2.205]	79 [3.110]	92 [3.622]	85 [3.346]	66 [2.598]	77 [3.031]	21 [0.827]	67 [2.638]	26 [1.024]	6	3	50 [1.969]

● Cylinder with magnet and sensor rail CS-MGAS10
● Cylinder with shock absorber CS-MGA□10-SS□

Piping direction: -R

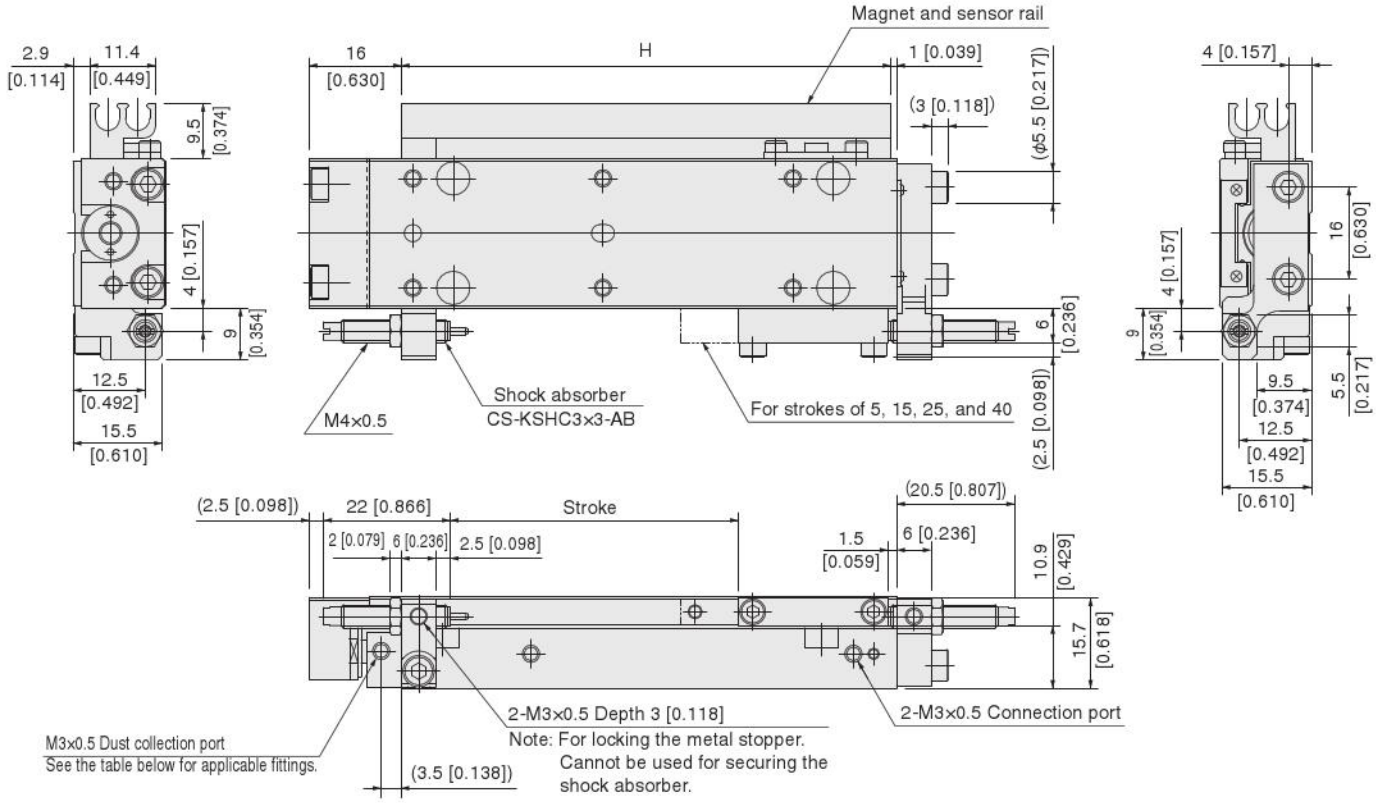

Piping direction: -L

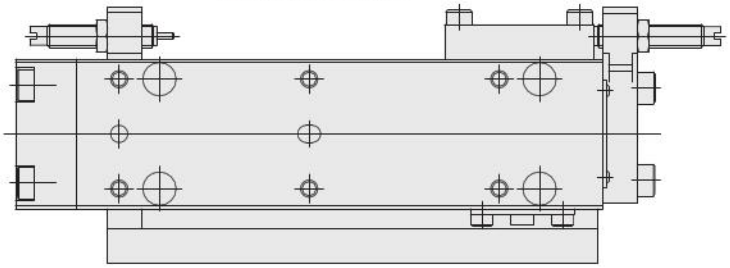

● Applicable fittings for dust collection port

Tube outer diameter mm	Quick fitting	TAC fitting
φ1.8	TS2-M3M, TSH2-M3M	BF2BU-M3
φ3	TS3-M3M	BF3BU-M3
φ4	—	BF4BU-M3

Locating pin: -P (P-MGA1)

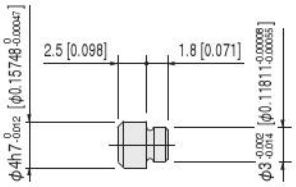

● Rear piping specifications

CS-MGAH10

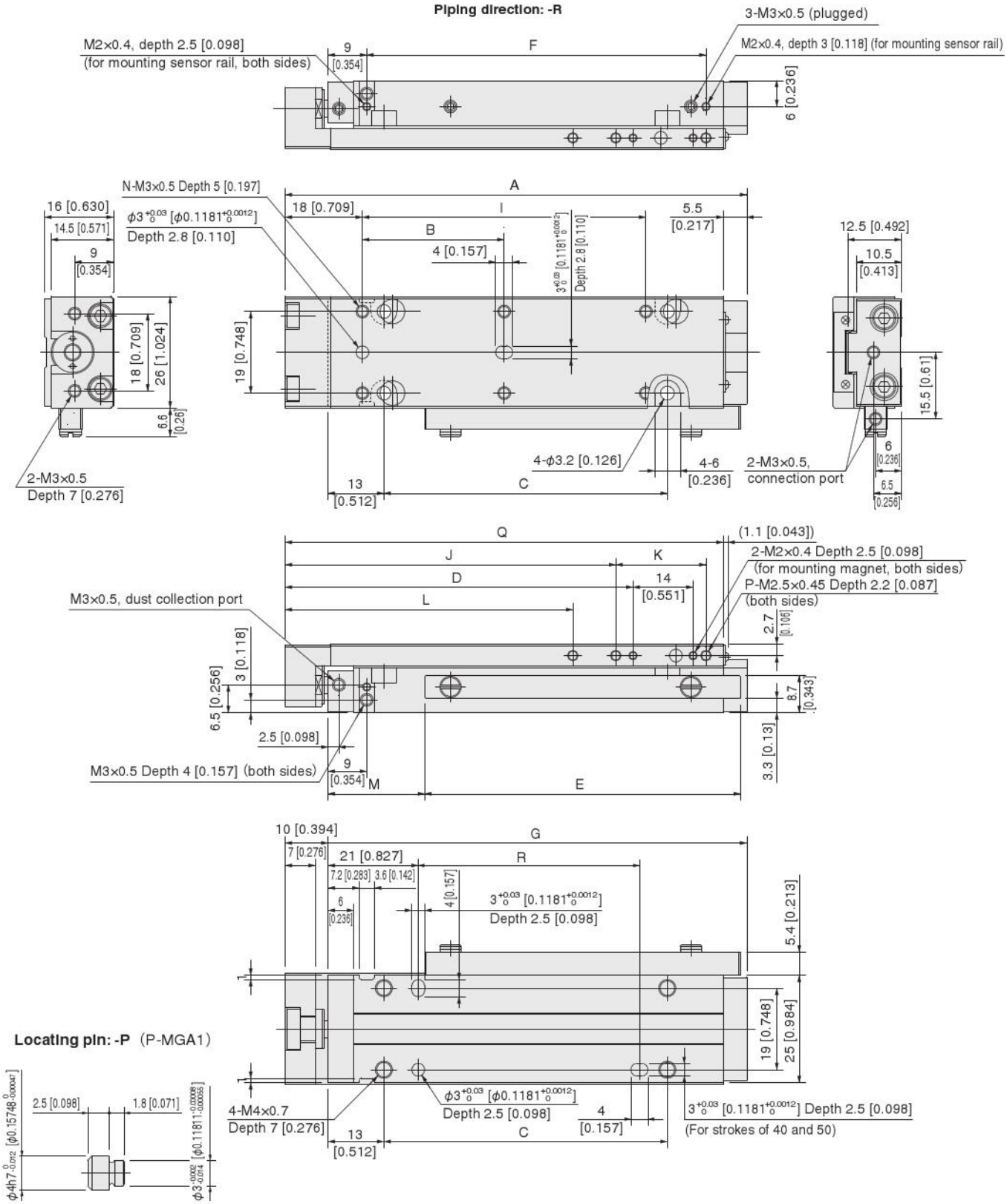

Stroke	A	B	C	D	E	F	G	H	I	J	K	L	M	N	P	Q	R
5, 10	57.5 [2.264]	16 [0.630]	16 [0.630]	31 [1.220]	33.5 [1.319]	29 [1.142]	47.5 [1.87]	35 [1.378]	—	37 [1.457]	11 [0.433]	—	12.5 [0.492]	4 [0.157]	2 [0.079]	52 [2.047]	—
15, 20	67.5 [2.657]	26 [1.024]	26 [1.024]	41 [1.614]	43.5 [1.713]	39 [1.535]	57.5 [2.264]	45 [1.772]	—	47 [1.850]	11 [0.433]	—	12.5 [0.492]	4 [0.157]	2 [0.079]	62 [2.441]	—
25, 30	77.5 [3.051]	36 [1.417]	36 [1.417]	51 [2.008]	53.5 [2.106]	49 [1.929]	67.5 [2.657]	55 [2.165]	—	57 [2.244]	11 [0.433]	—	12.5 [0.492]	4 [0.157]	2 [0.079]	72 [2.835]	—
40, 50	107.5 [4.232]	33 [1.299]	66 [2.598]	81 [3.189]	73.5 [2.894]	79 [3.110]	97.5 [3.839]	85 [3.346]	66 [2.598]	77 [3.031]	21 [0.827]	67 [2.638]	22.5 [0.886]	6 [0.236]	3 [0.118]	102 [4.016]	50 [1.969]

● **Rear piping specifications, cylinder with magnet and sensor rail CS-MGAHS10**

● **Rear piping specifications, cylinder with shock absorber CS-MGAH□10-SSF**

Piping direction: -R

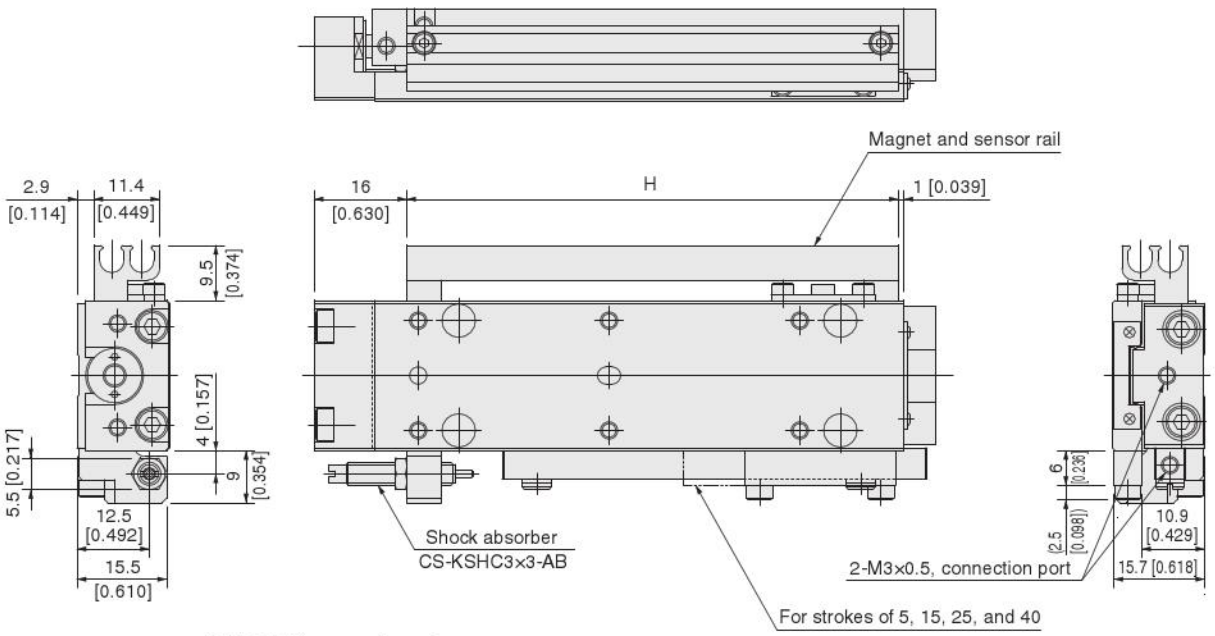

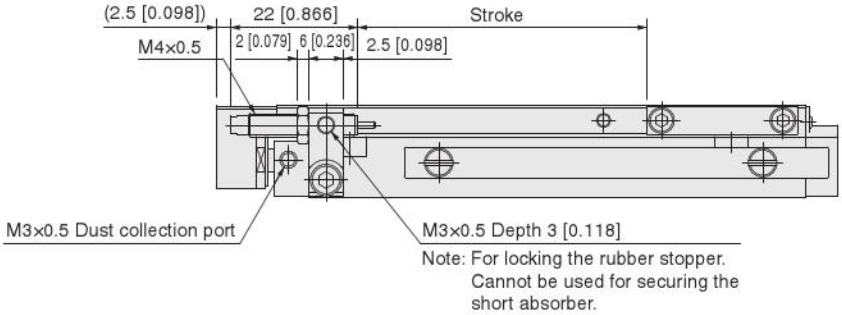

Piping direction: -L

Without options

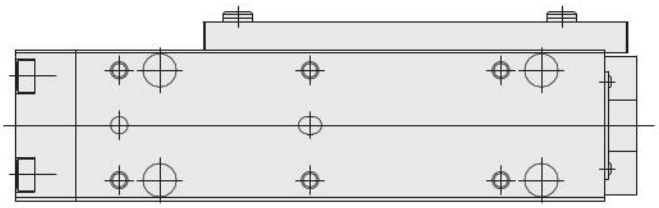

With sensor rail and shock absorber

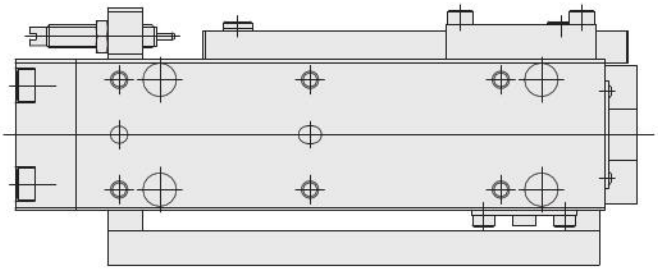

Locating pin: -P (P-MGA1)

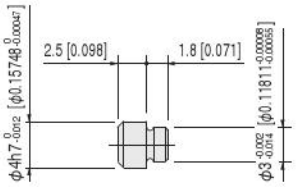

CS-MGA12

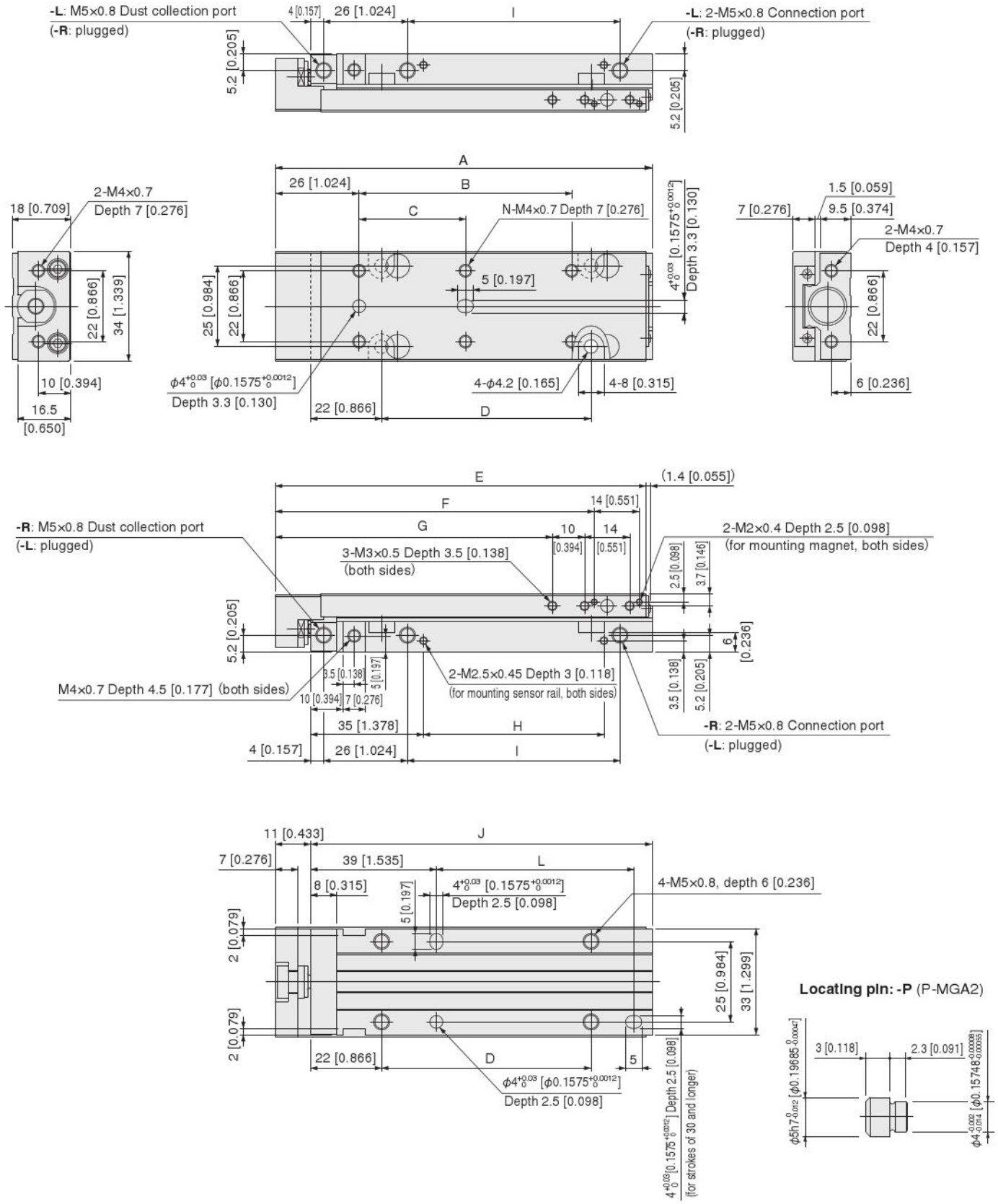

Stroke	A	B	C	D	E	F	G	H	I	J	K	L	N
10, 15, 20	77 [3.031]	—	26 [1.024]	25 [0.984]	75 [2.953]	59 [2.323]	46 [1.811]	16 [0.630]	26 [1.024]	66 [2.598]	45 [1.772]	—	4
30, 40	97 [3.819]	—	46 [1.811]	45 [1.772]	95 [3.740]	79 [3.110]	66 [2.598]	36 [1.417]	46 [1.811]	86 [3.386]	65 [2.559]	42 [1.654]	4
50, 60	117 [4.606]	66 [2.598]	33 [1.299]	65 [2.559]	115 [4.528]	99 [3.898]	86 [3.386]	56 [2.205]	66 [2.598]	106 [4.173]	85 [3.346]	62 [2.441]	6
70, 80	137 [5.394]	86 [3.386]	43 [1.693]	85 [3.346]	135 [5.315]	119 [4.685]	106 [4.173]	76 [2.992]	86 [3.386]	126 [4.961]	105 [4.134]	82 [3.228]	6

● **Cylinder with magnet and sensor rail CS-MGAS12**

● **Cylinder with shock absorber CS-MGA□12-SS□**

Piping direction: -R

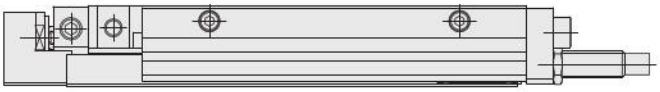

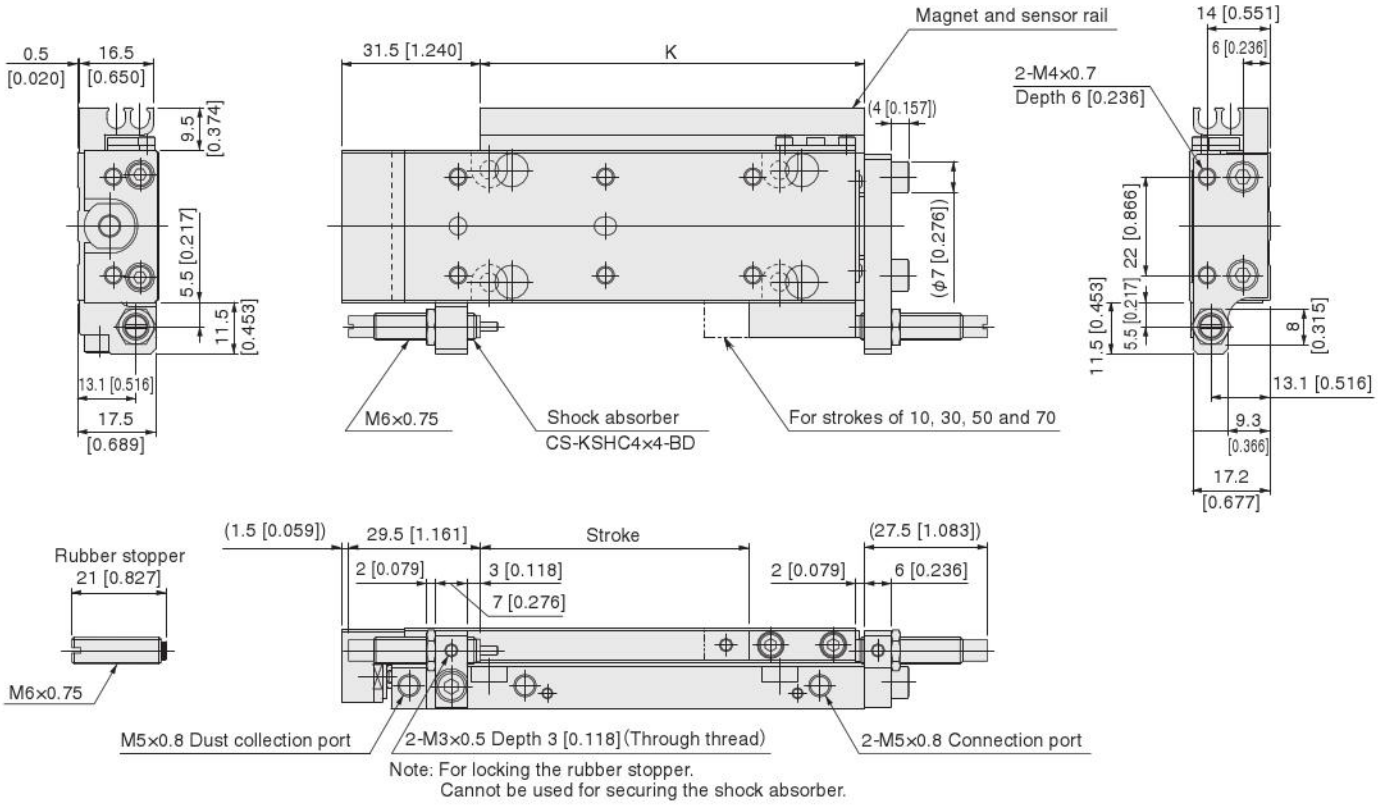

Piping direction: -L

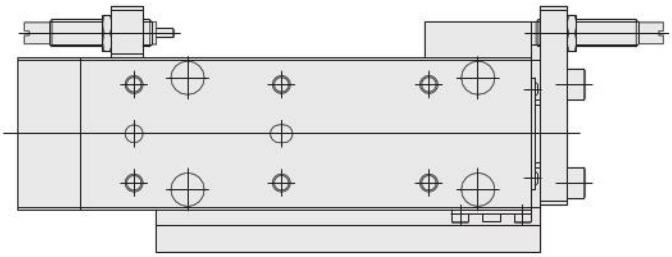

Locating pin: -P (P-MGA2)

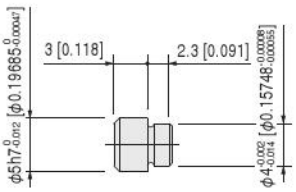

● Rear piping specifications

CS-MGAH12

Piping direction: -R

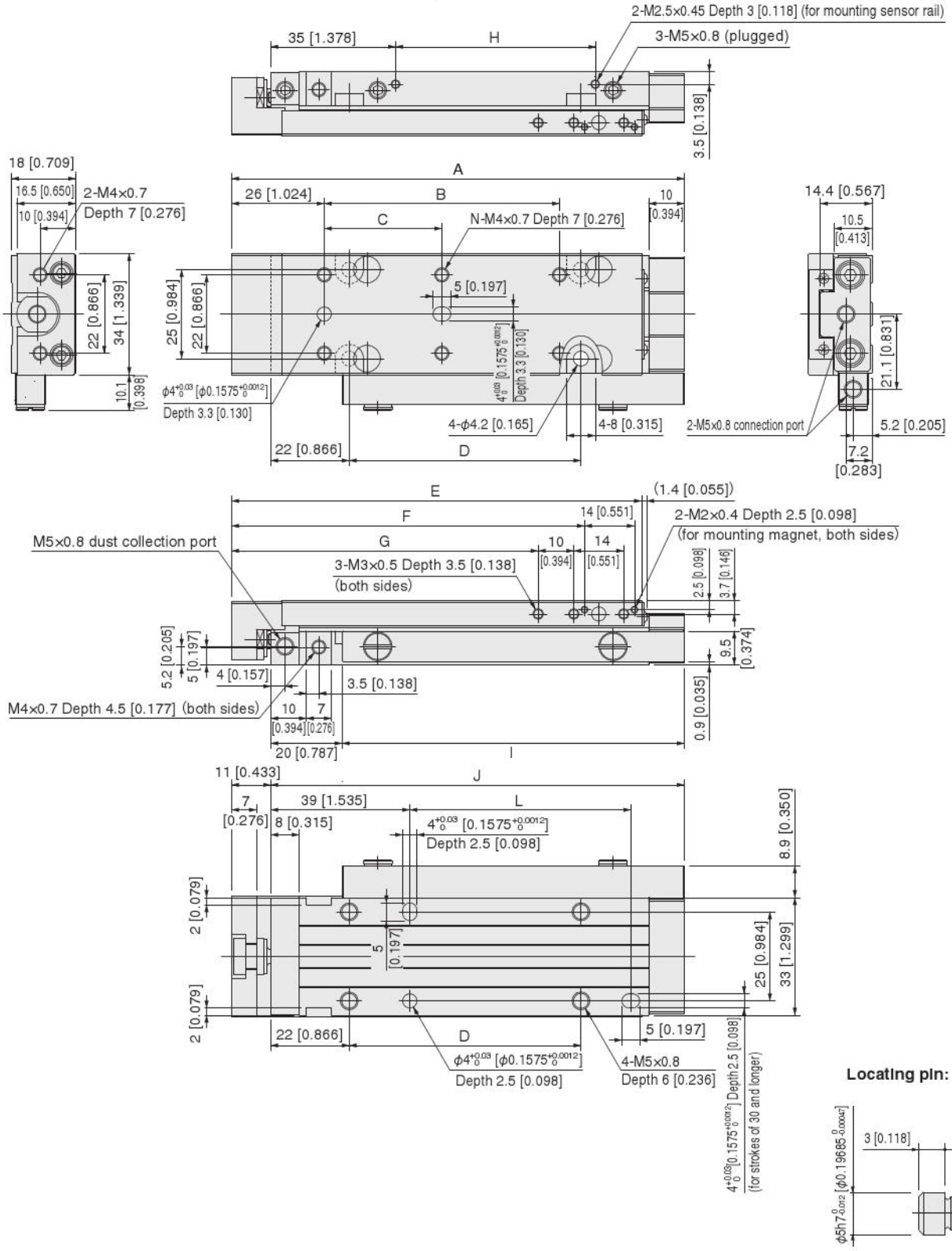

Stroke	A	B	C	D	E	F	G	H	I	J	K	L	N
10, 15, 20	87 [3.425]	—	26 [1.024]	25 [0.984]	67 [2.638]	51 [2.008]	38 [1.496]	16 [0.630]	26 [1.024]	76 [2.992]	45 [1.772]	—	4
30, 40	107 [4.213]	—	46 [1.811]	45 [1.772]	87 [3.425]	71 [2.795]	58 [2.283]	36 [1.417]	46 [1.811]	96 [3.780]	65 [2.559]	42 [1.654]	4
50, 60	127 [5.000]	66 [2.598]	33 [1.299]	65 [2.559]	107 [4.213]	91 [3.583]	78 [3.071]	56 [2.205]	66 [2.598]	116 [4.567]	85 [3.346]	62 [2.441]	6
70, 80	147 [5.787]	86 [3.386]	43 [1.693]	85 [3.346]	127 [5.000]	111 [4.370]	98 [3.858]	76 [2.992]	86 [3.386]	136 [5.354]	105 [4.134]	82 [3.228]	6

● **Rear piping specifications, cylinder with magnet and sensor rail CS-MGAHS12**

● **Rear piping specifications, cylinder with shock absorber CS-MGAH□12-SSF**

Piping direction: -R

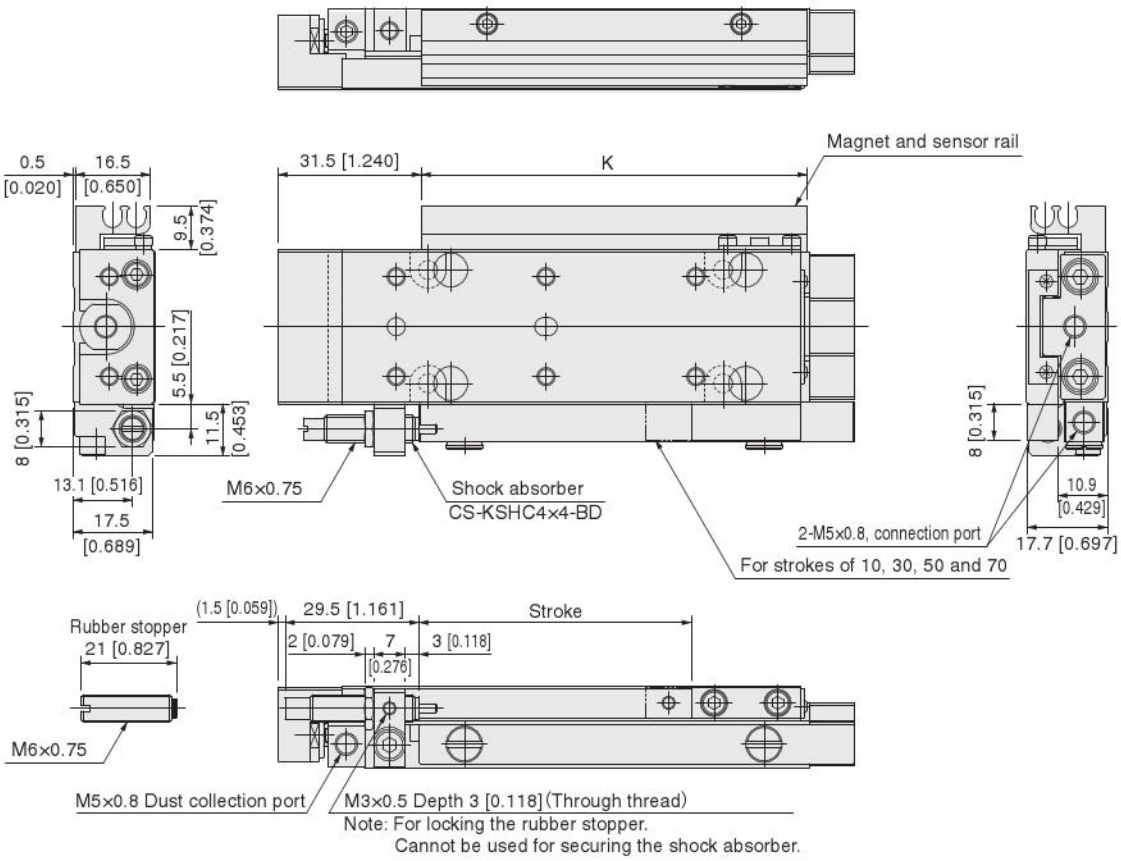

Piping direction: -L

Without options

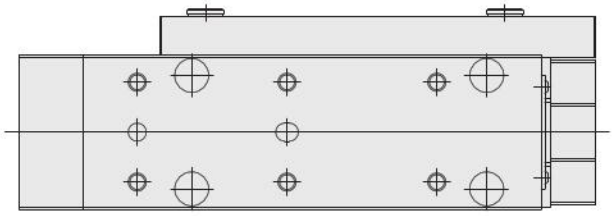

With sensor rail and shock absorber

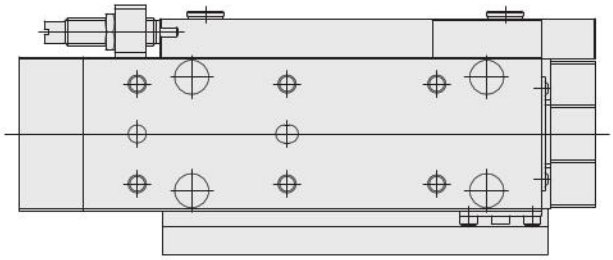

Locating pin: -P (P-MGA2)

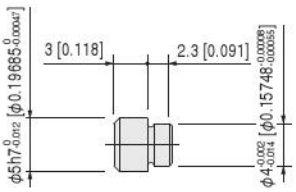

CS-MGA16

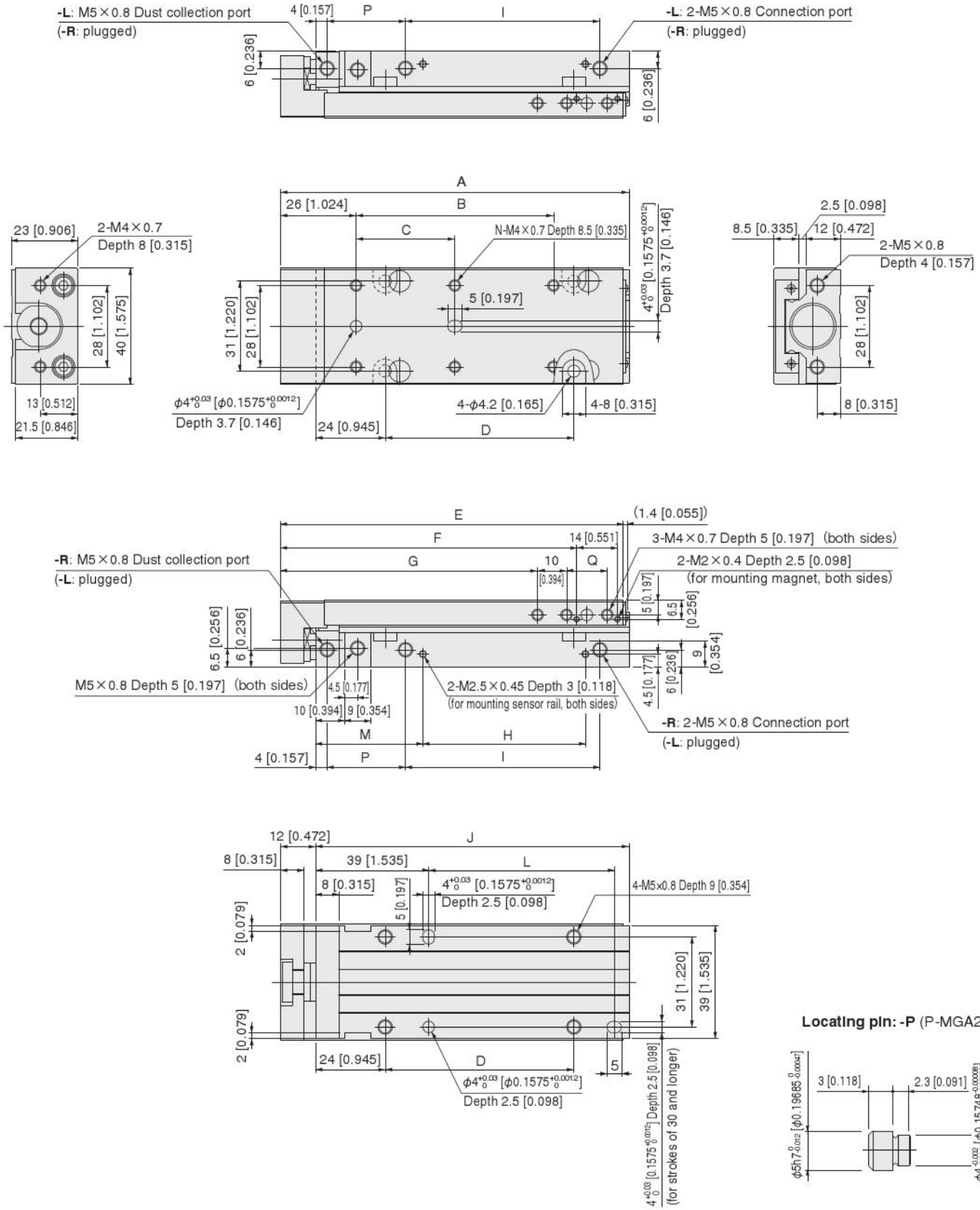

Stroke	A	B	C	D	E	F	G	H	I	J	K	L	M	N	P	Q	S
10, 15, 20	80 [3.150]	—	28 [1.102]	25 [0.984]	78 [3.071]	62 [2.441]	48.5 [1.909]	16 [0.630]	27 [1.063]	68 [2.677]	45 [1.772]	–	37 [1.457]	4	27 [1.063]	14 [0.551]	34.5 [1.358]
30, 40	100 [3.937]	—	48 [1.890]	45 [1.772]	98 [3.858]	82 [3.228]	68.5 [2.697]	36 [1.417]	47 [1.850]	88 [3.465]	65 [2.559]	44 [1.732]	37 [1.457]	4	27 [1.063]	14 [0.551]	34.5 [1.358]
50, 60	120 [4.724]	68 [2.677]	34 [1.339]	65 [2.559]	118 [4.646]	102 [4.016]	88.5 [3.484]	56 [2.205]	67 [2.638]	108 [4.252]	85 [3.346]	64 [2.520]	37 [1.457]	6	27 [1.063]	14 [0.551]	34.5 [1.358]
70, 80	140 [5.512]	88 [3.465]	44 [1.732]	85 [3.346]	138 [5.433]	122 [4.803]	108.5 [4.272]	76 [2.992]	87 [3.425]	128 [5.039]	105 [4.134]	84 [3.307]	37 [1.457]	6	27 [1.063]	14 [0.551]	34.5 [1.358]
90, 100	180 [7.087]	128 [5.039]	64 [2.520]	125 [4.921]	178 [7.008]	162 [6.378]	128.5 [5.059]	121 [4.764]	107 [4.213]	168 [6.614]	150 [5.906]	124 [4.882]	32 [1.260]	6	47 [1.850]	34 [1.339]	29.5 [1.161]

● **Cylinder with magnet and sensor rail CS-MGAS16**

● **Cylinder with shock absorber CS-MGA□16-SS□**

Piping direction: -R

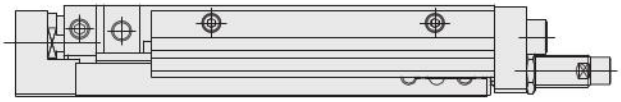

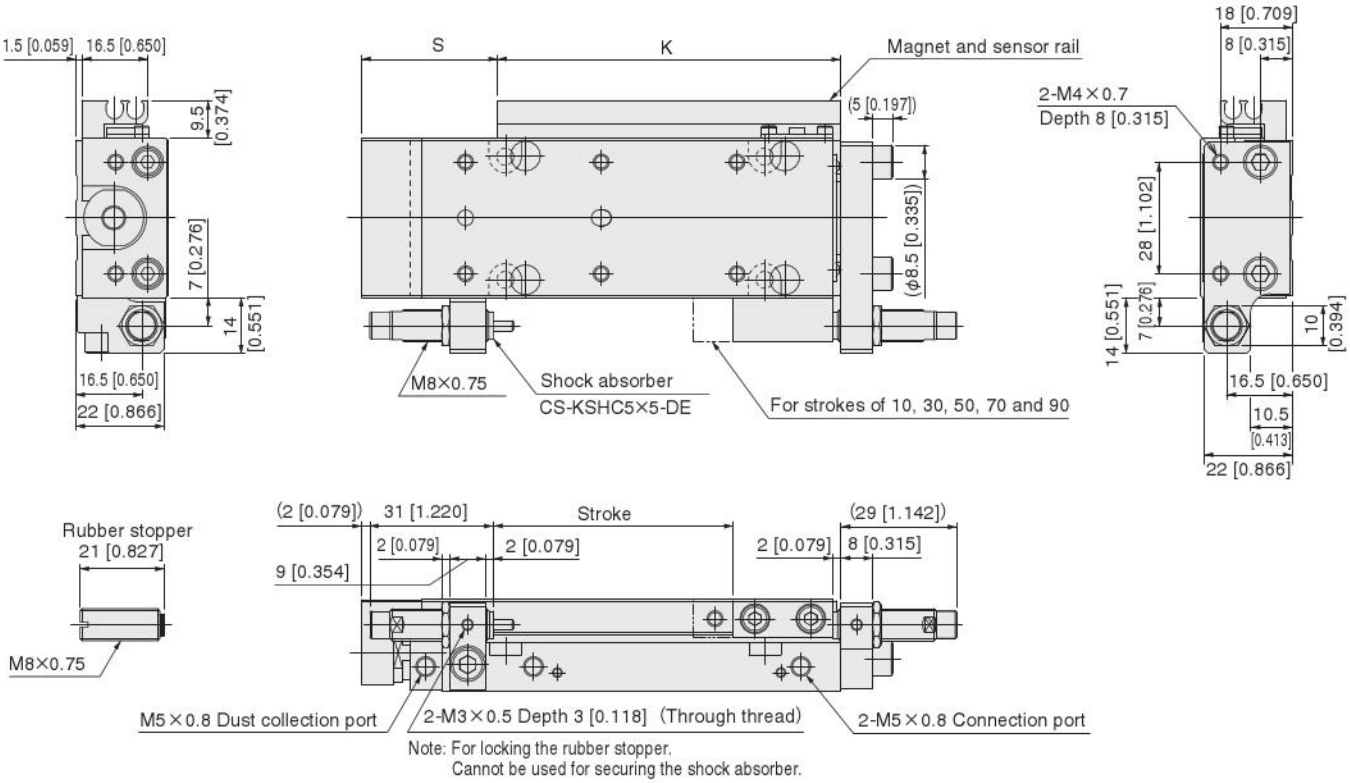

Note: For locking the rubber stopper.
Cannot be used for securing the shock absorber.

Piping direction: -L

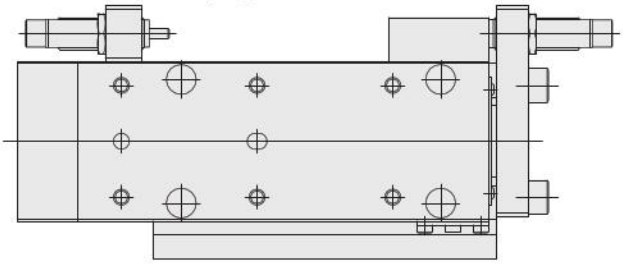

Locating pin: -P (P-MGA2)

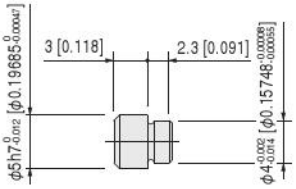

● Rear piping specifications

CS-MGAH16

Piping direction: -R

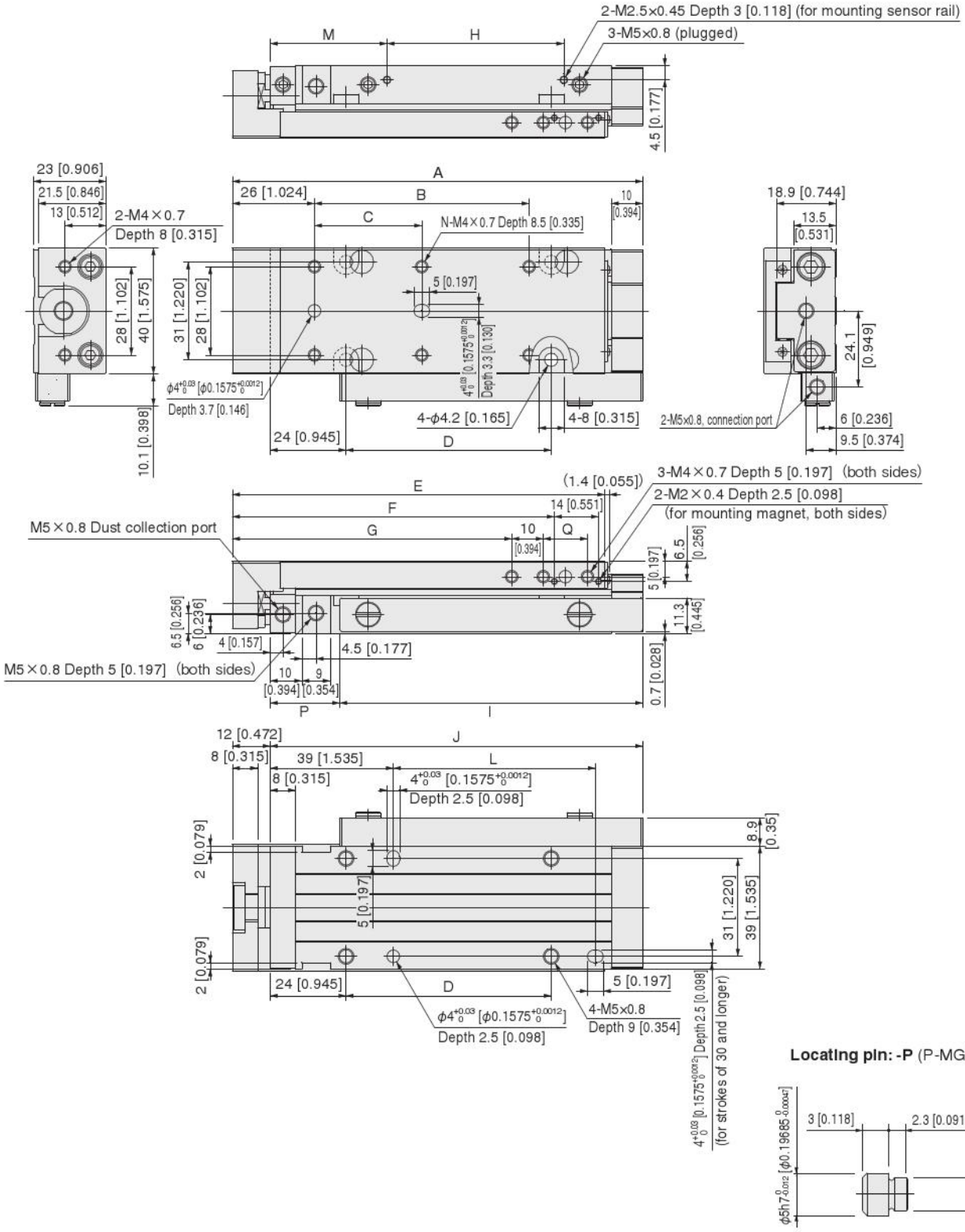

Stroke	A	B	C	D	E	F	G	H	I	J	K	L	M	N	P	Q	S
10, 15, 20	90 [3.543]	—	28 [1.102]	25 [0.984]	78 [3.071]	62 [2.441]	48.5 [1.909]	16 [0.630]	56 [2.205]	78 [3.071]	45 [1.772]	—	37 [1.457]	4	22 [0.866]	14 [0.551]	34.5 [1.358]
30, 40	110 [4.331]	—	48 [1.890]	45 [1.772]	98 [3.858]	82 [3.228]	68.5 [2.697]	36 [1.417]	76 [2.992]	98 [3.858]	65 [2.559]	44 [1.732]	37 [1.457]	4	22 [0.866]	14 [0.551]	34.5 [1.358]
50, 60	130 [5.118]	68 [2.677]	34 [1.339]	65 [2.559]	118 [4.646]	102 [4.016]	88.5 [3.484]	56 [2.205]	96 [3.780]	118 [4.646]	85 [3.346]	64 [2.520]	37 [1.457]	6	22 [0.866]	14 [0.551]	34.5 [1.358]
70, 80	150 [5.906]	88 [3.465]	44 [1.732]	85 [3.346]	138 [5.433]	122 [4.803]	108.5 [4.272]	76 [2.992]	116 [4.567]	138 [5.433]	105 [4.134]	84 [3.307]	37 [1.457]	6	22 [0.866]	14 [0.551]	34.5 [1.358]
90, 100	190 [7.480]	128 [5.039]	64 [2.520]	125 [4.921]	178 [7.008]	162 [6.378]	128.5 [5.059]	121 [4.764]	136 [5.354]	178 [7.008]	150 [5.906]	124 [4.882]	32 [1.260]	6	42 [1.654]	34 [1.339]	29.5 [1.161]

● **Rear piping specifications, cylinder with magnet and sensor rail CS-MGAHS16**

● **Rear piping specifications, cylinder with shock absorber CS-MGAH□16-SSF**

Piping direction: -R

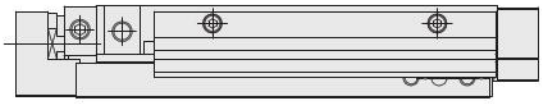

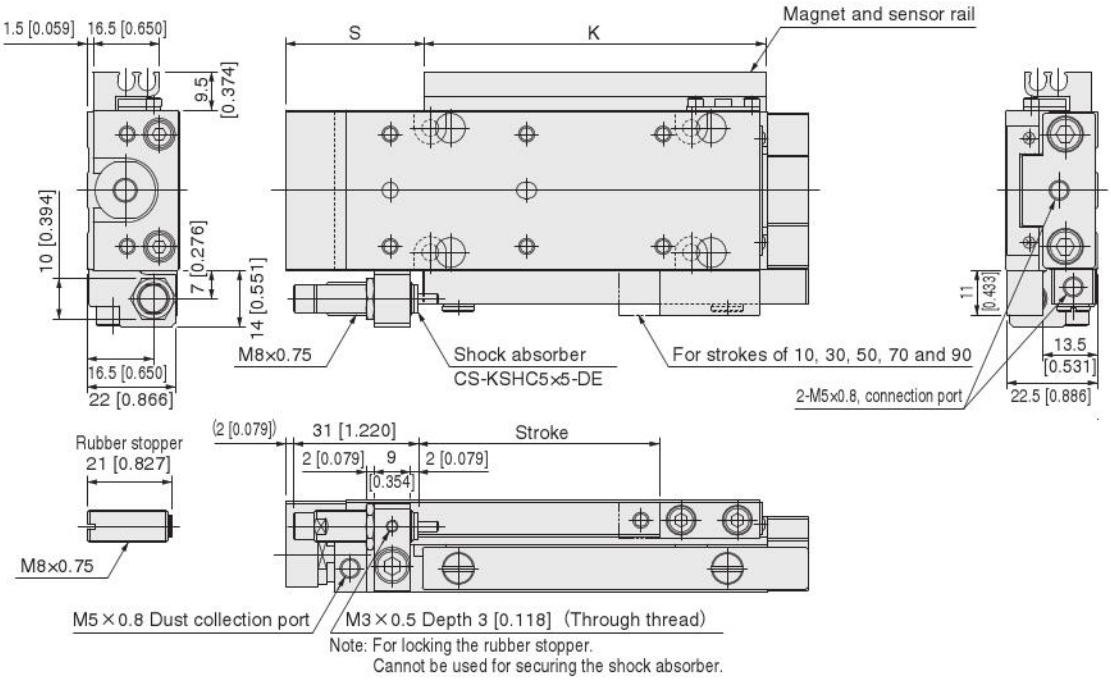

Piping direction: -L

Without options

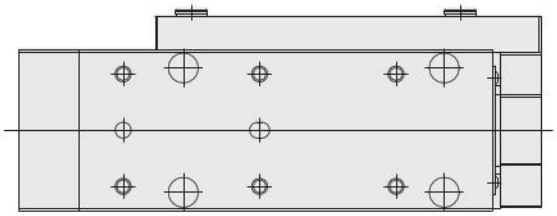

With sensor rail and shock absorber

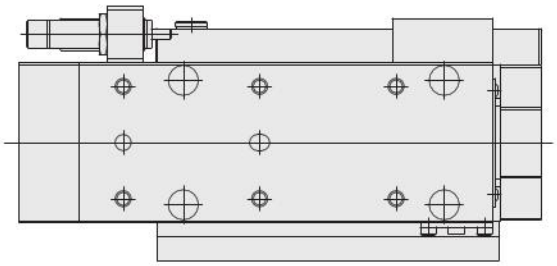

Locating pin: -P (P-MGA2)

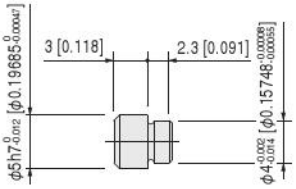

CS-MGA20

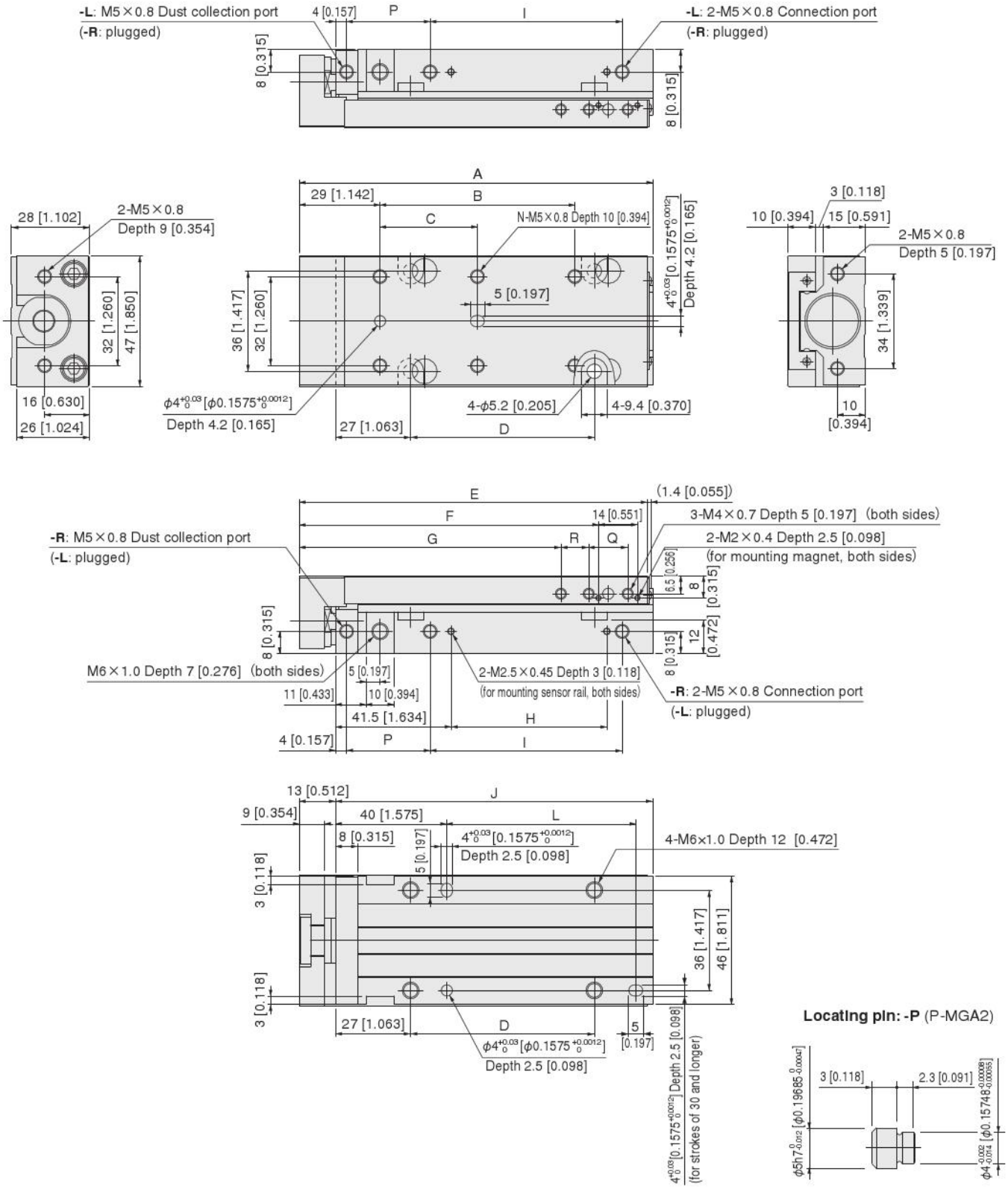

Stroke	A	B	C	D	E	F	G	H	I	J	K	L	M	N	P	Q	R	S
10, 15, 20	87 [3.425]	—	30 [1.181]	26 [1.024]	85 [3.346]	67.5 [2.657]	54 [2.126]	16 [0.630]	29 [1.142]	74 [2.913]	45 [1.772]	—	41.5 [1.634]	4	30 [1.181]	14 [0.551]	10 [0.394]	40 [1.575]
30, 40	107 [4.213]	—	50 [1.969]	46 [1.811]	105 [4.134]	87.5 [3.445]	74 [2.913]	36 [1.417]	49 [1.929]	94 [3.701]	65 [2.559]	45 [1.772]	41.5 [1.634]	4	30 [1.181]	14 [0.551]	10 [0.394]	40 [1.575]
50, 60	127 [5.000]	70 [2.756]	35 [1.378]	66 [2.598]	125 [4.921]	107.5 [4.232]	94 [3.701]	56 [2.205]	69 [2.717]	114 [4.488]	85 [3.346]	65 [2.559]	41.5 [1.634]	6	30 [1.181]	14 [0.551]	10 [0.394]	40 [1.575]
70, 80	147 [5.787]	90 [3.543]	45 [1.772]	86 [3.386]	145 [5.709]	127.5 [5.020]	114 [4.488]	76 [2.992]	89 [3.504]	134 [5.276]	105 [4.134]	85 [3.346]	41.5 [1.634]	6	30 [1.181]	14 [0.551]	10 [0.394]	40 [1.575]
90, 100, 120, 125	212 [8.346]	150 [5.906]	75 [2.953]	151 [5.945]	210 [8.268]	192.5 [7.579]	144 [5.669]	121 [4.764]	134 [5.276]	199 [7.835]	150 [5.906]	150 [5.906]	61.5 [2.421]	6	50 [1.969]	34 [1.339]	25 [0.984]	60 [2.362]

● **Cylinder with magnet and sensor rail CS-MGAS20**

● **Cylinder with shock absorber CS-MGA□20-SS□**

Piping direction: -R

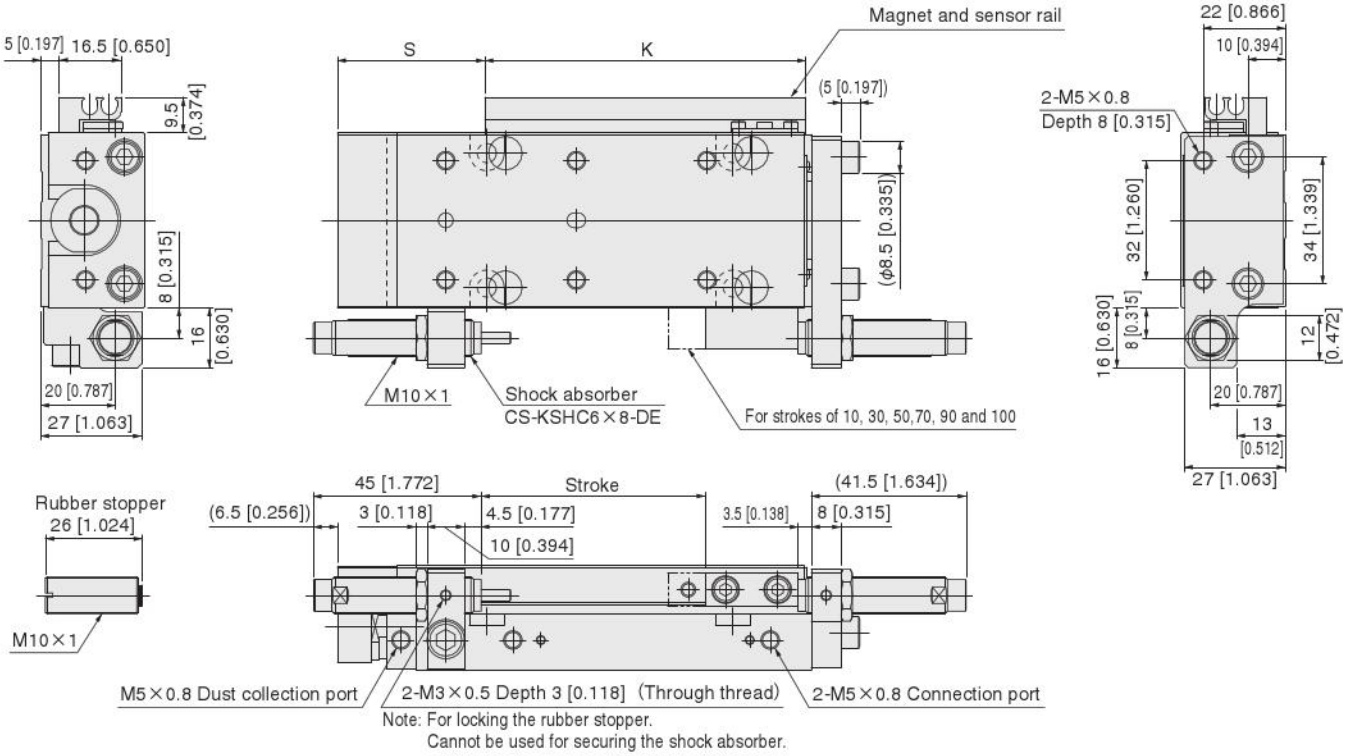

Piping direction: -L

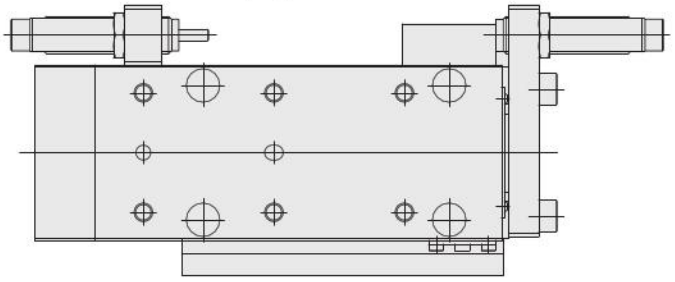

Locating pin: -P (P-MGA2)

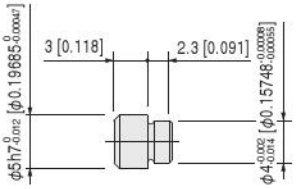

● Rear piping specifications

CS-MGAH20

Piping direction: -R

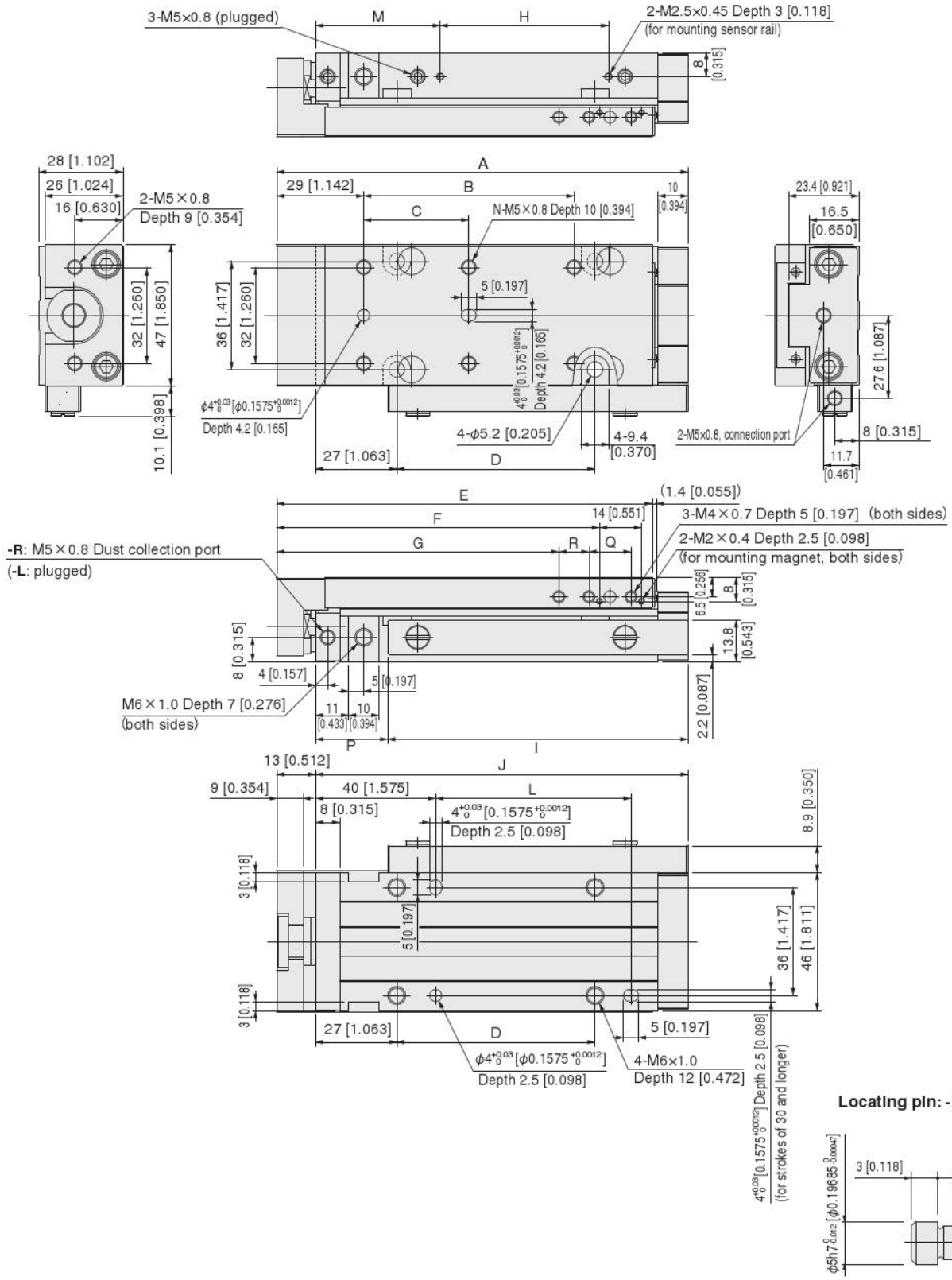

Stroke	A	B	C	D	E	F	G	H	I	J	K	L	M	N	P	Q	R	S
10, 15, 20	97 [3.819]	—	30 [1.181]	26 [1.024]	85 [3.346]	67.5 [2.657]	54 [2.126]	16 [0.630]	60 [2.362]	84 [3.307]	45 [1.772]	—	41.5 [1.634]	4	24 [0.945]	14 [0.551]	10 [0.394]	40 [1.575]
30, 40	117 [4.606]	—	50 [1.969]	46 [1.811]	105 [4.134]	87.5 [3.445]	74 [2.913]	36 [1.417]	80 [3.150]	104 [4.094]	65 [2.559]	45 [1.772]	41.5 [1.634]	4	24 [0.945]	14 [0.551]	10 [0.394]	40 [1.575]
50, 60	137 [5.394]	70 [2.756]	35 [1.378]	66 [2.598]	125 [4.921]	107.5 [4.232]	94 [3.701]	56 [2.205]	100 [3.937]	124 [4.882]	85 [3.346]	65 [2.559]	41.5 [1.634]	6	24 [0.945]	14 [0.551]	10 [0.394]	40 [1.575]
70, 80	157 [6.181]	90 [3.543]	45 [1.772]	86 [3.386]	145 [5.709]	127.5 [5.020]	114 [4.488]	76 [2.992]	120 [4.724]	144 [5.669]	105 [4.134]	85 [3.346]	41.5 [1.634]	6	24 [0.945]	14 [0.551]	10 [0.394]	40 [1.575]
90, 100, 120, 125	222 [8.740]	150 [5.906]	75 [2.953]	151 [5.945]	210 [8.268]	192.5 [7.579]	144 [5.669]	121 [4.764]	165 [6.496]	209 [8.228]	150 [5.906]	150 [5.906]	61.5 [2.421]	6	44 [1.732]	34 [1.339]	25 [0.984]	60 [2.362]

● **Rear piping specifications, cylinder with magnet and sensor rail CS-MGAHS20**

● **Rear piping specifications, cylinder with shock absorber CS-MGAH□20-SSF**

Piping direction: -R

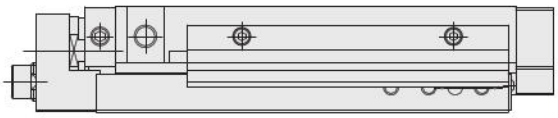

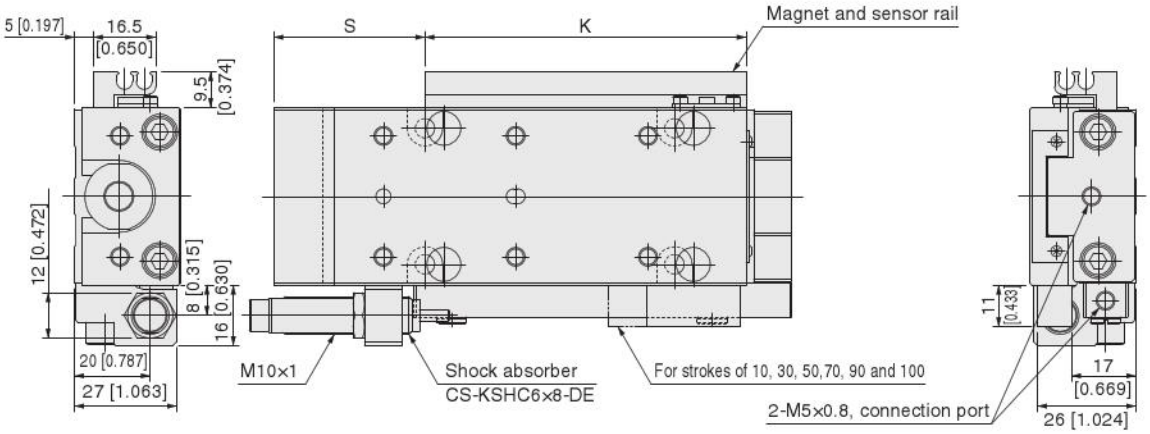

Piping direction: -L

Without options

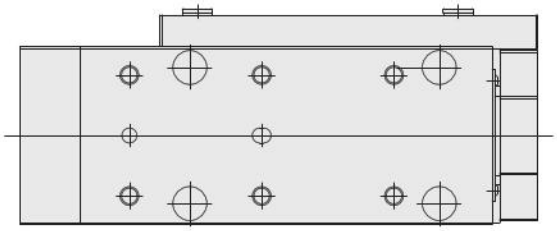

With sensor rail and shock absorber

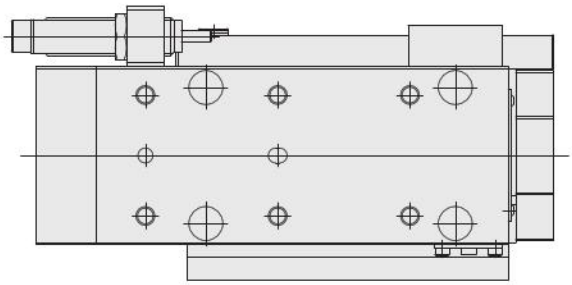

Locating pin: -P (P-MGA2)

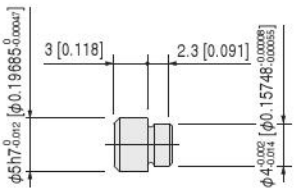

Evaluations of Cleanliness

There is currently no standard in JIS or elsewhere for methods of evaluating cleanliness for pneumatic equipment in the cleanroom specification. Koganei has therefore independently established our in-house measurement methods, to conduct the cleanliness evaluation.

The number of particles in the Mini Guide Slider Cleanroom Specification is measured as shown in the method below.

1. Measurement sample

① CS-MGA10×10 (no load) ② CS-MGA20×60-SS2 (load: 2.5 kg [5.5 lbf.])

2. Measurement conditions

2-1 Test circuit : with suction from dust collection port

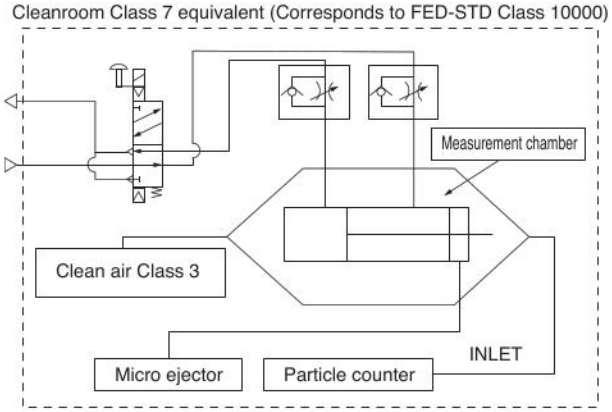

2-2 Operating conditions of the tested cylinder
Operating frequency: CS-MGA10/1 Hz, CS-MGA20/0.5 Hz
Average speed: 300 mm/s [12 in./sec.]
Applied pressure: 0.5 MPa [73 psi.]
Suction condition: Microejector ME05, Primary side 0.5 MPa [73 psi.] applied, Tube ϕ 6 [0.236 in.]
Mounting direction: CS-MGA10/Vertical, CS-MGA20/Horizontal
Chamber volume: 8.3 ℓ [0.293 ft.^{3}]

3. Particle counter

Manufacturer/model: RION/KM20
Suction flow rate: 28.3 ℓ /min [1 ft.^{3}/min.]
Particle diameter: 0.1 μm, 0.2 μm, 0.3 μm, 0.5 μm, 0.7 μm, 1.0 μm

4. Measurement method

4-1 Confirmation of number of particles in the measurement system
Under the conditions in the above 1 and 2, using a particle counter to measure the sample for nine minutes without operating the measurement sample, and confirmed the measured number of particles is one piece or less.

4-2 Measurement under operation
Under the conditions in the above 1 and 2, operating the measurement sample for 36 minutes, and measured the total values in the latter half of 18 minutes test.

4-3 Reconfirmation
Performed the measurement in 4-1 again, to reconfirm the number of particles in the measurement system.

4-4 Measurement value conversion
Total value of last 18 minutes of 4-2 converted into number per 10 cylinder operations.

5. Measurement results Note

● With suction from dust collection port

① CS-MGA10×10

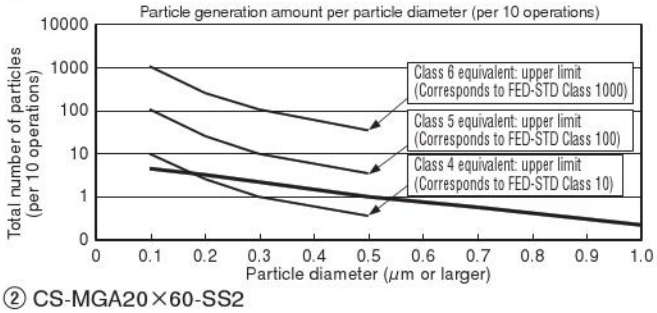

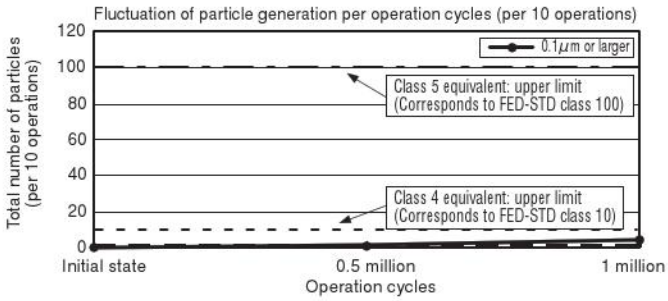

② CS-MGA20×60-SS2

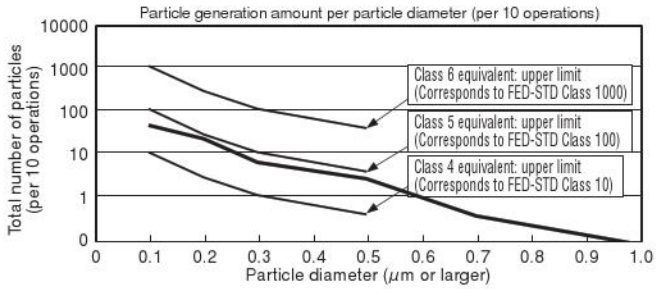

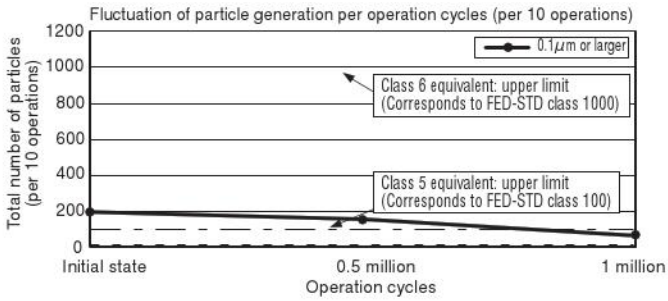

Note: The graphs by particle diameter are based on measurements after 1 million operations of products.

SENSOR SWITCHES

Solid State Type, Reed Switch Type

CE

* For details of linear magnetic sensor controllers, see p.178.

Specifications

● Solid State Type

Item \ Model	ZE135□	ZE155□	ZE175□	ZE235□	ZE255□	ZE275□
Wiring type	2-lead wire	3-lead wire NPN ouput	3-lead wire PNP ouput	2-lead wire	3-lead wire NPN ouput	3-lead wire PNP ouput
Lead wire direction	Horizontal			Vertical		
Power supply voltage	—	DC4.5～28V		—	DC4.5～28V	
Load voltage	DC10～28V	DC4.5～28V		DC10～28V	DC4.5～28V	
Load current	4~20 mA at 25°C [77°F], and 10 mA at 60°C [140°F].	50 mA MAX.		4~20 mA at 25°C [77°F], and 10 mA at 60°C [140°F].	50 mA MAX.	
Consumption current	—	8 mA MAX. (DC24V)	10 mA MAX. (DC24V)	—	8 mA MAX. (DC24V)	10 mA MAX. (DC24V)
Internal voltage drop Note 1	4V MAX.	0.5V MAX. (10V or less at 20 mA)		4V MAX.	0.5V MAX. (10V or less at 20 mA)	
Leakage current	0.7 mA MAX. (DC24V, 25°C [77°F])	50 μA MAX. (DC24V)		0.7 mA MAX. (DC24V, 25°C [77°F])	50 μA MAX. (DC24V)	
Response time	1 ms MAX.					
Insulation resistance	100 MΩ MIN. (at DC500V Megger, between case and lead wire terminal)					
Dielectric strength	AC500V (50/60 Hz) in 1 minute (between case and lead wire terminal)					
Shock resistance Note 2	294.2 m/s² [30.0 G] (non-repeated shock)					
Vibration resistance Note 2	88.3 m/s² [9.0 G] (total amplitude 1.5 mm [0.06 in.], 10～55 Hz)					
Environmental protection	IP67(IEC standard), JIS C0920 (water-proof type)					
Operation indicator	When ON: Red LED indicator lights up					
Lead wire Note 3	PCCV 0.2SQ × 2-lead (brown and blue) × ℓ	PCCV 0.15SQ × 3-lead (brown, blue, and black) × ℓ		PCCV 0.2SQ × 2-lead (brown and blue) × ℓ	PCCV 0.15SQ × 3-lead (brown, blue, and black) × ℓ	
Ambient temperature	0 ～ 60°C [32～140°F]					
Storage temperature range	−10 ～ 70°C [14～158°F]					
Mass	15 g [0.53 oz.] (for lead wire length A: 1000 mm [39 in.]), 35 g [1.23 oz.] (for lead wire length B: 3000 mm [118 in.]), 15 g [0.53 oz.] (for lead wire length 300 mm [11.8 in.] with M8 connector),					

Notes: 1. The internal voltage drop depends on load current.
2. Measured by Koganei test standard.
3. Lead wire length ℓ : A; 1000 mm [39 in.], B; 3000 m [118 in.], G; 300 mm[11.8 in.] with M8 connector only for ZE175□ and ZE275□ .

※This product is not resistant to lightning surge of the EMC standard (EN61000-6-2 • EN60947-5-2).Prepare protection measures for lightning surge in the system.

● Reed Switch Type

Item \ Model	ZE101□		ZE102□		ZE201□		ZE202□	
Wiring type	2-lead wire							
Lead wire direction	Horizontal				Vertical			
Load voltage	DC5～28V	AC85～115V (r.m.s)	DC10～28V	AC85～115V (r.m.s)	DC5～28V	AC85～115V (r.m.s)	DC10～28V	AC85～115V (r.m.s)
Load current	40 mA MAX.	20 mA MAX.	5～40 mA	5～20 mA	40 mA MAX.	20 mA MAX.	5～40 mA	5～20 mA
Internal voltage drop Note 1	0.1V MAX. (at 40 mA load current)		3.0V MAX.		0.1V MAX. (at 40 mA load current)		3.0V MAX.	
Leakage current	0 mA							
Response time	1 ms MAX.							
Insulation resistance	100 MΩ MIN. (at DC500V Megger, between case and lead wire terminal)							
Dielectric strength	AC1500V (50/60 Hz) in 1 minute (between case and lead wire terminal)							
Shock resistance Note 2	294 m/s² [30.0 G] (non-repeated shock)							
Vibration resistance Note 2	88.3 m/s² [9.0 G] (total amplitude 1.5 mm [0.06 in.], 10～55 Hz), Resonance frequency 2750 ±250 Hz							
Environmental protection	IP67(IEC standard), JIS C0920 (water-proof type)							
Operation indicator	None		When ON: Red LED indicator lights up		None		When ON: Red LED indicator lights up	
Lead wire Note 3	PCCV 0.2SQ × 2-lead (brown and blue) × ℓ							
Ambient temperature	0～60°C [32～140°F]							
Storage temperature range	−10～70°C [14～158°F]							
Contact protection	Required (See Contact Protection on p.168)							
Mass	15 g [0.53 oz.] (for lead wire length A: 1000 mm [39 in.]), 35 g [1.23 oz.] (for lead wire length B: 3000 mm [118 in.])							

Notes: 1. The internal voltage drop depends on load current.
2. Measured by Koganei test standard.
3. Lead wire length ℓ : A; 1000 mm [39 in.], B; 3000 mm [118 in.]

Solid State Type and Reed Switch Type Sensor Switch Order Codes

□ - MGAS

Lead wire length
A : 1000 mm [39 in.]
B : 3000 mm [118 in.]
G : 300 mm [11.8 in.] with M8 connector, only for **ZE175** and **ZE275**

Sensor switch

ZE135	Solid state type	2-lead wire	with indicator lamp	DC10 ~ 28V	Horizontal lead wire
ZE155	Solid state type	3-lead wire NPN output	with indicator lamp	DC4.5 ~ 28V	Horizontal lead wire
ZE175	Solid state type	3-lead wire PNP output	with indicator lamp	DC4.5 ~ 28V	Horizontal lead wire
ZE235	Solid state type	2-lead wire	with indicator lamp	DC10 ~ 28V	Vertical lead wire
ZE255	Solid state type	3-lead wire NPN output	with indicator lamp	DC4.5 ~ 28V	Vertical lead wire
ZE275	Solid state type	3-lead wire PNP output	with indicator lamp	DC4.5 ~ 28V	Vertical lead wire
ZE101	Reed switch type		without indicator lamp	DC5 ~ 28V AC85 ~ 115V	Horizontal lead wire
ZE102	Reed switch type		with indicator lamp	DC10 ~ 28V AC85 ~ 115V	Horizontal lead wire
ZE201	Reed switch type		without indicator lamp	DC5 ~ 28V AC85 ~ 115V	Vertical lead wire
ZE202	Reed switch type		with indicator lamp	DC10 ~ 28V AC85 ~ 115V	Vertical lead wire

Internal Circuit Diagrams of Solid State Type and Reed Switch Type Sensor Switches

● Solid state type

● ZE135□, ZE235□

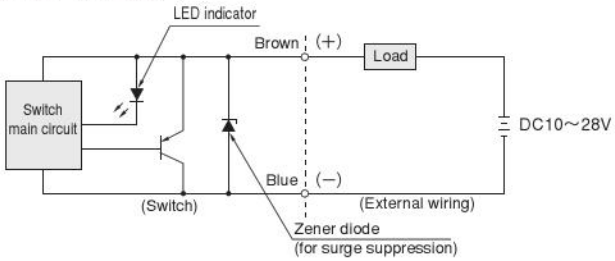

● ZE155□, ZE255□

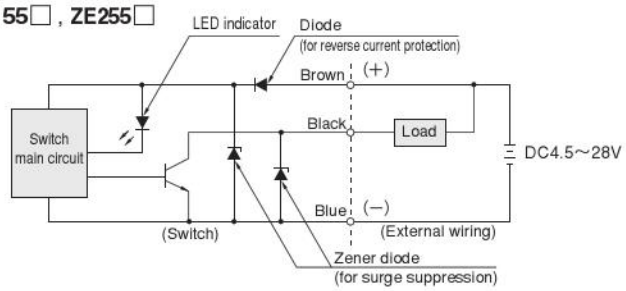

● ZE175□, ZE275□

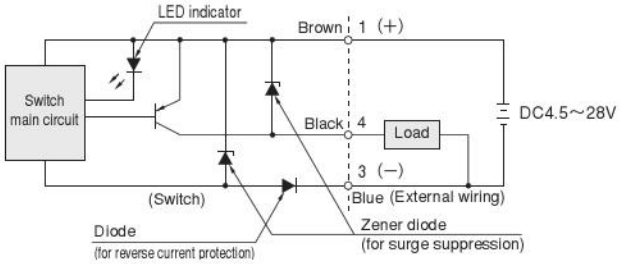

● Reed switch type

● ZE101□, ZE201□ **● ZE102□, ZE202□**

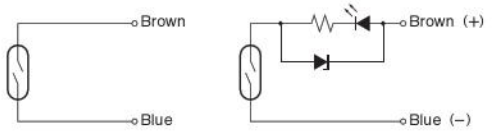

Dimensions of Solid State Type and Reed Switch Type Sensor Switches mm [in.]

● Horizontal Lead Wire

● Solid state type (ZE135□, ZE155□, ZE175□)

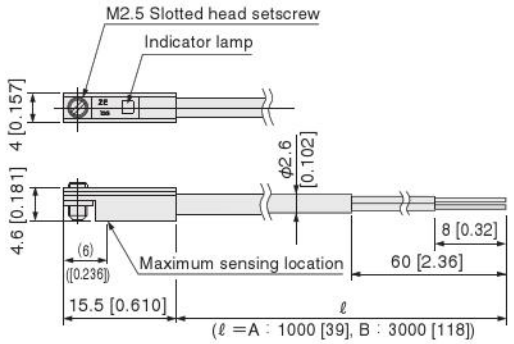

● Reed switch type (ZE101□, ZE102□)

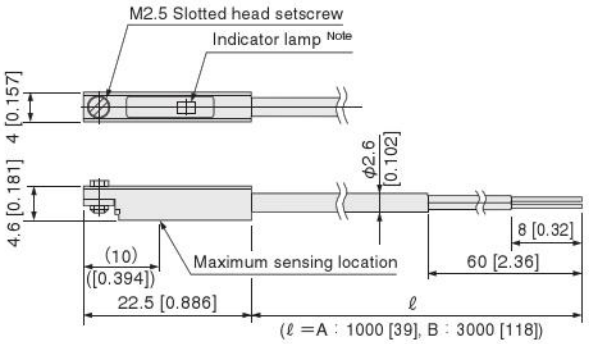

Note: Not available with **ZE101**□.

● Solid state type (ZE175G)

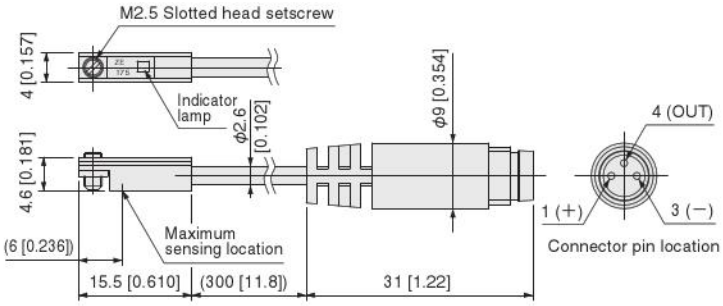

Dimensions of Solid State Type and Reed Switch Type Sensor Switches mm [in.]

● Vertical Lead Wire

● Solid state type (ZE235□, ZE255□, ZE275□)

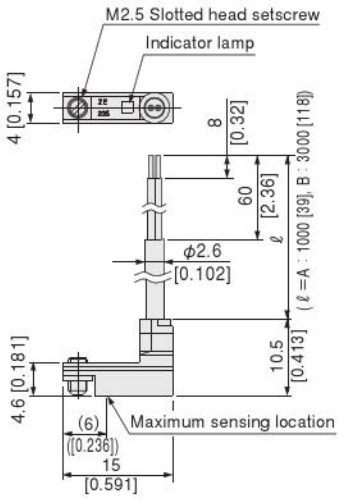

● Reed switch type (ZE201□, ZE202□)

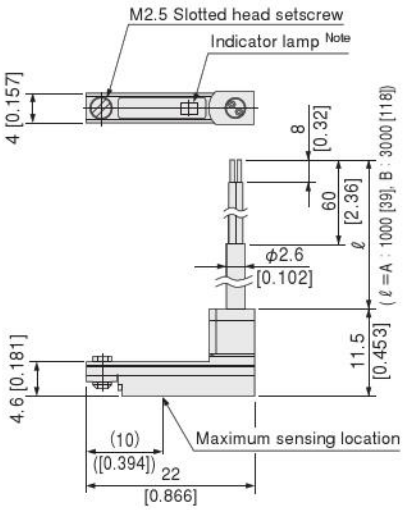

Note: Not available with **ZE201**.

● Solid state type (ZE275G)

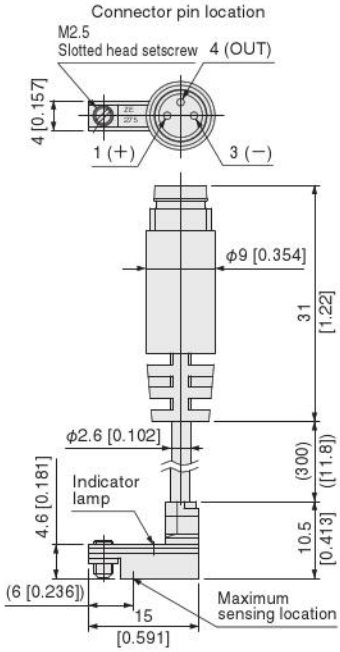

Contact Protection for Reed Switch Type Sensor Switches

In order to use the reed switch type sensor switches in a stable condition, take the following contact protection measures.

● When connecting inductive load (electromagnetic relay, etc.).

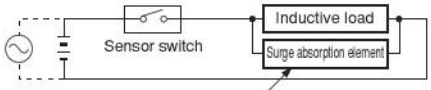

For DC··· Diode, CR, etc.
For AC··· CR, etc.
Diode: Forward current should be more than the circuit current.
Reverse direction voltage should be inverse voltage that is 10 times or more of the circuit voltage.
C=0.01 ~ 0.1 μF
R=1 ~ 4 kΩ

● When capacity surge is generated.

(When lead wire length exceeds 10 m [3.28 ft.])

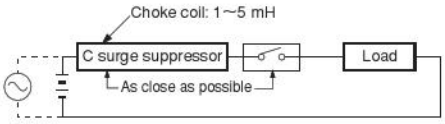

Points of Wiring Solid State Type Sensor Switches

● 2-lead wire type

● Basic connection

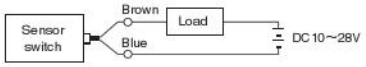

● Connection with relays

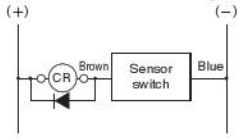

AND (series) connection and OR (parallel) connection

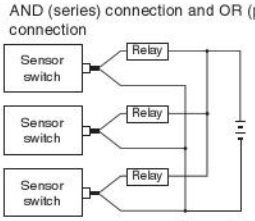

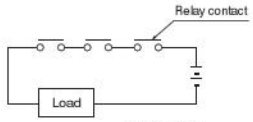

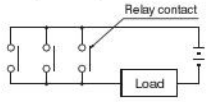

● Connection with solenoid valve

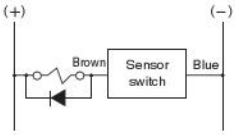

● Connection with programmable controller

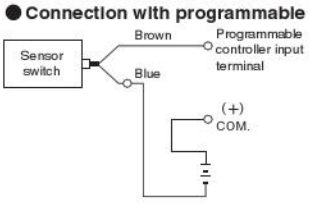

● 3-lead wire NPN output type

● Basic connection

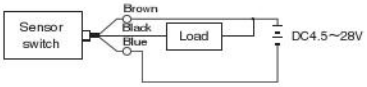

● Connection with relays

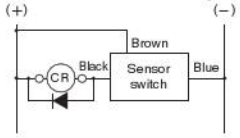

AND (series) connection and OR (parallel) connection

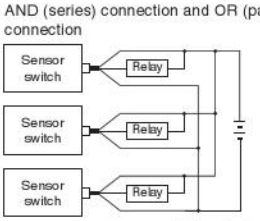

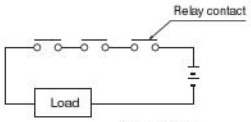

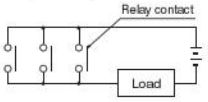

● Connection with solenoid valve

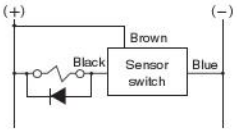

● Connection with programmable controller

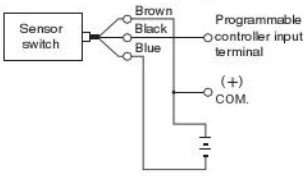

● 3-lead wire PNP output type

● Basic connection

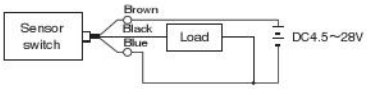

● Connection with relays

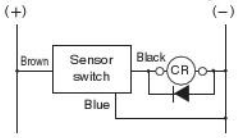

AND (series) connection and OR (parallel) connection

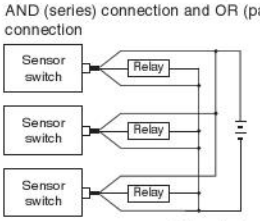

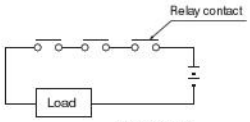

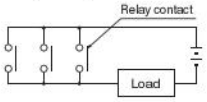

● Connection with solenoid valve

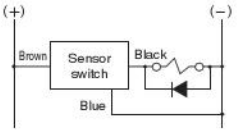

● Connection with programmable controller

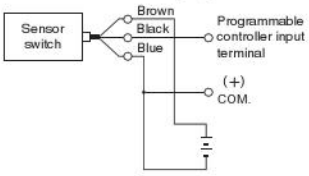

Cautions:

1. Connect wires according to the color of the lead wires. If the connection is incorrect, it could cause damage to the sensor switch due to the absence of overcurrent protection.
2. A surge suppression protection diode is recommended for the inductive load such as electromagnetic relays, etc.
3. Avoid series (AND) connection because the voltage of the circuit will drop in proportion to the number of sensor switches.
4. When using parallel (OR) connection, the same sensor output lines (e.g. the same black lead wires) can be connected together, but the current leakage will increase by the number of sensor switches. Therefore, be aware of load return abnormalities.
5. Because the sensor switches are a magnetically sensitive type, avoid using them in locations subject to strong external magnetic fields or bringing them too close to power lines or to where other large electric currents are present. In addition, do not use magnetic material for the mounting bracket, because it will cause erratic operations.
6. Do not pull or bend the lead wires excessively.
7. Avoid using sensor switches in strong chemical or gas environments.
8. Consult us for use in ambient atmospheres subject to water or oil.

Moving Solid State Type or Reed Switch Type Sensor Switches

- Loosening the mounting screw allows the sensor switch to be moved along the switch mounting groove of the Mini Guide Slider.
- Tighten the mounting screw with a tightening torque of 0.1 ~ 0.2 N・m [0.9 ~ 1.8 in・lbf].

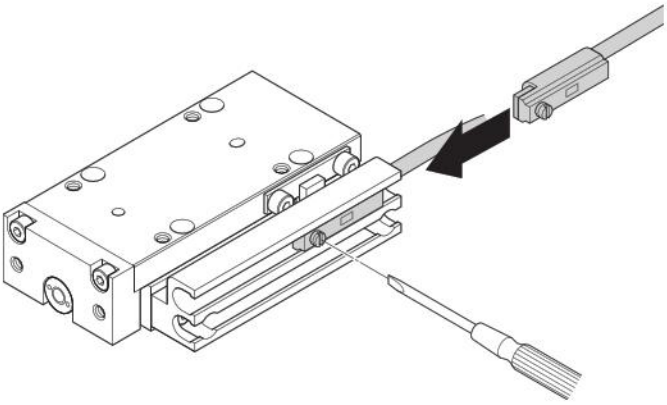

When Mounting Solid State Type or Reed Switch Type Sensors in Close Proximity

When mounting Mini Guide Sliders in close proximity, install them at the values shown in the table below, or larger.

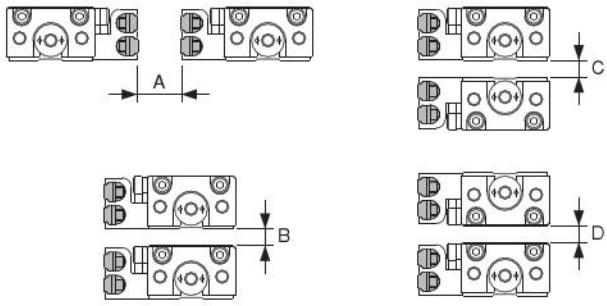

● Solid state type

mm [in.]

Model	A	B	C	D
MGAS4.5	4 [0.16]	2 [0.08]	3 [0.12]	5 [0.20]
MGAS6	3 [0.12]	2 [0.08]	4 [0.16]	4 [0.16]
MGAS8	3 [0.12]	2 [0.08]	4 [0.16]	4 [0.16]
MGAS10	3 [0.12]	2 [0.08]	4 [0.16]	4 [0.16]
MGAS12	3 [0.12]	2 [0.08]	2 [0.08]	4 [0.16]
MGAS16	3 [0.12]	2 [0.08]	2 [0.08]	2 [0.08]
MGAS20	3 [0.12]	2 [0.08]	2 [0.08]	2 [0.08]
MGAS25	3 [0.12]	2 [0.08]	2 [0.08]	2 [0.08]
MGAS32	3 [0.12]	2 [0.08]	2 [0.08]	2 [0.08]

● Reed switch type

mm [in.]

Model	A	B	C	D
MGAS4.5	2 [0.08]	2 [0.08]	2 [0.08]	2 [0.08]
MGAS6	2 [0.08]	2 [0.08]	4 [0.16]	2 [0.08]
MGAS8	2 [0.08]	2 [0.08]	4 [0.16]	2 [0.08]
MGAS10	2 [0.08]	2 [0.08]	4 [0.16]	2 [0.08]
MGAS12	2 [0.08]	2 [0.08]	2 [0.08]	2 [0.08]
MGAS16	2 [0.08]	2 [0.08]	2 [0.08]	2 [0.08]
MGAS20	2 [0.08]	2 [0.08]	2 [0.08]	2 [0.08]
MGAS25	2 [0.08]	2 [0.08]	2 [0.08]	2 [0.08]
MGAS32	2 [0.08]	2 [0.08]	2 [0.08]	2 [0.08]

Solid State Type and Reed Switch Type Sensor Switch Actuation Ranges, Response Differentials, and Maximum Sensing Locations

- Operating range: ℓ
  The distance the piston travels in one direction, while the switch is in the ON position.
- Response differential: C
  The distance between the point where the piston turns the switch ON and the point where the switch is turned OFF as the piston travels in the opposite direction.

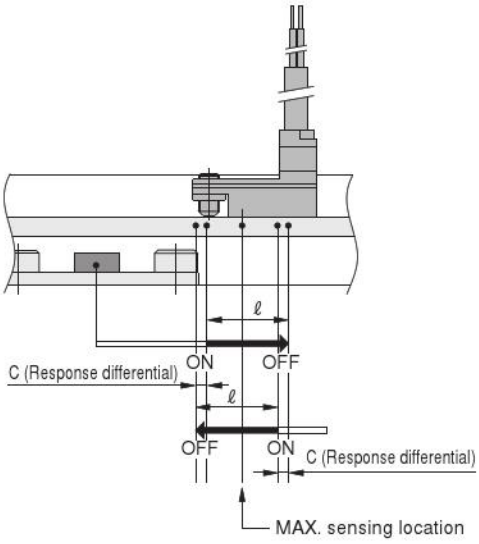

● Solid state type

mm[in.]

Item / Model	MGAS4.5	MGAS6	MGAS8	MGAS10	MGAS12	MGAS16	MGAS20	MGAS25	MGAS32
Operating range : ℓ	1.5 ~ 3.2 [0.059 ~ 0.126]								
Response differential : C	0.2 [0.008] or less								
MAX. sensing location Note	6 [0.236]								

Remark: The above table shows reference values.
Note: This is the length measured from the switch's opposite end side to the lead wire.

● Reed switch type

mm[in.]

Item / Model	MGAS4.5	MGAS6	MGAS8	MGAS10	MGAS12	MGAS16	MGAS20	MGAS25	MGAS32
Operating range : ℓ	3.0 ~ 6.0 [0.118 ~ 0.236]								
Response differential : C	1.5 [0.059] or less								
MAX. sensing location Note	10 [0.394]								

Remark: The above table shows reference values.
Note: This is the length measured from the switch's opposite end side to the lead wire.

Mounting Location of Solid State Type and Reed Switch Type End of Stroke Detection Sensor Switches

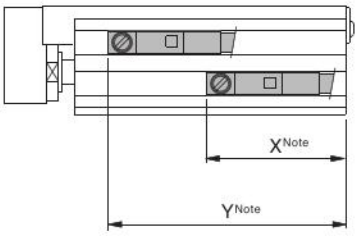

Note : Dimensions from the end of the sensor rail.

● Solid state type

mm

Model	MGAS4.5		MGAS6						MGAS8						MGAS10							
Stroke	5	10	5	10	15	20	25	30	5	10	15	20	25	30	5	10	15	20	25	30	40	50
X	18	18	18	18	18	18	18	18	18	18	18	18	18	18	19	19	19	19	19	19	19	19
Y	23	28	23	28	33	38	43	48	23	28	33	38	43	48	24	29	34	39	44	49	59	69

mm

Model	MGAS12									MGAS16										
Stroke	10	15	20	30	40	50	60	70	80	10	15	20	30	40	50	60	70	80	90	100
X	16.5	16.5	16.5	16.5	16.5	16.5	16.5	16.5	16.5	16.5	16.5	16.5	16.5	16.5	16.5	16.5	16.5	16.5	16.5	16.5
Y	26.5	31.5	36.5	46.5	56.5	66.5	76.5	86.5	96.5	26.5	31.5	36.5	46.5	56.5	66.5	76.5	86.5	96.5	106.5	116.5

mm

Model	MGAS20												
Stroke	10	15	20	30	40	50	60	70	80	90	100	120	125
X	16.5	16.5	16.5	16.5	16.5	16.5	16.5	16.5	16.5	16.5	16.5	16.5	16.5
Y	26.5	31.5	36.5	46.5	56.5	66.5	76.5	86.5	96.5	106.5	116.5	136.5	141.5

mm

Model	MGAS25									
Stroke	10	20	30	40	50	60	80	100	130	150
X	25.5	25.5	25.5	25.5	25.5	25.5	25.5	25.5	25.5	25.5
Y	35.5	45.5	55.5	65.5	75.5	85.5	105.5	125.5	155.5	175.5

mm

Model	MGAS32									
Stroke	10	20	30	40	50	60	80	100	130	150
X	27.5	27.5	27.5	27.5	27.5	27.5	27.5	27.5	27.5	27.5
Y	37.5	47.5	57.5	67.5	77.5	87.5	107.5	127.5	157.5	177.5

● Reed switch type

mm

Model	MGAS4.5		MGAS6						MGAS8						MGAS10							
Stroke	5	10	5	10	15	20	25	30	5	10	15	20	25	30	5	10	15	20	25	30	40	50
X	22	22	22	22	22	22	22	22	22	22	22	22	22	22	23	23	23	23	23	23	23	23
Y	27	32	27	32	37	42	47	52	27	32	37	42	47	52	28	33	38	43	48	53	63	73

mm

Model	MGAS12									MGAS16										
Stroke	10	15	20	30	40	50	60	70	80	10	15	20	30	40	50	60	70	80	90	100
X	20.5	20.5	20.5	20.5	20.5	20.5	20.5	20.5	20.5	20.5	20.5	20.5	20.5	20.5	20.5	20.5	20.5	20.5	20.5	20.5
Y	30.5	35.5	40.5	50.5	60.5	70.5	80.5	90.5	100.5	30.5	35.5	40.5	50.5	60.5	70.5	80.5	90.5	100.5	110.5	120.5

mm

Model	MGAS20												
Stroke	10	15	20	30	40	50	60	70	80	90	100	120	125
X	20.5	20.5	20.5	20.5	20.5	20.5	20.5	20.5	20.5	20.5	20.5	20.5	20.5
Y	30.5	35.5	40.5	50.5	60.5	70.5	80.5	90.5	100.5	110.5	120.5	140.5	145.5

mm

Model	MGAS25									
Stroke	10	20	30	40	50	60	80	100	130	150
X	29.5	29.5	29.5	29.5	29.5	29.5	29.5	29.5	29.5	29.5
Y	39.5	49.5	59.5	69.5	79.5	89.5	109.5	129.5	159.5	179.5

mm

Model	MGAS32									
Stroke	10	20	30	40	50	60	80	100	130	150
X	31.5	31.5	31.5	31.5	31.5	31.5	31.5	31.5	31.5	31.5
Y	41.5	51.5	61.5	71.5	81.5	91.5	111.5	131.5	161.5	181.5

Linear magnetic sensor controller

ZL1

Specifications

● Controller

Item / Model	ZL1
Power supply voltage	24 VDC ±10%
Consumption current	50 mA max. (Not including supply power to sensor.)
Sensor input supply power and voltage	5 VDC
Sensor input maximum input voltage	3.0 V
Switch output method	NPN open collector output, 5 points
Load voltage	30 VDC
Load current	50 mA max.
Switch output volume repeatability	±1% F.S. ±1 digit Note
Internal voltage drop	0.3 V MAX. (When Ic = 5 mA)
Response time	5 ms MAX.
Operation indicator light	Lights red when each switch output is on.
Value display	% display within effective measuring range (4 digits, 2-color display: red and green)
Analog output voltage range	1 ~ 5 VDC (1 KΩ output impedance)
Analog output repeatability	±1% of F.S (25°C±5°C) Note
Insulation resistance	100 MΩ MIN. (500 VDC Megger, between case and lead wire terminal)
Withstand voltage	500 VAC (50/60 Hz) in 1 minute (between case and lead wire terminal)
Shock resistance	294.2 m/s^2 (non repetitive)
Ambient temperature	0 to 50°C (non-condensation, non-freezing)
Storage temperature range	-10 to 70°C (non-condensation, non-freezing)
Mass	40 g

Note: This performance excludes the mechanical looseness of a cylinder with a fixed magnet (standalone performance). In the case of a movable type cylinder whose magnet is not fixed, the movable part and repeatability are degraded.

● Sensor head

Item / Model	ZLS1-□L	ZLS2-□L
Power supply voltage	5 VDC±5%	
Consumption current	20 mA max.	
Mounting methods	Horizontal lead wire embedded type	Vertical lead wire embedded type
Operation indicator light	Red LED lights at optimal sensitivity position (Operation position can be changed by setting.)	
Lead wire	Heat-resistant, oil-resistant vinyl sheath instrumentation cable ϕ2.9 0.15 mm^2 5 core With 6P connectors	
Insulation resistance	100 MΩ MIN. (500 VDC Megger, between case and lead wire terminal)	
Withstand voltage	500 VAC (50/60 Hz) in 1 minute (between case and lead wire terminal)	
Shock resistance	294.2 m/s^2 (non repetitive)	
Protective structure	IP67	
Vibration resistance	88.3 m/s^2 (Double amplitude: 1.5 mm 10 ~ 55 Hz)	
Ambient temperature	0 to 50°C (non-condensation, non-freezing)	
Storage temperature range	-10 to 70°C (non-condensation, non-freezing)	
Mass	20 g (When 1L lead wire length is 1000 mm.)	

Actuation Range when Installed on Mini Guide Slider

(mm [in.])

Parts	Model	Bore size								
		4.5	6	8	10	12	16	20	25	32
Mini Guide Slider Note	**MGA**	2 [0.079]								

Note: A sensor cylinder with a sensor switch magnet built in is used as the actuator.
Remark: The values above include response differentials and are for reference purposes.

Connector number

● Sensor head

Connector side number	Signal name	Lead wire color
1	Sensor head voltage (+)	Sensor head brown lead
2	Sensor head voltage output A_IN	Sensor head white lead
3	Sensor head voltage output B_IN	Sensor head black lead
4	Indicator (LED) input	Sensor head red lead
5	GND	Sensor head blue lead
6	NC	Not connected

● Power supply

Pin No.	Signal name	Lead wire color
1	Power supply voltage input (24 V)	Brown
2	Analog output (1 ~ 5V)	Gray
3	Effective measuring range signal output (STABI)	Black
4	GND	Blue
5	Switch output OUT1	White
6	Switch output OUT2	Red
7	Switch output OUT3	Green
8	Switch output OUT4	Yellow

Mounting and Piping

Sensor head and connector connection overview

The **ZLS1-□** sensor head is provided to you with the mini plug wire mount plug connected to the sensor head unit.A special tool is required if you need to reconnect in order to adjust the length. Use the following procedure when reconnecting.

1. Be sure to use the mount plug and the special tool shown below when reconnecting.
   6P mini clamp wire mount plug Model: **ZL-6M**
   Special tool Model: **1729940-1**
   Tyco Electronics Japan G.K.
2. Check to make sure that the connector cover (lead wire inlet) is sitting above the body of the connector. Note that a connector whose cover is even with the body of the connector cannot be used.

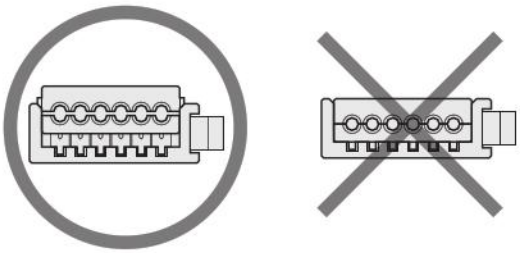

3. Cut the sensor head cable to the required length.
   Strip the outer covering of the cable, 50 mm from the end, to expose the lead wires. Do not strip the insulation from the individual lead wires at this time.

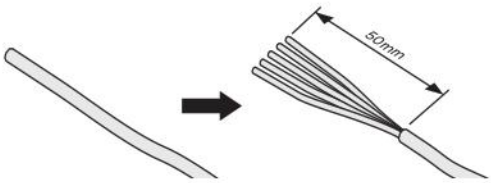

4. Insert the lead wires into the connector cover holes in accordance with the information in the table below. Check to make sure the lead wires are fully inserted (wire goes in about 9 mm) as far as they will go by viewing the semi-transparent top cover of the connector.
   Note that supplying power while connections are incorrect will damage the sensor head and controller.

Connector side number	Signal name	Lead wire color
1	Sensor head voltage (+)	Sensor head brown lead
2	Sensor head voltage output A_IN	Sensor head white lead
3	Sensor head voltage output B_IN	Sensor head black lead
4	Indicator (LED) input	Sensor head red lead
5	GND	Sensor head blue lead
6	NC	Not connected

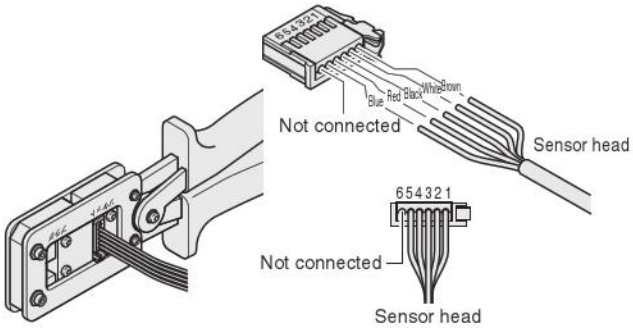

5. Taking care not to allow the lead wires to come out of the connector, use the special tool (don't try to use any other tool) to squeeze the cover and body of the connector until the cover is pressed into the body.
   Connection is complete when the cover is even with the connector body.
6. Double check to make sure that wiring is correct.

Attaching and detaching of the sensor head and power/switch cables

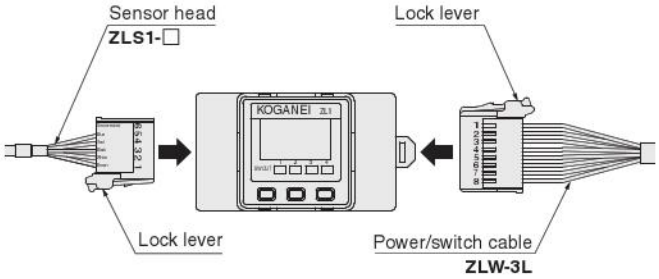

To attach the sensor head and the power/switch cables, position the lock levers as shown in the illustration above, and then insert until they lock into place with the controller side connectors.To disconnect, press the lock lever down as far as it will go as you pull the connector to unplug it. At this time, take care not to apply undue force to the lead wires.

Attaching the protective front cover

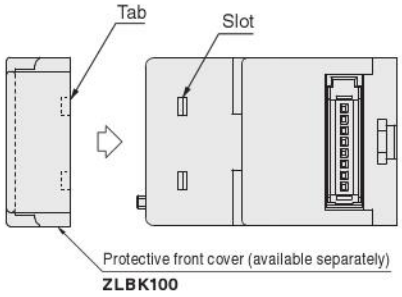

Attach the protective front cover so the tabs inside the cover enter the slots on the Linear Magnetic Sensor Controller.

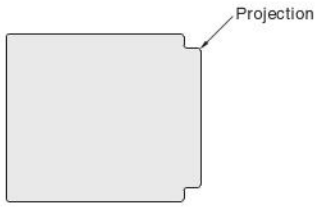

※To remove the protective front cover, hook your finger on the projection on one side of the cover and remove it.

Handling Instructions and Precautions

Sensor head installation precautions

1. When mounting actuators fitted with linear magnetic sensors in close proximity to each other, secure a clearance of at least 40 mm [1.575].

A ≧ 40 mm [1.575]

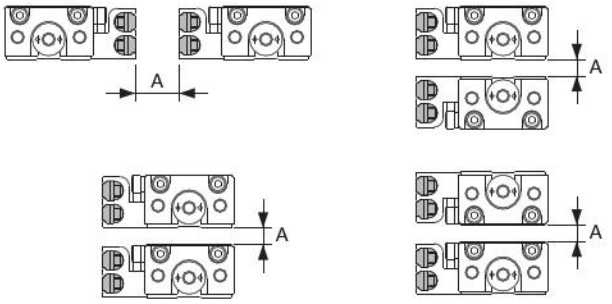

2. Refer to "Moving Solid State Type or Reed Switch Type Sensor Switches" on p.176 for instructions on installing and moving linear magnetic sensor heads.

General Precautions

Wiring

1. Always connect the frame ground (F.G.) terminal when using a switching regulator available in the general market as the power supply.
2. Always connect the frame ground (F.G.) terminal when using devices that generate electrical noise, such as switching regulators and inverter motors, in the vicinity of the sensor mount position.
3. After completing the wiring, check that all wires are connected correctly.

Other

1. Check the power fluctuation to ensure that the input power does not exceed the rated value.
2. Avoid using the product while the power is unstable when powering up (for 1 second).
3. Do not operate the keys using a needle or any other sharp instrument.

Internal Circuit Diagrams

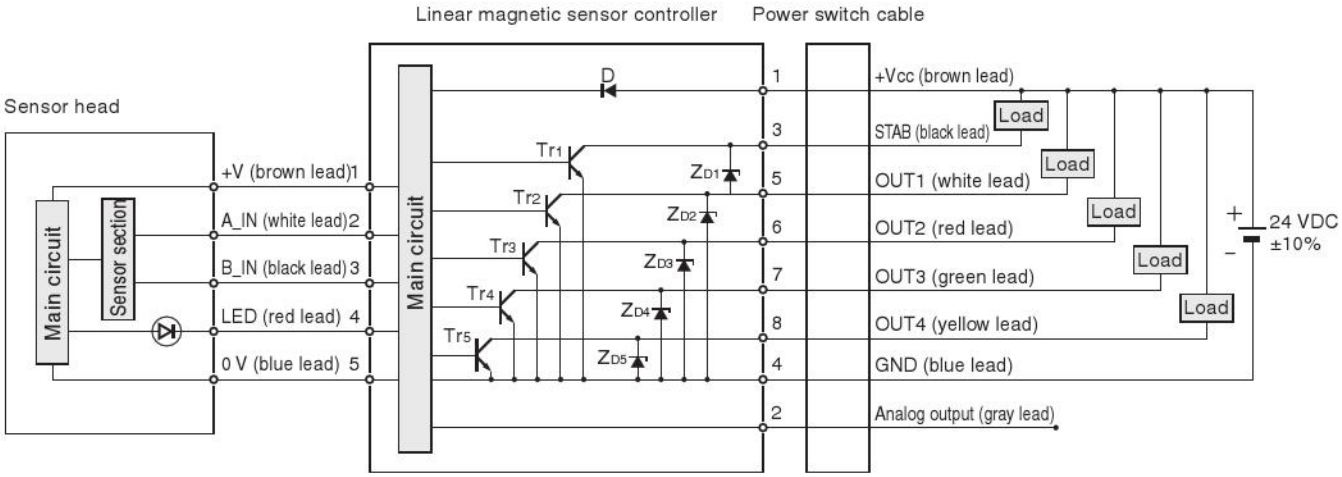

Note: Note that extending the cable can cause a drop in voltage due to cable resistance.

Signal D	: Power supply reverse-polarity protection diode
$Z_{D1} \sim Z_{D5}$	: Surge voltage absorption zener diode
$Tr_1 \sim Tr_5$	: NPN output transistors

Linear Magnetic Sensor Controller Order Codes

ZL1 - □ - □

Power supply/switch cable
Blank : No power supply/switch cable
3L : With power supply/switch cable (length: 3000 mm [118 in.])

Front protection cover
Blank : No front protection cover
C: With front protection cover

Linear magnetic sensor controller

Additional Parts (Separately Available Parts)

● **Sensor head, horizontal**

ZLS1 - □

Cable length
1L: 1000 mm [39 in.]
3L: 3000 mm [118 in.]

Sensor head

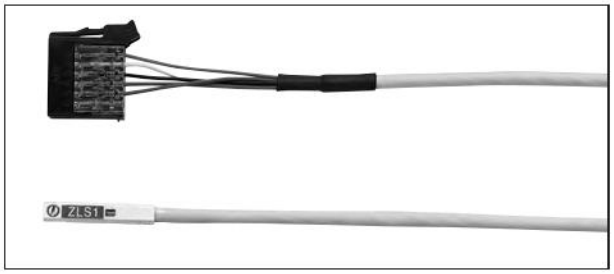

Sensor head, vertical

ZLS2 - □

Cable length
1L: 1000 mm [39 in.]
3L: 3000 mm [118 in.]

Sensor head

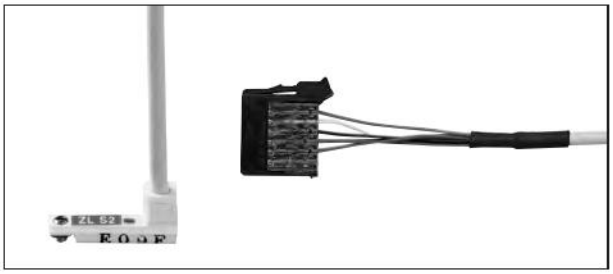

● **Power supply/switch cable**

ZLW-3L

● **Front protection cover**

ZLBK100

● **6-pin mini-clamp wire mount plug (for sensor head)**

ZL-6M

● **8-pin mini-clamp wire mount plug (for power supply/switch cable)**

ZL-8M

Dimensions of the Linear Magnetic Sensor Controller (mm [in.])

● **ZL1-**□ **-**□ (controller portion)

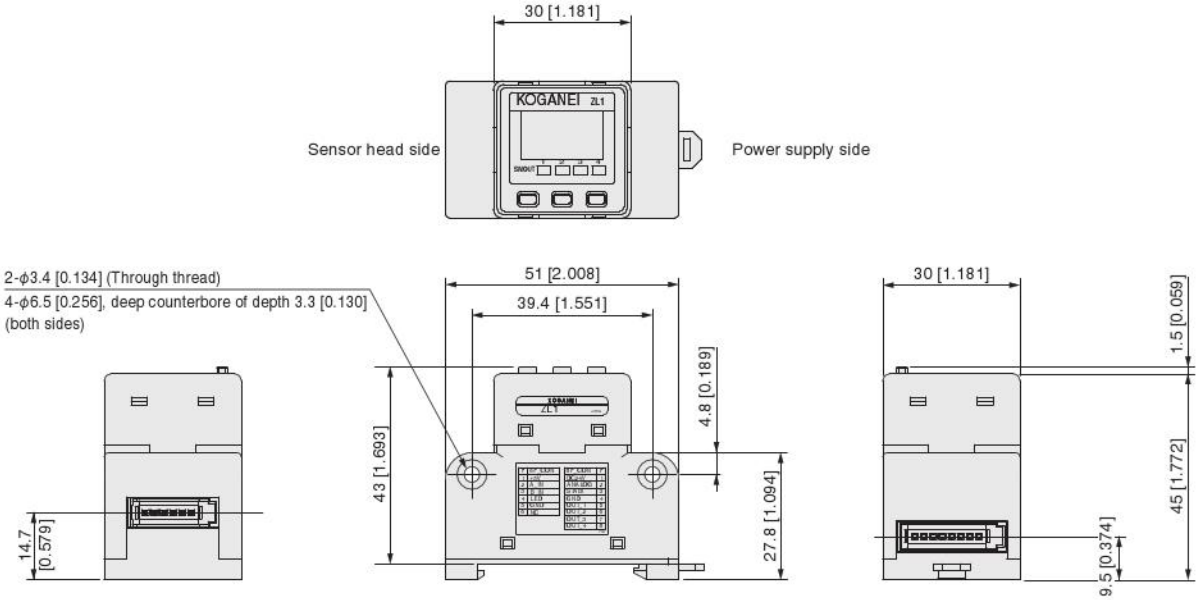

● **ZLS1-**□ (sensor head portion)

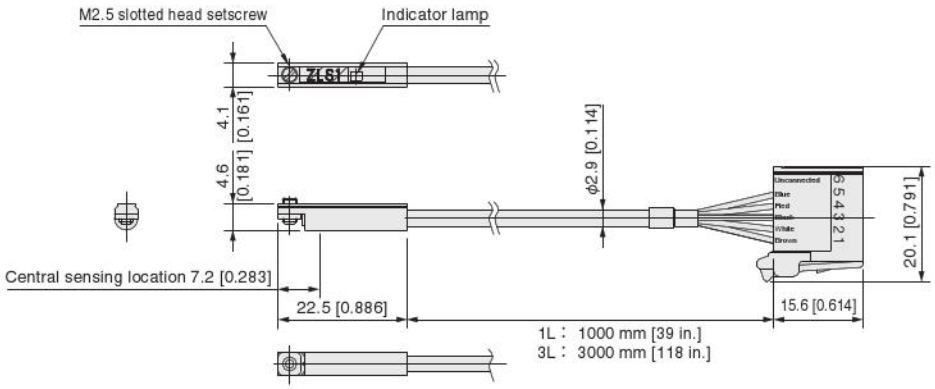

● **ZLS2-**□ (sensor head portion)

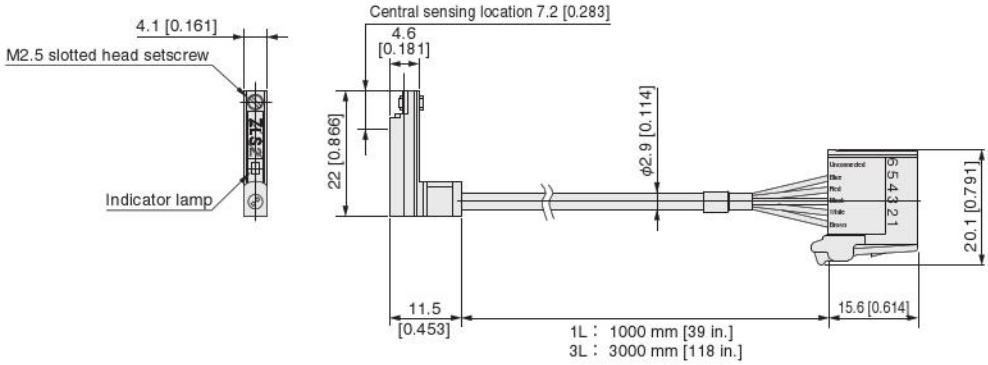

●**ZLW-3L** (power supply/switch cable)

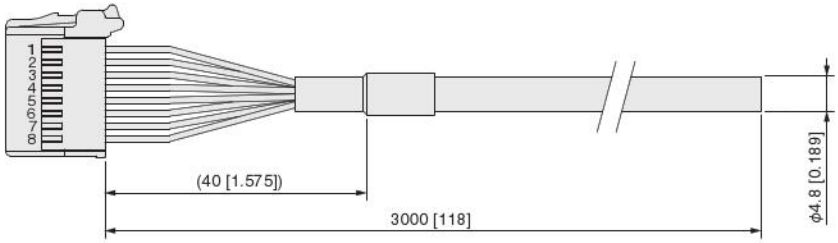

Dimensions of the Linear Magnetic Sensor Controller (mm [in.])

● **ZLBK100** (front protection cover)

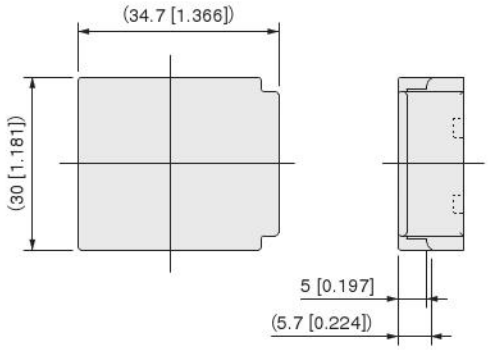

● **ZL-6M** (6-pin mini-clamp wire mount plug for sensor head)

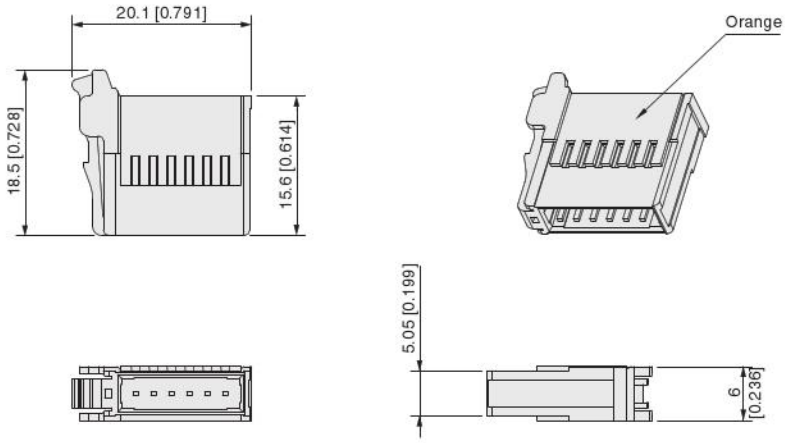

● **ZL-8M** (8-pin mini-clamp wire mount plug for power supply/switch cable)

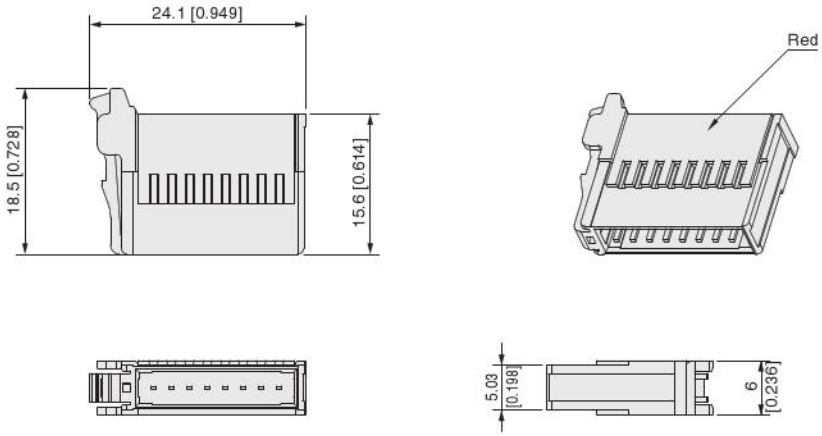

Setting Instructions

■ Nomenclature and functions

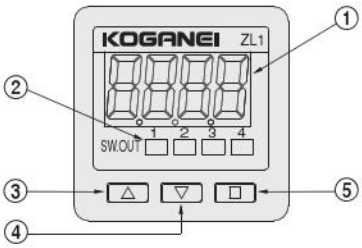

No.	Name	Description
①	Display	Shows effective measuring range %, setting details, error indicators.
②	Switch output indicators.	Light when switch output is ON (CH1 ~ CH4).
③	UP key (△).	Use to increase a setting value.
④	DOWN key (▽).	Use to decrease a setting value.
⑤	MODE key (□).	Use when configuring settings.

■ Setting

⚠ CAUTION

1. Incorrect wiring of the sensor head or power/switch cable will damage both the controller and the sensor head. Be sure to double-check and make sure that wiring is correct before supplying power.
2. Parameters that are set are recorded into flash memory and retained there. Note that flash memory has a limited service life. The guaranteed number of rewrites is 10,000.

■ Getting ready to configure settings

・Connect the sensor head and power/switch cable to the controller. (Refer to "Attaching and detaching of the sensor head and power/switch cables" on p. 179).

■ Configuring settings

General flow

First specify the cylinder model that is equipped (SET2), and then configure the other settings (as shown below).
You also can use the procedure below to modify settings.

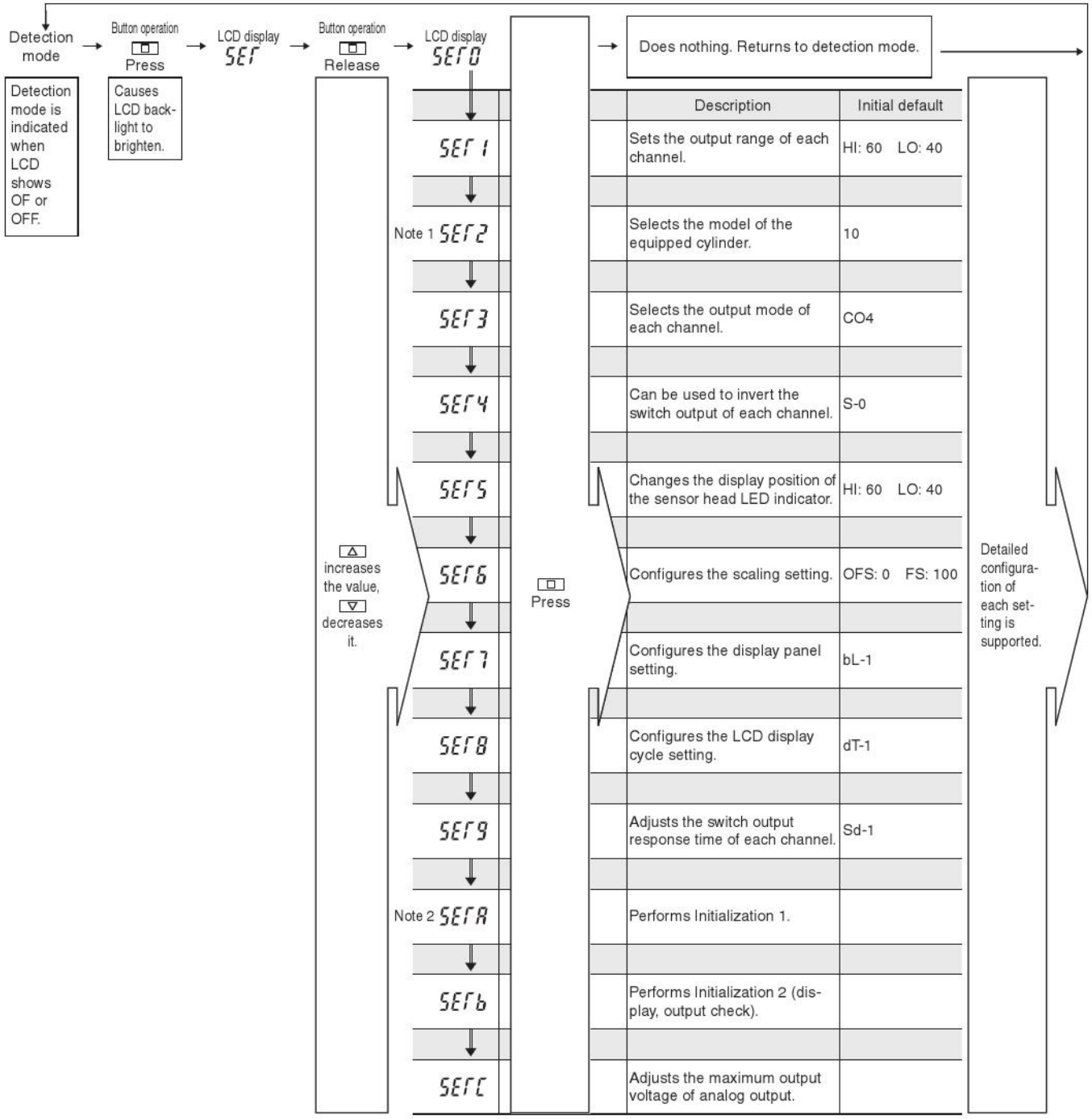

Note 1: Always be sure to configure the equipped cylinder model setting. Failure to do so creates the risk of malfunction.
2: Note that initialization (SETA, SETB) initializes all settings, so any settings you have configured are lost.

Threshold value setting (SET1)

Use this setting to set threshold values for each channel.

	Window comparator	Hysteresis
Upper limit (L2)	ON/OFF positions	ON position
Lower limit (L1)	ON/OFF positions	OFF position

Procedure	Button operation	Display after operation	Indicator	Backlight	Remarks
1		SET1		Green	Set the output range of each OUT.
2	□	(Initial default: 60)	OUT flashing	Red	Set the upper limit value for indicator flashing.
3	△ ▽		↓	↓	Change the setting value as required.
4	□	(Initial default: 40)		Green	Set the lower limit value for indicator flashing.
5	△ ▽		↓	↓	Change the setting value as required.
6	□	(Initial default: 60)	OUT flashing	Red	OUT2, OUT3: Repeat steps 2 through 5.
					OUT4: Return to detection mode.

Note 1: Input condition - Upper Limit (L2) > Lower Limit (L1) + 1
2: When the scaling setting is being used and the difference between its 0Fs and Fs values is 500 or greater, use the following for the threshold value setting input condition: Upper Limit (L2) > Lower Limit (L1) + 10.

Installed cylinder model setting (SET2)

Change this setting in accordance with the cylinder model that the cylinder head will be set into.

Procedure	Button operation	Display after operation	Remarks
1		SET2	Selects the model of the equipped cylinder.
2	□	AnLG	
3	□	(Initial default: 10)	
4	△ ▽		Change the model number of the equipped cylinder.
5	□	oF	After one second, returns to detection mode.

Applicable cylinder	Cylinder Bore	SET2 number
NHC1D	All cylinders	10
NHL1D	All cylinders	10
NHB□PG(L)	All cylinders	10
NHB□P(A)	All cylinders	10
NHB□S	All cylinders	10
NHBDSL(G)	All cylinders	10
AFDPG	6, 18	15
	8, 14	12
	12	16

Applicable cylinder	Cylinder bore	SET2 number
MGA	All cylinders	20
TBDA	All cylinders	18
ARS	All cylinders	16
CDAS SGDA	6	13
	8	14
	32	16
	Other than above	15
MS	6, 10	18
	16, 20	16

For information about other cylinders, contact Koganei.

Output mode setting (SET3)

Use this setting to set the output mode for each channel.

Procedure	Button operation	Display after operation	Remarks
1		SET3	Set the output range of each OUT.
2	□	CH1	Select the channel of each OUT.
3	△ ▽	CH1~CH4	CH1: OUT1 CH2: OUT2 CH3: OUT3 CH4: OUT4
4	□	CO4	Select the output mode.
5	△ ▽	OFF~HrS	OFF : Output OFF CO4 : Window comparator mode HrS : Hysteresis mode (Note)
6	□	CH※	Shows the channel number setting (1 second)
			Shows the channel mode setting (1 second)
7		oF	After one second, returns to detection mode.

Caution: Valid within the effective measuring range (operating range).

Switch output inversion setting (SET4)

This setting can be used to invert the switch output of each channel.

Procedure	Button operation	Display after operation	Remarks
1		SET4	Set the contact type of each OUT.
2	□	CH1	Select the channel of each OUT.
3	△ ▽	CH1~CH4	CH1: OUT1 CH2: OUT2 CH3: OUT3 CH4: OUT4
4	□	S-0	Select the contact type.
5	△ ▽	S-0~S-1	S-0 : Non-inversion (A contact) S-1 : Inversion (B contact)
6	□	CH※	Shows the channel number setting (1 second)
			Shows the channel mode setting (1 second)
7		oF	After one second, returns to detection mode.

LED display range setting (SET5)

This setting can be used to change the display position of the sensor head LED indicator.

Procedure	Button operation	Display after operation	Remarks
1		SET5	
2	□	Lo	Set the display lower limit value.
3	□	(Initial default: 40)	
4	△ ▽		Change the value as required.
5	□	Hi	Set the display upper limit value.
6	□	(Initial default: 60)	
7	△ ▽		Change the value as required.
8	□	oF	After one second, returns to detection mode.

Scaling setting (SET6)

With this setting, a location between two points is specified and scaling is performed.

Procedure	Button operation	Display after operation	Remarks
1		SET6	
2	□	0FS	Move the cylinder to the lower limit value position.
3	□	(Initial default: 0)	Set the scaling lower limit value.
4	△ ▽		Change the value as required.
5	□	FS	Move the cylinder to the upper limit value position.
6	□	(Initial default: 100)	Set the scaling upper limit value.
7	△ ▽		Change the value as required.
8	□	oF	After one second, returns to detection mode.

Input conditions

0<0FS<FS

0FS<FS<1000

The voltage differential between the 0FS position and FS position must be at least 1 V.

If these conditions are not met, E-1 will appear on the display and the setting will be disregarded.

Note 1: After changing this setting, you will need to perform initialization in order to return to the original setting.
2: After the scaling setting is changed, all of the threshold values become Upper Limit (L2) = FS Lower Limit (L1) = 0FS. Configure the initialization value settings as required after changing this setting.
3: After the scaling setting is changed, the threshold value setting range is 0FS to FS.

Backlight display setting (SET7)

Use this setting to configure backlight color settings.

Procedure	Button operation	Display after operation	Remarks
1		SET7	
2	□	bL-1	Backlight setting
3	△ ▽		bL-0~bL-4
4	□	oF	After one second, returns to detection mode.

[Backlight Color Setting]

bL-0 Backlight OFF
bL-1 When switch output OFF: Green When switch output ON: Red
bL-2 When switch output OFF: Red When switch output ON: Greenn
bL-3 Always green
bL-4 Always red
・Linking to switch output links operation to which output channel 1.

LCD display cycle setting (SET8)

Use this setting to configure the display cycle of the LCD.

Procedure	Button operation	Display after operation	Remarks
1		SET8	
2	□	dF-1	Sampling cycle setting
3	△ ▽		dF-1~dF-3
4	□	oF	After one second, returns to detection mode.

[LCD display cycle setting]

dF-1 250 ms
dF-2 500 ms
dF-3 1000 ms

Switch output response time setting (SET9)

Use this setting to configure the response time for switch output.

Procedure	Button operation	Display after operation	Remarks
1		SET9	
2	□	Sd-1	Output delay setting
3	△ ▽		Sd-1~Sd-4
4	□	oF	After one second, returns to detection mode.

[Switch output response time setting]

Sd-1 5 ms max.
Sd-2 ≒ 20 ms
Sd-3 ≒ 100 ms
Sd-4 ≒ 1000 ms

Initialization 1

This setting can be used to return settings to their initial default values.

Procedure	Button operation	Display after operation	Remarks
1	□	SETA	Performs initialization.
2	△ ▽ □		Press all three at the same time. Or, while holding down □, press △ and then ▽.

Note: After performing this operation, all data will be initialized.
Make a note of the changed settings before performing this operation.

Initialization 2 (display, output check)

This setting can be used to return settings to their initial default values. It also checks the display and output status at the same time.

Procedure	Button operation	Display after operation	Remarks
1		SETb	Performs initialization. (Display check)
2	△ ▽ □		Press all three at the same time. Or, while holding □, press △ and then ▽.

Caution: This operation will cause all switch outputs to momentarily change to ON.
Following this operation, all data will be initialized. If you need any current settings, be sure to make a separate written copy of them before performing this operation.

Maximum output voltage of analog output adjustment (SETC)

Use this setting to adjust the maximum output voltage of analog output.

Procedure	Button operation	Display after operation	Remarks
1		SETC	Adjust the maximum output voltage of analog output.
2	□	SPAn	
3	□	4095	Shows voltage output from analog output.
4	△ ▽	Change value	Use a multimeter or other instrument to check the analog output voltage as you adjust the maximum output voltage.
5	□	oF	After one second, returns to detection mode.

Error Indicators

Indicator	Meaning	Required action
oFF	The sensor head of the selected channel is not connected or has been disconnected.	In the case of disconnection, turn off power and replace the sensor head.
E-1	Invalid scaling setting.	Reconfigure the scaling setting so it satisfies the required scaling conditions.
E-2	Over voltage being applied to sensor input.	After correcting for the source of the problem, hold down the MODE key for more than one second.
E-3n (n: applicable channel)	Over voltage being applied to switch output.	

Special Specifications

For the Mini Guide Slider, we have prepared certain special specifications that have been proven to be particalarly popular.

To place an order, enter codes in the parentheses at the end of the order code.

For detailed specifications, dimensions, and delivery schedules, consult us.

1. Low speed and adaptable to speed change specification (-1W)

Suitable for repeated stops and movements, or for operation at fixed low speeds.

Speed range 5 to 300 mm/s [0.2 to 11.8 in./sec.]

※ Outward dimensions are the same as the standard products.

※ The -1W option is not available for the clean system cylinder (cleanroom specification).

Order example: For low speed and adaptable to speed change specification

● **MGA6×10-R-1W**

Caution: The above special specification may vary from the standard products in terms of delivery schedule, price, dimensions, and operating life. Consult us before placing an order.