KOGANEI

http://www.koganei.co.jp

Catalog No. BK-E0019

NEW Products

New-Generation Air Treatment Equipment

New Filter Regulators FRZ Series Combination CMZ Series

New Generation Air Treatment Combinations

CMZ series

Leave your air treatment combination needs to Koganei.

Four types of combinations are available to suit your needs. Selectable from a variety of combinations for each type.

Improved oil resistance PCT resin bowl (option)

Improved resistance to cutting oil and alcohol
See page 162 for resistance test results

* PCT: Polycyclohexylene-dimethylene terephthalate

First, Select a Combination Type

Choose from 4 types according to your intended use.

Standard Combination

CMZA

General Industrial Equipment Applications

- Filter and regulator are mounted separately
- Widest range of combinations
- Can be used with various air qualities

Compact Combination

CMZB

General Industrial Equipment Applications

Space saving

- Filter regulator-equipped type
- Overall length (face to face) more compact than CMZA

High-End Compact Combinations

CMZ

Space-Saving & Compact

End-of-Line Applications

- Most Compact Combinations
- Suitable for final air treatment and pressure adjustment in lines with relatively clean primary side air quality

Filter Combinations

CMZF

Air Treatment

- Filter combinations specialized for air treatment
- Combinations available to suit any desired air quality

CAUTION Read the safety precautions on page 9 before using this product.

iB Series

iB-Cyclone

Page 61

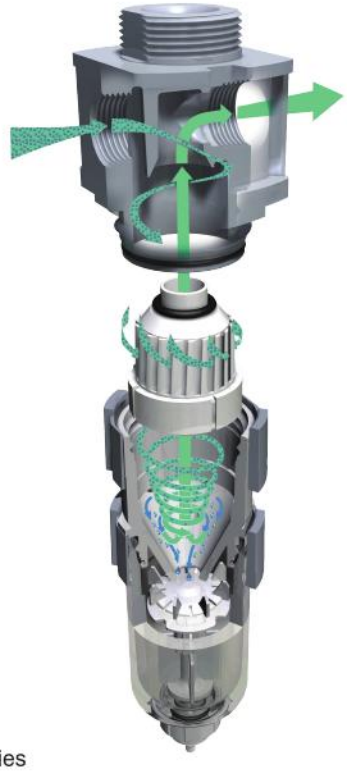

High-speed cyclone type water separator!

IBCY30

IBCY40

IBCY50

* When with bowl guard

Can be used in combination with FRZ series

* Only for 40 and 50 series body sizes

FRZ series

Air filter • Oil mist filter • Micro oil mist filter

Specialized for standalone applications

30 series

Air filter
FNZ30

Oil mist filter
MFZ30

Micro oil mist filter
MMFZ30

* All photos are with bowl guard

Can be used in combination

40 and 50 series

Page 79

Air filter
FNZ40

Air filter
FNZ50

Oil mist filter
MFZ40

Micro oil mist filter
MMFZ40

Oil mist filter
MFZ50

Micro oil mist filter
MMFZ50

Filter regulator

Page 99

Easy-to-use moisture and fluid removal functions in a compact design!

Specialized for standalone applications
30 series

Filter regulator
FRZB30

* All photos are with bowl guard

Can be used in combination
40 and 50 series

Filter regulator
FRZB40

Filter regulator
FRZB50

Filter regulator, regulator

(With no drain cock)

Page 119

Excellent for air lines with moisture and fluid already removed! The compact body can be mounted in any direction!

Regulator
RZ30

Filter regulator
FRZ30

Regulator
RZ40

Filter regulator
FRZ40

Regulator
RZ50

Filter regulator
FRZ50

Cutting fluid resistant specifications

Oil resistant specification
Page 162

In addition to existing polycarbonate bowl material specifications, you can also choose PCT resin, which is highly resistant to oil and chemicals.

For details, see our homepage. **http://www.koganei.co.jp**

iB-Cyclone・FRZ series system chart

Series name	Specifications	Model	Port size					Page
			M5	Rc1/8	Rc1/4	Rc3/8	Rc1/2	
			M5	01	02	03	04	
iB-Cyclone (Water separator) **IBCY**	–	**IBCY30**		●	●			Page 61
		IBCY40		●	●	●		
		IBCY50			●	●	●	
	–							
Air filter **FNZ**	5 μm filtration	**FNZ30**		●	●			Page 79
		FNZ40		●	●	●		
		FNZ50			●	●	●	
	40 μm filtration	**FNZ31**		●	●			
		FNZ41		●	●	●		
		FNZ51			●	●	●	
Oil mist filter **MFZ**	0.3 μm filtration	**MFZ30**		●	●			
		MFZ40		●	●	●		
		MFZ50			●	●	●	
Micro oil mist filter **MMFZ**	0.01 μm filtration	**MMFZ30**		●	●			
		MMFZ40		●	●	●		
		MMFZ50			●	●	●	
FRZB Filter regulator with drain cock **FRZB**	Standard	**FRZB30**	●	●	●			Page 99
		FRZB40		●	●	●		
		FRZB50			●	●	●	
	For low pressure	**FRZB31**	●	●	●			
		FRZB41		●	●	●		
		FRZB51			●	●	●	
	Built-in check mechanism	**FRZB32**	●	●	●			
Filter regulator with no drain cock. The compact body can be mounted in any direction. **FRZ**	Standard	**FRZ30**	●	●	●			Page 119
		FRZ40		●	●	●		
		FRZ50			●	●	●	
	For low pressure	**FRZ31**	●	●	●			
		FRZ41		●	●	●		
		FRZ51			●	●	●	
	Built-in check mechanism	**FRZ32**	●	●	●			
Regulator **RZ**	Standard	**RZ30**	●	●	●			Page 119
		RZ40		●	●	●		
		RZ50			●	●	●	
	For low pressure	**RZ31**	●	●	●			
		RZ41		●	●	●		
		RZ51			●	●	●	
	Built-in check mechanism	**RZ32**	●	●	●			
Residual pressure exhaust valve **50VZ**	–	**50VZ**		●	●	●	●	Page 141

Systems can be upgraded with modules!

The optimum system can be assembled by using D modules and various modules.

Note: Only the 40 and 50 series body sizes support modular configuration. The 30 series body size cannot be combined and configured with modules. It is for standalone use only.

1. Examples of various combinations

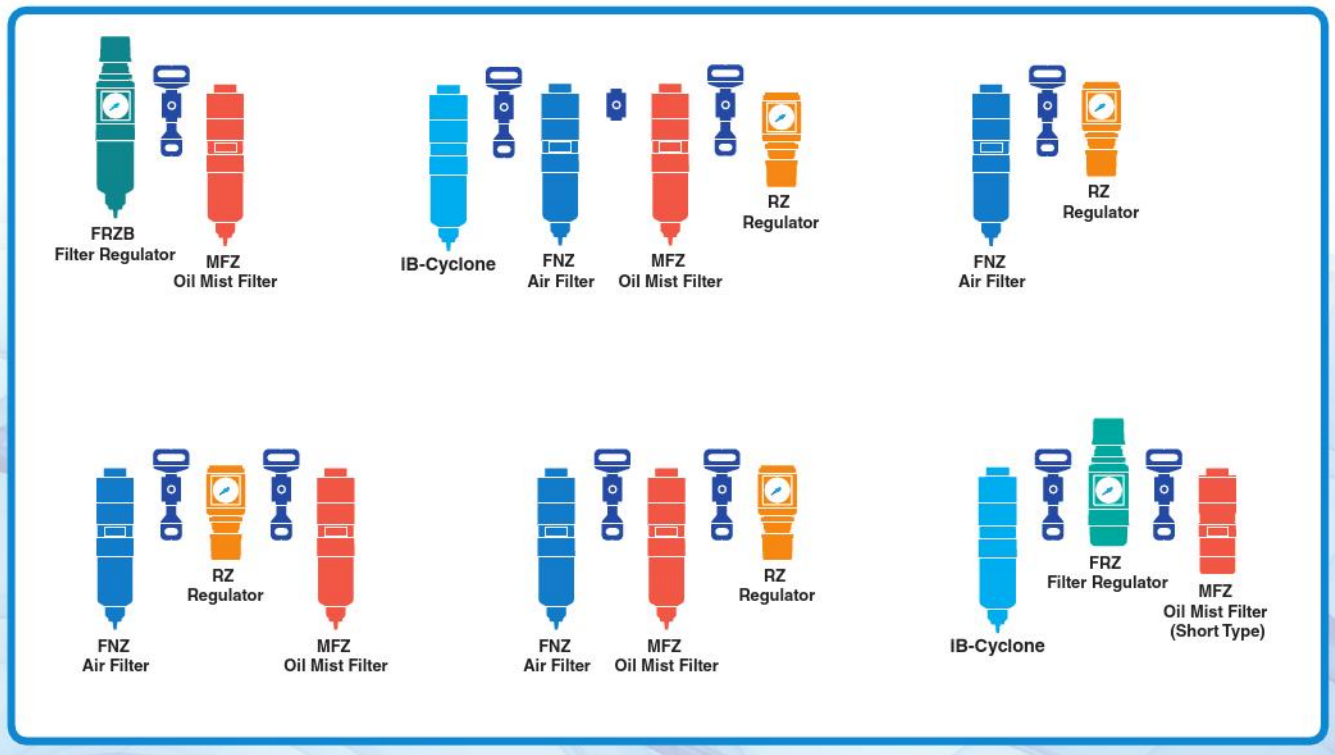

2. Examples of filter modules combinations

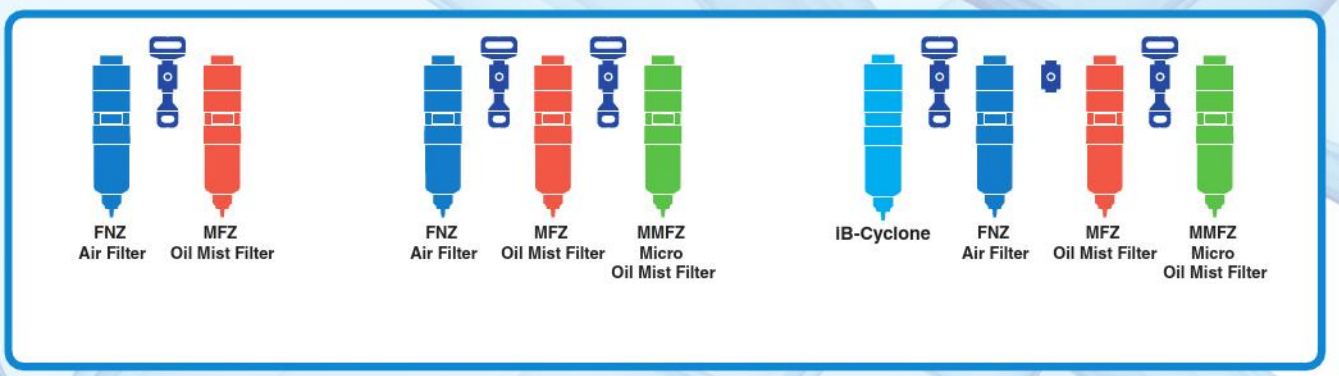

List of module and adapter models

For the 40 and 50 series body sizes

Mounting brackets only	F module	D module	Pressure switch module	Pressure switch module		
	For connecting	For connecting (With bracket)	For connecting	For connecting (With bracket)		
	8Z-F	**8Z-D**	**8Z-PS□**	**8Z-DPS□**		
Mounting brackets + Adapter	T module	DT module	Pressure switch module	Pressure switch module	S adapter	DS adapter
	For branching	For branching (With bracket)	Piping with adapter	Piping adapter With bracket	For pipe size conversion	For pipe size conversion (With bracket)
	8Z-T□	**8Z-DT□**	**8Z-PSS□**	**8Z-DPSS□**	**8Z-S□**	**8Z-DS□**
Adapter only[Note]	Intermediate extraction block				Piping adapter	
	For branching (Standalone bracket)				For pipe size conversion (Standalone bracket)	
	8Z-TP□				**8Z-SP□**	

Note: Use when termination is mounting bracket.

Example of combination

Model: **CMZ550-CR-V-04-G1C-PSFA-T-C**

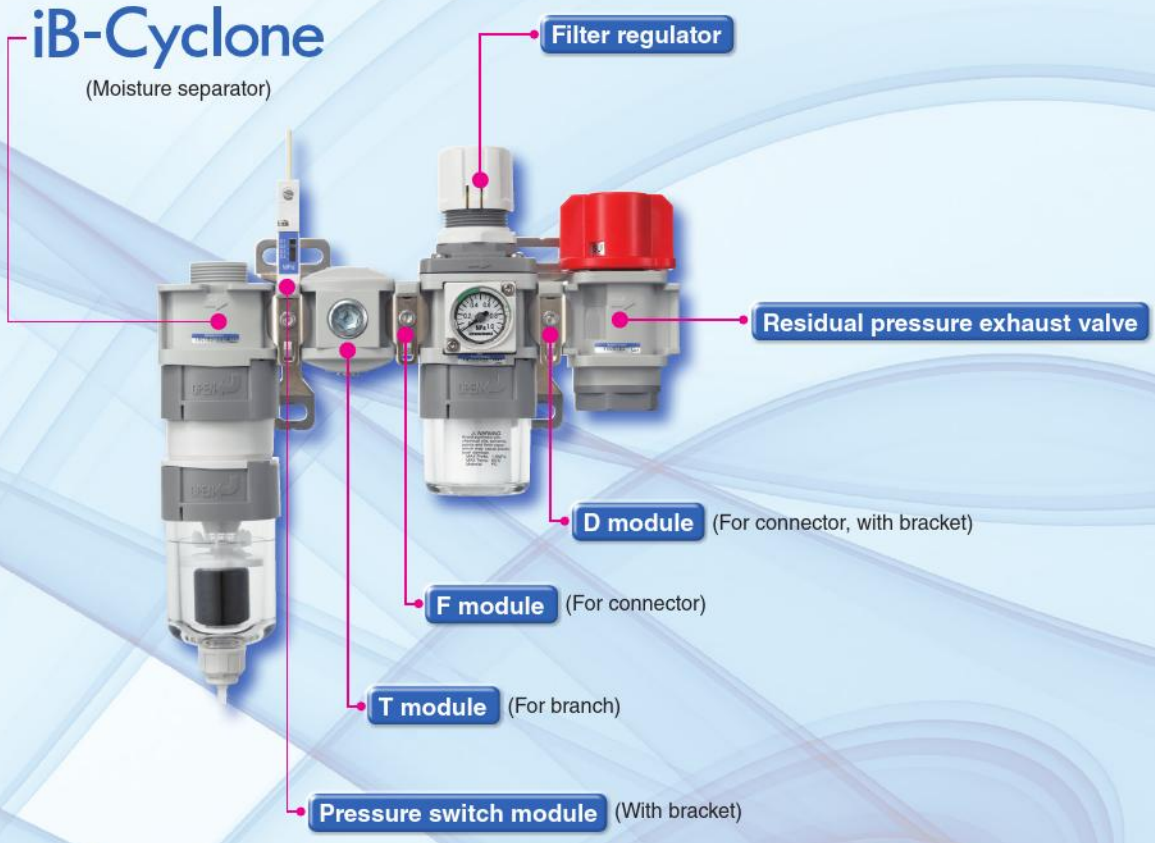

Product Index

· Safety Precautions	Page 9	
· CMZ series	Page 11	CMZ
· iB-Cyclone positive pressure specifications (Water separator)	Page 61	IBCY Positive pressure specifications
· iB-Cyclone negative pressure specifications (Water separator)	Page 73	IBCY Negative pressure specifications
· Air filter · Oil mist filter · Micro oil mist filter	Page 79	FNZ MFZ MMFZ
· FRZB filter regulator (With moisture and fluid removal functions)	Page 99	FRZB
· Filter regulator (With no moisture or fluid removal functions) · Regulator	Page 119	FRZ RZ
· Residual pressure exhaust valve	Page 141	Residual pressure exhaust valve
· Pressure switch module	Page 144	Pressure switch module
· Module · Adapter	Page 147	Module Adapter
· Bracket	Page 151	Bracket
· Pressure gauge · Digital pressure switch	Page 154	Pressure gauge
· Reference material (resistance to chemicals)	Page 162	Reference material

Always read these precautions carefully before use.

Before selecting and using products, please read all the Safety Precautions carefully to ensure proper product use.
The Safety Precautions shown below are to help you use the product safely and correctly, and to prevent injury to you or other people, or damage to property.
Follow the safety precautions for: ISO4414 (Pneumatic fluid power - General rules and safety requirements for systems and their components) and JIS B 8370 (General rules relating to pneumatic systems).

"DANGER", "WARNING", "CAUTION", "ATTENTION"

⚠ DANGER	Indicates situations that can be clearly predicted as dangerous. If the noted danger is not avoided, it could result in death or serious injury. It could also result in damage or destruction of property.
⚠ WARNING	Indicates situations that, while not immediately dangerous, could become dangerous. If the noted danger is not avoided, it could result in death or serious injury. It could also result in damage or destruction of property.
⚠ CAUTION	Indicates situations that, while not immediately dangerous, could become dangerous. If the noted danger is not avoided, it could result in minor or moderate injury. It could also result in damage or destruction of property.
⚠ ATTENTION	While there is little chance of injury, this content refers to points that should be observed for appropriate use of the product.

■ **This product was designed and manufactured as parts for use in general industrial machinery.**

■ In the selection and handling of the equipment, the system designer or other person with sufficient knowledge and experience should read the Safety Precautions, Catalog, Owner's Manual and other information before handling the equipment. Making mistakes in handling is dangerous.

■ After reading the Owner's Manual, etc., be sure to keep it where the people using the product can read it at any time.

■ If you transfer or lend the product to another person, always attach the Owner's Manual, etc., to the product where they are easily visible, to ensure that the new user can use the product safely and properly.

■ The danger, warning, and caution items listed in these "Safety Precautions" do not cover all possible cases. Read the Catalog and Owner's Manual carefully, and always keep safety first.

⚠ DANGER

● Do not use the product for the applications listed below:
1. Medical equipment related to maintenance or management of human lives or bodies.
2. Mechanical devices or equipment designed for the purpose of moving or transporting people.
3. Critical safety components in mechanical devices.

The product has not been planned or designed for applications that require advanced levels of safety. There is a possibility of loss of human life.

● Do not use the product in locations where there are flammable or combustible materials. This product is not explosion-proof. There is a risk of ignition or combustion.

● When mounting the product, be sure it is securely supported and secured (including the workpiece). If the product is dropped or falls, it could malfunction or cause injury.

● People who use a pacemaker or other similar medical device should maintain a distance of at least one meter [3.280 ft] away from the product. There is a possibility that the pacemaker will malfunction due to the strong magnet built into the product.

● Never attempt to modify the product. There is a risk of abnormal operation leading to injury, electric shock, fire, etc.

● Do not disassemble, assemble or repair the product inappropriately in relation to its basic structure, performance, or functions. Doing so could result in injury, electric shock, fire, etc.

● Do not splash water on the product. Spraying it with water, washing it, or using it underwater could result in malfunction of the product leading to injury, electric shock, fire, etc.

● Do not touch or approach the product while it is operating, except for the specified operations. Also, do not adjust any of the mechanisms (such as attaching or detaching wiring connectors, adjusting pressure switches, removing piping tubes or sealing plugs, adjusting the product's mounting position, etc.) that are built into or attached to the product while it is operating.
There is a risk of injury if the product falls or malfunctions.

⚠ WARNING

● Because Koganei products may be used under a wide variety of conditions, decisions concerning conformance with a particular system should be made after a thorough evaluation by the person in charge of system design.
The designer who determines the suitability of the system is responsible for ensuring the system's intended performance and safety. Be sure to use the latest catalogs and technical materials to thoroughly study and evaluate specification details, to consider the possibility of machine breakdown, and to configure a system that ensures safety and reliability, such as by using fail-safes.

● Do not use the product in excess of its specification range. Using the product outside of its specification range could cause the product to malfunction, stop functioning or be damaged. It could also drastically reduce its operating life.

● Before supplying air or electricity to the product and before starting operation, always conduct a safety check of the operating range of the equipment. Supplying air or electricity carelessly can result in injury from contact with moving parts.

● Do not touch the terminals or switches while the power is on. There is a possibility of electric shock or abnormal operation.

● Do not throw the product into fire. The product could explode and/or release toxic gases.

● Do not stand on the product, use it as a step, or place objects on it. Doing so may cause accidents, such as falls, injuries from the product falling or being dropped, damage to the product, malfunctions due to damage, or runaway operation, etc.

● Before conducting maintenance, inspection, repair, replacement, or any other similar procedure, always completely cut off all air and connections and check that residual pressure inside the product or in piping connected to the product is at atmospheric pressure. In particular, be aware that residual air will still be in the compressor or air tank.
If residual air pressure remains inside the piping, the actuator may move abruptly and cause an injury.

● Use safety circuits or system designs to prevent damage to machinery or injury to personnel when the machine is shut down due to an emergency stop or electrical power failure.

● Before performing any kind of wiring work, be sure to turn off the power. There is a risk of electric shock.

● Do not damage lead wires or other cords.
Allowing the cords to be damaged, bent excessively, pulled, rolled up, placed under heavy objects or squeezed between objects, can result in current leaks or defective continuity that can lead to fire, electric shock, or abnormal operation.

● Do not connect or disconnect connectors while the power is turned on. Also, never apply unnecessary stress to connectors. Doing so may cause injury, device damage, or electric shock due to abnormal machine operation.

● Always check the catalog and other reference materials for correct product wiring and piping. Incorrect wiring or piping may cause abnormal operation of the actuator.

● After completing wiring work, check the wiring for errors before turning on the power.

● After completing piping work, check the circuit for errors before supplying air.

● Do not use any medium other than those listed in the specifications table. Using a medium other than those in the specifications table may lead to early shutdown of some functions, a sudden degradation of performance, or a reduced operating life.

● If the device has been idle for over 48 hours or has been in storage, then when it is used for the first time, sliding parts may stick, causing the device to move slowly or suddenly. For these initial operations, always run a test operation to confirm that operations are normal.

- Do not use the product in locations subject to direct sunlight (ultraviolet rays), high temperatures and humidity, dust, salt, or iron powder, or where the medium being used, or the atmosphere, contains corrosive fluids, such as organic solvents, phosphate ester type hydraulic oil, sulfur dioxide gas, chlorine gas, CFC gas, ozone, acids, or alkalis. It could lead to early shutdown of some functions, a sudden degradation of performance, or a reduced operating life. For information about materials, see Major Parts and Materials.
- If the device is used infrequently (over 30 days), then the sliding parts may stick, causing the device to move slowly or suddenly, which could result in injury. Check for proper operation a minimum of once every 30 days.
- Do not use a pressure switch or the wiring that controls it in locations subject to surges or near strong magnetic fields or power lines through which large electric currents flow. It could result in unintended operation.
- Do not use the product near the ocean in direct sunlight, near mercury vapor, or near equipment that generates ozone. Deterioration of rubber parts caused by ozone may reduce performance and functions or stop functions.
- Do not use the product where there is a heat source nearby or where it is subject to radiated heat.

⚠ CAUTION

- When installing the product, be sure to allow adequate working space around it. Failure to ensure adequate working space will make it more difficult to conduct daily inspections or maintenance, which could eventually lead to system shutdown or damage to the product.
- When transporting or mounting a heavy product, firmly support the product using a lift or support, or use multiple people to ensure personal safety.
- Do not scratch, dent, or deform the product by standing on it, using it as a step, or placing objects on top of it. Doing so may cause the product to stop working or reduce its performance due to damage or breakage.
- Always post a "Work in Progress" sign for installations, adjustments, or other operations, to avoid unintentional supplying of air or electrical power, etc. Supplying air or electric power carelessly can result in electric shock or injury due to a sudden operation.
- When handling the product, take care to avoid dropping it, allowing it to come into contact with other objects, or otherwise subjecting it to excessive impact. Even if the exterior of the product appears undamaged, damage to internal components can cause abnormal operation.
- Do not short-circuit the load to a pressure switch.
  If the comparative output is turned on while the load is short-circuited, the pressure switch may be damaged by an excess of current.
  Example of load short-circuit: Connecting the comparative output lead directly to the power supply.
- Do not bring floppy disks or magnetic media, etc., within 1 meter [3.280 ft.] of the product. Some products have powerful internal magnets, and the magnetic data on magnetic media may be destroyed by the magnetism.
- Depending on the product, unintended operations may occur when a leakage current occurs in the control circuit. Use countermeasures for circuit leakages in the control circuit so as not to exceed the allowable leakage current values for the product's specifications.
- Use the specified lubrication when lubricating the sliding parts. Not doing this leads to changes in the physical properties and deterioration of the materials used, resulting in reduced functionality.
- Do no obstruct the product's breather. Pressure fluctuations occur depending on the volume changes during operation. Blocking the breather will disrupt the pressure balance, preventing the intended operation and causing injury or damage to the device.
- Using extremely dry air with a dew point lower than -20°C [-4°F] may affect the quality of the lubricating oil used. This may cause degraded performance or loss of functions.

⚠ ATTENTION

- When considering the possibility of using this product in situations or environments not specifically noted in the Catalog or Instruction Manual, or in applications where safety is an important requirement such as in an aircraft facility, combustion equipment, leisure equipment, safety equipment and other places where human life or assets may be greatly affected, take adequate safety precautions such as allowing for sufficient safety margins for ratings and performance, and fail-safe measures. Be sure to consult us about such applications.
- Moving parts of machinery should be isolated with protective covers so as not to come into direct contact with human bodies.
- Do not configure controls in such a way as would allow workpieces to fall if power fails.
  Configure the controls to prevent workpieces, etc., from falling if the machinery stops during an emergency stop or power outage.
- Install a noise eliminator (such as mufflers) in the exhaust port.
  Doing so reduces noise during exhaust.
- After adjusting the pressure, lock the pressure adjustment handle.
- When handling the product, be safe by wearing protective gloves, safety glasses, safety shoes, and other protective clothing as necessary.
- When the product can no longer be used, or is no longer necessary, dispose of it appropriately as industrial waste.
- The performance and functions of pneumatic equipment may deteriorate over time. Inspect the pneumatic equipment every day to confirm that it is fulfilling the functions required by the system, and to prevent accidents from occurring.
- Air leakage from the product is not zero. For applications, such as maintaining pressure (including vacuum) inside pressure vessels, design your system with consideration for the required capacity and holding time.
- For inquiries about the product, contact your nearest Koganei sales office or Koganei overseas department. The address and telephone number are shown on the back cover of this catalog.

⚠ OTHERS

- Always observe the following items.
  1. When using this product in pneumatic systems, always use genuine KOGANEI parts or compatible parts (recommended parts).
     When conducting maintenance or repairs, always use genuine KOGANEI parts or compatible parts (recommended parts).
     Always observe the required methods and procedures.
  2. Do not inappropriately disassemble or assemble the product as relates to basic configurations, and its performance or functions.

Koganei cannot be responsible if these items are not properly observed.

Warranty and General Disclaimer

1. Warranty Period
The warranty period for Koganei products is 12 months from the date of delivery.

2. Scope of Warranty and General Disclaimer

(1) The Koganei product warranty covers individual products. When a product purchased from Koganei or from an authorized Koganei distributor or agent malfunctions during the warranty period in a way that is attributable to Koganei's responsibility, Koganei will repair or replace the product free of charge. Even if a product is still within the warranty period, its durability is determined by its operation cycles and other factors. Contact your nearest Koganei sales office or the Koganei overseas department for details.

(2) Koganei is not responsible for any losses or for any damages to other machinery caused by breakdown, loss of function, or loss of performance of Koganei products.

(3) Koganei is not responsible for any losses due to use or storage of the product in a way that is outside of the product specifications prescribed in Koganei catalogs and instruction manuals, and/or due to actions that violate the mounting, installation, adjustment, maintenance or other safety precautions.

(4) Koganei is not responsible for any losses caused by breakdown of the product due to factors outside the responsibility of Koganei, including but not limited to fire, natural disaster, the actions of third parties, and intentional actions or errors by the purchaser.

New Generation Air Treatment Combinations

CMZ series

Leave your air treatment combination needs to Koganei.

Four types of combinations are available to suit your needs. Selectable from a variety of combinations for each type.

Improved oil resistance PCT resin bowl (option)

Improved resistance to cutting oil and alcohol
See page 162 for resistance test results
* PCT: Polycyclohexylene-dimethylene terephthalate

1-Combination type selection

Choose from 4 types according to your intended use.

Standard Combination

CMZA

General Industrial Equipment Applications

- **Regulator based combinations**
- **Filter and regulator are mounted separately**
- **Widest range of combinations**
- **Can be used with various air qualities**

Compact Combination

CMZB

General Industrial Equipment Applications

Space saving

- **Filter regulator based combinations**
- **Overall length (face to face) more compact than CMZA**

High-End Compact Combinations

CMZ

Space-Saving & Compact

End-of-Line Applications

- **Compact filter regulator based combinations**
- **Suitable for final air treatment and pressure adjustment in lines with relatively clean primary side air quality**

Filter Combinations

CMZF

Air Treatment

- **Filter combinations specialized for air treatment**
- **Combinations available to suit any desired air quality**

CAUTION **Read the safety precautions on page 9 before using this product.**

2-Combination component selection

Select the components for your combination.

Page 16 for details

Standard Combination CMZA440•550

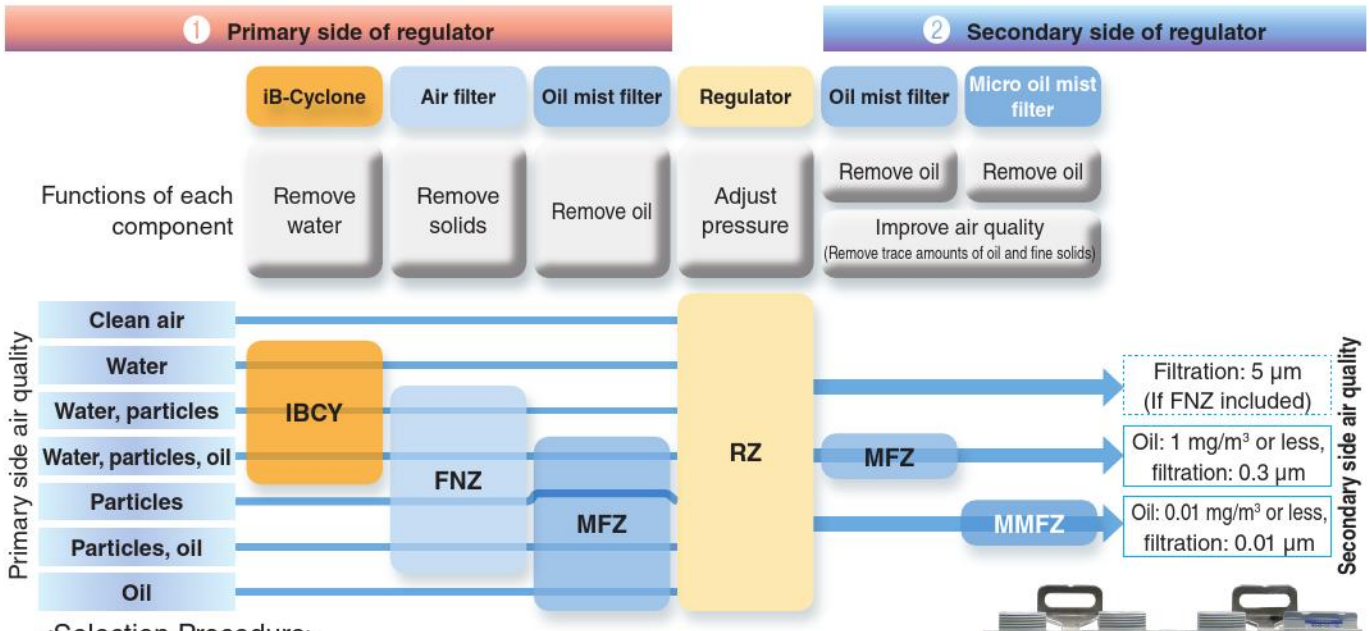

<Selection Procedure>

1. Check your primary side air quality
2. Check the required secondary side air quality
3. Decide on components needed to satisfy conditions in 1 and 2

3 Decide on components

iB-Cyclone	IBCY	C
Air filter	FNZ	F
Oil mist filter	MFZ	M
Micro oil mist filter	MMFZ	D
Regulator	RZ	R

CMZA440−CFMR−□

Component model code

Recommended **CMZA440−CFMR−□−G1C−□PG**

Component model code	Component					Water	Solids		Oil
						Separation rate	Filtration (µm)	Trapping efficiency (%)	Secondary oil mist concentration (mg/m³)
C F R	IBCY	FNZ	–	RZ	–	99% or more (under rated conditions)	5	–	–
C F R M	IBCY	FNZ	–	RZ	MFZ		0.3	99.9	1.0 or less
C F R D	IBCY	FNZ	–	RZ	MMFZ		0.01	99.9999	0.01 or less
C F M R	IBCY	FNZ	MFZ	RZ	–		0.3	99.9	1.0 or less Note 1
C F M R M	IBCY	FNZ	MFZ	RZ	MFZ				1.0 or less
C F M R D	IBCY	FNZ	MFZ	RZ	MMFZ		0.01	99.9999	0.01 or less
C R	IBCY	–	–	RZ	–		–	–	–
C R M	IBCY	–	–	RZ	MFZ		0.3	99.9	1.0 or less
C R D	IBCY	–	–	RZ	MMFZ		0.01	99.9999	0.01 or less
F R	–	FNZ	–	RZ	–	–	5	–	–
F R M	–	FNZ	–	RZ	MFZ		0.3	99.9	1.0 or less
F R D	–	FNZ	–	RZ	MMFZ		0.01	99.9999	0.01 or less
F M R	–	FNZ	MFZ	RZ	–		0.3	99.9	1.0 or less Note 1
F M R M	–	FNZ	MFZ	RZ	MFZ				1.0 or less
F M R D	–	FNZ	MFZ	RZ	MMFZ		0.01	99.9999	0.01 or less
M R	–	–	MFZ	RZ	–		0.3	99.9	1.0 or less Note 1
M R M	–	–	MFZ	RZ	MFZ				1.0 or less
M R D	–	–	MFZ	RZ	MMFZ		0.01	99.9999	0.01 or less
R M	–	–	–	RZ	MFZ		0.3	99.9	1.0 or less
R D	–	–	–	RZ	MMFZ		0.01	99.9999	0.01 or less

Note 1: This does not take into account grease spattering from the secondary-side terminal regulator of the components.

Page 33 for details

Compact Combination CMZB440•550

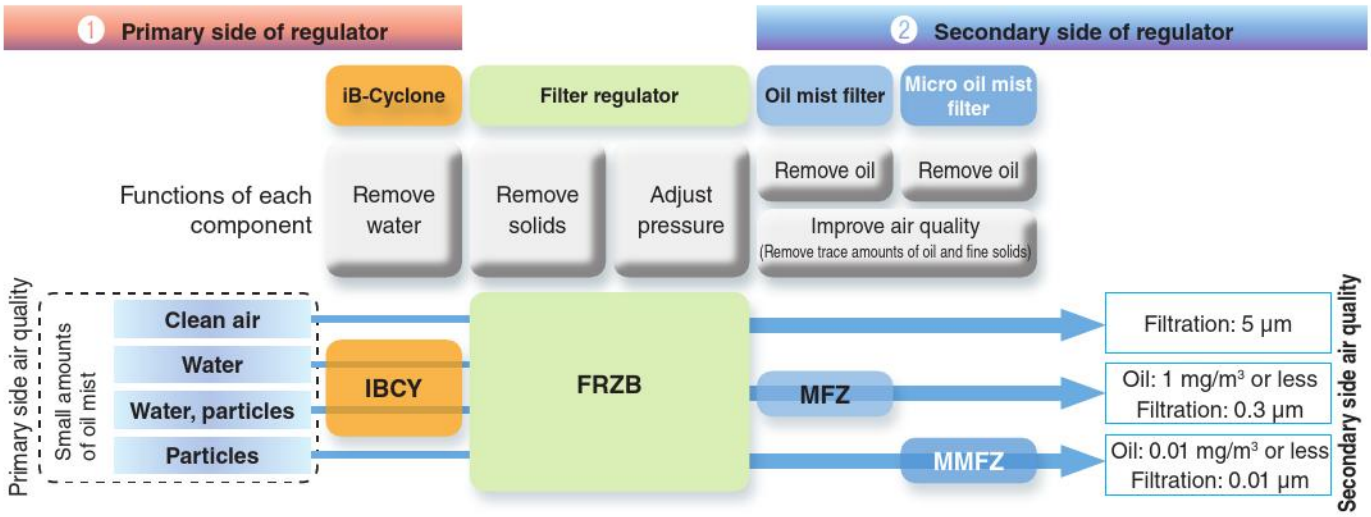

<Selection Procedure>

1. Check your primary side air quality
2. Check the required secondary side air quality
3. Decide on components needed to satisfy conditions in 1 and 2

CMZB440−RM−□−G1C−□PG

Component model code

3 Decide on components

iB-Cyclone	IBCY	C
Oil mist filter	MFZ	M
Micro oil mist filter	MMFZ	D
Filter regulator (with drain cock)	FRZB	R

Recommended **CMZB440−RM−□−G1C−□PG**

Component model code	Component			Water	Solids		Oil
				Separation rate	Filtration (μm)	Particle filtering efficiency (%)	Secondary oil mist concentration (mg/m³)
C R	IBCY	FRZB	–	99% or more (under rated conditions)	5	–	–
C R M	IBCY	FRZB	MFZ		0.3	99.9	1.0 or less
C R D	IBCY	FRZB	MMFZ		0.01	99.9999	0.01 or less
R M	–	FRZB	MFZ	–	0.3	99.9	1.0 or less
R D	–	FRZB	MMFZ		0.01	99.9999	0.01 or less

CAUTION Read the safety precautions on page 9 before using this product.

Page 43 for details

High-End Compact Combinations CMZ44□•54□•55□

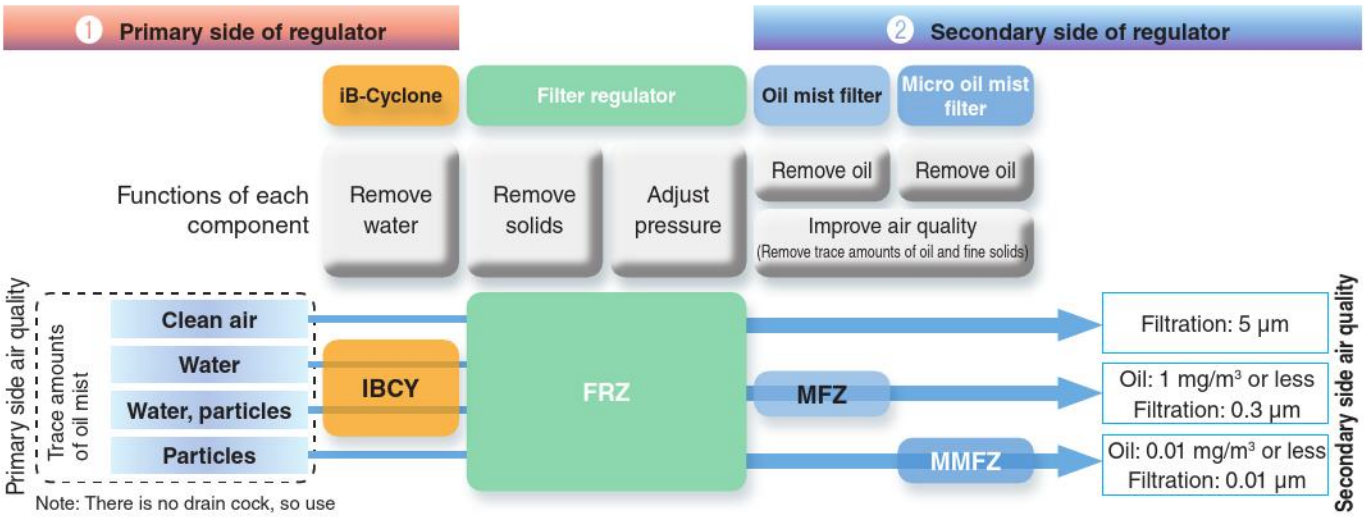

Note: There is no drain cock, so use relatively clean air quality on the primary side.

<Selection Procedure>

1. Check your primary side air quality
2. Check the required secondary side air quality
3. Decide on components needed to satisfy conditions in 1 and 2

CMZ440—CRM—□—G1C—□

Component model code

3 Decide on components

iB-Cyclone	IBCY	C
Oil mist filter	MFZ	M
Micro oil mist filter	MMFZ	D
Filter regulator (no drain cock)	FRZ	R

Recommended **CMZ440—RM—□—G1C-□**

Recommended **CMZ440—CRM—□—G1C-□**

Component model code	Component			Water: Separation rate	Solids: Filtration (μm)	Solids: Particle filtering efficiency (%)	Oil: Secondary oil mist concentration (mg/m³)
C R	IBCY	FRZ	–	99% or more (under rated conditions)	5	–	–
C R M	IBCY	FRZ	MFZ		0.3	99.9	1.0 or less
C R D	IBCY	FRZ	MMFZ		0.01	99.9999	0.01 or less
R M	–	FRZ	MFZ	–	0.3	99.9	1.0 or less
R D	–	FRZ	MMFZ		0.01	99.9999	0.01 or less

Note: If the code for the combination is left [Blank], it will be the same product as [CR].

Page 54 for details

Filter Combinations CMZF400•500

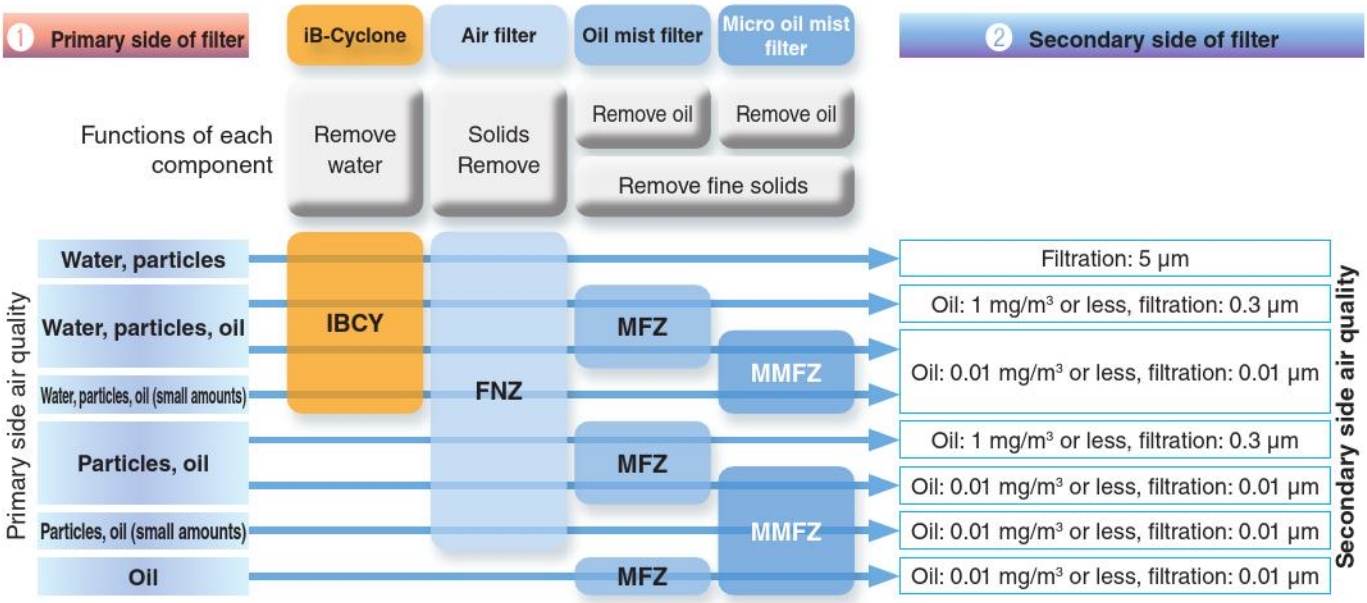

<Selection Procedure>

1. Check your primary side air quality
2. Check the required secondary side air quality
3. Decide on components needed to satisfy conditions in 1 and 2

CMZF500—CFMD—□—□PG

Component model code

3 Decide on components

iB-Cyclone	IBCY	C
Air filter	FNZ	F
Oil mist filter	MFZ	M
Micro oil mist filter	MMFZ	D

Recommended CMZF500—CFMD—□—□PG

Component model code	Component				Water: Separation rate	Solids: Filtration (μm)	Solids: Trapping efficiency (%)	Oil: Secondary oil mist concentration (mg/m³)
C F	IBCY	FNZ	–	–	99% or more (under rated conditions)	5	–	–
C F M	IBCY	FNZ	MFZ	–		0.3	99.9	1.0 or less
C F D	IBCY	FNZ	–	MMFZ		0.01	99.9999	0.01 or less
C F M D	IBCY	FNZ	MFZ	MMFZ				
F M	–	FNZ	MFZ	–	–	0.3	99.9	1.0 or less
F D	–	FNZ	–	MMFZ		0.01	99.9999	0.01 or less
F M D	–	FNZ	MFZ	MMFZ				
M D	–	–	MFZ	MMFZ				

CAUTION Read the safety precautions on page 9 before using this product.

CMZA

Standard Combination

Specifications

Model		CMZA440	CMZA550
Media		Air	
Port size	Rc	1/4, 3/8	1/4, 3/8, 1/2
Maximum operating pressure	MPa	1.0	
Proof pressure	MPa	1.5	
Operating pressure range	MPa	0.05 to 0.85	
Operating temperature range (atmospheric and medium)	°C	5 to 60 (medium must not freeze)	

Specifications by component

● CMZA440/CMZA550

Component model code		CFR		CFRM		CFRD		CFMR		CFMRM		CFMRD	
Combination type		CMZA440	CMZA550	CMZA440	CMZA550	CMZA440	CMZA550	CMZA440	CMZA550	CMZA440	CMZA550	CMZA440	CMZA550
Component combinations		IBCY40	IBCY50	IBCY40	IBCY50	IBCY40	IBCY50	IBCY40	IBCY50	IBCY40	IBCY50	IBCY40	IBCY50
		FNZ40	FNZ50	FNZ40	FNZ50	FNZ40	FNZ50	FNZ40	FNZ50	FNZ40	FNZ50	FNZ40	FNZ50
		—		—		—		MFZ40	MFZ50	MFZ40	MFZ50	MFZ40	MFZ50
		RZ40	RZ50	RZ40	RZ50	RZ40	RZ50	RZ40	RZ50	RZ40	RZ50	RZ40	RZ50
		—		MFZ40	MFZ50	MMFZ40	MMFZ50	—		MFZ40	MFZ50	MMFZ40	MMFZ50
Water separation rate	%	99 or more (under rated conditions)											
Filtration	μm	5		0.3		0.01		0.3		0.3		0.01	
Particle filtering efficiency	%	—		99.9		99.9999		99.9		99.9		99.9999	
Secondary oil mist concentration[Note 1]	mg/m³	—		1.0 or less		0.01 or less		1.0 or less[Note 3]		1.0 or less		0.01 or less	
Maximum flow rate[Note 2]	L/min (ANR)	1400	2250	300	750	150	400	300	750	300	750	150	400
Weight	kg	0.71	0.98	0.95	1.32	0.95	1.32	0.95	1.32	1.19	1.66	1.19	1.66

Component model code		CR		CRM		CRD		FR		FRM		FRD	
Combination type		CMZA440	CMZA550	CMZA440	CMZA550	CMZA440	CMZA550	CMZA440	CMZA550	CMZA440	CMZA550	CMZA440	CMZA550
Component combinations		IBCY40	IBCY50	IBCY40	IBCY50	IBCY40	IBCY50	—		—		—	
		—		—		—		FNZ40	FNZ50	FNZ40	FNZ50	FNZ40	FNZ50
		RZ40	RZ50	RZ40	RZ50	RZ40	RZ50	RZ40	RZ50	RZ40	RZ50	RZ40	RZ50
		—		MFZ40	MFZ50	MMFZ40	MMFZ50	—		MFZ40	MFZ50	MMFZ40	MMFZ50
Water separation rate	%	99 or more (under rated conditions)						—					
Filtration	μm	—		0.3		0.01		5		0.3		0.01	
Particle filtering efficiency	%	—		99.9		99.9999		—		99.9		99.9999	
Secondary oil mist concentration[Note 1]	mg/m³	—		1.0 or less		0.01 or less		—		1.0 or less		0.01 or less	
Maximum flow rate[Note 2]	L/min (ANR)	1500	2600	300	750	150	400	1600	2600	300	750	150	400
Weight	kg	0.44	0.61	0.71	0.98	0.71	0.98	0.44	0.61	0.71	0.98	0.71	0.98

Component model code		FMR		FMRM		FMRD		MR		MRM		MRD	
Combination type		CMZA440	CMZA550	CMZA440	CMZA550	CMZA440	CMZA550	CMZA440	CMZA550	CMZA440	CMZA550	CMZA440	CMZA550
Component combinations		FNZ40	FNZ50	FNZ40	FNZ50	FNZ40	FNZ50	—		—		—	
		MFZ40	MFZ50	MFZ40	MFZ50	MFZ40	MFZ50	MFZ40	MFZ50	MFZ40	MFZ50	MFZ40	MFZ50
		RZ40	RZ50	RZ40	RZ50	RZ40	RZ50	RZ40	RZ50	RZ40	RZ50	RZ40	RZ50
		—		MFZ40	MFZ50	MMFZ40	MMFZ50	—		MFZ40	MFZ50	MMFZ40	MMFZ50
Filtration	μm	0.3		0.3		0.01		0.3		0.3		0.01	
Particle filtering efficiency	%	99.9		99.9		99.9999		99.9		99.9		99.9999	
Secondary oil mist concentration[Note 1]	mg/m³	1.0 or less[Note 3]		1.0 or less		0.01 or less		1.0 or less[Note 3]		1.0 or less		0.01 or less	
Maximum flow rate[Note 2]	L/min (ANR)	300	750	300	750	150	400	300	750	300	750	150	400
Weight	kg	0.71	0.98	0.95	1.32	0.95	1.32	0.44	0.61	0.71	0.98	0.71	0.98

Component model code		RM		RD	
Combination type		CMZA440	CMZA550	CMZA440	CMZA550
Component combinations		RZ40	RZ50	RZ40	RZ50
		MFZ40	MFZ50	MMFZ40	MMFZ50
Filtration	μm	0.3		0.01	
Particle filtering efficiency	%	99.9		99.9999	
Secondary oil mist concentration[Note 1]	mg/m³	1.0 or less		0.01 or less	
Maximum flow rate[Note 2]	L/min (ANR)	300	750	150	400
Weight	kg	0.44	0.61	0.44	0.61

Note 1: Value when the primary-side oil mist concentration is 30 mg/m³.
2: Value when the primary-side pressure is 0.7 MPa and regulator set pressure is 0.6 MPa.
3: This does not take into account grease spattering from the secondary-side terminal regulator of the components.
4: Ensure that the supply pressure is above 0.15 MPa if auto drain is selected as an option. (Supply pressure is needed to operate the auto drain.)
5: For details about each combined component, refer to the page for that product in this catalog.
6: Use a PCT resin bowl when using products in a location with a poor atmosphere (places with a risk of exposure to cutting oil, machine oil, etc.).

CMZA

Standard Combination

Specifications

Model		CMZA440	CMZA550
Media		Air	
Port size	Rc	1/4, 3/8	1/4, 3/8, 1/2
Maximum operating pressure	psi	145	
Proof pressure	psi	218	
Operating pressure range	psi	7 to 123	
Operating temperature range (atmospheric and medium)	°F	41 to 140 (medium must not freeze)	

Specifications by component

● CMZA440/CMZA550

Component model code		CFR		CFRM		CFRD		CFMR		CFMRM		CFMRD	
Combination type		CMZA440	CMZA550	CMZA440	CMZA550	CMZA440	CMZA550	CMZA440	CMZA550	CMZA440	CMZA550	CMZA440	CMZA550
Component combinations		IBCY40	IBCY50	IBCY40	IBCY50	IBCY40	IBCY50	IBCY40	IBCY50	IBCY40	IBCY50	IBCY40	IBCY50
		FNZ40	FNZ50	FNZ40	FNZ50	FNZ40	FNZ50	FNZ40	FNZ50	FNZ40	FNZ50	FNZ40	FNZ50
		—		—		—		MFZ40	MFZ50	MFZ40	MFZ50	MFZ40	MFZ50
		RZ40	RZ50	RZ40	RZ50	RZ40	RZ50	RZ40	RZ50	RZ40	RZ50	RZ40	RZ50
		—		MFZ40	MFZ50	MMFZ40	MMFZ50	—		MFZ40	MFZ50	MMFZ40	MMFZ50
Water separation rate	%	99 or more (under rated conditions)											
Filtration	μm	5		0.3		0.01		0.3		0.3		0.01	
Particle filtering efficiency	%	—		99.9		99.9999		99.9		99.9		99.9999	
Secondary oil mist concentration[Note 1]	mg/m³	—		1.0 or less		0.01 or less		1.0 or less[Note 3]		1.0 or less		0.01 or less	
Maximum flow rate[Note 2]	ft³/min (SCFM)	49.448	79.470	10.596	26.490	5.298	14.128	10.596	26.490	10.596	26.490	5.298	14.128
Weight	lb	1.566	2.161	2.095	2.911	2.095	2.911	2.095	2.911	2.624	3.660	2.624	3.660

Component model code		CR		CRM		CRD		FR		FRM		FRD	
Combination type		CMZA440	CMZA550	CMZA440	CMZA550	CMZA440	CMZA550	CMZA440	CMZA550	CMZA440	CMZA550	CMZA440	CMZA550
Component combinations		IBCY40	IBCY50	IBCY40	IBCY50	IBCY40	IBCY50	—		—		—	
		—		—		—		FNZ40	FNZ50	FNZ40	FNZ50	FNZ40	FNZ50
		RZ40	RZ50	RZ40	RZ50	RZ40	RZ50	RZ40	RZ50	RZ40	RZ50	RZ40	RZ50
		—		MFZ40	MFZ50	MMFZ40	MMFZ50	—		MFZ40	MFZ50	MMFZ40	MMFZ50
Water separation rate	%	99 or more (under rated conditions)						—					
Filtration	μm	—		0.3		0.01		5		0.3		0.01	
Particle filtering efficiency	%	—		99.9		99.9999		—		99.9		99.9999	
Secondary oil mist concentration[Note 1]	mg/m³	—		1.0 or less		0.01 or less		—		1.0 or less		0.01 or less	
Maximum flow rate[Note 2]	ft³/min (SCFM)	52.980	91.832	10.596	26.490	5.298	14.128	56.512	91.832	10.596	26.490	5.298	14.128
Weight	lb	0.970	1.345	1.566	2.161	1.566	2.161	0.970	1.345	1.566	2.161	1.566	2.161

Component model code		FMR		FMRM		FMRD		MR		MRM		MRD	
Combination type		CMZA440	CMZA550	CMZA440	CMZA550	CMZA440	CMZA550	CMZA440	CMZA550	CMZA440	CMZA550	CMZA440	CMZA550
Component combinations		FNZ40	FNZ50	FNZ40	FNZ50	FNZ40	FNZ50	—		—		—	
		MFZ40	MFZ50	MFZ40	MFZ50	MFZ40	MFZ50	MFZ40	MFZ50	MFZ40	MFZ50	MFZ40	MFZ50
		RZ40	RZ50	RZ40	RZ50	RZ40	RZ50	RZ40	RZ50	RZ40	RZ50	RZ40	RZ50
		—		MFZ40	MFZ50	MMFZ40	MMFZ50	—		MFZ40	MFZ50	MMFZ40	MMFZ50
Filtration	μm	0.3		0.3		0.01		0.3		0.3		0.01	
Particle filtering efficiency	%	99.9		99.9		99.9999		99.9		99.9		99.9999	
Secondary oil mist concentration[Note 1]	mg/m³	1.0 or less[Note 3]		1.0 or less		0.01 or less		1.0 or less[Note 3]		1.0 or less		0.01 or less	
Maximum flow rate[Note 2]	ft³/min (SCFM)	10.596	26.490	10.596	26.490	5.298	14.128	10.596	26.490	10.596	26.490	5.298	14.128
Weight	lb	1.566	2.161	2.095	2.911	2.095	2.911	0.970	1.345	1.566	2.161	1.566	2.161

Component model code		RM		RD	
Combination type		CMZA440	CMZA550	CMZA440	CMZA550
Component combinations		RZ40	RZ50	RZ40	RZ50
		MFZ40	MFZ50	MMFZ40	MMFZ50
Filtration	μm	0.3		0.01	
Particle filtering efficiency	%	99.9		99.9999	
Secondary oil mist concentration[Note 1]	mg/m³	1.0 or less		0.01 or less	
Maximum flow rate[Note 2]	ft³/min (SCFM)	10.596	26.490	5.298	14.128
Weight	lb	0.970	1.345	0.970	1.345

Note 1: Value when the primary-side oil mist concentration is 30 mg/m³.
2: Value when the primary-side pressure is 102 psi and regulator set pressure is 87 psi.
3: This does not take into account grease spattering from the secondary-side terminal regulator of the components.
4: Ensure that the supply pressure is above 22 psi if auto drain is selected as an option. (Supply pressure is needed to operate the auto drain.)
5: For details about each combined component, refer to the page for that product in this catalog.
6: Use a PCT resin bowl when using products in a location with a poor atmosphere (places with a risk of exposure to cutting oil, machine oil, etc.).

● Standard Combination

CMZA □ **0** – □ – □ – □ – □ – □ □ – □ – □ – □

Direction of flow
Blank —— Specifications (left to right)
R —— Reverse flow (right to left)

Bowl specifications
APG —— Auto drain N.O. + With bowl guard
CPG —— Auto drain N.C. + With bowl guard
NPG —— Drain cock with fitting + With bowl guard
PAPG —— PCTResin bowl + Auto drain N.O. + With bowl guard
PCPG —— PCTResin bowl + Auto drain N.C. + With bowl guard
PNPG —— PCTResin bowl + Drain cock with fitting + With bowl guard
*** IBCY, FNZ, MFZ, MMFZ have the same specifications.**

Lead wire length
B —— 3000 mm [118.1 in.]

Pressure switch module*
Blank —— None
PSF —— Just before regulator
PSR —— Just after regulator
The length of lead wires must be selected.
* Pressure switch modules have a pressure setting range of 0.1 to 0.4 MPa [15 to 58 psi]. Check the control method before selection. See page 144 for details about specifications.

T module
Blank —— None
T —— Just before regulator
* For models with pressure switch module (PSF), installation is between the switch and the regulator.

Pressure gauge specifications
Blank —— No pressure gauge (with pressure gauge connection port, Rc1/4)
G1C —— 1 MPa [145 psi] specifications, □30 [1.181] integrated pressure gauge
GS6 —— 1 MPa [145 psi] specifications, digital pressure switch

Port size
02 —— Rc1/4
03 —— Rc3/8
04 —— Rc1/2 (only CMZA550 can be selected)

Residual pressure exhaust valve
Blank —— None
V —— With residual pressure exhaust valve (installed at secondary-side terminal)

Component

Code		Component				
CFR	–	IBCY	FNZ	—	RZ	—
CFRM	–	IBCY	FNZ	—	RZ	MFZ
CFRD	–	IBCY	FNZ	—	RZ	MMFZ
CFMR	–	IBCY	FNZ	MFZ	RZ	—
CFMRM	–	IBCY	FNZ	MFZ	RZ	MFZ
CFMRD	–	IBCY	FNZ	MFZ	RZ	MMFZ
CR	–	IBCY	—	—	RZ	—
CRM	–	IBCY	—	—	RZ	MFZ
CRD	–	IBCY	—	—	RZ	MMFZ
FR	–	—	FNZ	—	RZ	—
FRM	–	—	FNZ	—	RZ	MFZ
FRD	–	—	FNZ	—	RZ	MMFZ
FMR	–	—	FNZ	MFZ	RZ	—
FMRM	–	—	FNZ	MFZ	RZ	MFZ
FMRD	–	—	FNZ	MFZ	RZ	MMFZ
MR	–	—	—	MFZ	RZ	—
MRM	–	—	—	MFZ	RZ	MFZ
MRD	–	—	—	MFZ	RZ	MMFZ
RM	–	—	—	—	RZ	MFZ
RD	–	—	—	—	RZ	MMFZ

Body size

Code		IBCY·FNZ·MFZ·MMFZ body size	RZ body size
44	–	40 size	40 size
55	–	50 size	50 size

CMZA —— Standard Combination

* These graphs show the maximum pipe diameters.

● CMZA440-[CR] [FR] [CFR]

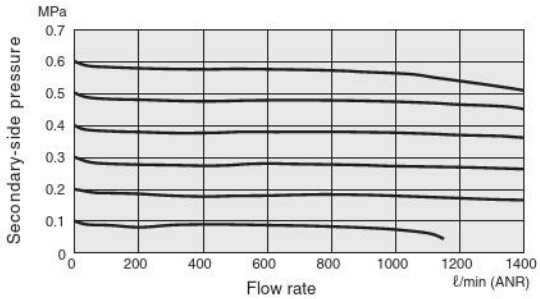

● CMZA550-[CR] [FR] [CFR]

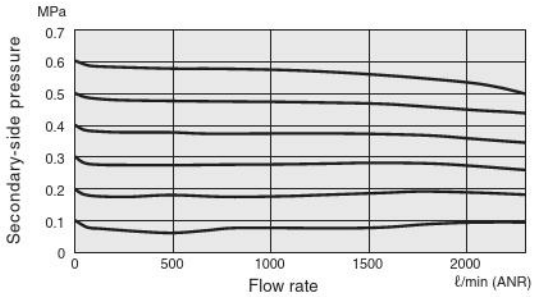

● CMZA440-[MR] [FMR] [CFMR] [CRM] [FRM] [MRM] [CFRM] [FMRM] [CFMRM] [RM]

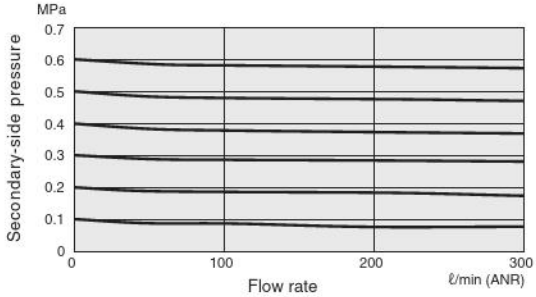

● CMZA550-[MR] [FMR] [CFMR] [CRM] [FRM] [MRM] [CFRM] [FMRM] [CFMRM] [RM]

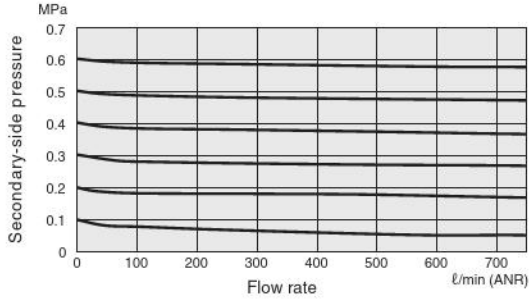

● CMZA440-[CRD] [FRD] [MRD] [CFRD] [FMRD] [CFMRD] [RD]

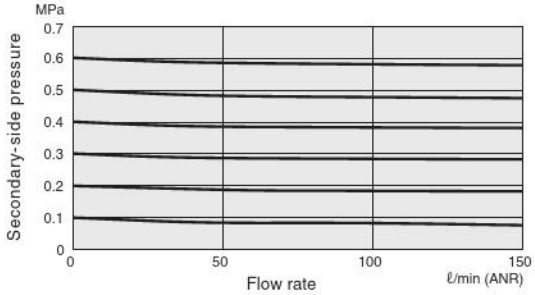

● CMZA550-[CRD] [FRD] [MRD] [CFRD] [FMRD] [CFMRD] [RD]

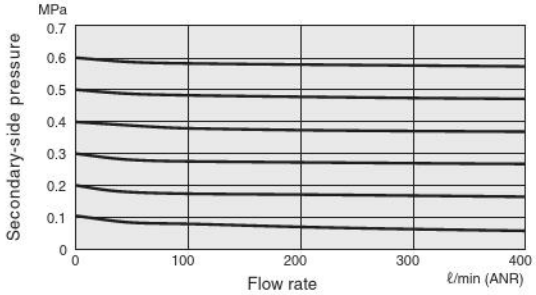

● CMZA440-[CR] [FR] [MR]
● CMZA550-[CR] [FR] [MR]

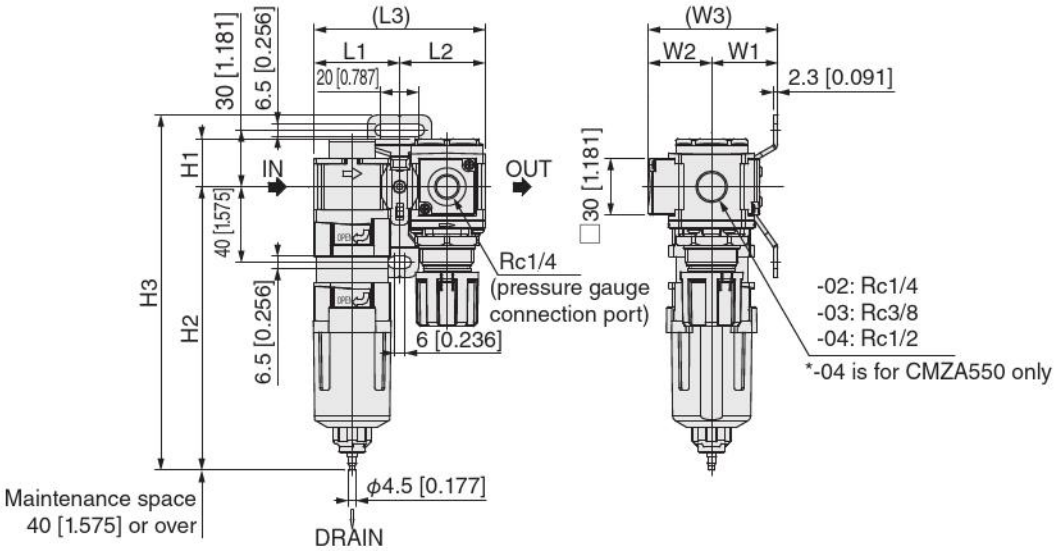

Combination type	L1	L2	L3	H1	H2	H3	W1	W2	W3
CMZA440	45.1 [1.776]	45.1 [1.776]	90.2 [3.551]	25.5 [1.004]	150 [5.906]	188 [7.402]	35 [1.378]	33.5 [1.319]	68.5 [2.697]
CMZA550	55.1 [2.169]	55.1 [2.169]	110.2 [4.339]	29 [1.142]	166 [6.535]	204 [8.031]	35 [1.378]	35 [1.378]	70 [2.756]

● CMZA440-[CFR] [FMR]
● CMZA550-[CFR] [FMR]

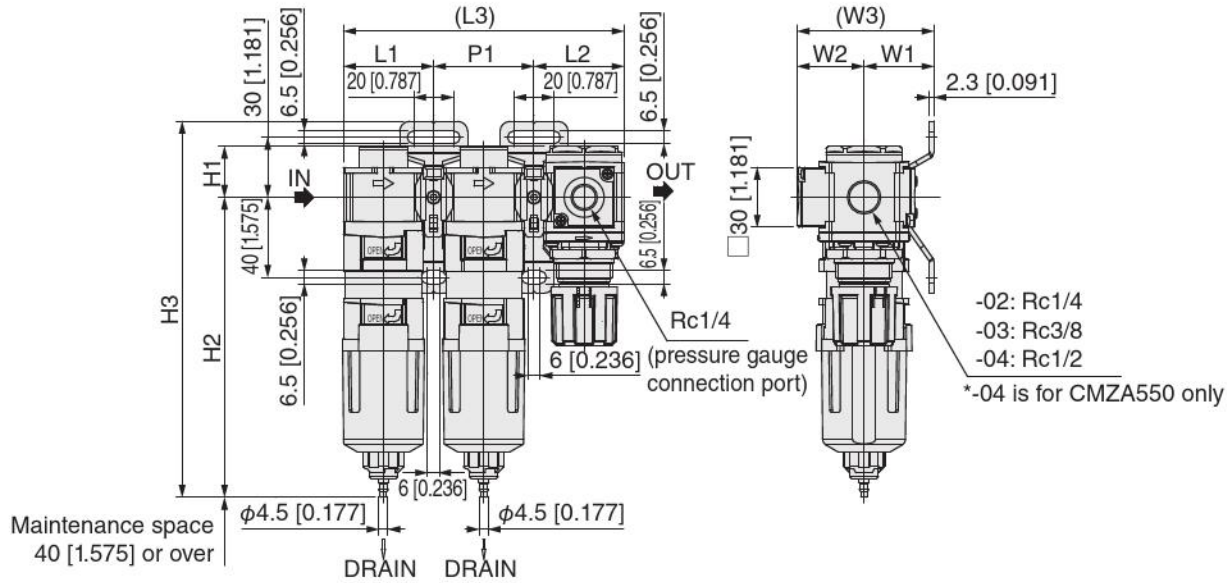

Combination type	L1	L2	L3	P1	H1	H2	H3	W1	W2	W3
CMZA440	45.1 [1.776]	45.1 [1.776]	140.4 [5.528]	50.2 [1.976]	25.5 [1.004]	150 [5.906]	188 [7.402]	35 [1.378]	33.5 [1.319]	68.5 [2.697]
CMZA550	55.1 [2.169]	55.1 [2.169]	170.4 [6.709]	60.2 [2.370]	29 [1.142]	166 [6.535]	204 [8.031]	35 [1.378]	35 [1.378]	70 [2.756]

● CMZA440-[CFMR]
● CMZA550-[CFMR]

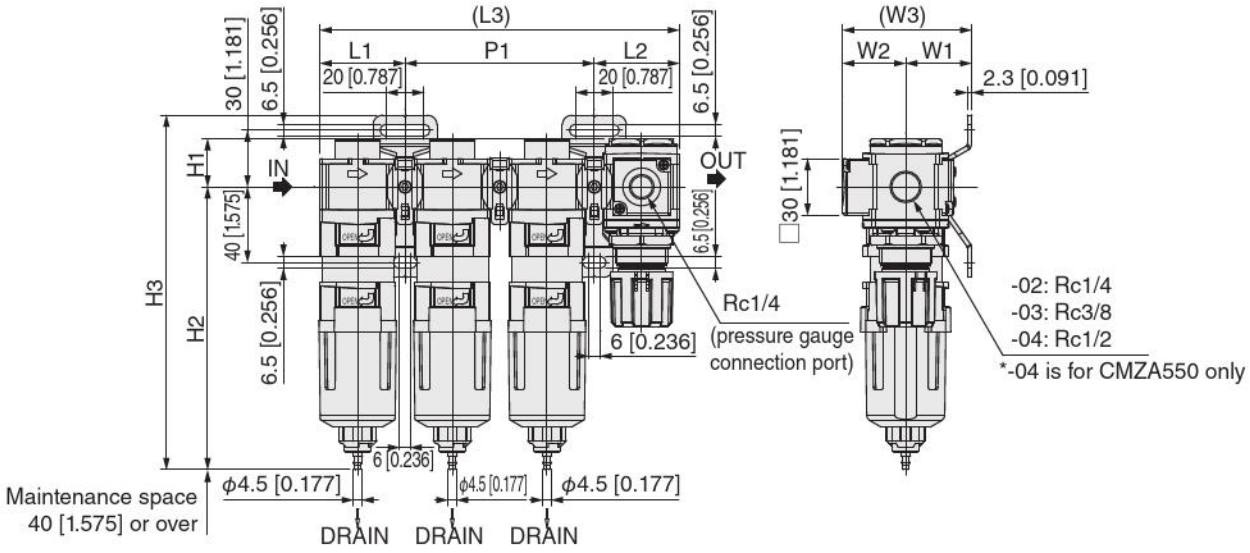

Combination type	L1	L2	L3	P1	H1	H2	H3	W1	W2	W3
CMZA440	45.1 [1.776]	45.1 [1.776]	190.6 [7.504]	100.4 [3.953]	25.5 [1.004]	150 [5.906]	188 [7.402]	35 [1.378]	33.5 [1.319]	68.5 [2.697]
CMZA550	55.1 [2.169]	55.1 [2.169]	230.6 [9.079]	120.4 [4.740]	29 [1.142]	166 [6.535]	204 [8.031]	35 [1.378]	35 [1.378]	70 [2.756]

● CMZA440-[CRM] [FRM] [MRM] [CRD] [FRD] [MRD]
● CMZA550-[CRM] [FRM] [MRM] [CRD] [FRD] [MRD]

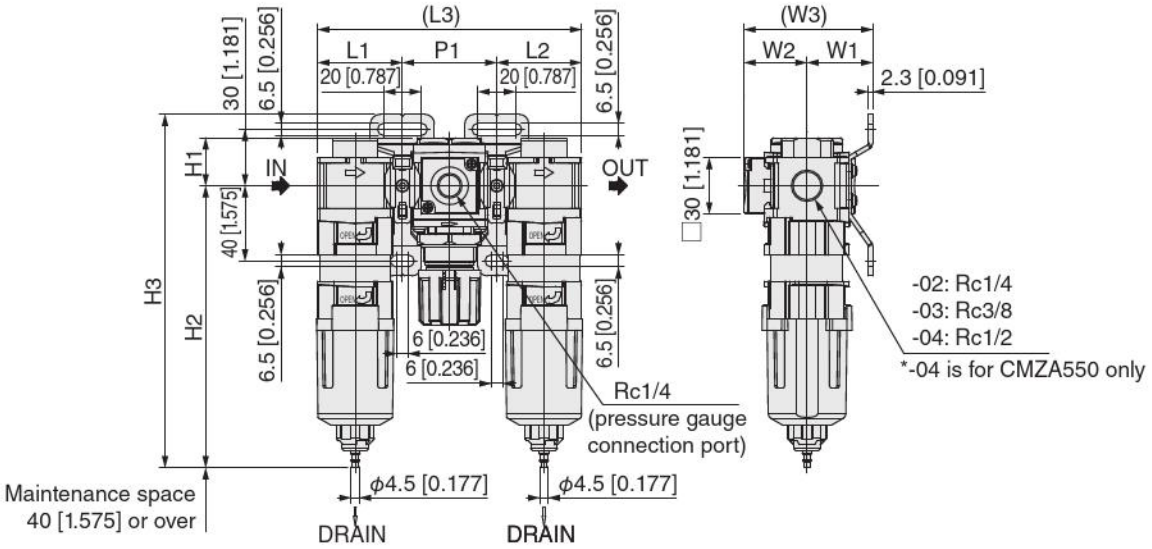

Combination type	L1	L2	L3	P1	H1	H2	H3	W1	W2	W3
CMZA440	45.1 [1.776]	45.1 [1.776]	140.4 [5.528]	50.2 [1.976]	25.5 [1.004]	150 [5.906]	188 [7.402]	35 [1.378]	33.5 [1.319]	68.5 [2.697]
CMZA550	55.1 [2.169]	55.1 [2.169]	170.4 [6.709]	60.2 [2.370]	29 [1.142]	166 [6.535]	204 [8.031]	35 [1.378]	35 [1.378]	70 [2.756]

● CMZA440-[CFRM] [FMRM] [CFRD] [FMRD]
● CMZA550-[CFRM] [FMRM] [CFRD] [FMRD]

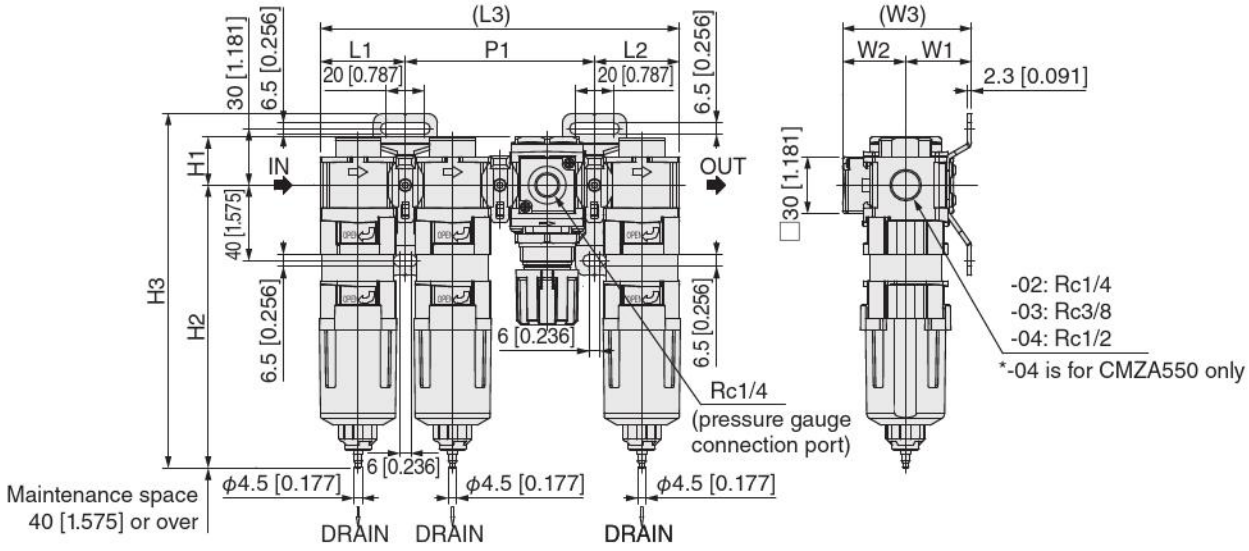

Combination type	L1	L2	L3	P1	H1	H2	H3	W1	W2	W3
CMZA440	45.1 [1.776]	45.1 [1.776]	190.6 [7.504]	100.4 [3.953]	25.5 [1.004]	150 [5.906]	188 [7.402]	35 [1.378]	33.5 [1.319]	68.5 [2.697]
CMZA550	55.1 [2.169]	55.1 [2.169]	230.6 [9.079]	120.4 [4.740]	29 [1.142]	166 [6.535]	204 [8.031]	35 [1.378]	35 [1.378]	70 [2.756]

● CMZA440-[CFMRM] [CFMRD]
● CMZA550-[CFMRM] [CFMRD]

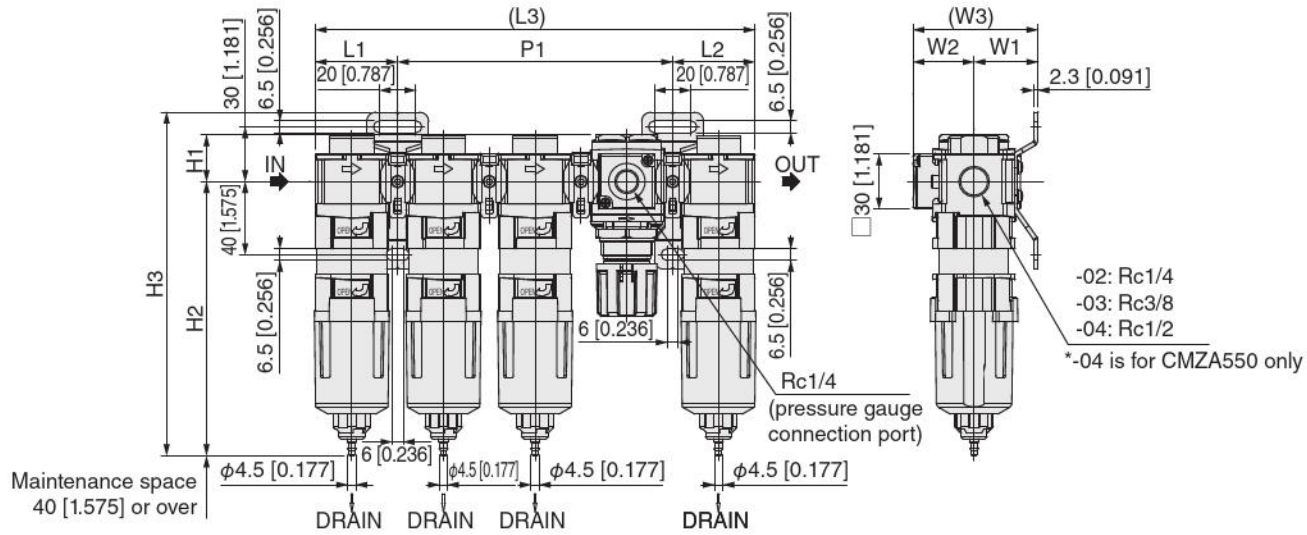

Combination type	L1	L2	L3	P1	H1	H2	H3	W1	W2	W3
CMZA440	45.1 [1.776]	45.1 [1.776]	240.8 [9.480]	150.6 [5.929]	25.5 [1.004]	150 [5.906]	188 [7.402]	35 [1.378]	33.5 [1.319]	68.5 [2.697]
CMZA550	55.1 [2.169]	55.1 [2.169]	290.8 [11.449]	180.6 [7.110]	29 [1.142]	166 [6.535]	204 [8.031]	35 [1.378]	35 [1.378]	70 [2.756]

● CMZA440-[RM] [RD]
● CMZA550-[RM] [RD]

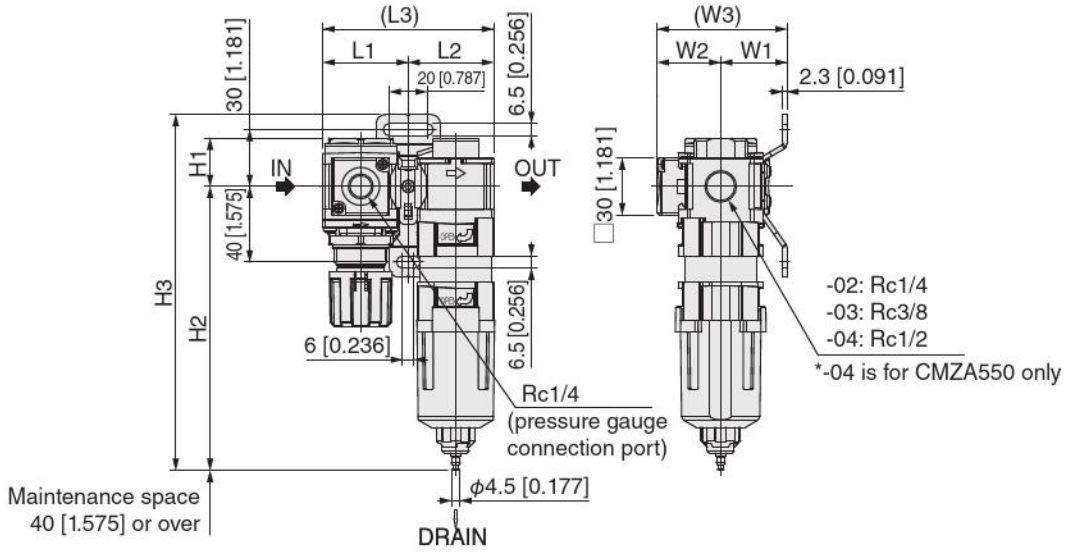

Combination type	L1	L2	L3	H1	H2	H3	W1	W2	W3
CMZA440	45.1 [1.776]	45.1 [1.776]	90.2 [3.551]	25.5 [1.004]	150 [5.906]	188 [7.402]	35 [1.378]	33.5 [1.319]	68.5 [2.697]
CMZA550	55.1 [2.169]	55.1 [2.169]	110.2 [4.339]	29 [1.142]	166 [6.535]	204 [8.031]	35 [1.378]	35 [1.378]	70 [2.756]

● CMZA440·550 configuration diagram

: Connection fittings with brackets

Component	Options	Configuration diagram	Options	Configuration diagram
CR FR MR	No options	① D ②	-V	① D ② D 50VZ
	-PSF	① DPS ②	-V -PSF	① DPS ② D 50VZ
	-PSR	① D ② DPS SP	-V -PSR	① D ② DPS 50VZ
	-T	① D TP D ②	-V -T	① D TP F ② D 50VZ
	-PSF -T	① DPS TP D ②	-V -PSF -T	① DPS TP F ② D 50VZ
	-PSR -T	① D TP F ② DPS SP	-V -PSR -T	① D TP F ② DPS 50VZ

Component	①	②
CR	IBCY	RZ
FR	FNZ	
MR	MFZ	

Component	Options	Configuration diagram	Options	Configuration diagram
CFR FMR	No options	① D ② D ③	-V	① D ② F ③ D 50VZ
	-PSF	① D ② DPS ③	-V -PSF	① D ② PS ③ D 50VZ
	-PSR	① D ② F ③ DPS SP	-V -PSR	① D ② F ③ DPS 50VZ
	-T	① D ② F TP D ③	-V -T	① D ② F TP F ③ D 50VZ
	-PSF -T	① D ② PS TP D ③	-V -PSF -T	① D ② PS TP F ③ D 50VZ
	-PSR -T	① D ② F TP F ③ DPS SP	-V -PSR -T	① D ② F TP F ③ DPS 50VZ

Component	①	②	③
CFR	IBCY	FNZ	RZ
FMR	FNZ	MFZ	RZ

F: F module (for connecting)
D: D module (for connecting (with bracket)
TP: Intermediate extraction block
SP: Piping adapter
PS: Pressure switch module
DPS: Pressure switch module (with bracket)
50VZ: Residual pressure exhaust valve

● CMZA440·550 configuration diagram

: Connection fittings with brackets

Component	Options	Configuration diagram	Options	Configuration diagram
CFMR	No options	IBCY D FNZ F MFZ D RZ	-V	IBCY D FNZ F MFZ F RZ D 50VZ
	-PSF	IBCY D FNZ F MFZ DPS RZ	-V -PSF	IBCY D FNZ F MFZ PS RZ D 50VZ
	-PSR	IBCY D FNZ F MFZ F RZ DPS SP	-V -PSR	IBCY D FNZ F MFZ F RZ DPS 50VZ
	-T	IBCY D FNZ F MFZ F TP D RZ	-V -T	IBCY D FNZ F MFZ D TP F RZ D 50VZ
	-PSF -T	IBCY D FNZ F MFZ PS TP D RZ	-V -PSF -T	IBCY D FNZ F MFZ DPS TP F RZ D 50VZ
	-PSR -T	IBCY D FNZ F MFZ D TP F RZ DPS SP	-V -PSR -T	IBCY D FNZ F MFZ D TP F RZ DPS 50VZ

Component	Options	Configuration diagram	Options	Configuration diagram
CRM CRD FRM FRD MRM MRD	No options	① D ② D ③	-V	① D ② F ③ D 50VZ
	-PSF	① DPS ② D ③	-V -PSF	① DPS ② F ③ D 50VZ
	-PSR	① D ② DPS ③	-V -PSR	① D ② PS ③ D 50VZ
	-T	① D TP F ② D ③	-V -T	① D TP F ② F ③ D 50VZ
	-PSF -T	① DPS TP F ② D ③	-V -PSF -T	① DPS TP F ② F ③ D 50VZ
	-PSR -T	① D TP F ② DPS ③	-V -PSR -T	① D TP F ② PS ③ D 50VZ

Component	①	②	③
CRM	IBCY	RZ	MFZ
CRD			MMFZ
FRM	FNZ		MFZ
FRD			MMFZ
MRM	MFZ		MFZ
MRD			MMFZ

F: F module (for connecting)
D: D module (for connecting (with bracket)
TP: Intermediate extraction block
SP: Piping adapter
PS: Pressure switch module
DPS: Pressure switch module (with bracket)
50VZ: Residual pressure exhaust valve

● CMZA440·550 configuration diagram

: Connection fittings with brackets

Component	Options	Configuration diagram	Options	Configuration diagram
CFRM CFRD FMRM FMRD	No options	① D ② F ③ D ④	-V	① D ② F ③ F ④ D 50VZ
	-PSF	① D ② PS ③ D ④	-V -PSF	① D ② PS ③ F ④ D 50VZ
	-PSR	① D ② F ③ DPS ④	-V -PSR	① D ② F ③ PS ④ D 50VZ
	-T	① D ② F TP F ③ D ④	-V -T	① D ② F TP D ③ F ④ D 50VZ
	-PSF -T	① D ② PS TP F ③ D ④	-V -PSF -T	① D ② PS TP D ③ F ④ D 50VZ
	-PSR -T	① D ② F TP F ③ DPS ④	-V -PSR -T	① D ② F TP D ③ PS ④ D 50VZ

Component	①	②	③	④
CFRM	IBCY	FNZ	RZ	MFZ
CFRD				MMFZ
FMRM	FNZ	MFZ	RZ	MFZ
FMRD				MMFZ

Component	Options	Configuration diagram	Options	Configuration diagram
CFMRM CFMRD	No options	① D ② F ③ F ④ D ⑤	-V	① D ② F ③ D ④ F ⑤ D 50VZ
	-PSF	① D ② F ③ PS ④ D ⑤	-V -PSF	① D ② F ③ DPS ④ F ⑤ D 50VZ
	-PSR	① D ② F ③ F ④ DPS ⑤	-V -PSR	① D ② F ③ D ④ PS ⑤ D 50VZ
	-T	① D ② F ③ D TP F ④ D ⑤	-V -T	① D ② F ③ D TP F ④ F ⑤ D 50VZ
	-PSF -T	① D ② F ③ DPS TP F ④ D ⑤	-V -PSF -T	① D ② F ③ DPS TP F ④ F ⑤ D 50VZ
	-PSR -T	① D ② F ③ D TP F ④ DPS ⑤	-V -PSR -T	① D ② F ③ D TP F ④ PS ⑤ D 50VZ

Component	①	②	③	④	⑤
CFMRM	IBCY	FNZ	MFZ	RZ	MFZ
CFMRD					MMFZ

F: F module (for connecting)
D: D module (for connecting (with bracket)
TP: Intermediate extraction block
SP: Piping adapter

PS: Pressure switch module
DPS: Pressure switch module (with bracket)
50VZ: Residual pressure exhaust valve

● CMZA440·550 configuration diagram

: Connection fittings with brackets

Component	Options	Configuration diagram	Options	Configuration diagram
RM RD	No options	① D ②	-V	① D ② D 50VZ
	-PSF	SP DPS ① D ②	-V -PSF	SP DPS ① F ② D 50VZ
	-PSR	① DPS ②	-V -PSR	① DPS ② D 50VZ
	-T	TP D ① D ②	-V -T	TP D ① F ② D 50VZ
	-PSF -T	SP DPS TP F ① D ②	-V -PSF -T	SP DPS TP F ① F ② D 50VZ
	-PSR -T	TP D ① DPS ②	-V -PSR -T	TP D ① PS ② D 50VZ

Component	①	②
RM	RZ	MFZ
RD		MMFZ

F: F module (for connecting)
D: D module (for connecting (with bracket)
TP: Intermediate extraction block
SP: Piping adapter
PS: Pressure switch module
DPS: Pressure switch module (with bracket)
50VZ: Residual pressure exhaust valve

● CMZA440·550 Option dimension diagrams (mm [in.])

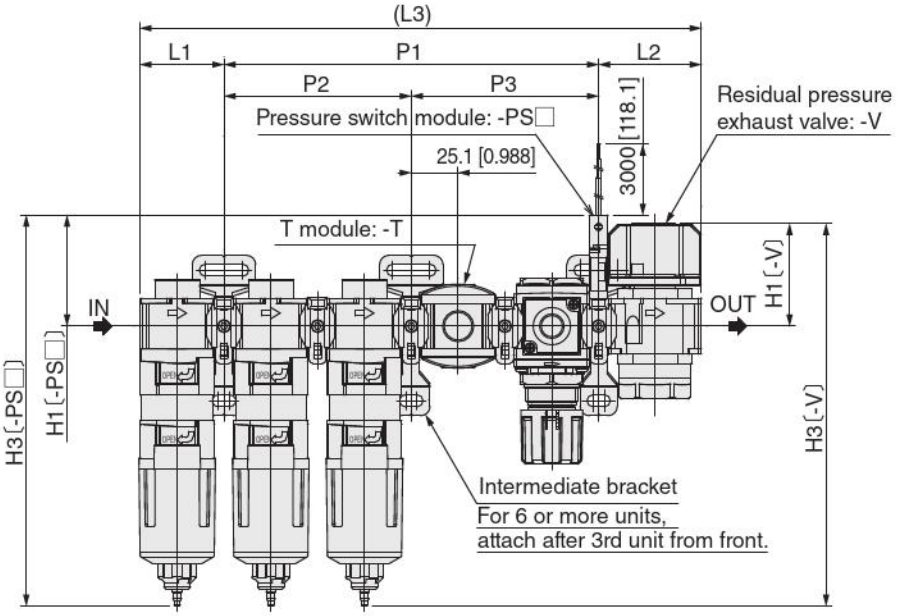

See the option configuration diagrams on pages 24-27 for option and bracket positions for each combination of components.

● Pressure gauge option

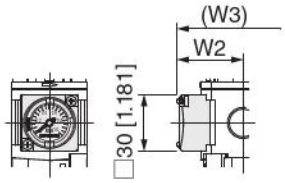

For -G1C

Combination type	-G1C □30 integrated pressure gauge	
	W2	W3
CMZA440	35 [1.378]	70 [2.756]
CMZA550	36.5 [1.437]	71.5 [2.815]

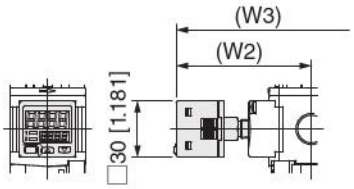

For -GS6

Combination type	-GS6 Digital pressure gauge	
	W2	W3
CMZA440	72 [2.835]	107 [4.213]
CMZA550	73.5 [2.894]	108.5 [4.272]

S When adapter is leading end
[RM] [RD]
: -PSF, -PSF-T, -V-PSF, -V-PSF-T

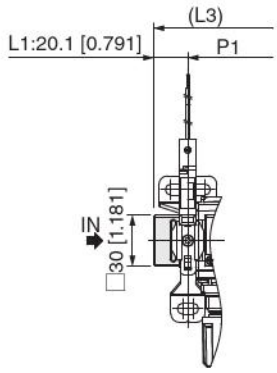

S When adapter is terminal
[CFR] [FMR] [CFMR] [CR] [FR] [MR]
: -PSR, -PSR-T

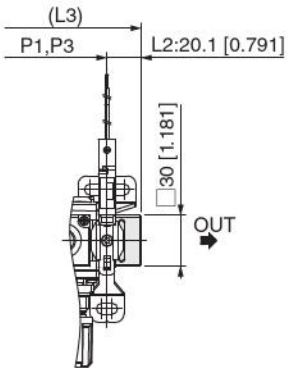

When T module is leading end
[RM] [RD]
: -T, -V-T, -PSR-T, -V-PSR-T

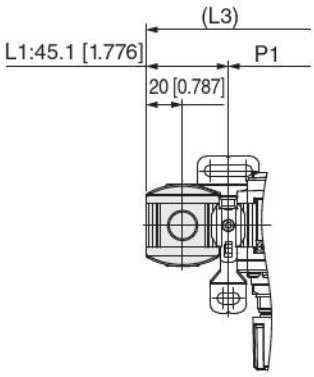

Tables of overall length (face to face) and mounting dimensions when option is selected

● CMZA440·550 Option dimension tables (mm)

Combination type	Component	-V							-T				
		Residual pressure exhaust valve							T module				
		L2	L3	P1	P2	P3	H1	H3	L1	L3	P1	P2	P3
CMZA440	CR, FR, MR	55.1	150.4	50.2	—	—	55	205	45.1	140.4	50.2	—	—
	CFR, FMR		200.6	100.4	—	—				190.6	100.4	—	—
	CFMR		250.8	150.6	—	—				240.8	150.6	—	—
	CRM, CRD, FRM, FRD, MRM, MRD		200.6	100.4	—	—				190.6	100.4	—	—
	CFRM, CFRD, FMRM, FMRD		250.8	150.6	—	—				240.8	150.6	—	—
	CFMRM, CFMRD		301	200.8	100.4	100.4				291	200.8	100.4	100.4
	RM, RD		150.4	50.2	—	—				140.4	50.2	—	—
CMZA550	CR, FR, MR	55.1	170.4	60.2	—	—	55	221	55.1	160.4	50.2	—	—
	CFR, FMR		230.6	120.4	—	—				220.6	110.4	—	—
	CFMR		290.8	180.6	—	—				280.8	170.6	—	—
	CRM, CRD, FRM, FRD, MRM, MRD		230.6	120.4	—	—				220.6	110.4	—	—
	CFRM, CFRD, FMRM, FMRD		290.8	180.6	—	—				280.8	170.6	—	—
	CFMRM, CFMRD		351	240.8	120.4	120.4				341	230.8	120.4	110.4
	RM, RD		170.4	60.2	—	—			45.1	160.4	60.2	—	—

Combination type	Component	-PSF					-PSR				
		Pressure switch module					Pressure switch module				
		L1	L3	P1	H1	H3	L2	L3	P1	H1	H3
CMZA440	CR, FR, MR	45.1	90.2	—	59.5	209.5	20.1	115.4	50.2	59.5	209.5
	CFR, FMR		140.4	50.2				165.6	100.4		
	CFMR		190.6	100.4				215.8	150.6		
	CRM, CRD, FRM, FRD, MRM, MRD		140.4	50.2			45.1	140.4	50.2		
	CFRM, CFRD, FMRM, FMRD		190.6	100.4				190.6	100.4		
	CFMRM, CFMRD		240.8	150.6				240.8	150.6		
	RM, RD	20.1	115.4	50.2				90.2	—		
CMZA550	CR, FR, MR	55.1	110.2	—	59.5	225.5	20.1	135.4	60.2	59.5	225.5
	CFR, FMR		170.4	60.2				195.6	120.4		
	CFMR		230.6	120.4				255.8	180.6		
	CRM, CRD, FRM, FRD, MRM, MRD		170.4	60.2			55.1	170.4	60.2		
	CFRM, CFRD, FMRM, FMRD		230.6	120.4				230.6	120.4		
	CFMRM, CFMRD		290.8	180.6				290.8	180.6		
	RM, RD	20.1	135.4	60.2				110.2	—		

Combination type	Component	-V-PSF								-V-PSR						
		Residual pressure exhaust valve + Pressure switch module								Residual pressure exhaust valve + Pressure switch module						
		L1	L2	L3	P1	P2	P3	H1	H3	L2	L3	P1	P2	P3	H1	H3
CMZA440	CR, FR, MR	45.1	55.1	150.4	50.2	—	—	59.5	209.5	55.1	150.4	50.2	—	—	59.5	209.5
	CFR, FMR			200.6	100.4	—	—				200.6	100.4	—	—		
	CFMR			250.8	150.6	—	—				250.8	150.6	—	—		
	CRM, CRD, FRM, FRD, MRM, MRD			200.6	100.4	—	—				200.6	100.4	—	—		
	CFRM, CFRD, FMRM, FMRD			250.8	150.6	—	—				250.8	150.6	—	—		
	CFMRM, CFMRD			301	200.8	100.4	100.4				301	200.8	100.4	100.4		
	RM, RD	20.1		175.6	100.4	—	—				150.4	50.2	—	—		
CMZA550	CR, FR, MR	55.1	55.1	170.4	60.2	—	—	59.5	225.5	55.1	170.4	60.2	—	—	59.5	225.5
	CFR, FMR			230.6	120.4	—	—				230.6	120.4	—	—		
	CFMR			290.8	180.6	—	—				290.8	180.6	—	—		
	CRM, CRD, FRM, FRD, MRM, MRD			230.6	120.4	—	—				230.6	120.4	—	—		
	CFRM, CFRD, FMRM, FMRD			290.8	180.6	—	—				290.8	180.6	—	—		
	CFMRM, CFMRD			351	240.8	120.4	120.4				351	240.8	120.4	120.4		
	RM, RD	20.1		195.6	120.4	—	—				170.4	60.2	—	—		

* The shaded dimensions are the same value as when there are no options.

Tables of overall length (face to face) and mounting dimensions when option is selected

● CMZA440·550 Option dimension tables (in.)

Combination type	Component	-V Residual pressure exhaust valve							-T T module				
		L2	L3	P1	P2	P3	H1	H3	L1	L3	P1	P2	P3
CMZA440	CR, FR, MR	2.169	5.921	1.976	—	—	2.165	8.071	1.776	5.528	1.976	—	—
	CFR, FMR		7.898	3.953	—	—				7.504	3.953	—	—
	CFMR		9.874	5.929	—	—				9.480	5.929	—	—
	CRM, CRD, FRM, FRD, MRM, MRD		7.898	3.953	—	—				7.504	3.953	—	—
	CFRM, CFRD, FMRM, FMRD		9.874	5.929	—	—				9.480	5.929	—	—
	CFMRM, CFMRD		11.850	7.906	3.953	3.953				11.457	7.906	3.953	3.953
	RM, RD		5.921	1.976	—	—				5.528	1.976	—	—
CMZA550	CR, FR, MR	2.169	6.709	2.370	—	—	2.165	8.701	2.169	6.315	1.976	—	—
	CFR, FMR		9.079	4.740	—	—				8.685	4.346	—	—
	CFMR		11.449	7.110	—	—				11.055	6.717	—	—
	CRM, CRD, FRM, FRD, MRM, MRD		9.079	4.740	—	—				8.685	4.346	—	—
	CFRM, CFRD, FMRM, FMRD		11.449	7.110	—	—				11.055	6.717	—	—
	CFMRM, CFMRD		13.819	9.480	4.740	4.740				13.425	9.087	4.740	4.346
	RM, RD		6.709	2.370	—	—			1.776	6.315	2.370	—	—

Combination type	Component	-PSF Pressure switch module					-PSR Pressure switch module				
		L1	L3	P1	H1	H3	L2	L3	P1	H1	H3
CMZA440	CR, FR, MR	1.776	3.551	—	2.343	8.248	0.791	4.543	1.976	2.343	8.248
	CFR, FMR		5.528	1.976				6.520	3.953		
	CFMR		7.504	3.953				8.496	5.929		
	CRM, CRD, FRM, FRD, MRM, MRD		5.528	1.976			1.776	5.528	1.976		
	CFRM, CFRD, FMRM, FMRD		7.504	3.953				7.504	3.953		
	CFMRM, CFMRD		9.480	5.929				9.480	5.929		
	RM, RD	0.791	4.543	1.976				3.551	—		
CMZA550	CR, FR, MR	2.169	4.339	—	2.343	8.878	0.791	5.331	2.370	2.343	8.878
	CFR, FMR		6.709	2.370				7.701	4.740		
	CFMR		9.079	4.740				10.071	7.110		
	CRM, CRD, FRM, FRD, MRM, MRD		6.709	2.370			2.169	6.709	2.370		
	CFRM, CFRD, FMRM, FMRD		9.079	4.740				9.079	4.740		
	CFMRM, CFMRD		11.449	7.110				11.449	7.110		
	RM, RD	0.791	5.331	2.370				4.339	—		

Combination type	Component	-V-PSF Residual pressure exhaust valve + Pressure switch module								-V-PSR Residual pressure exhaust valve + Pressure switch module						
		L1	L2	L3	P1	P2	P3	H1	H3	L2	L3	P1	P2	P3	H1	H3
CMZA440	CR, FR, MR	1.776	2.169	5.921	1.976	—	—	2.343	8.248	2.169	5.921	1.976	—	—	2.343	8.248
	CFR, FMR			7.898	3.953	—	—				7.898	3.953	—	—		
	CFMR			9.874	5.929	—	—				9.874	5.929	—	—		
	CRM, CRD, FRM, FRD, MRM, MRD			7.898	3.953	—	—				7.898	3.953	—	—		
	CFRM, CFRD, FMRM, FMRD			9.874	5.929	—	—				9.874	5.929	—	—		
	CFMRM, CFMRD			11.850	7.906	3.953	3.953				11.850	7.906	3.953	3.953		
	RM, RD	0.791		6.913	3.953	—	—				5.921	1.976	—	—		
CMZA550	CR, FR, MR	2.169	2.169	6.709	2.370	—	—	2.343	8.878	2.169	6.709	2.370	—	—	2.343	8.878
	CFR, FMR			9.079	4.740	—	—				9.079	4.740	—	—		
	CFMR			11.449	7.110	—	—				11.449	7.110	—	—		
	CRM, CRD, FRM, FRD, MRM, MRD			9.079	4.740	—	—				9.079	4.740	—	—		
	CFRM, CFRD, FMRM, FMRD			11.449	7.110	—	—				11.449	7.110	—	—		
	CFMRM, CFMRD			13.819	9.480	4.740	4.740				13.819	9.480	4.740	4.740		
	RM, RD	0.791		7.701	4.740	—	—				6.709	2.370	—	—		

* The shaded dimensions are the same value as when there are no options.

Tables of overall length (face to face) and mounting dimensions when option is selected

● **CMZA440·550** Option dimension tables (mm)

Combination type	Component	-PSF-T							-PSR-T							
		Pressure switch module + T module							Pressure switch module + T module							
		L1	L3	P1	P2	P3	H1	H3	L1	L2	L3	P1	P2	P3	H1	H3
CMZA440	CR, FR, MR	45.1	140.4	50.2	—	—	59.5	209.5	45.1	20.1	165.6	100.4	—	—	59.5	209.5
	CFR, FMR		190.6	100.4	—	—					215.8	150.6	—	—		
	CFMR		240.8	150.6	—	—					266	200.8	100.4	100.4		
	CRM, CRD, FRM, FRD, MRM, MRD		190.6	100.4	—	—				45.1	190.6	100.4	—	—		
	CFRM, CFRD, FMRM, FMRD		240.8	150.6	—	—					240.8	150.6	—	—		
	CFMRM, CFMRD		291	200.8	100.4	100.4					291	200.8	100.4	100.4		
	RM, RD	20.1	165.6	100.4	—	—					140.4	50.2	—	—		
CMZA550	CR, FR, MR	55.1	160.4	50.2	—	—	59.5	225.5	55.1	20.1	185.6	110.4	—	—	59.5	225.5
	CFR, FMR		220.6	110.4	—	—					245.8	170.6	—	—		
	CFMR		280.8	170.6	—	—					306	230.8	120.4	110.4		
	CRM, CRD, FRM, FRD, MRM, MRD		220.6	110.4	—	—				55.1	220.6	110.4	—	—		
	CFRM, CFRD, FMRM, FMRD		280.8	170.6	—	—					280.8	170.6	—	—		
	CFMRM, CFMRD		341	230.8	120.4	110.4					341	230.8	120.4	110.4		
	RM, RD	20.1	185.6	110.4	—	—			45.1		160.4	60.2	—	—		

Combination type	Component	-V-T							
		Residual pressure exhaust valve + T module							
		L1	L2	L3	P1	P2	P3	H1	H3
CMZA440	CR, FR, MR	45.1	55.1	200.6	100.4	—	—	55	205
	CFR, FMR			250.8	150.6	—	—		
	CFMR			301	200.8	100.4	100.4		
	CRM, CRD, FRM, FRD, MRM, MRD			250.8	150.6	—	—		
	CFRM, CFRD, FMRM, FMRD			301	200.8	100.4	100.4		
	CFMRM, CFMRD			351.2	251	100.4	150.6		
	RM, RD			200.6	100.4	—	—		
CMZA550	CR, FR, MR	55.1	55.1	220.6	110.4	—	—	55	221
	CFR, FMR			280.8	170.6	—	—		
	CFMR			341	230.8	120.4	110.4		
	CRM, CRD, FRM, FRD, MRM, MRD			280.8	170.6	—	—		
	CFRM, CFRD, FMRM, FMRD			341	230.8	110.4	120.4		
	CFMRM, CFMRD			401.2	291	120.4	170.6		
	RM, RD	45.1		220.6	120.4	—	—		

Combination type	Component	-V-PSF-T								-V-PSR-T							
		Residual pressure exhaust valve + Pressure switch module + T module								Residual pressure exhaust valve + Pressure switch module + T module							
		L1	L2	L3	P1	P2	P3	H1	H3	L1	L2	L3	P1	P2	P3	H1	H3
CMZA440	CR, FR, MR	45.1	55.1	200.6	100.4	—	—	59.5	209.5	45.1	55.1	200.6	100.4	—	—	59.5	209.5
	CFR, FMR			250.8	150.6	—	—					250.8	150.6	—	—		
	CFMR			301	200.8	100.4	100.4					301	200.8	100.4	100.4		
	CRM, CRD, FRM, FRD, MRM, MRD			250.8	150.6	—	—					250.8	150.6	—	—		
	CFRM, CFRD, FMRM, FMRD			301	200.8	100.4	100.4					301	200.8	100.4	100.4		
	CFMRM, CFMRD			351.2	251	100.4	150.6					351.2	251	100.4	150.6		
	RM, RD	20.1		225.8	150.6	—	—					200.6	100.4	—	—		
CMZA550	CR, FR, MR	55.1	55.1	220.6	110.4	—	—	59.5	225.5	55.1	55.1	220.6	110.4	—	—	59.5	225.5
	CFR, FMR			280.8	170.6	—	—					280.8	170.6	—	—		
	CFMR			341	230.8	120.4	110.4					341	230.8	120.4	110.4		
	CRM, CRD, FRM, FRD, MRM, MRD			280.8	170.6	—	—					280.8	170.6	—	—		
	CFRM, CFRD, FMRM, FMRD			341	230.8	110.4	120.4					341	230.8	110.4	120.4		
	CFMRM, CFMRD			401.2	291	120.4	170.6					401.2	291	120.4	170.6		
	RM, RD	20.1		245.8	170.6	—	—			45.1		220.6	120.4	—	—		

* The shaded dimensions are the same value as when there are no options.

Tables of overall length (face to face) and mounting dimensions when option is selected

● CMZA440·550 Option dimension tables (in.)

Combination type	Component	-PSF-T Pressure switch module + T module							-PSR-T Pressure switch module + T module							
		L1	L3	P1	P2	P3	H1	H3	L1	L2	L3	P1	P2	P3	H1	H3
CMZA440	CR, FR, MR	1.776	5.528	1.976	—	—	2.343	8.248	1.776	0.791	6.520	3.953	—	—	2.343	8.248
	CFR, FMR		7.504	3.953	—	—					8.496	5.929	—	—		
	CFMR		9.480	5.929	—	—					10.472	7.906	3.953	3.953		
	CRM, CRD, FRM, FRD, MRM, MRD		7.504	3.953	—	—				1.776	7.504	3.953	—	—		
	CFRM, CFRD, FMRM, FMRD		9.480	5.929	—	—					9.480	5.929	—	—		
	CFMRM, CFMRD		11.457	7.906	3.953	3.953					11.457	7.906	3.953	3.953		
	RM, RD	0.791	6.520	3.953	—	—					5.528	1.976	—	—		
CMZA550	CR, FR, MR	2.169	6.315	1.976	—	—	2.343	8.878	2.169	0.791	7.307	4.346	—	—	2.343	8.878
	CFR, FMR		8.685	4.346	—	—					9.677	6.717	—	—		
	CFMR		11.055	6.717	—	—					12.047	9.087	4.740	4.346		
	CRM, CRD, FRM, FRD, MRM, MRD		8.685	4.346	—	—				2.169	8.685	4.346	—	—		
	CFRM, CFRD, FMRM, FMRD		11.055	6.717	—	—					11.055	6.717	—	—		
	CFMRM, CFMRD		13.425	9.087	4.740	4.346					13.425	9.087	4.740	4.346		
	RM, RD	0.791	7.307	4.346	—	—			1.776		6.315	2.370	—	—		

Combination type	Component	-V-T Residual pressure exhaust valve + T module							
		L1	L2	L3	P1	P2	P3	H1	H3
CMZA440	CR, FR, MR	1.776	2.169	7.898	3.953	—	—	2.165	8.071
	CFR, FMR			9.874	5.929	—	—		
	CFMR			11.850	7.906	3.953	3.953		
	CRM, CRD, FRM, FRD, MRM, MRD			9.874	5.929	—	—		
	CFRM, CFRD, FMRM, FMRD			11.850	7.906	3.953	3.953		
	CFMRM, CFMRD			13.827	9.882	3.953	5.929		
	RM, RD			7.898	3.953	—	—		
CMZA550	CR, FR, MR	2.169	2.169	8.685	4.346	—	—	2.165	8.701
	CFR, FMR			11.055	6.717	—	—		
	CFMR			13.425	9.087	4.740	4.346		
	CRM, CRD, FRM, FRD, MRM, MRD			11.055	6.717	—	—		
	CFRM, CFRD, FMRM, FMRD			13.425	9.087	4.346	4.740		
	CFMRM, CFMRD			15.795	11.457	4.740	6.717		
	RM, RD	1.776		8.685	4.740	—	—		

Combination type	Component	-V-PSF-T Residual pressure exhaust valve + Pressure switch module + T module								-V-PSR-T Residual pressure exhaust valve + Pressure switch module + T module							
		L1	L2	L3	P1	P2	P3	H1	H3	L1	L2	L3	P1	P2	P3	H1	H3
CMZA440	CR, FR, MR	1.776	2.169	7.898	3.953	—	—	2.343	8.248	1.776	2.169	7.898	3.953	—	—	2.343	8.248
	CFR, FMR			9.874	5.929	—	—					9.874	5.929	—	—		
	CFMR			11.850	7.906	3.953	3.953					11.850	7.906	3.953	3.953		
	CRM, CRD, FRM, FRD, MRM, MRD			9.874	5.929	—	—					9.874	5.929	—	—		
	CFRM, CFRD, FMRM, FMRD			11.850	7.906	3.953	3.953					11.850	7.906	3.953	3.953		
	CFMRM, CFMRD			13.827	9.882	3.953	5.929					13.827	9.882	3.953	5.929		
	RM, RD	0.791		8.890	5.929	—	—					7.898	3.953	—	—		
CMZA550	CR, FR, MR	2.169	2.169	8.685	4.346	—	—	2.343	8.878	2.169	2.169	8.685	4.346	—	—	2.343	8.878
	CFR, FMR			11.055	6.717	—	—					11.055	6.717	—	—		
	CFMR			13.425	9.087	4.740	4.346					13.425	9.087	4.740	4.346		
	CRM, CRD, FRM, FRD, MRM, MRD			11.055	6.717	—	—					11.055	6.717	—	—		
	CFRM, CFRD, FMRM, FMRD			13.425	9.087	4.346	4.740					13.425	9.087	4.346	4.740		
	CFMRM, CFMRD			15.795	11.457	4.740	6.717					15.795	11.457	4.740	6.717		
	RM, RD	0.791		9.677	6.717	—	—			1.776		8.685	4.740	—	—		

* The shaded dimensions are the same value as when there are no options.

CMZB

Compact Combination

Specifications

Model		CMZB440	CMZB550
Media		Air	
Port size	Rc	1/4, 3/8	1/4, 3/8, 1/2
Maximum operating pressure	MPa [psi]	1.0 [145]	
Proof pressure	MPa [psi]	1.5 [218]	
Operating pressure range	MPa [psi]	0.05 to 0.85 [7 to 123]	
Operating temperature range (atmospheric and medium)	℃ [°F]	5 to 60 [41 to 140] (medium must not freeze)	

Specifications by component

● CMZB440/CMZB550

Component model code		CR		CRM		CRD	
Combination type		CMZB440	CMZB550	CMZB440	CMZB550	CMZB440	CMZB550
Component combinations		IBCY40	IBCY50	IBCY40	IBCY50	IBCY40	IBCY50
		FRZB40	FRZB50	FRZB40	FRZB50	FRZB40	FRZB50
		—		MFZ40	MFZ50	MMFZ40	MMFZ50
Water separation rate	%	99 or more (under rated conditions)					
Filtration	μm	5		0.3		0.01	
Particle filtering efficiency	%	—		99.9		99.9999	
Secondary oil mist concentration[Note 1]	mg/m³	—		1.0 or less		0.01 or less	
Maximum flow rate[Note 2]	L/min (ANR) [ft³/min (SCFM)]	1200 [42.384]	1900 [67.108]	300 [10.596]	750 [26.490]	150 [5.298]	400 [14.128]
Weight	kg [lb]	0.52 [1.147]	0.71 [1.566]	0.79 [1.742]	1.08 [2.381]	0.79 [1.742]	1.08 [2.381]

Component model code		RM		RD	
Combination type		CMZB440	CMZB550	CMZB440	CMZB550
Component combinations		FRZB40	FRZB50	FRZB40	FRZB50
		MFZ40	MFZ50	MMFZ40	MMFZ50
Filtration	μm	0.3		0.01	
Particle filtering efficiency	%	99.9		99.9999	
Secondary oil mist concentration[Note 1]	mg/m³	1.0 or less		0.01 or less	
Maximum flow rate[Note 2]	L/min (ANR) [ft³/min (SCFM)]	300 [10.596]	750 [26.490]	150 [5.298]	400 [14.128]
Weight	kg [lb]	0.52 [1.147]	0.71 [1.566]	0.52 [1.147]	0.71 [1.566]

Note 1: Value when the primary-side oil mist concentration is 30 mg/m³.
2: Value when the primary-side pressure is 0.7 MPa [102 psi] and regulator set pressure is 0.6 MPa [87 psi].
3: Ensure that the supply pressure is above 0.15 MPa [22 psi] if auto drain is selected as an option. (Supply pressure is needed to operate the auto drain.)
4: For details about each combined component, refer to the page for that product in this catalog.
5: Use a PCT resin bowl when using products in a location with a poor atmosphere (places with a risk of exposure to cutting oil, machine oil, etc.).

● Compact Combination

CMZB □ **0** – □ – □ – □ – □ – □ □ – □ – □ – □

Direction of flow
Blank —— Specifications (left to right)
R ——— Reverse flow (right to left)

Bowl specifications
APG —— Auto drain N.O. + With bowl guard
CPG —— Auto drain N.C. + With bowl guard
NPG —— Drain cock with fitting + With bowl guard
PAPG —— PCTResin bowl + Auto drain N.O. + With bowl guard
PCPG —— PCTResin bowl + Auto drain N.C. + With bowl guard
PNPG —— PCTResin bowl + Drain cock with fitting + With bowl guard
*** IBCY, FRZB, MFZ, MMFZ have the same specifications.**

Lead wire length
B ——— 3000 mm [118.1 in.]

Pressure switch module*
Blank —— None
PSF —— Just before regulator
PSR —— Just after regulator
The length of lead wires must be selected.

* Pressure switch modules have a pressure setting range of 0.1 to 0.4 MPa [15 to 58 psi]. Check the control method before selection. See page 144 for details about specifications.

T module
Blank —None
T ———Just before regulator
* For models with pressure switch module (PSF), installation is between the switch and the regulator.

Pressure gauge specifications
Blank —— No pressure gauge (with pressure gauge connection port, Rc1/4)
G1C —— 1 MPa [145 psi] specifications, □30 [1.181] integrated pressure gauge
GS6 —— 1 MPa [145 psi] specifications, digital pressure switch

Port size
02 ——— Rc1/4
03 ——— Rc3/8
04 ——— Rc1/2 (only CMZB550 can be selected)

Residual pressure exhaust valve
Blank —— None
V ——— With residual pressure exhaust valve (installed at secondary-side terminal)

Component

Code		Component		
CR	–	IBCY	FRZB	—
CRM	–	IBCY	FRZB	MFZ
CRD	–	IBCY	FRZB	MMFZ
RM	–	—	FRZB	MFZ
RD	–	—	FRZB	MMFZ

Body size

Code		IBCY·FNZ·MFZ·MMFZ body size	FRZB body size
44	–	40 size	40 size
55	–	50 size	50 size

CMZB —— Compact Combination

* These graphs show the maximum pipe diameters.

● CMZB440-[CR]

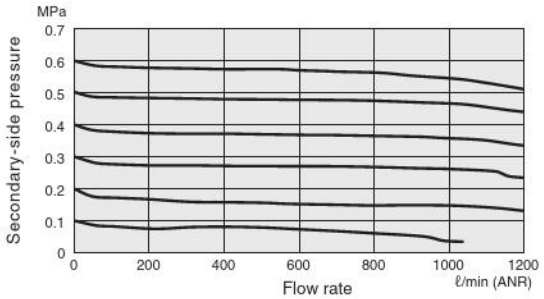

● CMZB550-[CR]

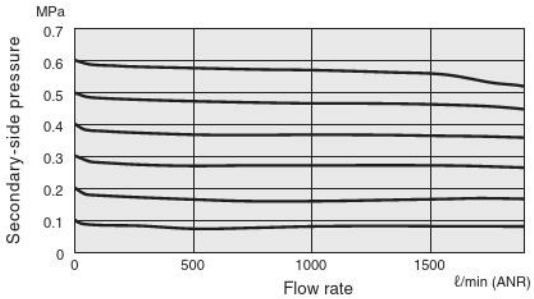

● CMZB440-[CRM] [RM]

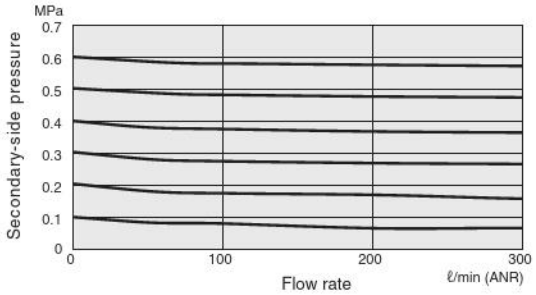

● CMZB550-[CRM] [RM]

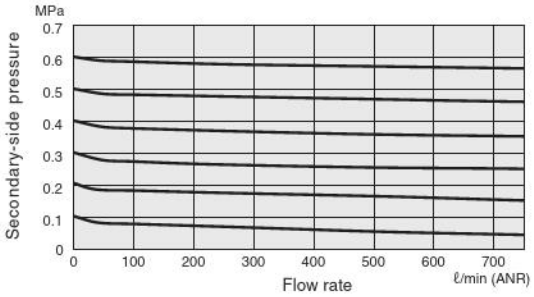

● CMZB440-[CRD] [RD]

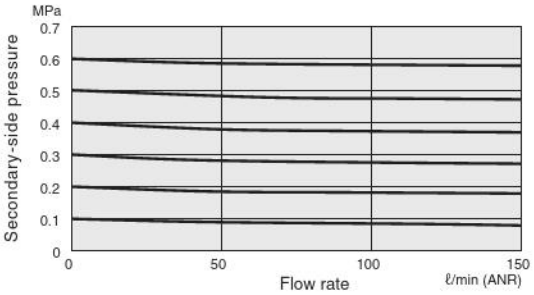

● CMZB550-[CRD] [RD]

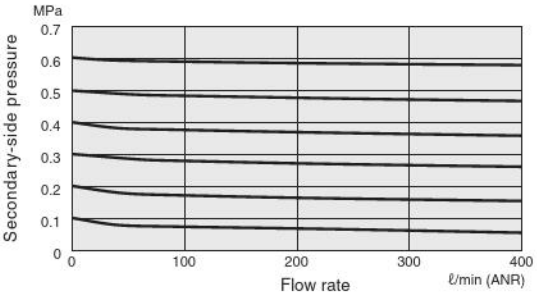

● CMZB440-[CR]
● CMZB550-[CR]

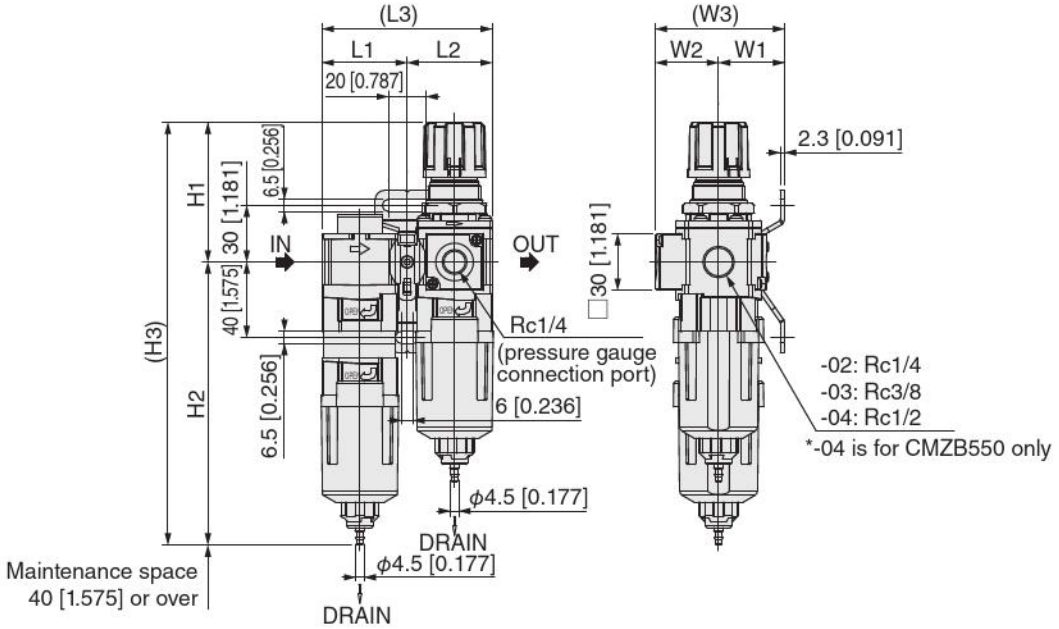

Combination type	L1	L2	L3	H1	H2	H3	W1	W2	W3
CMZB440	45.1 [1.776]	45.1 [1.776]	90.2 [3.551]	74 [2.913]	150 [5.906]	224 [8.819]	35 [1.378]	33.5 [1.319]	68.5 [2.697]
CMZB550	55.1 [2.169]	55.1 [2.169]	110.2 [4.339]	79.5 [3.130]	166 [6.535]	245.5 [9.665]	35 [1.378]	35 [1.378]	70 [2.756]

● CMZB440-[CRM] [CRD]
● CMZB550-[CRM] [CRD]

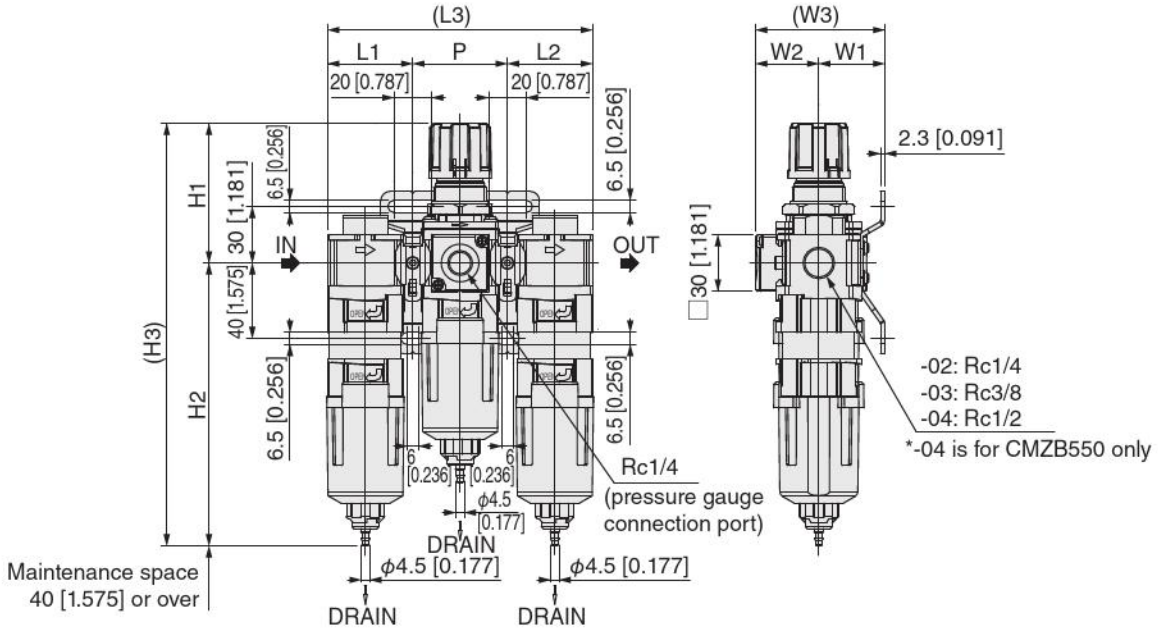

Combination type	L1	L2	L3	P	H1	H2	H3	W1	W2	W3
CMZB440	45.1 [1.776]	45.1 [1.776]	140.4 [5.528]	50.2 [1.976]	74 [2.913]	150 [5.906]	224 [8.819]	35 [1.378]	33.5 [1.319]	68.5 [2.697]
CMZB550	55.1 [2.169]	55.1 [2.169]	170.4 [6.709]	60.2 [2.370]	79.5 [3.130]	166 [6.535]	245.5 [9.665]	35 [1.378]	35 [1.378]	70 [2.756]

● CMZB440-[RM] [RD]
● CMZB550-[RM] [RD]

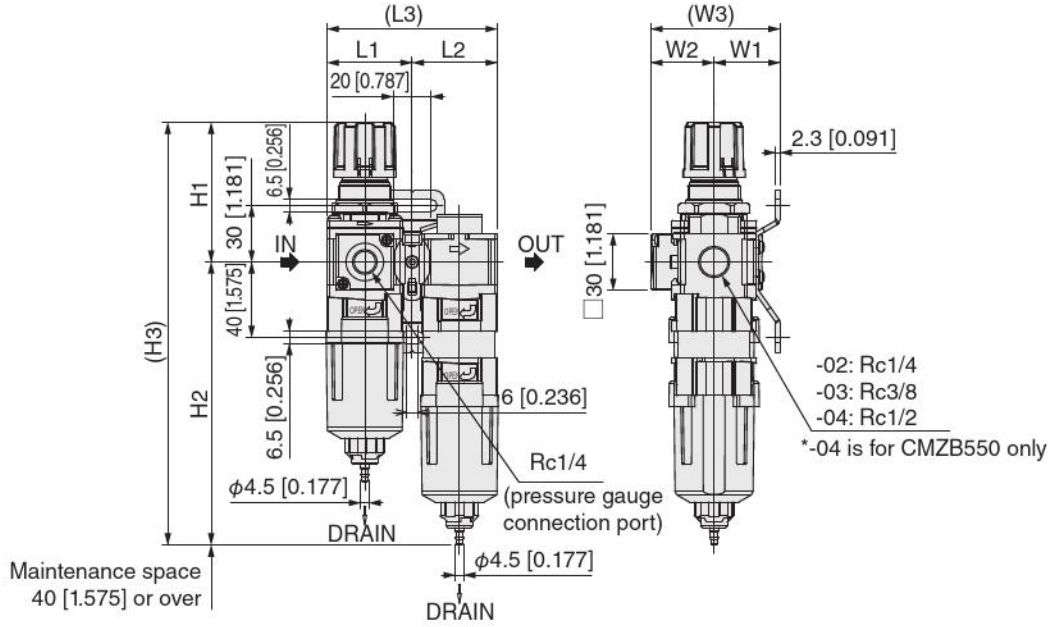

Combination type	L1	L2	L3	H1	H2	H3	W1	W2	W3
CMZB440	45.1 [1.776]	45.1 [1.776]	90.2 [3.551]	74 [2.913]	150 [5.906]	224 [8.819]	35 [1.378]	33.5 [1.319]	68.5 [2.697]
CMZB550	55.1 [2.169]	55.1 [2.169]	110.2 [4.339]	79.5 [3.130]	166 [6.535]	245.5 [9.665]	35 [1.378]	35 [1.378]	70 [2.756]

● CMZB440·550 configuration diagram

: Connection fittings with brackets

Component	Options	Configuration diagram	Options	Configuration diagram
CR	No options	IBCY D FRZB	-V	IBCY D FRZB D 50VZ
	-PSF	IBCY DPS FRZB	-V -PSF	IBCY DPS FRZB D 50VZ
	-PSR	IBCY D FRZB DPS SP	-V -PSR	IBCY D FRZB DPS 50VZ
	-T	IBCY D TP D FRZB	-V -T	IBCY D TP F FRZB D 50VZ
	-PSF -T	IBCY DPS TP D FRZB	-V -PSF -T	IBCY DPS TP F FRZB D 50VZ
	-PSR -T	IBCY D TP F FRZB DPS SP	-V -PSR -T	IBCY D TP F FRZB DPS 50VZ

Component	Options	Configuration diagram	Options	Configuration diagram
CRM CRD	No options	① D ② D ③	-V	① D ② F ③ D 50VZ
	-PSF	① DPS ② D ③	-V -PSF	① DPS ② F ③ D 50VZ
	-PSR	① D ② DPS ③	-V -PSR	① D ② PS ③ D 50VZ
	-T	① D TP F ② D ③	-V -T	① D TP F ② F ③ D 50VZ
	-PSF -T	① DPS TP F ② D ③	-V -PSF -T	① DPS TP F ② F ③ D 50VZ
	-PSR -T	① D TP F ② DPS ③	-V -PSR -T	① D TP F ② PS ③ D 50VZ

Component	①	②	③
CRM	IBCY	FRZB	MFZ
CRD			MMFZ

F: F module (for connecting)
D: D module (for connecting (with bracket)
TP: Intermediate extraction block
SP: Piping adapter
PS: Pressure switch module
DPS: Pressure switch module (with bracket)
50VZ: Residual pressure exhaust valve

● CMZB440·550 configuration diagram

: Connection fittings with brackets

Component	Options	Configuration diagram	Options	Configuration diagram
RM RD	No options	① D ②	-V	① D ② D 50VZ
	-PSF	SP DPS ① D ②	-V -PSF	SP DPS ① F ② D 50VZ
	-PSR	① DPS ②	-V -PSR	① DPS ② D 50VZ
	-T	TP D ① D ②	-V -T	TP D ① F ② D 50VZ
	-PSF -T	SP DPS TP F ① D ②	-V -PSF -T	SP DPS TP F ① F ② D 50VZ
	-PSR -T	TP D ① DPS ②	-V -PSR -T	TP D ① PS ② D 50VZ

Component	①	②
RM	FRZB	MFZ
RD		MMFZ

F: F module (for connecting)
D: D module (for connecting (with bracket)
TP: Intermediate extraction block
SP: Piping adapter
PS: Pressure switch module
DPS: Pressure switch module (with bracket)
50VZ: Residual pressure exhaust valve

● CMZB440·550 Option dimension diagrams (mm [in.])

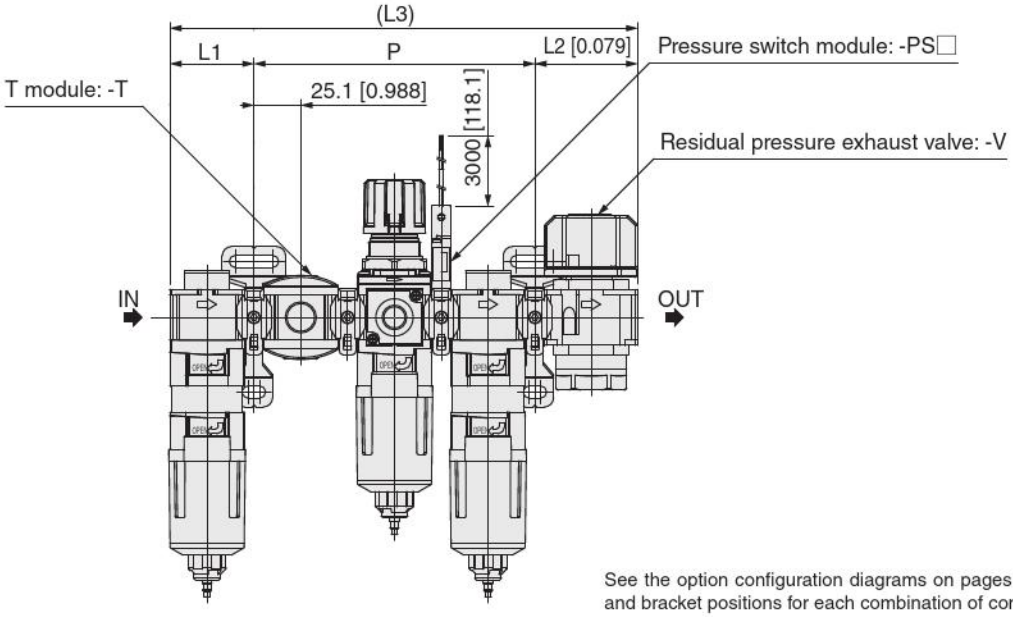

See the option configuration diagrams on pages 38-39 for option and bracket positions for each combination of components.

● Pressure gauge option

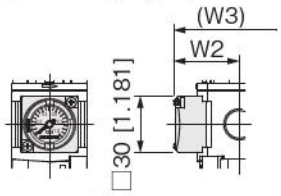

For -G1C

Combination type	-G1C □30 [1.181] integrated pressure gauge	
	W2	W3
CMZB440	35 [1.378]	70 [2.756]
CMZB550	36.5 [1.437]	71.5 [2.815]

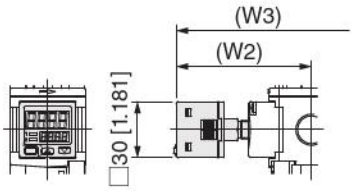

For -GS6

Combination type	-GS6 Digital pressure gauge	
	W2	W3
CMZB440	72 [2.835]	107 [4.213]
CMZB550	73.5 [2.894]	108.5 [4.272]

S When adapter is leading end
[RM] [RD]
: -PSF, -PSF-T, -V-PSF, -V-PSF-T

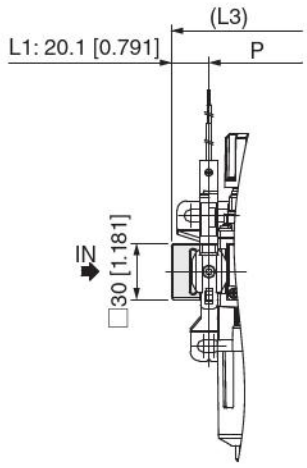

S When adapter is terminal
[CR]
: -PSR, -PSR-T

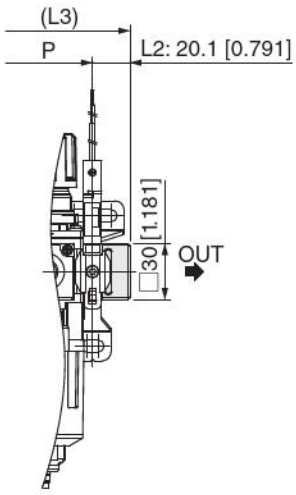

When T module is leading end
[RM] [RD]
: -T, -V-T, -PSR-T, -V-PSR-T

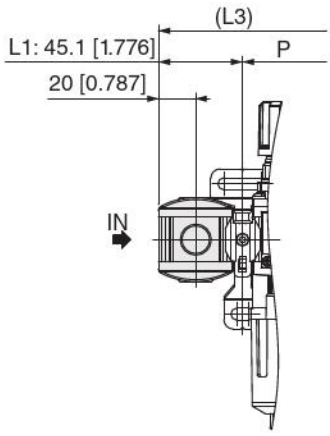

Tables of overall length (face to face) and mounting dimensions when option is selected

● CMZB440·550 Option dimension tables (mm)

Combination type	Component	-V			-T			-PSF			-PSR		
		Residual pressure exhaust valve			T module			Pressure switch module			Pressure switch module		
		L2	L3	P	L1	L3	P	L1	L3	P	L2	L3	P
CMZB440	CR	55.1	150.4	50.2	45.1	140.4	50.2	45.1	90.2	—	20.1	115.4	50.2
	CRM, CRD		200.6	100.4		190.6	100.4		140.4	50.2	45.1	140.4	50.2
	RM, RD		150.4	50.2		140.4	50.2	20.1	115.4	50.2		90.2	—
CMZB550	CR	55.1	170.4	60.2	55.1	160.4	50.2	55.1	110.2	—	20.1	135.4	60.2
	CRM, CRD		230.6	120.4		220.6	110.4		170.4	60.2	55.1	170.4	60.2
	RM, RD		170.4	60.2	45.1	160.4	60.2	20.1	135.4	60.2		110.2	—

Combination type	Component	-V-PSF				-V-PSR		
		Residual pressure exhaust valve + Pressure switch module				Residual pressure exhaust valve + Pressure switch module		
		L1	L2	L3	P	L2	L3	P
CMZB440	CR	45.1	55.1	150.4	50.2	55.1	150.4	50.2
	CRM, CRD			200.6	100.4		200.6	100.4
	RM, RD	20.1		175.6			150.4	50.2
CMZB550	CR	55.1	55.1	170.4	60.2	55.1	170.4	60.2
	CRM, CRD			230.6	120.4		230.6	120.4
	RM, RD	20.1		195.6			170.4	60.2

Combination type	Component	-PSF-T			-PSR-T			
		Pressure switch module + T module			Pressure switch module + T module			
		L1	L3	P	L1	L2	L3	P
CMZB440	CR	45.1	140.4	50.2	45.1	20.1	165.6	100.4
	CRM, CRD		190.6	100.4		45.1	190.6	
	RM, RD	20.1	165.6				140.4	50.2
CMZB550	CR	55.1	160.4	50.2	55.1	20.1	185.6	110.4
	CRM, CRD		220.6	110.4		55.1	220.6	
	RM, RD	20.1	185.6		45.1		160.4	60.2

Combination type	Component	-V-T				-V-PSF-T				-V-PSR-T			
		Residual pressure exhaust valve + T module				Residual pressure exhaust valve + Pressure switch module + T module				Residual pressure exhaust valve + Pressure switch module + T module			
		L1	L2	L3	P	L1	L2	L3	P	L1	L2	L3	P
CMZB440	CR	45.1	55.1	200.6	100.4	45.1	55.1	200.6	100.4	45.1	55.1	200.6	100.4
	CRM, CRD			250.8	150.6			250.8	150.6			250.8	150.6
	RM, RD			200.6	100.4	20.1		225.8				200.6	100.4
CMZB550	CR	55.1	55.1	220.6	110.4	55.1	55.1	220.6	110.4	55.1	55.1	220.6	110.4
	CRM, CRD			280.8	170.6			280.8	170.6			280.8	170.6
	RM, RD	45.1		220.6	120.4	20.1		245.8		45.1		220.6	120.4

* The shaded dimensions are the same value as when there are no options.

Tables of overall length (face to face) and mounting dimensions when option is selected

● CMZB440·550 Option dimension tables (in.)

Combination type	Component	-V			-T			-PSF			-PSR		
		Residual pressure exhaust valve			T module			Pressure switch module			Pressure switch module		
		L2	L3	P	L1	L3	P	L1	L3	P	L2	L3	P
CMZB440	CR	2.169	5.921	1.976	1.776	5.528	1.976	1.776	3.551	—	0.791	4.543	1.976
	CRM, CRD		7.898	3.953		7.504	3.953		5.528	1.976	1.776	5.528	1.976
	RM, RD		5.921	1.976		5.528	1.976	0.791	4.543	1.976		3.551	—
CMZB550	CR	2.169	6.709	2.370	2.169	6.315	1.976	2.169	4.339	—	0.791	5.331	2.370
	CRM, CRD		9.079	4.740		8.685	4.346		6.709	2.370	2.169	6.709	2.370
	RM, RD		6.709	2.370	1.776	6.315	2.370	0.791	5.331	2.370		4.339	—

Combination type	Component	-V-PSF				-V-PSR		
		Residual pressure exhaust valve + Pressure switch module				Residual pressure exhaust valve + Pressure switch module		
		L1	L2	L3	P	L2	L3	P
CMZB440	CR	1.776	2.169	5.921	1.976	2.169	5.921	1.976
	CRM, CRD			7.898	3.953		7.898	3.953
	RM, RD	0.791		6.913			5.921	1.976
CMZB550	CR	2.169	2.169	6.709	2.370	2.169	6.709	2.370
	CRM, CRD			9.079	4.740		9.079	4.740
	RM, RD	0.791		7.701			6.709	2.370

Combination type	Component	-PSF-T			-PSR-T			
		Pressure switch module + T module			Pressure switch module + T module			
		L1	L3	P	L1	L2	L3	P
CMZB440	CR	1.776	5.528	1.976	1.776	0.791	6.520	3.953
	CRM, CRD		7.504	3.953		1.776	7.504	
	RM, RD	0.791	6.520				5.528	1.976
CMZB550	CR	2.169	6.315	1.976	2.169	0.791	7.307	4.346
	CRM, CRD		8.685	4.346		2.169	8.685	
	RM, RD	0.791	7.307		1.776		6.315	2.370

Combination type	Component	-V-T				-V-PSF-T				-V-PSR-T			
		Residual pressure exhaust valve + T module				Residual pressure exhaust valve + Pressure switch module + T module				Residual pressure exhaust valve + Pressure switch module + T module			
		L1	L2	L3	P	L1	L2	L3	P	L1	L2	L3	P
CMZB440	CR	1.776	2.169	7.898	3.953	1.776	2.169	7.898	3.953	1.776	2.169	7.898	3.953
	CRM, CRD			9.874	5.929			9.874	5.929			9.874	5.929
	RM, RD			7.898	3.953	0.791		8.890				7.898	3.953
CMZB550	CR	2.169	2.169	8.685	4.346	2.169	2.169	8.685	4.346	2.169	2.169	8.685	4.346
	CRM, CRD			11.055	6.717			11.055	6.717			11.055	6.717
	RM, RD	1.776		8.685	4.740	0.791		9.677		1.776		8.685	4.740

* The shaded dimensions are the same value as when there are no options.

CMZ

High-End Compact Combinations

Specifications

Model		Standard	CMZ440	CMZ540	CMZ550
		For low pressure	CMZ441	CMZ541	CMZ551
Media			Air		
Port size		Rc	1/8, 1/4, 3/8	1/4, 3/8	1/4, 3/8, 1/2
Maximum operating pressure		MPa [psi]	1.0 [145]		
Proof pressure		MPa [psi]	1.5 [218]		
Operating pressure range	MPa [psi]	Standard	0.05 to 0.85 [7 to 123]		
		For low pressure	0.05 to 0.40 [7 to 58]		
Operating temperature range (atmospheric and medium)		℃ [°F]	5 to 60 [41 to 140] (medium must not freeze)		

Specifications by component

● CMZ44□/CMZ54□/CMZ55□

Component model code	CR(Blank)[Note 3]			CRM			CRD		
Combination type	CMZ44□	CMZ54□	CMZ55□	CMZ44□	CMZ54□	CMZ55□	CMZ44□	CMZ54□	CMZ55□
Component combinations	IBCY40	IBCY50		IBCY40	IBCY50		IBCY40	IBCY50	
	FRZ4□		FRZ5□	FRZ4□		FRZ5□	FRZ4□		FRZ5□
	—			MFZ40	MFZ50		MMFZ40	MMFZ50	
Water separation rate %	99 or more (under rated conditions)								
Filtration μm	5			0.3			0.01		
Particle filtering efficiency %	—			99.9			99.9999		
Secondary oil mist concentration[Note 1] mg/m³	—			1.0 or less			0.01 or less		
Maximum flow rate[Note 2] L/min (ANR) [ft³/min (SCFM)]	1500 [52.980]	1900 [67.108]	2500 [88.300]	300 [10.596]	750 [26.490]		150 [5.298]	400 [14.128]	
Weight kg [lb]	0.46 [1.014]	0.56 [1.235]	0.65 [1.433]	0.69 [1.521]	0.9 [1.985]	0.99 [2.183]	0.69 [1.521]	0.9 [1.985]	0.99 [2.183]

Component model code	RM			RD		
Combination type	CMZ44□	CMZ54□	CMZ55□	CMZ44□	CMZ54□	CMZ55□
Component combinations	FRZ4□		FRZ5□	FRZ4□		FRZ5□
	MFZ40	MFZ50		MMFZ40	MMFZ50	
Filtration μm	0.3			0.01		
Particle filtering efficiency %	99.9			99.9999		
Secondary oil mist concentration[Note 1] mg/m³	1.0 or less			0.01 or less		
Maximum flow rate[Note 2] L/min (ANR) [ft³/min (SCFM)]	300 [10.596]	750 [26.490]		150 [5.298]	400 [14.128]	
Weight kg [lb]	0.43 [0.948]	0.54 [1.191]	0.63 [1.389]	0.43 [0.948]	0.54 [1.191]	0.63 [1.389]

Note 1: Value when the primary-side oil mist concentration is 30 mg/m³.
2: Value when the primary-side pressure is 0.7 MPa [102 psi] and regulator set pressure is 0.6 MPa [87 psi].
3: If the component model code is left [Blank], it will be the same product as [CR].
4: If CR (blank), CRM, or CRD is selected as the component model code, then ensure that the supply pressure is above 0.15 MPa [22 psi] if auto drain is selected as an option. (Supply pressure is needed to operate the auto drain.)
5: For details about each combined component, refer to the page for that product in this catalog.

● High-End Compact Combinations

CMZ □ □ – □ – □ – □ – □ – □ □ – □ – □ – □

Direction of flow
Blank —— Specifications (left to right)
R —— Reverse flow (right to left)

Bowl specifications
Blank —— No bowl selected (Components: when RM or RD is selected)

A —— Auto drain N.O.
C —— Auto drain N.C.
N —— Drain cock with fitting
} If the component is left blank or either CR, CRM, or CRD, one of these must be selected

* A, C, and N are the specifications for IBCY in the configuration. (Components: RM and RD cannot be selected)
The MFZ and MMFZ are short bowl specifications for all selection codes.

T module
Blank —None
T —Just before regulator
* For models with pressure switch module (PSF, PSW), installation is between the switch and the regulator

Lead wire length
A —1000 mm [39.370 in.]
B —3000 mm [118.1 in.]

Pressure switch module*
Blank —— None
PSF —— Just before regulator
PSR —— Just after regulator
PSW —— Just before/after regulator
} The length of lead wires must be selected.

* Pressure switch modules have a pressure setting range of 0.1 to 0.4 MPa [15 to 58 psi].
Check the control method before selection.
See page 144 for details about specifications.

Pressure gauge specifications
Blank —— No pressure gauge (with pressure gauge connection port, Rc1/4)
GN —— No pressure gauge (no pressure gauge connection port)
G1C —— 1 MPa [145 psi] specifications, □30 [1.181] integrated pressure gauge
G4C —— 0.4 MPa [58 psi] specifications, □30 [1.181] integrated pressure gauge
G1 —— 1 MPa [145 psi] specifications, ϕ40 [1.575] pressure gauge
G3 —— 0.3 MPa [44 psi] specifications, ϕ40 [1.575] pressure gauge
G1S —— 1 MPa [145 psi] specifications, ϕ40 [1.575] stainless steel bourdon tube pressure gauge
G3S —— 0.3 MPa [44 psi] specifications, ϕ40 [1.575] stainless steel bourdon tube pressure gauge
GS1A —— 1 MPa [145 psi] specifications □50 [1.969] pressure gauge with built-in switch, lead wire system, for 24 VDC
GS1B —— 1 MPa [145 psi] specifications □50 [1.969] pressure gauge with built-in switch, lead wire system, for 100 VAC, 200 VAC
GS1C —— 1 MPa [145 psi] specifications □50 [1.969] pressure gauge with built-in switch, with DIN system contacts, for 24 VDC
GS1D —— 1 MPa [145 psi] specifications □50 [1.969] pressure gauge with built-in switch, DIN system contacts, for 100 VAC, 200 VAC
GS6 —— 1 MPa [145 psi] specifications, digital pressure switch

Port size
01 —— Rc1/8 (only CMZ44□ can be selected)
02 —— Rc1/4
03 —— Rc3/8
04 —— Rc1/2 (only CMZ55□ can be selected)

Residual pressure exhaust valve
Blank —— None
V —— With residual pressure exhaust valve (installed at secondary-side terminal)

Component

Code		Component		
Blank	–	IBCY	FRZ	—
CR	–	IBCY	FRZ	—
CRM	–	IBCY	FRZ	MFZ
CRD	–	IBCY	FRZ	MMFZ
RM	–	—	FRZ	MFZ
RD	–	—	FRZ	MMFZ

Note: If the component model code is left [Blank], it will be the same product as [CR].

Pressure specifications
0 —— Standard
1 —— Low pressure specification

Body size

Code		IBCY·MFZ·MMFZ body size	FRZ body size
44	–	40 size	40 size
54	–	50 size	40 size
55	–	50 size	50 size

CMZ —— High-End Compact Combinations

* These graphs show the maximum pipe diameters.

● CMZ44□-[CR]

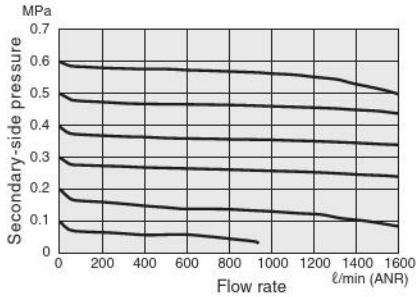

● CMZ54□-[CR]

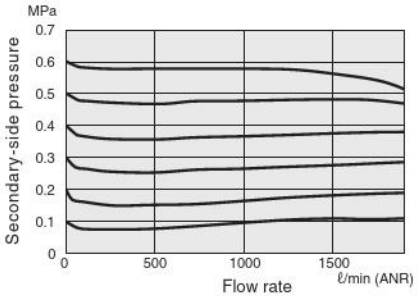

● CMZ55□-[CR]

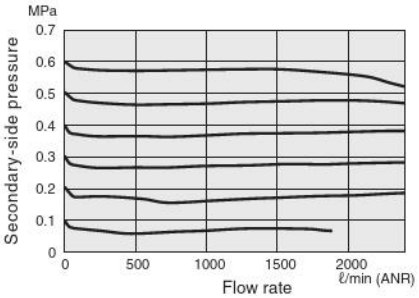

● CMZ44□-[CRM] [RM]

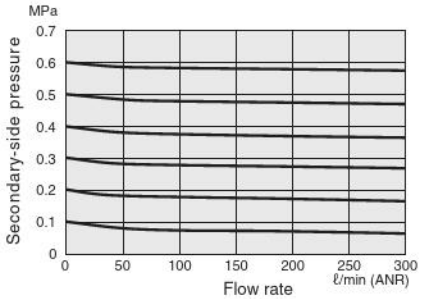

● CMZ54□-[CRM] [RM]

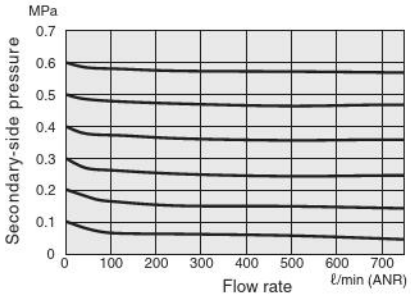

● CMZ55□-[CRM] [RM]

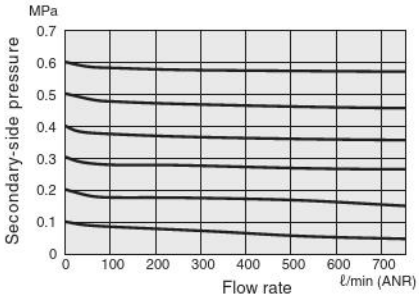

● CMZ44□-[CRD] [RD]

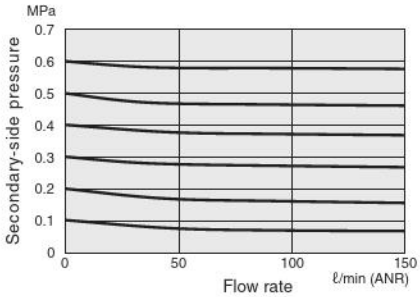

● CMZ54□-[CRD] [RD]

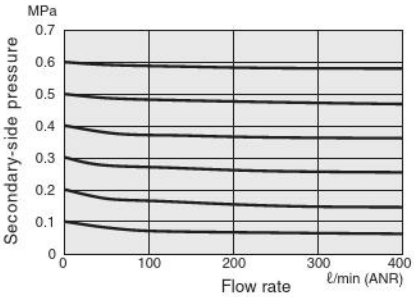

● CMZ55□-[CRD] [RD]

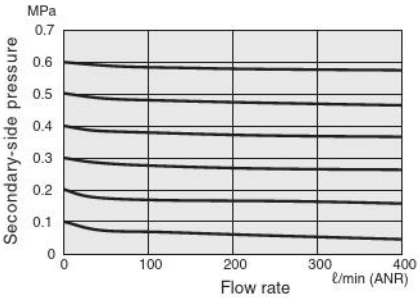

Basic dimensions (mm [in.])

● CMZ44□-[CR]
● CMZ54□-[CR]
● CMZ55□-[CR]

* If the component model code is left [Blank], it will be the same product as [CR].

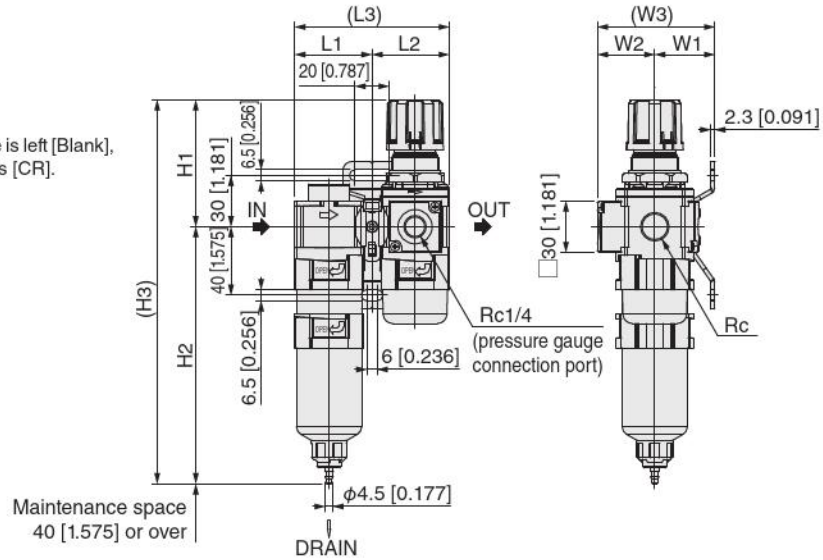

Combination type	L1	L2	L3	H1	H2	H3	W1	W2	W3	Rc
CMZ44□	45.1 [1.776]	45.1 [1.776]	90.2 [3.551]	74 [2.913]	150 [5.906]	224 [8.819]	35 [1.378]	33.5 [1.319]	68.5 [2.697]	01: Rc1/8 02: Rc1/4 03: Rc3/8
CMZ54□	55.1 [2.169]	45.1 [1.776]	100.2 [3.945]	74 [2.913]	166 [6.535]	240 [9.449]	35 [1.378]	33.5 [1.319]	68.5 [2.697]	02: Rc1/4 03: Rc3/8
CMZ55□	55.1 [2.169]	55.1 [2.169]	110.2 [4.339]	79.5 [3.130]	166 [6.535]	245.5 [9.665]	35 [1.378]	35 [1.378]	70 [2.756]	02: Rc1/4 03: Rc3/8 04: Rc1/2

● CMZ44□-[CRM] [CRD]
● CMZ54□-[CRM] [CRD]
● CMZ55□-[CRM] [CRD]

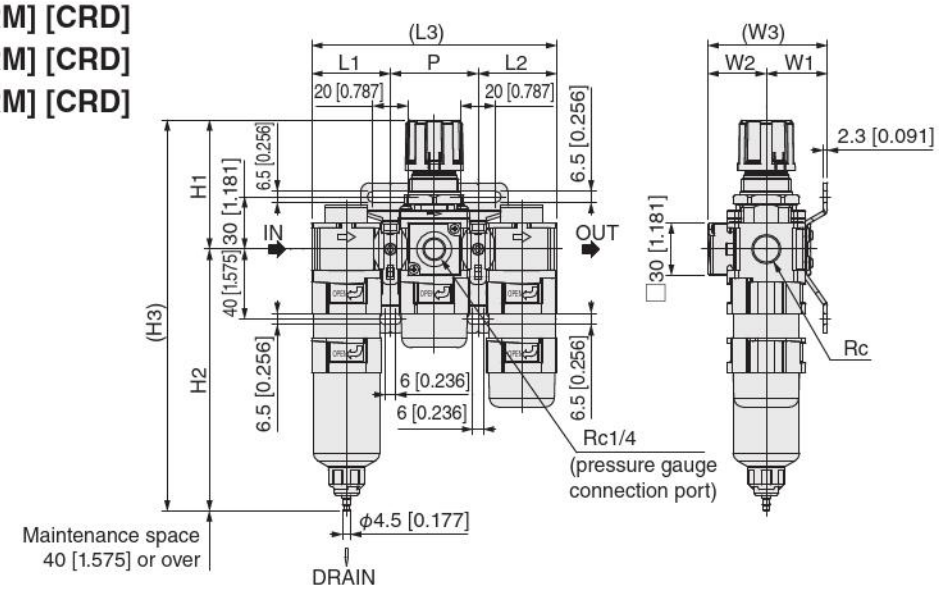

Combination type	L1	L2	L3	P	H1	H2	H3	W1	W2	W3	Rc
CMZ44□	45.1 [1.776]	45.1 [1.776]	140.4 [5.528]	50.2 [1.976]	74 [2.913]	150 [5.906]	224 [8.819]	35 [1.378]	33.5 [1.319]	68.5 [2.697]	01: Rc1/8 02: Rc1/4 03: Rc3/8
CMZ54□	55.1 [2.169]	55.1 [2.169]	160.4 [6.315]	50.2 [1.976]	74 [2.913]	166 [6.535]	240 [9.449]	35 [1.378]	33.5 [1.319]	68.5 [2.697]	02: Rc1/4 03: Rc3/8
CMZ55□	55.1 [2.169]	55.1 [2.169]	170.4 [6.709]	60.2 [2.370]	79.5 [3.130]	166 [6.535]	245.5 [9.665]	35 [1.378]	35 [1.378]	70 [2.756]	02: Rc1/4 03: Rc3/8 04: Rc1/2

● **CMZ44□-[RM] [RD]**
● **CMZ54□-[RM] [RD]**
● **CMZ55□-[RM] [RD]**

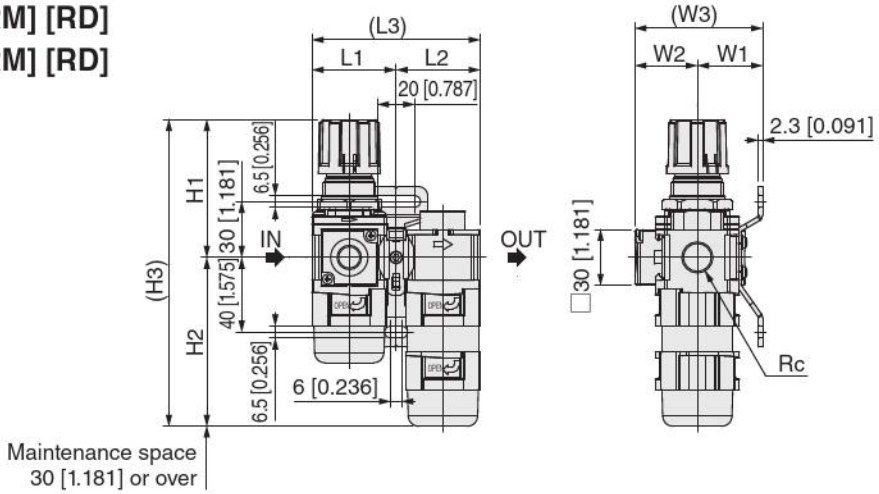

Combination type	L1	L2	L3	H1	H2	H3	W1	W2	W3	Rc
CMZ44□	45.1 [1.776]	45.1 [1.776]	90.2 [3.551]	74 [2.913]	90.5 [3.563]	164.5 [6.476]	35 [1.378]	33.5 [1.319]	68.5 [2.697]	01: Rc1/8 02: Rc1/4 03: Rc3/8
CMZ54□	45.1 [1.776]	55.1 [2.169]	100.2 [3.945]	74 [2.913]	118 [4.646]	192 [7.559]	35 [1.378]	33.5 [1.319]	68.5 [2.697]	02: Rc1/4 03: Rc3/8
CMZ55□	55.1 [2.169]	55.1 [2.169]	110.2 [4.339]	79.5 [3.130]	118 [4.646]	197.5 [7.776]	35 [1.378]	35 [1.378]	70 [2.756]	02: Rc1/4 03: Rc3/8 04: Rc1/2

● CMZ44□·54□·55□ configuration diagram

: Connection fittings with brackets

Component	Options	Configuration diagram	Options	Configuration diagram
CR (Blank)	No options	IBCY D FRZ	-V	IBCY D FRZ D 50VZ
	-PSF	IBCY DPS FRZ	-V -PSF	IBCY DPS FRZ D 50VZ
	-PSR	IBCY D FRZ DPS SP	-V -PSR	IBCY D FRZ DPS 50VZ
	-PSW	IBCY DPS FRZ DPS SP	-V -PSW	IBCY DPS FRZ DPS 50VZ
	-T	IBCY D TP D FRZ	-V -T	IBCY D TP F FRZ D 50VZ
	-PSF -T	IBCY DPS TP D FRZ	-V -PSF -T	IBCY DPS TP F FRZ D 50VZ
	-PSR -T	IBCY D TP F FRZ DPS SP	-V -PSR -T	IBCY D TP F FRZ DPS 50VZ
	-PSW -T	IBCY DPS TP F FRZ DPS SP	-V -PSW -T	IBCY DPS TP F FRZ DPS 50VZ

Component	Options	Configuration diagram	Options	Configuration diagram
CRM CRD	No options	① D ② D ③	-V	① D ② F ③ D 50VZ
	-PSF	① DPS ② D ③	-V -PSF	① DPS ② F ③ D 50VZ
	-PSR	① D ② DPS ③	-V -PSR	① D ② PS ③ D 50VZ
	-PSW	① DPS ② DPS ③	-V -PSW	① DPS ② PS ③ D 50VZ
	-T	① D TP F ② D ③	-V -T	① D TP F ② F ③ D 50VZ
	-PSF -T	① DPS TP F ② D ③	-V -PSF -T	① DPS TP F ② F ③ D 50VZ
	-PSR -T	① D TP F ② DPS ③	-V -PSR -T	① D TP F ② PS ③ D 50VZ
	-PSW -T	① DPS TP F ② DPS ③	-V -PSW -T	① DPS TP F ② PS ③ D 50VZ

Component	①	②	③
CRM	IBCY	FRZ	MFZ
CRD			MMFZ

F: F module (for connecting)
D: D module (for connecting (with bracket)
TP: Intermediate extraction block
SP: Piping adapter
PS: Pressure switch module
DPS: Pressure switch module (with bracket)
50VZ: Residual pressure exhaust valve

● CMZ44□·54□·55□ configuration diagram

: Connection fittings with brackets

Component	Options	Configuration diagram	Options	Configuration diagram
RM RD	No options	① D ②	-V	① D ② D 50VZ
	-PSF	SP DPS ① D ②	-V -PSF	SP DPS ① F ② D 50VZ
	-PSR	① DPS ②	-V -PSR	① DPS ② D 50VZ
	-PSW	SP DPS ① DPS ②	-V -PSW	SP DPS ① PS ② D 50VZ
	-T	TP D ① D ②	-V -T	TP D ① F ② D 50VZ
	-PSF -T	SP DPS TP F ① D ②	-V -PSF -T	SP DPS TP F ① F ② D 50VZ
	-PSR -T	TP D ① DPS ②	-V -PSR -T	TP D ① PS ② D 50VZ
	-PSW -T	SP DPS TP F ① DPS ②	-V -PSW -T	SP DPS TP F ① PS ② D 50VZ

Component	①	②
RM	FRZ	MFZ
RD		MMFZ

F: F module (for connecting)
D: D module (for connecting (with bracket)
TP: Intermediate extraction block
SP: Piping adapter
PS: Pressure switch module
DPS: Pressure switch module (with bracket)
50VZ: Residual pressure exhaust valve

● CMZ44□·54□·55□ Option dimension diagrams (mm [in.])

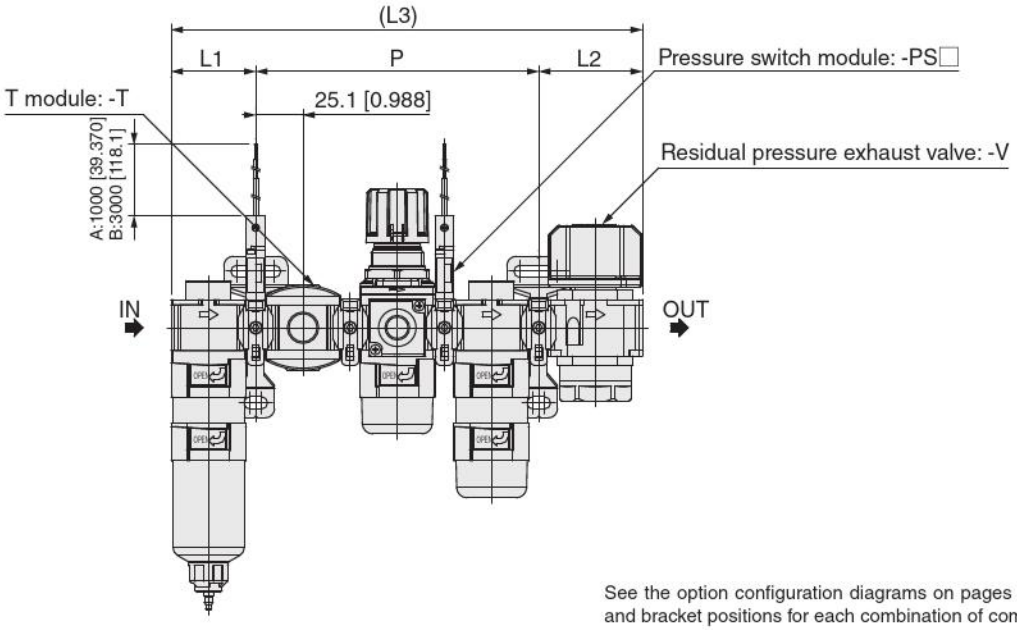

See the option configuration diagrams on pages 48-49 for option and bracket positions for each combination of components.

S When adapter is leading end
[RM] [RD]
: -PSF, -PSF-T, -V-PSF, -V-PSF-T

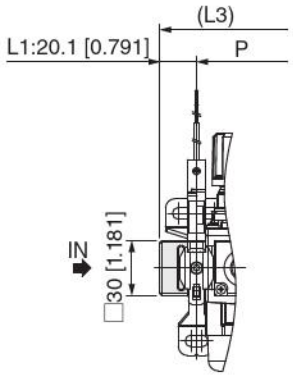

S When adapter is terminal
[CR]
: -PSR, -PSR-T

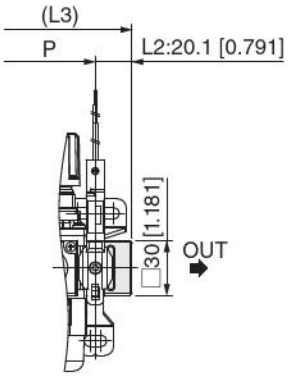

When T module is leading end
[RM] [RD]
: -T, -V-T, -PSR-T, -V-PSR-T

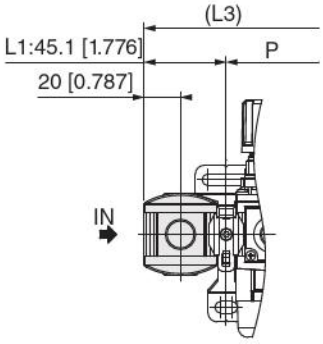

● CMZ44□·54□·55□ Option dimension diagrams (mm [in.])

● Pressure gauge option

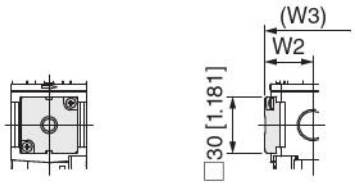

For **-GN**

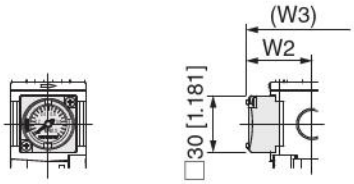

For **-G1C**, **-G4C**

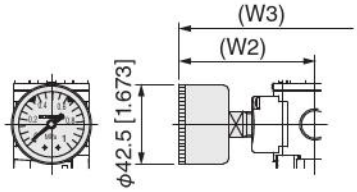

For **-G1**, **-G3**

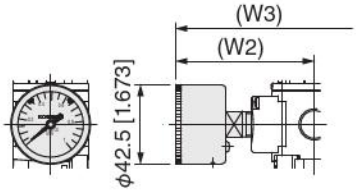

For **-G1S** and **-G3S**

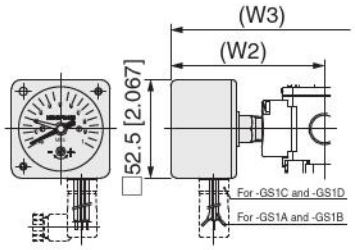

For **-GS1A**, **-GS1B**, **-GS1C** and **-GS1D**

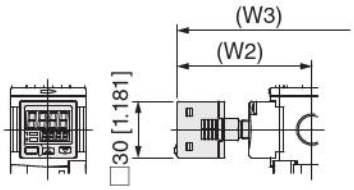

For **-GS6**

Combination type	-GN		-G1C, -G4C		-G1, -G3		-G1S, -G3S		-GS1□		-GS6	
	No pressure gauge		□30 [1.181] integrated pressure gauge		ϕ40 [1.575] pressure gauge		ϕ40 [1.575] Stainless steel bourdon tube pressure gauge		□50 [1.969] Pressure gauge with built-in switch		Digital pressure gauge	
	W2	**W3**	**W2**	**W3**	**W2**	**W3**	**W2**	**W3**	**W2**	**W3**	**W2**	**W3**
CMZ44□	25.5 [1.004]	60.5 [2.382]	35 [1.378]	70 [2.756]	72.5 [2.854]	107.5 [4.232]	74 [2.913]	109 [4.291]	82 [3.228]	117 [4.606]	72 [2.835]	107 [4.213]
CMZ54□	25.5 [1.004]	60.5 [2.382]	35 [1.378]	70 [2.756]	72.5 [2.854]	107.5 [4.232]	74 [2.913]	109 [4.291]	82 [3.228]	117 [4.606]	72 [2.835]	107 [4.213]
CMZ55□	27 [1.063]	62 [2.441]	36.5 [1.437]	71.5 [2.815]	74 [2.913]	109 [4.291]	75.5 [2.972]	110.5 [4.350]	83.5 [3.287]	118.5 [4.665]	73.5 [2.894]	108.5 [4.272]

Tables of overall length (face to face) and mounting dimensions when option is selected

● CMZ44□·54□·55□ Option dimension tables (mm)

Combination type	Component	-V			-T			-PSF			-PSR			-PSW			
		Residual pressure exhaust valve			T module			Pressure switch module			Pressure switch module			Pressure switch module			
		L2	L3	P	L1	L3	P	L1	L3	P	L2	L3	P	L1	L2	L3	P
CMZ44□	CR (Blank)	55.1	150.4	50.2	45.1	140.4	50.2	45.1	90.2	—	20.1	115.4	50.2	45.1	20.1	115.4	50.2
	CRM, CRD		200.6	100.4		190.6	100.4		140.4	50.2	45.1	140.4	50.2		45.1	140.4	50.2
	RM, RD		150.4	50.2		140.4	50.2	20.1	115.4	50.2		90.2	—	20.1		115.4	50.2
CMZ54□	CR (Blank)	55.1	160.4	50.2	55.1	150.4	50.2	55.1	100.2	—	20.1	125.4	50.2	55.1	20.1	125.4	50.2
	CRM, CRD	55.1	220.6	110.4		210.6	100.4		160.4	50.2	55.1	160.4	50.2		55.1	160.4	50.2
	RM, RD		160.4	60.2	45.1	150.4	50.2	20.1	125.4	50.2		100.2	—	20.1		125.4	50.2
CMZ55□	CR (Blank)	55.1	170.4	60.2	55.1	160.4	50.2	55.1	110.2	—	20.1	135.4	60.2	55.1	20.1	135.4	60.2
	CRM, CRD		230.6	120.4		220.6	110.4		170.4	60.2	55.1	170.4	60.2		55.1	170.4	60.2
	RM, RD		170.4	60.2	45.1	160.4	60.2	20.1	135.4	60.2		110.2	—	20.1		135.4	60.2

Combination type	Component	-V-PSF				-V-PSR			-V-PSW			
		Residual pressure exhaust valve + Pressure switch module				Residual pressure exhaust valve + Pressure switch module			Residual pressure exhaust valve + Pressure switch module			
		L1	L2	L3	P	L2	L3	P	L1	L2	L3	P
CMZ44□	CR (Blank)	45.1	55.1	150.4	50.2	55.1	150.4	50.2	45.1	55.1	150.4	50.2
	CRM, CRD			200.6	100.4		200.6	100.4			200.6	100.4
	RM, RD	20.1		175.6			150.4	50.2	20.1		175.6	
CMZ54□	CR (Blank)	55.1	55.1	160.4	50.2	55.1	160.4	50.2	55.1	55.1	160.4	50.2
	CRM, CRD		55.1	220.6	110.4	55.1	220.6	110.4		55.1	220.6	110.4
	RM, RD	20.1		185.6			160.4	60.2	20.1		185.6	
CMZ55□	CR (Blank)	55.1	55.1	170.4	60.2	55.1	170.4	60.2	55.1	55.1	170.4	60.2
	CRM, CRD			230.6	120.4		230.6	120.4			230.6	120.4
	RM, RD	20.1		195.6			170.4	60.2	20.1		195.6	

Combination type	Component	-PSF-T			-PSR-T				-PSW-T			
		Pressure switch module + T module			Pressure switch module + T module				Pressure switch module + T module			
		L1	L3	P	L1	L2	L3	P	L1	L2	L3	P
CMZ44□	CR (Blank)	45.1	140.4	50.2	45.1	20.1	165.6	100.4	45.1	20.1	165.6	100.4
	CRM, CRD		190.6	100.4		45.1	190.6			45.1	190.6	
	RM, RD	20.1	165.6				140.4	50.2	20.1		165.6	
CMZ54□	CR (Blank)	55.1	150.4	50.2	55.1	20.1	175.6	100.4	55.1	20.1	175.6	100.4
	CRM, CRD		210.6	100.4		55.1	210.6			55.1	210.6	
	RM, RD	20.1	175.6		45.1		150.4	50.2	20.1		175.6	
CMZ55□	CR (Blank)	55.1	160.4	50.2	55.1	20.1	185.6	110.4	55.1	20.1	185.6	110.4
	CRM, CRD		220.6	110.4		55.1	220.6			55.1	220.6	
	RM, RD	20.1	185.6		45.1		160.4	60.2	20.1		185.6	

Combination type	Component	-V-T				-V-PSF-T				-V-PSR-T				-V-PSW-T			
		Residual pressure exhaust valve + T module				Residual pressure exhaust valve + Pressure switch module + T module				Residual pressure exhaust valve + Pressure switch module + T module				Residual pressure exhaust valve + Pressure switch module + T module			
		L1	L2	L3	P	L1	L2	L3	P	L1	L2	L3	P	L1	L2	L3	P
CMZ44□	CR (Blank)	45.1	55.1	200.6	100.4	45.1	55.1	200.6	100.4	45.1	55.1	200.6	100.4	45.1	55.1	200.6	100.4
	CRM, CRD			250.8	150.6			250.8	150.6			250.8	150.6			250.8	150.6
	RM, RD			200.6	100.4	20.1		225.8				200.6	100.4	20.1		225.8	
CMZ54□	CR (Blank)	55.1	55.1	210.6	100.4	55.1	55.1	210.6	100.4	55.1	55.1	210.6	100.4	55.1	55.1	210.6	100.4
	CRM, CRD		55.1	270.8	160.6			270.8	160.6			270.8	160.6			270.8	160.6
	RM, RD	45.1		210.6	110.4	20.1		235.8		45.1		210.6	110.4	20.1		235.8	
CMZ55□	CR (Blank)	55.1	55.1	220.6	110.4	55.1	55.1	220.6	110.4	55.1	55.1	220.6	110.4	55.1	55.1	220.6	110.4
	CRM, CRD			280.8	170.6			280.8	170.6			280.8	170.6			280.8	170.6
	RM, RD	45.1		220.6	120.4	20.1		245.8		45.1		220.6	120.4	20.1		245.8	

* The shaded dimensions are the same value as when there are no options.

Tables of overall length (face to face) and mounting dimensions when option is selected

● CMZ44□·54□·55□ Option dimension tables (in.)

Combination type	Component	-V			-T			-PSF			-PSR			-PSW			
		Residual pressure exhaust valve			T module			Pressure switch module			Pressure switch module			Pressure switch module			
		L2	L3	P	L1	L3	P	L1	L3	P	L2	L3	P	L1	L2	L3	P
CMZ44□	CR (Blank)	2.169	5.921	1.976	1.776	5.528	1.976	1.776	3.551	—	0.791	4.543	1.976	1.776	0.791	4.543	1.976
	CRM, CRD		7.898	3.953		7.504	3.953		5.528	1.976	1.776	5.528	1.976		1.776	5.528	1.976
	RM, RD		5.921	1.976		5.528	1.976	0.791	4.543	1.976		3.551	—	0.791		4.543	1.976
CMZ54□	CR (Blank)	2.169	6.315	1.976	2.169	5.921	1.976	2.169	3.945	—	0.791	4.937	1.976	2.169	0.791	4.937	1.976
	CRM, CRD	2.169	8.685	4.346		8.291	3.953		6.315	1.976	2.169	6.315	1.976		2.169	6.315	1.976
	RM, RD		6.315	2.370	1.776	5.921	1.976	0.791	4.937	1.976		3.945	—	0.791		4.937	1.976
CMZ55□	CR (Blank)	2.169	6.709	2.370	2.169	6.315	1.976	2.169	4.339	—	0.791	5.331	2.370	2.169	0.791	5.331	2.370
	CRM, CRD		9.079	4.740		8.685	4.346		6.709	2.370	2.169	6.709	2.370		2.169	6.709	2.370
	RM, RD		6.709	2.370	1.776	6.315	2.370	0.791	5.331	2.370		4.339	—	0.791		5.331	2.370

Combination type	Component	-V-PSF				-V-PSR			-V-PSW			
		Residual pressure exhaust valve + Pressure switch module				Residual pressure exhaust valve + Pressure switch module			Residual pressure exhaust valve + Pressure switch module			
		L1	L2	L3	P	L2	L3	P	L1	L2	L3	P
CMZ44□	CR (Blank)	1.776	2.169	5.921	1.976	2.169	5.921	1.976	1.776	2.169	5.921	1.976
	CRM, CRD			7.898	3.953		7.898	3.953			7.898	3.953
	RM, RD	0.791		6.913			5.921	1.976	0.791		6.913	
CMZ54□	CR (Blank)	2.169	2.169	6.315	1.976	2.169	6.315	1.976	2.169	2.169	6.315	1.976
	CRM, CRD		2.169	8.685	4.346	2.169	8.685	4.346		2.169	8.685	4.346
	RM, RD	0.791		7.307			6.315	2.370	0.791		7.307	
CMZ55□	CR (Blank)	2.169	2.169	6.709	2.370	2.169	6.709	2.370	2.169	2.169	6.709	2.370
	CRM, CRD			9.079	4.740		9.079	4.740			9.079	4.740
	RM, RD	0.791		7.701			6.709	2.370	0.791		7.701	

Combination type	Component	-PSF-T			-PSR-T				-PSW-T			
		Pressure switch module + T module			Pressure switch module + T module				Pressure switch module + T module			
		L1	L3	P	L1	L2	L3	P	L1	L2	L3	P
CMZ44□	CR (Blank)	1.776	5.528	1.976	1.776	0.791	6.520	3.953	1.776	0.791	6.520	3.953
	CRM, CRD		7.504	3.953		1.776	7.504			1.776	7.504	
	RM, RD	0.791	6.520				5.528	1.976	0.791		6.520	
CMZ54□	CR (Blank)	2.169	5.921	1.976	2.169	0.791	6.913	3.953	2.169	0.791	6.913	3.953
	CRM, CRD		8.291	3.953		2.169	8.291			2.169	8.291	
	RM, RD	0.791	6.913		1.776		5.921	1.976	0.791		6.913	
CMZ55□	CR (Blank)	2.169	6.315	1.976	2.169	0.791	7.307	4.346	2.169	0.791	7.307	4.346
	CRM, CRD		8.685	4.346		2.169	8.685			2.169	8.685	
	RM, RD	0.791	7.307		1.776		6.315	2.370	0.791		7.307	

Combination type	Component	-V-T				-V-PSF-T				-V-PSR-T				-V-PSW-T			
		Residual pressure exhaust valve + T module				Residual pressure exhaust valve + Pressure switch module + T module				Residual pressure exhaust valve + Pressure switch module + T module				Residual pressure exhaust valve + Pressure switch module + T module			
		L1	L2	L3	P	L1	L2	L3	P	L1	L2	L3	P	L1	L2	L3	P
CMZ44□	CR (Blank)	1.776	2.169	7.898	3.953	1.776	2.169	7.898	3.953	1.776	2.169	7.898	3.953	1.776	2.169	7.898	3.953
	CRM, CRD			9.874	5.929			9.874	5.929			9.874	5.929			9.874	5.929
	RM, RD			7.898	3.953	0.791		8.890				7.898	3.953	0.791		8.890	
CMZ54□	CR (Blank)	2.169	2.169	8.291	3.953	2.169	2.169	8.291	3.953	2.169	2.169	8.291	3.953	2.169	2.169	8.291	3.953
	CRM, CRD		2.169	10.661	6.323		2.169	10.661	6.323		2.169	10.661	6.323		2.169	10.661	6.323
	RM, RD	1.776		8.291	4.346	0.791		9.283		1.776		8.291	4.346	0.791		9.283	
CMZ55□	CR (Blank)	2.169	2.169	8.685	4.346	2.169	2.169	8.685	4.346	2.169	2.169	8.685	4.346	2.169	2.169	8.685	4.346
	CRM, CRD			11.055	6.717			11.055	6.717			11.055	6.717			11.055	6.717
	RM, RD	1.776		8.685	4.740	0.791		9.677		1.776		8.685	4.740	0.791		9.677	

* The shaded dimensions are the same value as when there are no options.

CMZF

Filter Combinations

Specifications

Model		CMZF400	CMZF500
Media		Air	
Port size	Rc	1/4, 3/8	1/4, 3/8, 1/2
Maximum operating pressure	MPa [psi]	1.0 [145]	
Proof pressure	MPa [psi]	1.5 [218]	
Operating temperature range (atmospheric and medium)	℃ [°F]	5 to 60 [41 to 140] (medium must not freeze)	

Specifications by component

● CMZF400/CMZF500

Component model code		CF		CFM		CFD		CFMD	
Combination type		CMZF400	CMZF500	CMZF400	CMZF500	CMZF400	CMZF500	CMZF400	CMZF500
Component combinations		IBCY40	IBCY50	IBCY40	IBCY50	IBCY40	IBCY50	IBCY40	IBCY50
		FNZ40	FNZ50	FNZ40	FNZ50	FNZ40	FNZ50	FNZ40	FNZ50
		—		MFZ40	MFZ50	—		MFZ40	MFZ50
		—		—		MMFZ40	MMFZ50	MMFZ40	MMFZ50
Water separation rate	%	99 or more (under rated conditions)							
Filtration	μm	5		0.3		0.01		0.01	
Particle filtering efficiency	%	—		99.9		99.9999		99.9999	
Secondary oil mist concentration[Note 1]	mg/m³	—		1.0 or less		0.01 or less		0.01 or less	
Maximum flow rate[Note 2]	L/min (ANR) [ft³/min (SCFM)]	1300 [45.916]	2300 [81.236]	300 [10.596]	750 [26.490]	150 [5.298]	400 [14.128]	150 [5.298]	400 [14.128]
Weight	kg [lb]	0.48 [1.058]	0.68 [1.499]	0.75 [1.654]	1.05 [2.315]	0.75 [1.654]	1.05 [2.315]	0.99 [2.183]	1.39 [3.065]

Component model code		FM		FD		FMD		MD	
Combination type		CMZF400	CMZF500	CMZF400	CMZF500	CMZF400	CMZF500	CMZF400	CMZF500
Component combinations		FNZ40	FNZ50	FNZ40	FNZ50	FNZ40	FNZ50	—	
		MFZ40	MFZ50	—		MFZ40	MFZ50	MFZ40	MFZ50
		—		MMFZ40	MMFZ50	MMFZ40	MMFZ50	MMFZ40	MMFZ50
Filtration	μm	0.3		0.01		0.01		0.01	
Particle filtering efficiency	%	99.9		99.9999		99.9999		99.9999	
Secondary oil mist concentration[Note 1]	mg/m³	1.0 or less		0.01 or less		0.01 or less		0.01 or less	
Maximum flow rate[Note 2]	L/min (ANR) [ft³/min (SCFM)]	300 [10.596]	750 [26.490]	150 [5.298]	400 [14.128]	150 [5.298]	400 [14.128]	150 [5.298]	400 [14.128]
Weight	kg [lb]	0.48 [1.058]	0.68 [1.499]	0.48 [1.058]	0.68 [1.499]	0.75 [1.654]	1.05 [2.315]	0.48 [1.058]	0.68 [1.499]

Note 1: Value when the primary-side oil mist concentration is 30 mg/m³.
2: Value when the primary-side pressure is 0.7 MPa [102 psi].
3: Ensure that the supply pressure is above 0.15 MPa [22 psi] if auto drain is selected as an option. (Supply pressure is needed to operate the auto drain.)
4: For details about each combined component, refer to the page for that product in this catalog.
5: Use a PCT resin bowl when using products in a location with a poor atmosphere (places with a risk of exposure to cutting oil, machine oil, etc.).

● Filter Combinations

CMZF □ **0** – □ – □ – □ – □ – □

Direction of flow
Blank —— Specifications (left to right)
R —— Reverse flow (right to left)

Port size
02 —— Rc1/4
03 —— Rc3/8
04 —— Rc1/2 (only CMZF500 can be selected)

Bowl specifications
APG —— Auto drain N.O. + With bowl guard
CPG —— Auto drain N.C. + With bowl guard
NPG —— Drain cock with fitting + With bowl guard
PAPG —— PCTResin bowl + Auto drain N.O. + With bowl guard
PCPG —— PCTResin bowl + Auto drain N.C. + With bowl guard
PNPG —— PCTResin bowl + Drain cock with fitting + With bowl guard
*** IBCY, FNZ, MFZ, MMFZ have the same specifications.**

Residual pressure exhaust valve
Blank —— None
V —— With residual pressure exhaust valve (installed at secondary-side terminal)

Component

Code		Component			
CF	–	IBCY	FNZ	—	—
CFM	–	IBCY	FNZ	MFZ	—
CFD	–	IBCY	FNZ	—	MMFZ
CFMD	–	IBCY	FNZ	MFZ	MMFZ
FM	–	—	FNZ	MFZ	—
FD	–	—	FNZ	—	MMFZ
FMD	–	—	FNZ	MFZ	MMFZ
MD	–	—	—	MFZ	MMFZ

Body size

Code		IBCY·FNZ·MFZ·MMFZ body size
40	–	40 size
50	–	50 size

CMZF —— Filter Combinations

* These graphs show the maximum pipe diameters.

● CMZF400-[CF]

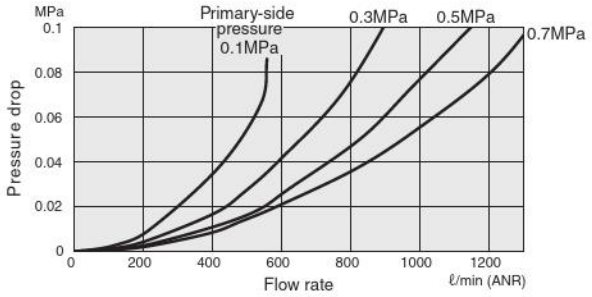

● CMZF500-[CF]

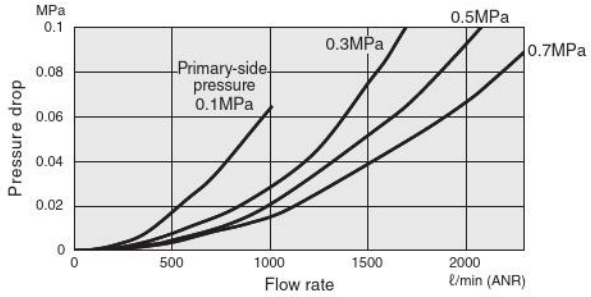

● CMZF400-[CFM] [FM]

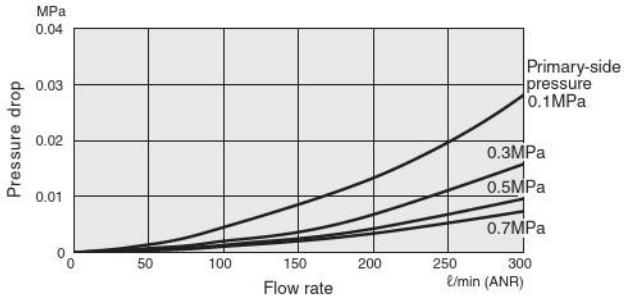

● CMZF500-[CFM] [FM]

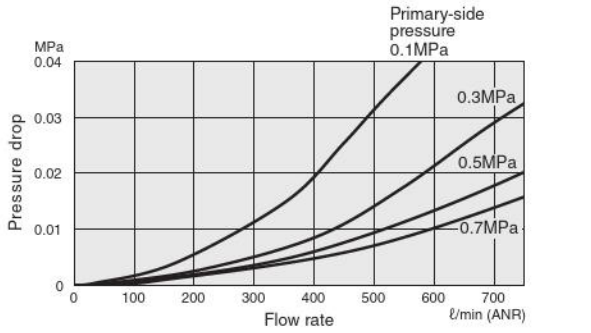

● CMZF400-[CFD] [CFMD] [FD] [FMD] [MD]

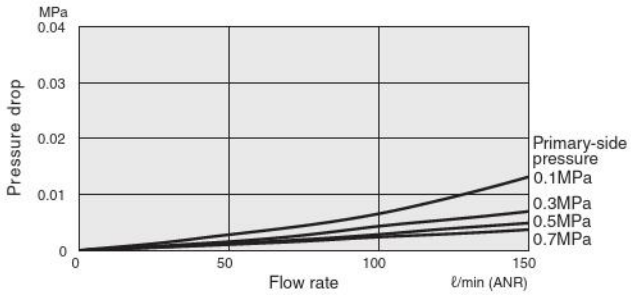

● CMZF500-[CFD] [CFMD] [FD] [FMD] [MD]

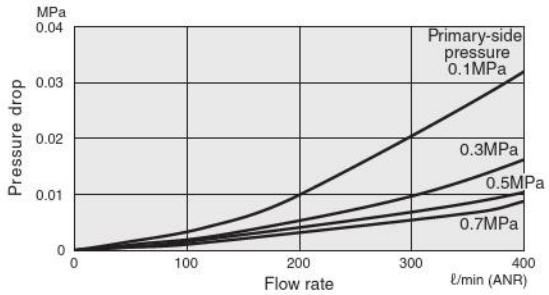

● CMZF400-[CF] [FM] [FD] [MD]
● CMZF500-[CF] [FM] [FD] [MD]

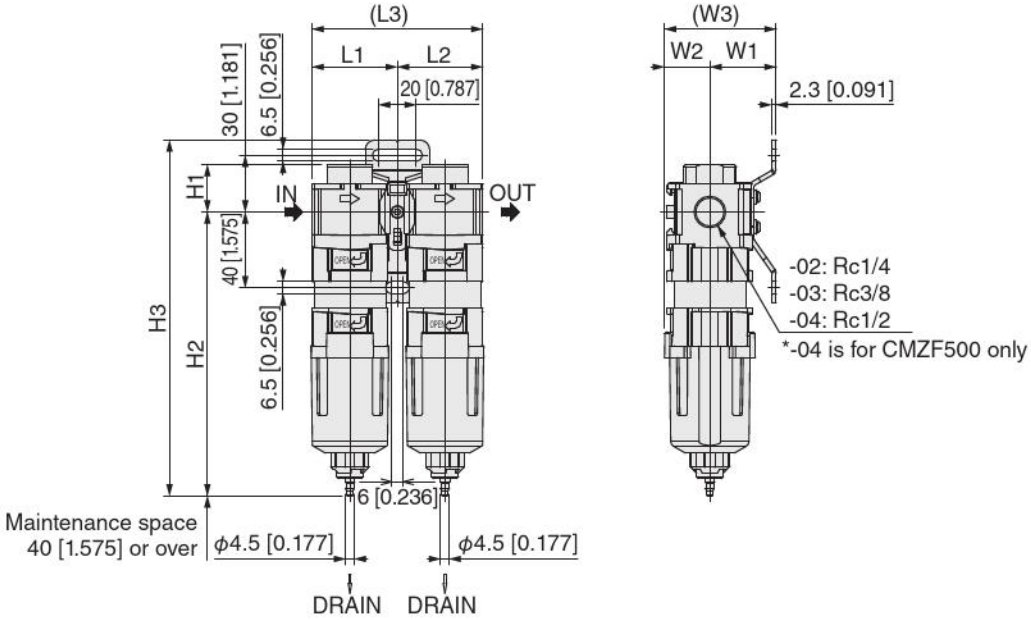

Combination type	L1	L2	L3	H1	H2	H3	W1	W2	W3
CMZF400	45.1 [1.776]	45.1 [1.776]	90.2 [3.551]	25 [0.984]	150 [5.906]	188 [7.402]	35 [1.378]	24 [0.945]	59 [2.323]
CMZF500	55.1 [2.169]	55.1 [2.169]	110.2 [4.339]	25 [0.984]	166 [6.535]	204 [8.031]	35 [1.378]	28.5 [1.122]	63.5 [2.500]

● CMZF400-[CFM] [CFD] [FMD]
● CMZF500-[CFM] [CFD] [FMD]

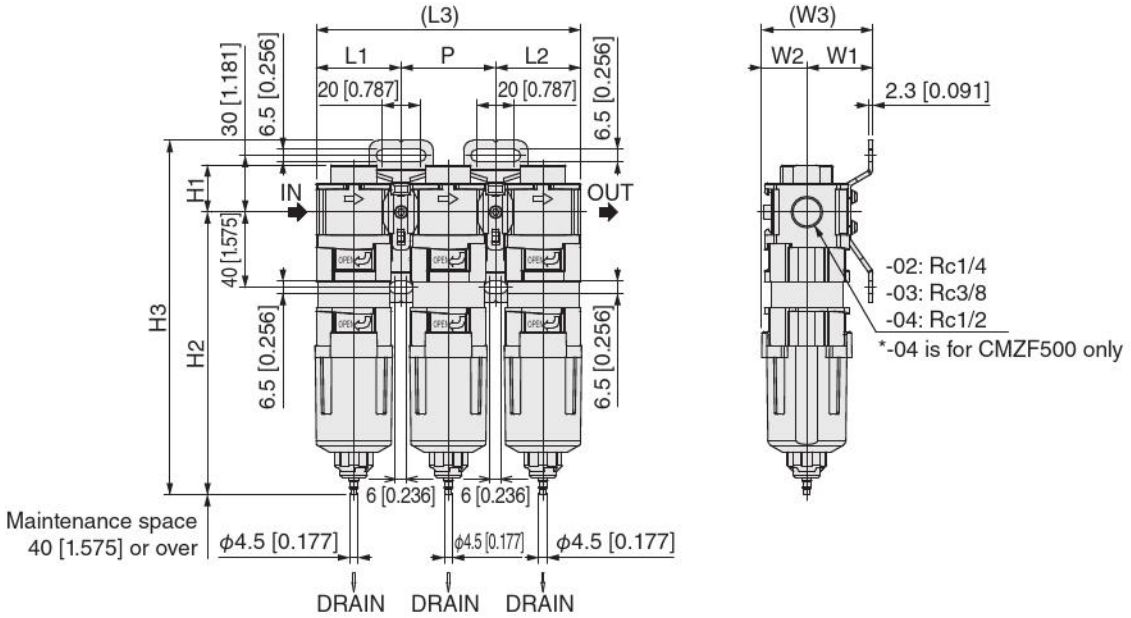

Combination type	L1	L2	L3	P	H1	H2	H3	W1	W2	W3
CMZF400	45.1 [1.776]	45.1 [1.776]	140.4 [5.528]	50.2 [1.976]	25 [0.984]	150 [5.906]	188 [7.402]	35 [1.378]	24 [0.945]	59 [2.323]
CMZF500	55.1 [2.169]	55.1 [2.169]	170.4 [6.709]	60.2 [2.370]	25 [0.984]	166 [6.535]	204 [8.031]	35 [1.378]	28.5 [1.122]	63.5 [2.500]

● CMZF400-[CFMD]
● CMZF500-[CFMD]

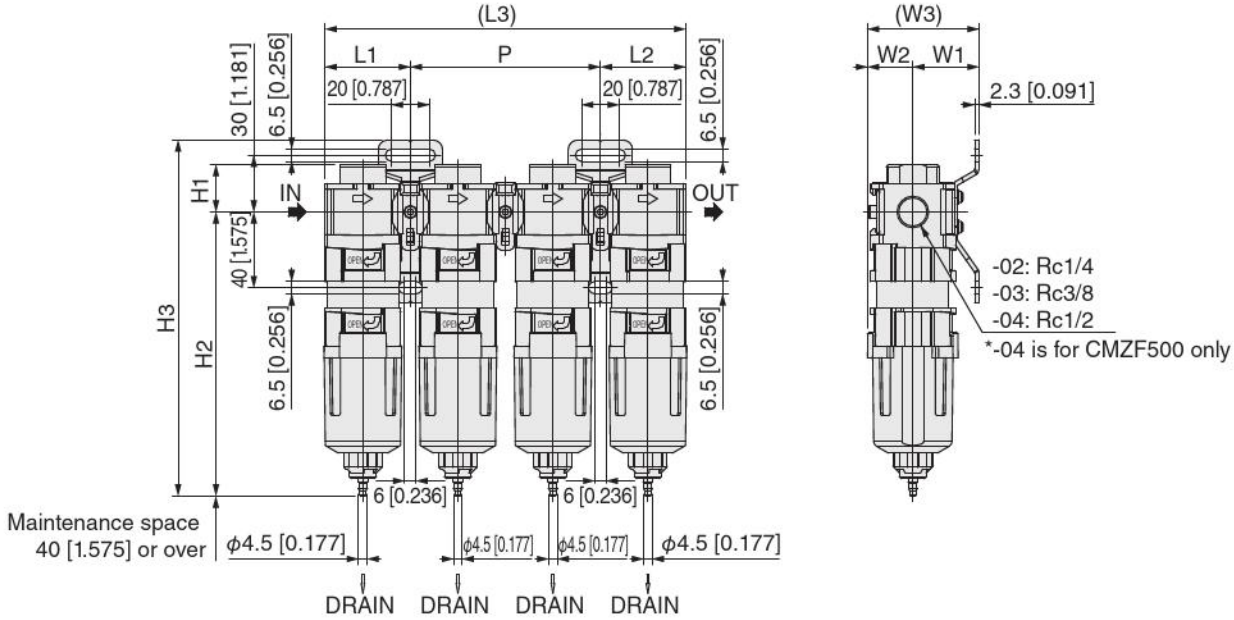

Combination type	L1	L2	L3	P	H1	H2	H3	W1	W2	W3
CMZF400	45.1 [1.776]	45.1 [1.776]	190.6 [7.504]	100.4 [3.953]	25 [0.984]	150 [5.906]	188 [7.402]	35 [1.378]	24 [0.945]	59 [2.323]
CMZF500	55.1 [2.169]	55.1 [2.169]	230.6 [9.079]	120.4 [4.740]	25 [0.984]	166 [6.535]	204 [8.031]	35 [1.378]	28.5 [1.122]	63.5 [2.500]

● CMZF400·500 configuration diagram

: Connection fittings with brackets

Component	Options	Configuration diagram	Options	Configuration diagram
CF **FM** **FD** **MD**	No options	① D ②	**-V**	① D ② D 50VZ

Component	①	②
CF	**IBCY**	**FNZ**
FM	**FNZ**	**MFZ**
FD	**FNZ**	**MMFZ**
MD	**MFZ**	**MMFZ**

Component	Options	Configuration diagram	Options	Configuration diagram
CFM **CFD** **FMD**	No options	① D ② D ③	**-V**	① D ② F ③ D 50VZ

Component	①	②	③
CFM	**IBCY**	**FNZ**	**MFZ**
CFD			**MMFZ**
FMD	**FNZ**	**MFZ**	**MMFZ**

Component	Options	Configuration diagram	Options	Configuration diagram
CFMD	No options	IBCY D FNZ F MFZ D MMFZ	**-V**	IBCY D FNZ F MFZ F MMFZ D 50VZ

F: F module (for connecting)
D: D module (for connecting (with bracket)
TP: Intermediate extraction block
SP: Piping adapter
PS: Pressure switch module
DPS: Pressure switch module (with bracket)
50VZ: Residual pressure exhaust valve

● CMZF400·500 Option dimension diagrams (mm [in.])

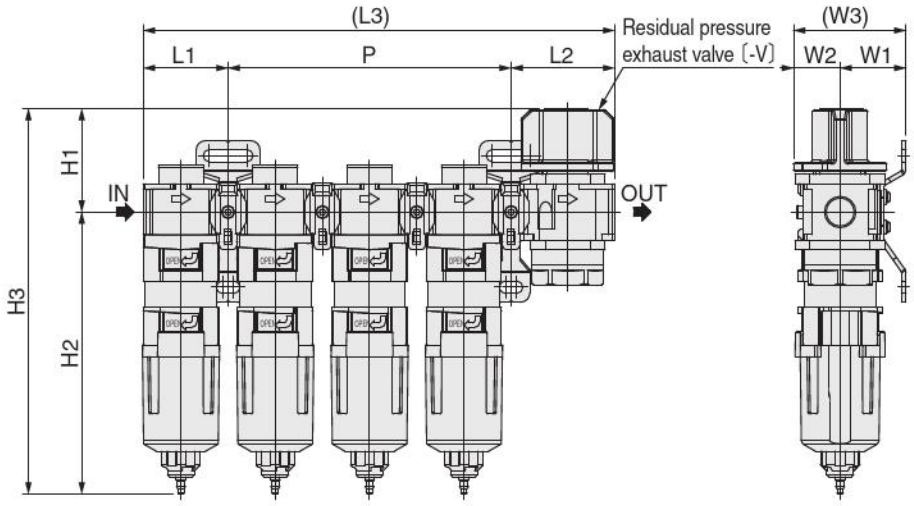

See the option configuration diagrams on page 59 for option and bracket positions for each combination of components.

Tables of overall length (face to face) and mounting dimensions when option is selected

● CMZF400·500 Option dimension tables (mm [in.])

Combination type	Component	-V						
		Residual pressure exhaust valve						
		L2	L3	P	H1	H3	W2	W3
CMZF400	CF, FM, FD, MD	55.1 [2.169]	150.4 [5.921]	50.2 [1.976]	55 [2.165]	205 [8.071]	24.8 [0.976]	59.8 [2.354]
	CFM, CFD, FMD		200.6 [7.898]	100.4 [3.953]				
	CFMD		250.8 [9.874]	150.6 [5.929]				
CMZF500	CF, FM, FD, MD	55.1 [2.169]	170.4 [6.709]	60.2 [2.370]	55 [2.165]	221 [8.701]	28.5 [1.122]	63.5 [2.500]
	CFM, CFD, FMD		230.6 [9.079]	120.4 [4.740]				
	CFMD		290.8 [11.449]	180.6 [7.110]				

* The shaded dimensions are the same value as when there are no options.

iB Series

Introducing the high-speed cyclone type water separator!

iB-Cyclone

iB Cyclone

PAT. PEND.

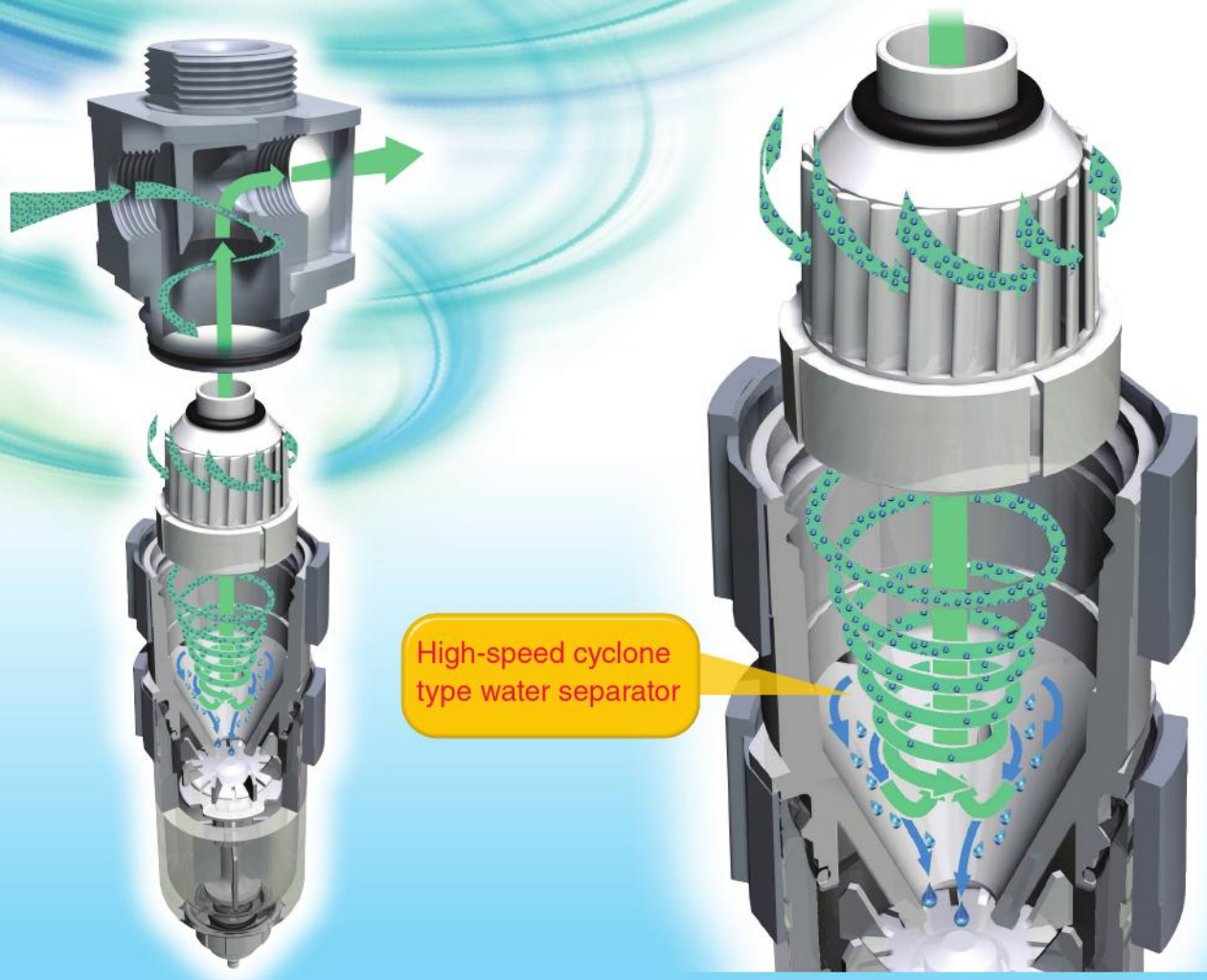

Superior water separation performance	Half the size of similar devices and over 99%[Note] water separation. Note: According to Koganei measurement standards.
Cyclone system	Expertise in centrifugal separation optimizes our **high-speed cyclone system** water separator (patent pending).
Maintainability improved	Maintenance-free because no element is used. Select NO type or NC type auto drain.
Wide flow rate range	Water separation performance demonstrated over a wide flow rate.
Compatible in a wide range of environments	Specifications for ozone resistance, NCU specifications (copper free) compatible as standard.

User Issues

- I have trouble removing water from piping
- Difficult maintenance, such as replacing elements

Koganei solves user problems with **iB-Cyclone**, which delivers new value.

iB-Cyclone uses a high-speed cyclonic system to maintain water separation rates even if flow is increased. Separation performance is always steady from low to high flow rates.

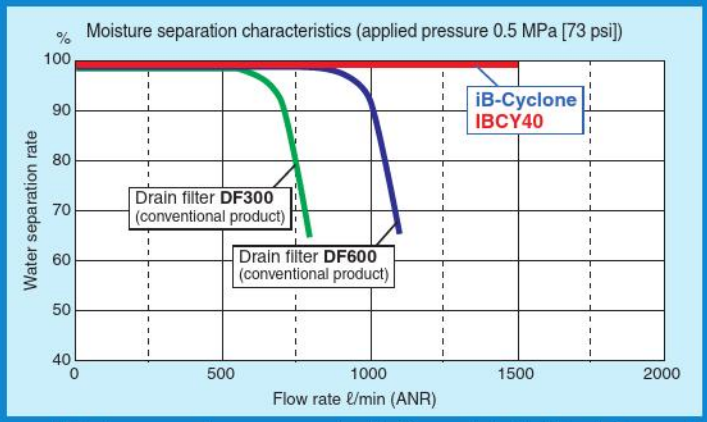

* Water separation compared with Koganei drain filter (reference).

iB-Cyclone application example

- Removing water in sub-lines and from various equipment
- Removing primary-side water from filters and regulators
- Pre-processing air supply going to membrane dryer
- Removing water from equipment extremities

* Air used must be free from oil and solids for iB-Cyclone use.

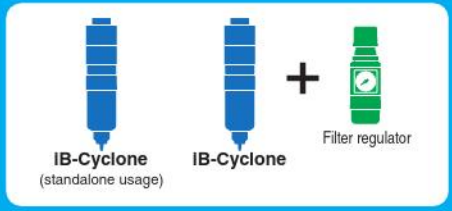

Variations and Options

IBCY30 IBCY40 IBCY50

When equipped with bowl guard

Auto drain type
NO (Normally open)
NC (Normally closed)

Drain cock with fitting

With bowl guard

With metal cover
IBCY40-□-□-□-BG
IBCY50-□-□-□-BG

Note 1: Metal cover cannot be attached to the **IBCY30**.
Note 2: When **iB-Cyclone** are connected in series in modules, the metal cover can only be attached to one side.

Bracket
8Z-CBK

iB-Cyclone

IBCY30·IBCY40·IBCY50

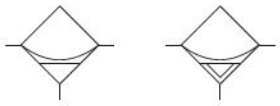

Auto drain type

With bowl guard

With metal cover

Item / Model		IBCY30	IBCY40	IBCY50
Medium		Air (Air containing no oil or solids)		
Port size	Rc	1/8, 1/4	1/8, 1/4, 3/8	1/4, 3/8, 1/2
Maximum operating pressure	MPa [psi]	1.0 [145]		
Proof pressure	MPa [psi]	1.5 [218]		
Operating temperature range (atmospheric and medium)	°C [°F]	0 to 60 [32 to 140]		
Water separation rate[Note 1]	%	99 or more		
Water collection volume (for **-N**)	mℓ [in³]	13 [0.793]	16 [0.976]	27 [1.648]
Maximum flow rate[Note 2]	ℓ/min(ANR) [ft³/min(SCFM)]	850 [30.022]	1500 [52.980]	2800 [98.896]
Materials used in major pars	Main unit	Die cast aluminum alloy		
	Bowl	PC (polycarbonate)/PCT (Polycyclohexylene-dimethylene terephthalate)[Note 3]		
	Bracket	Steel plate (electroless nickel plated)		
Weight (for standard product, maximum port size)	kg [lb]	0.15 [0.331] (0.16 [0.353])[Note 4]	0.20 [0.441] (0.21 [0.463]) <0.33 [0.728]>[Note 4]	0.30 [0.662] (0.31 [0.684]) <0.48 [1.058]>[Note 4]
Options		Bracket		

Note 1: Under Koganei measurement conditions.
2: Maximum flow rate in an environment with 0.5 MPa [73 psi] and 0.1 MPa [15 psi] pressure drop (maximum port size piping). Check the graphs of characteristics on page 65 when making a decision.
3: Use a PCT resin bowl when using products in a location with a poor atmosphere (places with a risk of exposure to cutting oil, machine oil, etc.).
4: Weights in ( ) parentheses are the weights with a bowl and weights in < > angle brackets are the weights with a metal cover.

IBCY □ – □ – □ – □ – □ – □

Bracket
Blank —— No bracket
B ——— With bracket

Bowl guard specifications
Blank —— No bowl guard
PG ——— With bowl guard (resin)
BG ——— With metal cover (**IBCY40·50** only)[Note]
Note: The **IBCY30** does not come with a metal cover.
Also, when iB-Cyclones are connected in series in modules, the metal cover can only be attached to one side.

Drain cock specifications
A ——— NO type auto drain drain cock
C ——— NC type auto drain drain cock
N ——— Drain cock with fitting

Bowl specifications
Blank —— Standard specifications (polycarbonate)
P ——— PCT resin bowl[Note]
Note: Use a PCT resin bowl when using products in a location with a poor atmosphere (places with a risk of exposure to cutting oil, machine oil, etc.).

Main unit Model	Port size Rc1/8	Rc1/4	Rc3/8	Rc1/2
30	01	02		
40	01	02	03	
50		02	03	04

iB-Cyclone

Order Codes

8Z-CBK

* Common to all body sizes

● Order Codes of Metal Covers Only

BG-IBCY□

Body size
40 — For **IBCY40**
50 — For **IBCY50**

Hexagon socket head screw
4 pcs.

● Maintenance parts

● Bowl assembly

BA-FRZB□-□-□-□

Body size
30 — For **IBCY30**
40 — For **IBCY40**
50 — For **IBCY50**

Bowl specifications
Blank — Standard specifications (polycarbonate)
P — PCT resin bowl

Drain cock specifications
A — NO type auto drain drain cock
C — NC type auto drain drain cock
N — Drain cock with fitting

Bowl guard specifications
Blank — No bowl guard
PG — With bowl guard

Auto drain type
NO type
NC type

With fitting
Drain cock

With bowl
guard

● Seal kit (O-ring (large) 2 pcs., O-ring (small) 1 pc.)

SRK-IBCY□

Body size
30 — For **IBCY30**
40 — For **IBCY40**
50 — For **IBCY50**

Separation characteristics

● 0.1 MPa [15 psi]

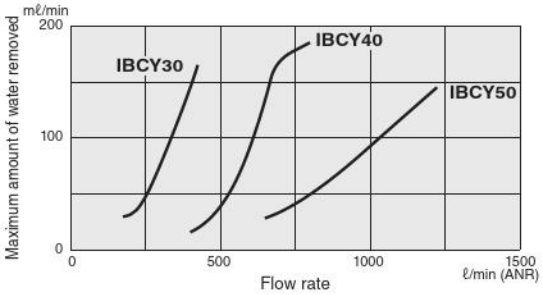

● 0.3 MPa [44 psi]

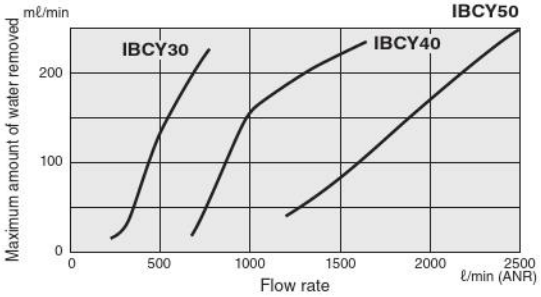

● 0.5 MPa [73 psi]

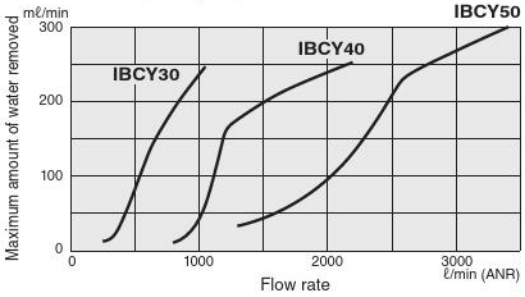

● 0.7 MPa [102 psi]

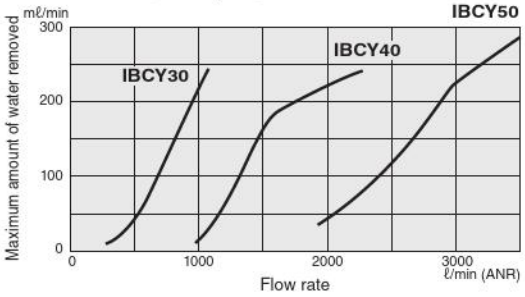

Note: The maximum amount of water removed from a volume of air in a process depends on the conditions of usage (this graph is not a guarantee). Use it as a guideline for your selection.

Flow rate characteristics

IBCY30-01

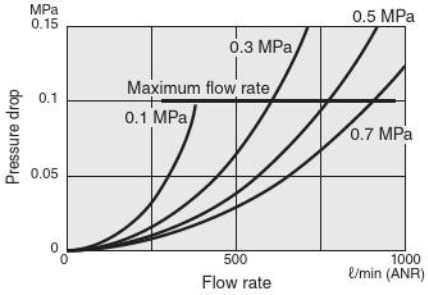

IBCY40-01

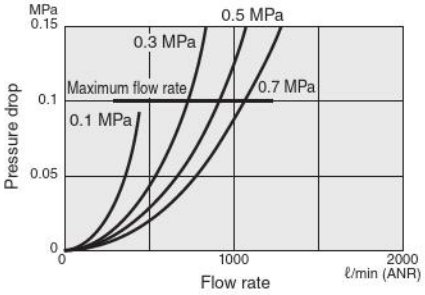

IBCY50-02

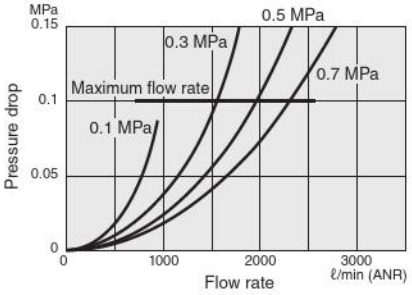

IBCY30-02

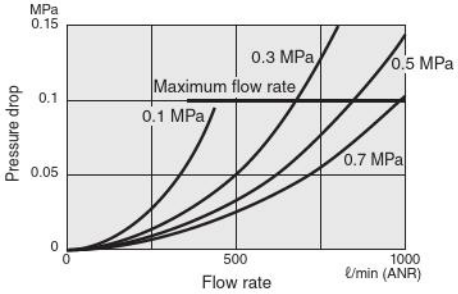

IBCY40-02

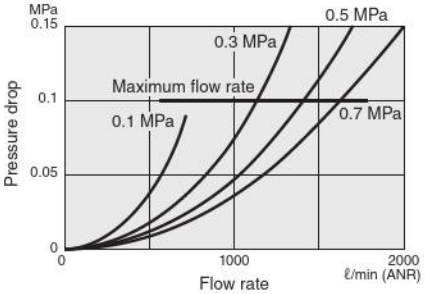

IBCY50-03

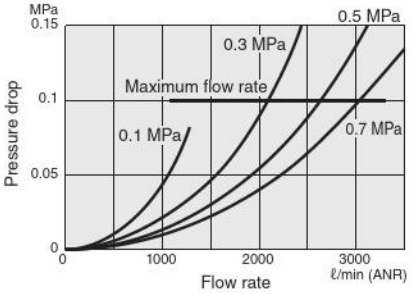

IBCY40-03

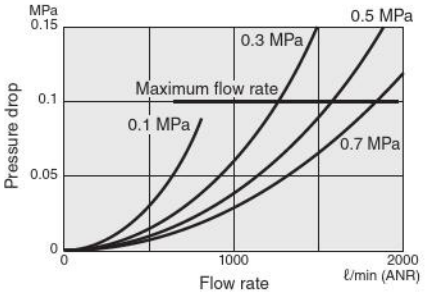

IBCY50-04

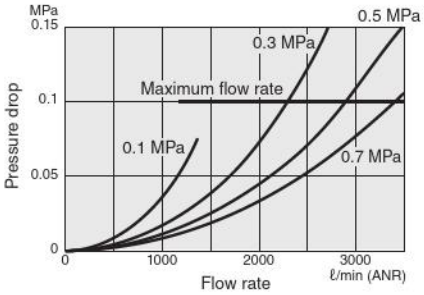

●IBCY30

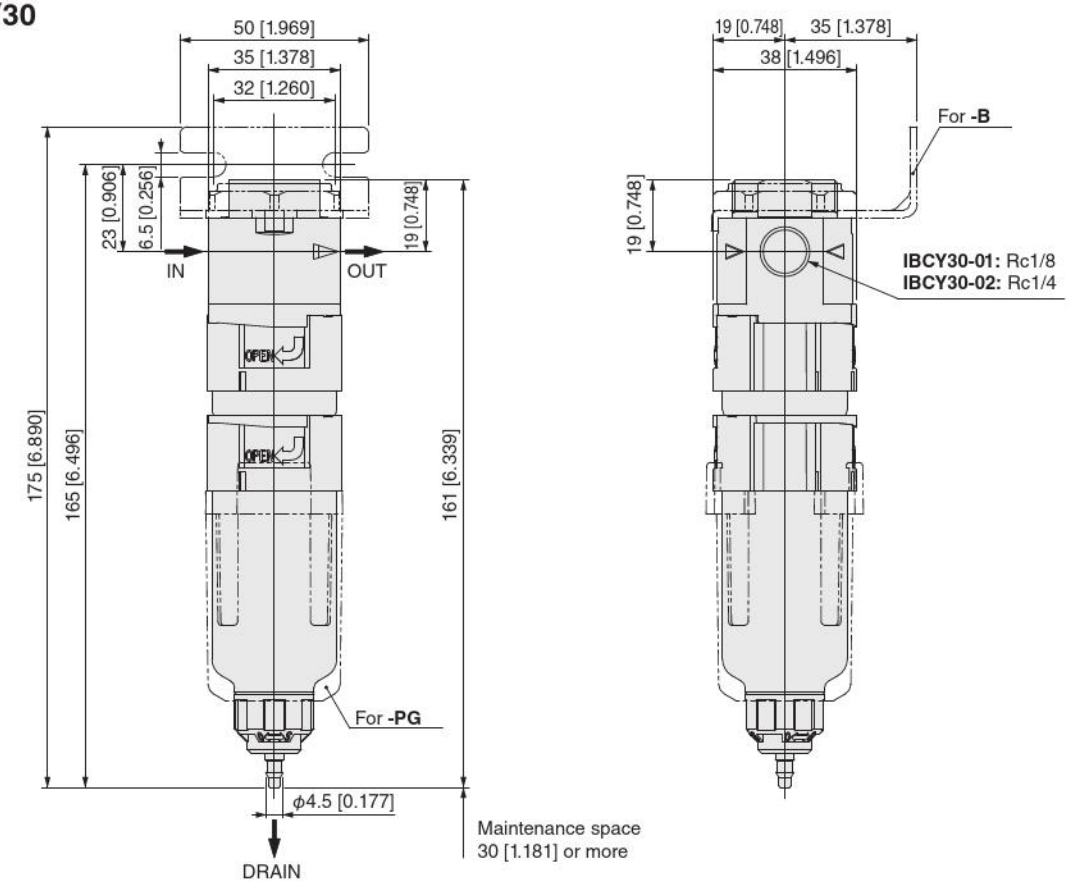

●IBCY40

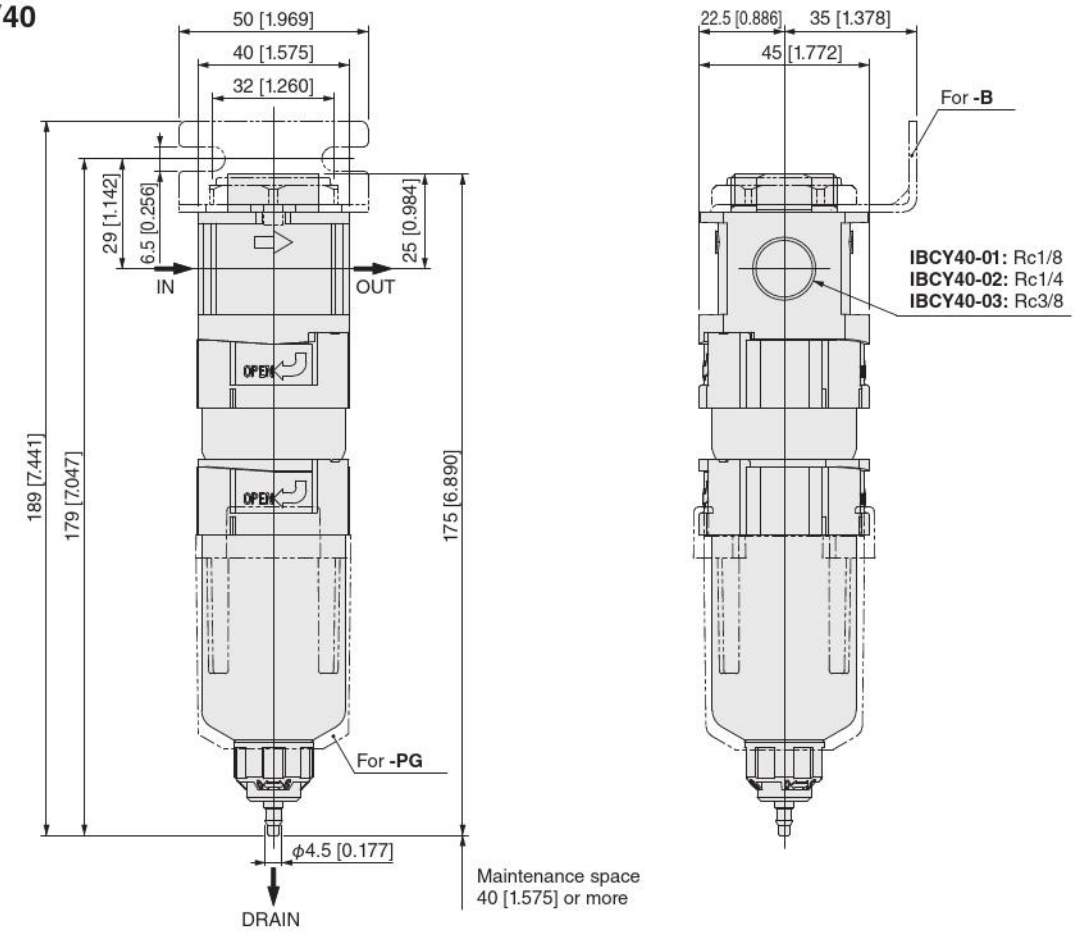

●IBCY50

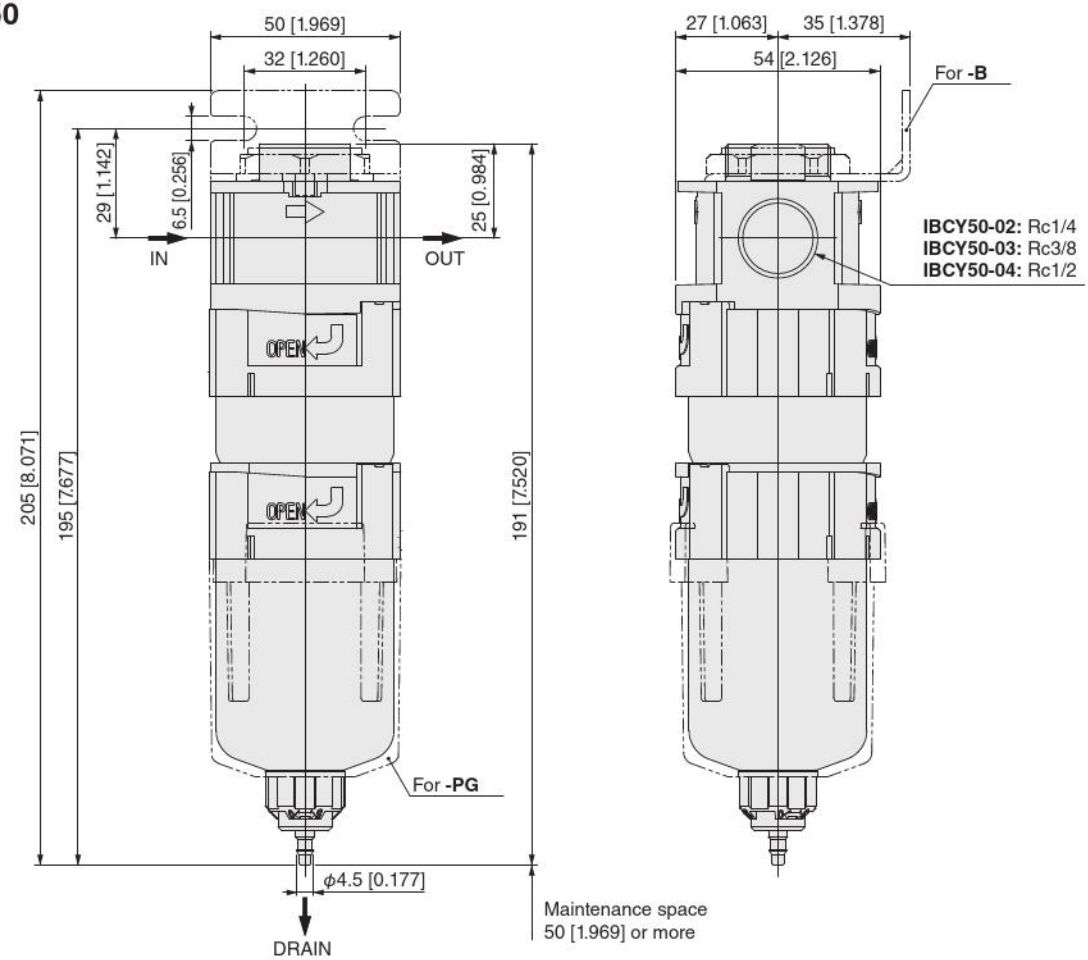

●8Z-CBK

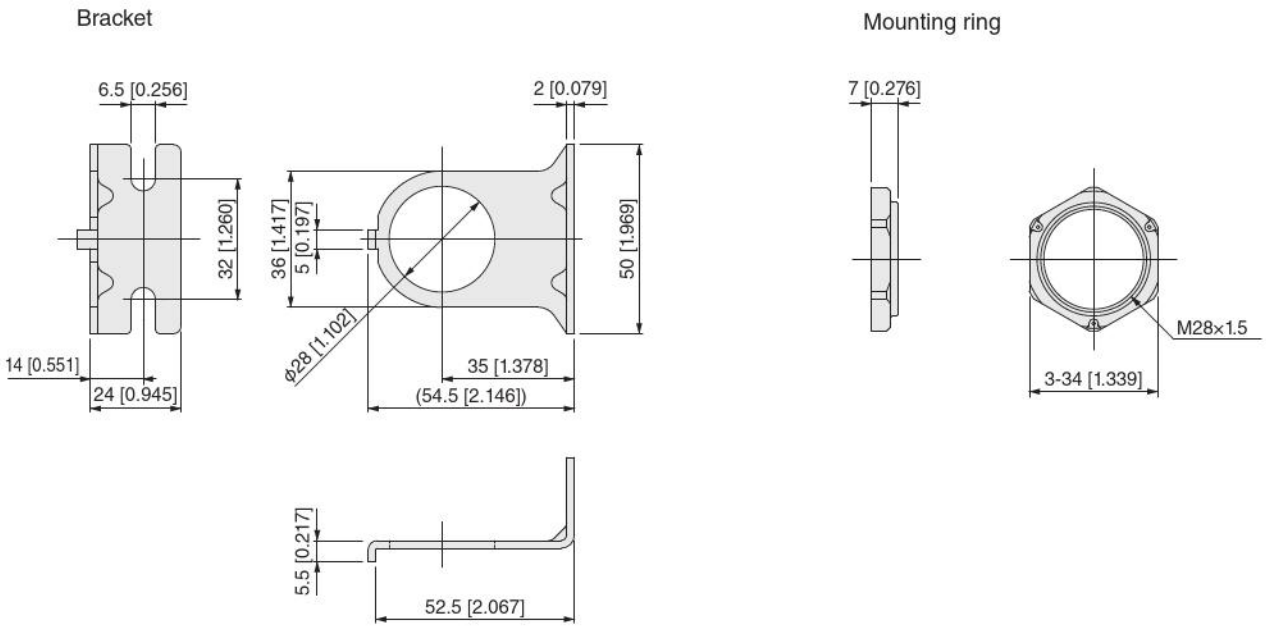

●IBCY40-□-□-BG

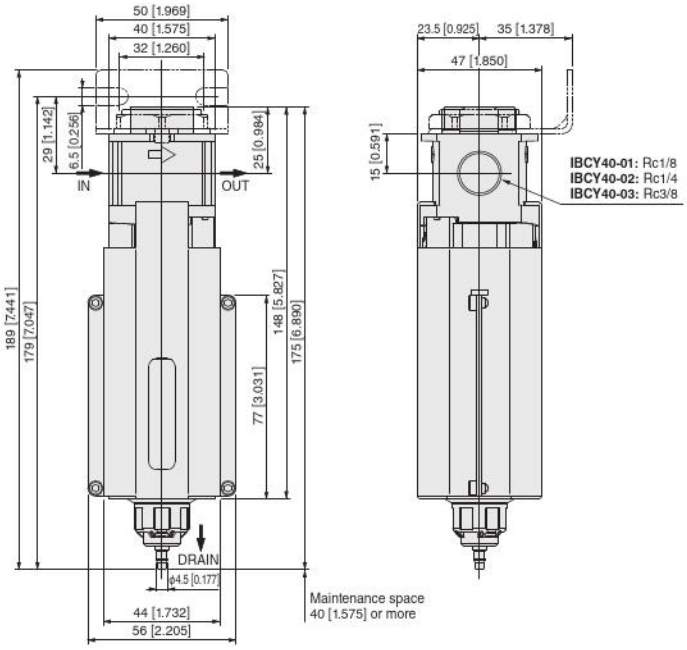

-BG: With metal cover

●BG-IBCY40

Metal cover

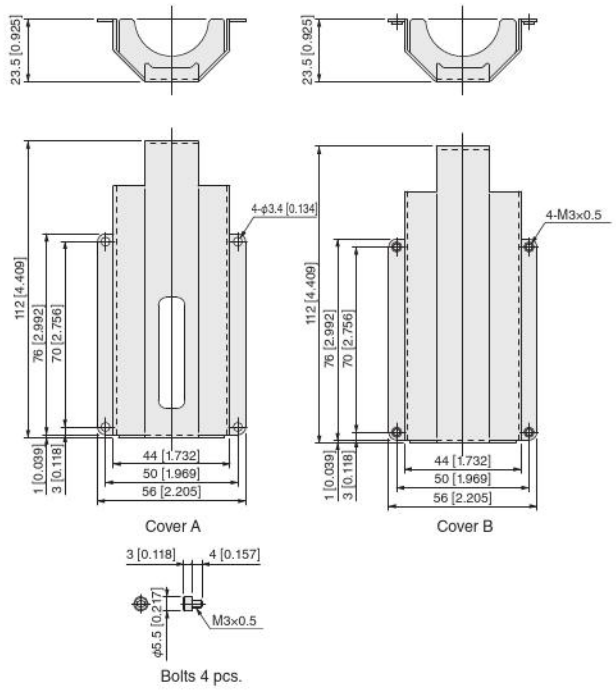

●IBCY50-□-□-BG

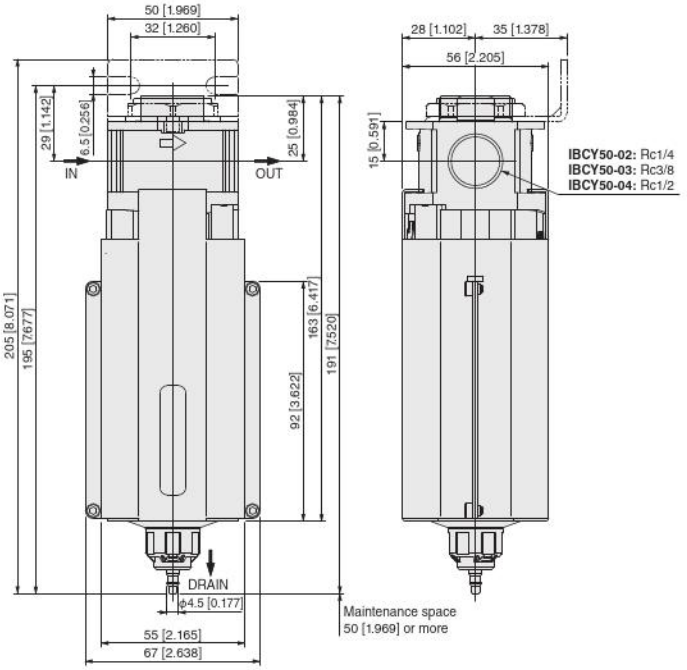

-BG: With metal cover

●BG-IBCY50

Metal cover

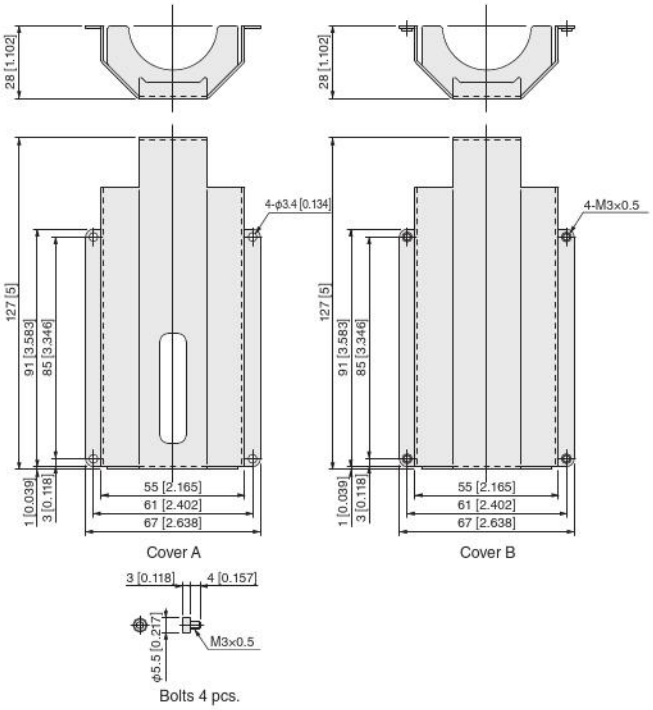

1. Before performing piping work, thoroughly flush the inside of the pipes (blow out with compressed air).
   Machining chips, sealing tape, rust and other debris remaining from the piping work may result in lowered performance and functionality or loss of functions.
2. This product cannot be used if the medium or ambient atmosphere includes any of the following substances:
   Organic solvents, phosphate ester type hydraulic oil, sulfur dioxide gas, chlorine gas, Freon gas, ozone, acids, or other corrosive gasses.
3. This product cannot be used in environments with the gases and fluids in described above, nor threadlocking adhesive, leak detection fluid, hot water or where it may be exposed to them. This product also cannot be used in direct ultra-violet light. See the reference materials on page 162 for details.
4. Cover the unit when using it in locations where it might be subject to excessive dust, dripping water, dripping oil, etc.
5. Do not allow moisture into the flow in excess of the amount in the product specifications. Water droplets may spread to the secondary side. See page 65 for details on the separation characteristics.
6. If condensation or frost forms in the product, the moisture (frost) may spread into the secondary side.

Medium and operating environment

1. Use cleaned air (using a filter of 40 µm or less) for the medium. Contact the nearest Koganei sales office or overseas department if you are considering using something other than cleaned air.
2. Do not use air that contains oil or solid matter.

NOTE Using air that contains oil or solids will cause the product's functions to stop after a short period and will reduce the product performance and service life.

Mounting and Piping

Do not install the product directly on a compressor. Use sufficient countermeasures for temperature control, and removing oils and solids before use.

NOTE Not using countermeasures may cause the product's functions to stop after a short period and may reduce the product performance and service life.

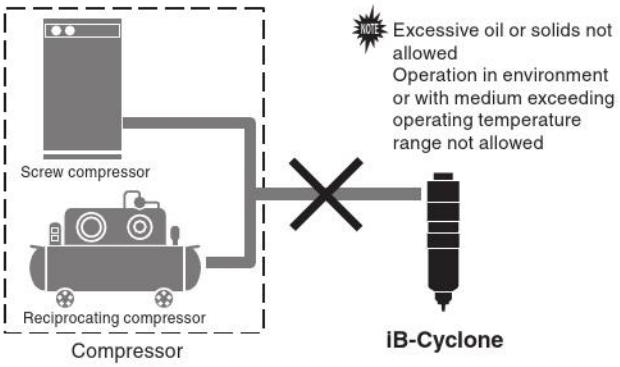

CAUTION The iB-Cyclone cannot be used for dehumidification.

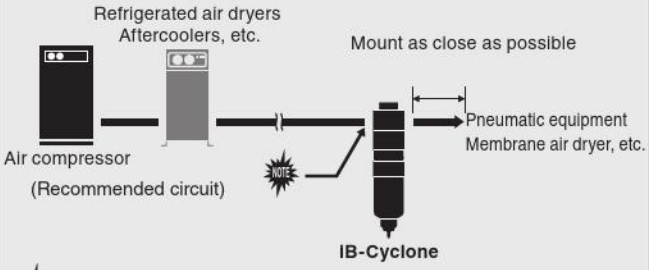

NOTE
1. The iB-Cyclone is a product for removing moisture. It cannot remove (dehumidify) the water vapor contained in compressed air. Use a film air dryer or something on the secondary side if dehumidifying is needed.
2. Use a device, such as a freeze-type air dryer or aftercooler, to lower the temperature of the incoming air to below the ambient temperature so condensation does not occur in the pipes on the secondary side of the iB-Cyclone. Also, install it as close as possible to the pneumatic equipment that will be used.

1. Install the product in a location where the supplied air and ambient temperature are 60°C [140°F] or less.
2. Install the product vertically, with the piping connection on the top and the drain outlet on the bottom.
3. Leave enough space for various maintenance work, such as for the guard button to rotate and for removing the bowl.
4. When attaching the bracket, tighten the mounting ring to 5.0 N·m [3.688 ft·lbf] or less.
5. Install the piping so that the air flows in the direction of the arrow (flow mark) indicated on the product. If the air flows in the opposite direction, the moisture removal function cannot operate.

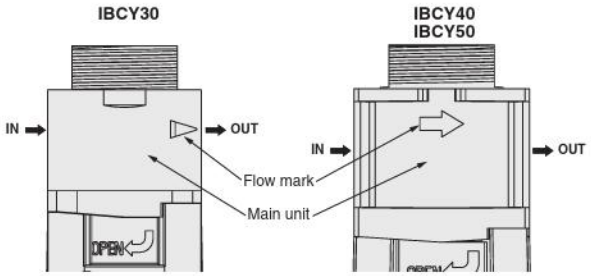

6. Do not apply piping load or excessive torque to the product. When tightening the piping, grip the main unit and tighten it to the torque recommended in the table below.

Recommended tightening torque N·m [ft·lbf]

Connecting thread	1/8	1/4	3/8	1/2
Torque	4.5 to 6.5 [3.319 to 4.794]	7 to 9 [5.163 to 6.638]	12.5 to 14.5 [9.220 to 10.695]	20 to 22 [14.752 to 16.227]

7. Piping that is not flexible, such as steel pipe, is easily affected by large moment loads and vibration transmitted from the piping side, so use flexible tubes or the like to prevent these effects.

● Periodic maintenance

Bowl

1. Do periodic inspections to look for cracks, scratches, or other deterioration in the bowl (clear plastic part).
2. If you notice any cracks, scratches, or other deterioration, which may cause a breakdown, replace the bowl with a new one. Refer to page 64 for information about order codes for bowls.
3. Replace the bowl with a new one if it becomes dirty or the transparency is reduced. To wash it, use diluted household cleaner to wash it and then rinse it off with water.
4. To remove or attach the bowl, follow the instructions in the diagram below (be sure to release the pressure inside the product before doing so).
5. Squeeze the guard button to attach or remove the bowl.

NOTE If there is a bowl guard, it may fall off when you squeeze it.

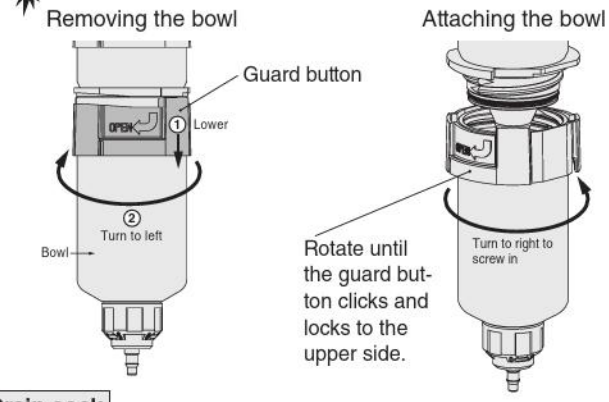

Drain cock

1. If the volume of water is greater than that shown in the left side diagram below, the moisture removal function will be greatly reduced. Be sure to drain the water before it increases beyond the level shown on the left side diagram below. Operate the drain cock with your hand.
2. A tube with an inner diameter of $\phi 4$ [0.157] can be attached to the fitting of the drain cock. Make sure the drain cock is closed (locked) before doing the connections. Do not allow tubing to become severely bent or twisted near the connection to a fitting. There is a risk of lateral force damaging the fittings. Also, avoid vertical piping, and keep the piping length to 5 m [16.400 ft] or less.
3. If you are using an auto drain, be careful that it does not exceed the upper limit level shown on the right in the figure below, as water accumulated in the primary side will flow in all at once and cause malfunctions if the upper limit level is exceeded.

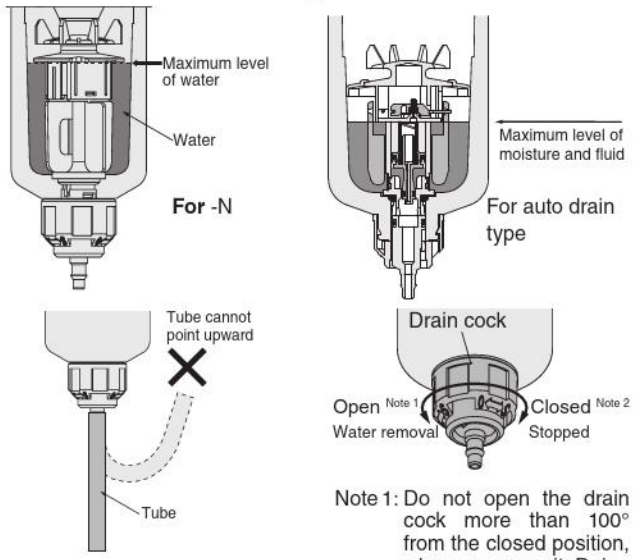

Note: The cut end of the tubing to be connected to the fitting must be at a right angle and must be inserted completely as shown in the diagram. Also, after installing it, lightly pull on it to check that it does not come off.

Note 1: Do not open the drain cock more than 100° from the closed position, when you open it. Doing so can damage the drain cock.
2: When closing the drain cock, turn it firmly until it locks with a click.

Whirling air components

1. If the whirling air components become clogged with dirt, the separation function will be impaired. If this happens, disassemble the product as shown in the diagram below, then wash it to remove the dirt (be sure to release the pressure inside the product before doing so).
2. When reassembling the whirling air components, prepare a "Seal kit" and use new O-rings. Refer to page 64 for information about order codes for seal kits.

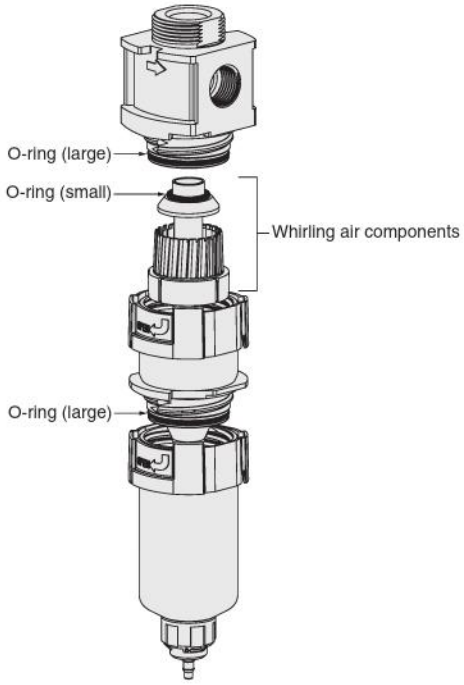

Assembly method

Reassemble according to the following procedure.

① Insert the fins into the conical tube and press them in with your hand.
② Attach a new O-ring (small) to the pass tube.
③ Fit the pass tube to the fins (fit it so it touches the seating of the fins).
④ Replace the two O-rings (large) and connect the conical tube to the main unit.

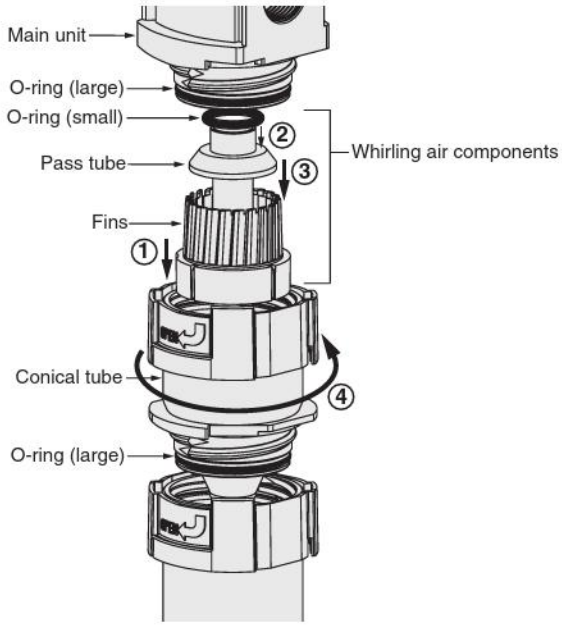

Removing and mounting the bowl guard

1. Be sure to release any pressure in the system before attaching or removing the bowl guard.
2. Use the procedure shown in the diagram below to attach (or remove) the bowl guard.

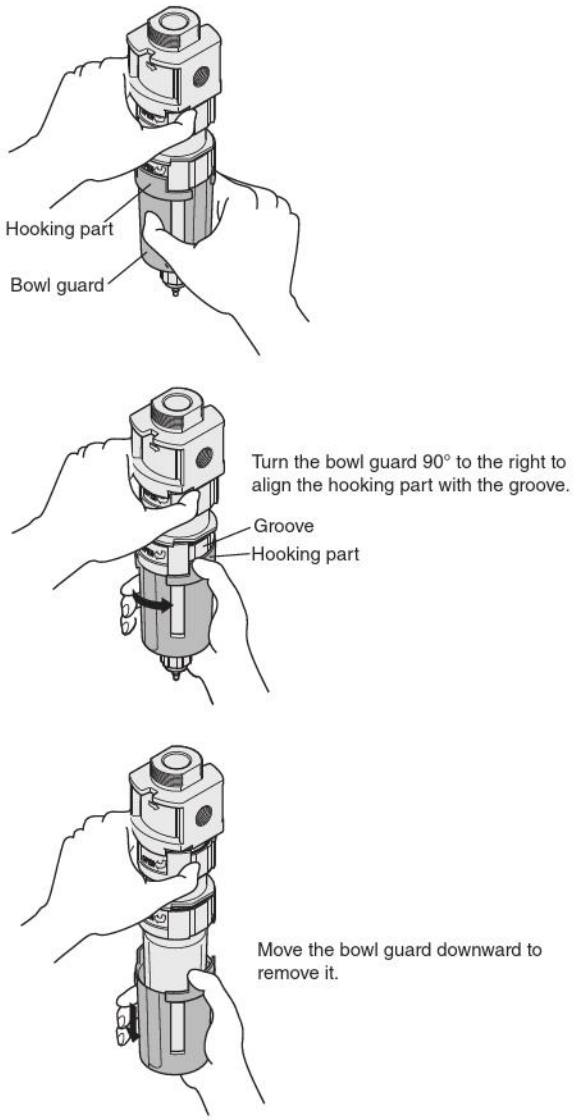

3. Use the reverse of the procedure shown in the diagram above to attach the bowl guard.

Mounting and removing the metal cover

Mount the metal cover according to the following procedure.

① Enclose the body of the iB-Cyclone between cover A and cover B as shown by the black arrows in the diagram below (window can be positioned 180° opposite).

② Tighten the hexagon socket bolts from the A cover side to 1.0 to 1.2 N·m [8.851 to 10.621 in·lbf].

To remove the metal cover, remove the hexagon socket bolts.

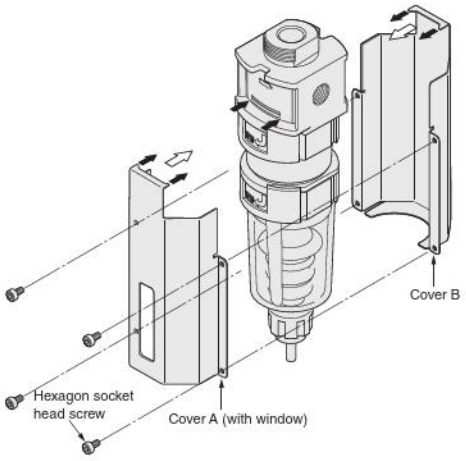

● Explanation of operation of auto drain system

State \ Type	NO type	NC type
Not pressurized	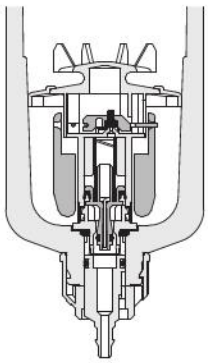 Open When unpressurized, the water outlet opens and the water drains naturally.	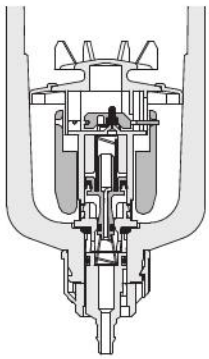 Close When unpressurized, the water outlet closes and the water cannot drain. Note: Water does not drain when unpressurized, if there is a lot of water even in an unpressurized (low pressure) condition, it may be necessary to drain the water by hand.
Pressurized	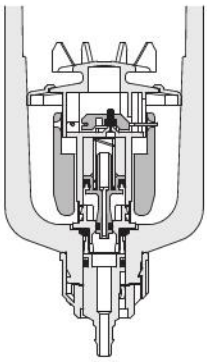 Close Air and water are periodically discharged from the water outlet until the minimum operating pressure (0.15 MPa [22 psi]) or higher is reached. The air and water will stop after the minimum operating pressure or more is reached. Note: A compressor with a small output may not reach full pressure, and there may be air output until the minimum operating pressure or higher is reached.	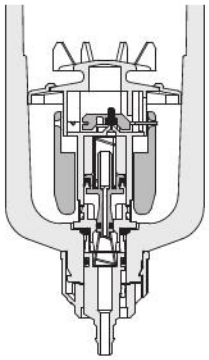 Close In the same way, when unpressurized, the water outlet closes and the water cannot drain.
Draining water	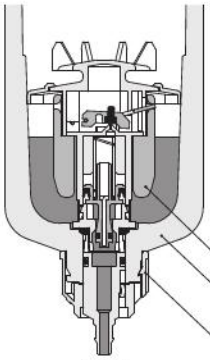 Open Float Bowl Drain knob When the level of water in the bowl reaches a specified level, the float lifts and the water automatically drains. Note: Water can be drained manually by turning the drain knob to the left. See page 70 for details.	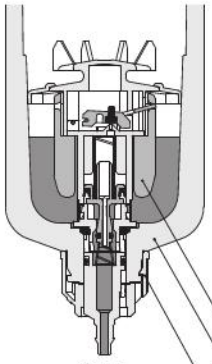 Open Float Bowl Drain knob When the level of water in the bowl reaches a specified level, the float lifts and the water automatically drains. Note 1: Supply pressure is needed to operate the auto drain. Ensure that the supply pressure is 0.15 MPa [22 psi] or more. 2: Water can be drained manually by turning the drain knob to the left. See page 70 for details.
Draining water completed	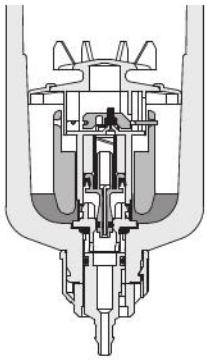 Close When the water drains, the float lowers and the water outlet closes, and water stops draining.	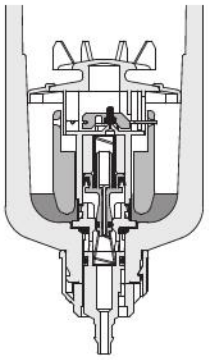 Close When the water drains, the float lowers and the water outlet closes, and water stops draining.

iB Series

Introducing the cyclone type water separator for NEGATIVE pressure!

iB-Cyclone PAT.

iB Cyclone

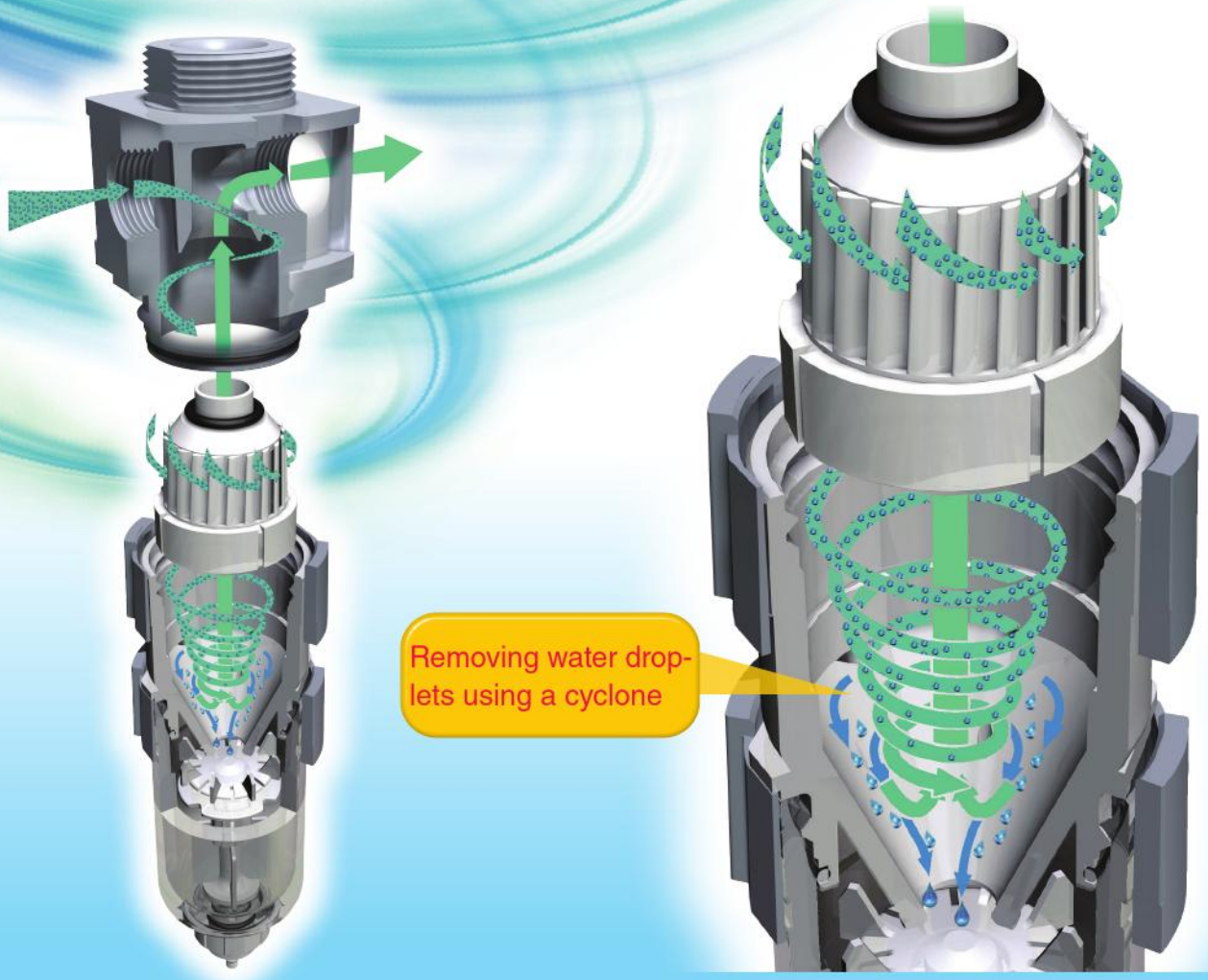

Superior water separation performance	Water separation rate over 90%[Note].
	Note: According to Koganei measurement standards.
Cyclone system	Expertise in centrifugal separation optimizes our **high-speed cyclone system** water separator (patent pending).
Maintainability improved	Maintenance-free because no element is used.
Wide range of vacuum flow rates	Water separation performance demonstrated over a wide flow rate.
Compatible in a wide range of environments	Specifications for ozone resistance, NCU specifications (copper free) compatible as standard.

User Issues

● When using a vacuum pump, users are worried that the moisture sucked in while suctioning workpieces can damage the pump

Koganei solves user problems with **iB-Cyclone**, which delivers new value.

iB-Cyclone uses a cyclonic system to maintain water separation rates even if flow is increased. Separation performance is always steady from low to high flow rates.

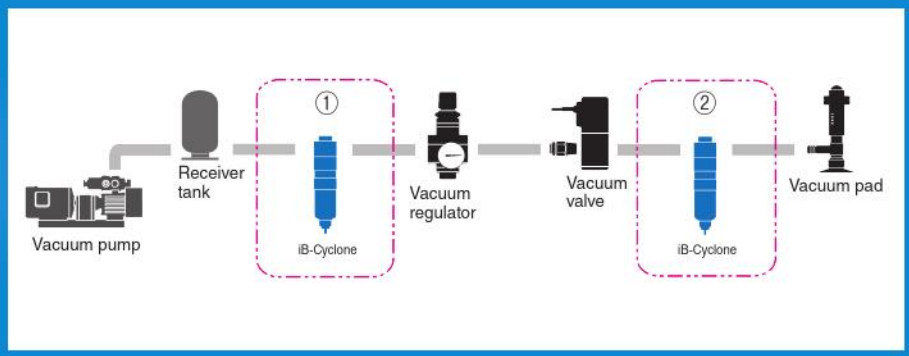

iB-Cyclone application example

- Installed directly after equipment to immediately stop suction of cleaning solutions and other droplets.
- Installed before the pump to immediately remove droplets that have accumulated inside the circuit.

Reduce frequency of maintenance and breakdowns of pump

Variations and Options

Drain cock with fitting

With bowl guard

With metal cover
IBCY40-□-□-□-BG
IBCY50-□-□-□-BG

Note 1: Metal cover cannot be attached to the **IBCY30**.
Note 2: When **iB-Cyclone** are connected in series in modules, the metal cover can only be attached to one side.

Bracket
8Z-CBK

iB-Cyclone

IBCY30·IBCY40·IBCY50

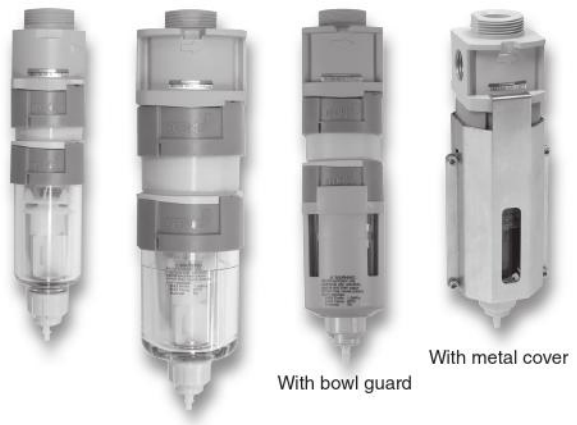

Symbols

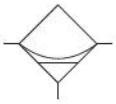

Specifications (negative pressure)

Item / Model		IBCY30		IBCY40			IBCY50		
Media		Air							
Port size	Rc	1/8	1/4	1/8	1/4	3/8	1/4	3/8	1/2
Operating pressure range	kPa [inHg]	–100 to 0 [–29.540 to 0]							
Vacuum break pressure	MPa [psi]	0.7 [102] or less[Note5]							
Proof pressure	MPa [psi]	1.5 [218]							
Operating temperature range (atmospheric and medium)	°C [°F]	0 to 60 [32 to 140]							
Water separation rate [Note1]	%	90 or more							
Water collection volume (for **-N**)	mℓ [in³]	13 [0.793]		16 [0.976]			27 [1.648]		
Recommended vacuum flow rate	ℓ/min(ANR) [ft³/min(SCFM)]	50 [1.766]	100 [3.532]	100 [3.532]	150 [5.298]	200 [7.064]	200 [7.064]	300 [10.596]	400 [14.128]
Materials used in major parts	Main unit	Die cast aluminum alloy							
	Bowl	PC (polycarbonate)/PCT (Polycyclohexylene-dimethylene terephthalate)[Note 2]							
	Bracket	Steel plate (electroless nickel plated)							
Weight (for standard product, maximum port size)	kg [lb]	0.15 [0.331] (0.16 [0.353])[Note 3]		0.20 [0.441] (0.21 [0.463]) <0.33 [0.728]>[Note3]			0.30 [0.662] (0.31 [0.684]) <0.48 [1.058]>[Note3]		
Option[Note 4]		Bowl guard (resin, pre-assembled), bracket (included parts)							

Note 1: Under Koganei measurement conditions.
2: Use a PCT resin bowl when using products in a location with a poor atmosphere (places with a risk of exposure to cutting oil, machine oil, etc.).
3: Weights in ( ) parentheses are the weights with a bowl and weights in < > angle brackets are the weights with a metal cover.
4: See the order code column for details about each option.
5: The application of vacuum-breaking air should be instantaneous pressurization.
6: To use the product under positive pressure, see page 63.

Order Codes (Negative Pressure)

IBCY □ – □ – □ – □ – □ – □

Bracket
Blank —— No bracket
B —— With bracket

Bowl guard specifications
Blank —— No bowl guard
PG —— With bowl guard (resin)
BG —— With metal cover (**IBCY40·50** only)[Note]
Note: The **IBCY30** does not come with a metal cover.
Also, when iB-Cyclones are connected in series in modules, the metal cover can only be attached to one side.

Drain cock specifications
N —— Drain cock with fitting
Note: The auto drain cock cannot be selected for negative pressure specifications.

Bowl specifications
Blank —— Standard specifications (polycarbonate)
P —— PCT resin bowl[Note]
Note: Use a PCT resin bowl when using products in a location with a poor atmosphere (places with a risk of exposure to cutting oil, machine oil, etc.).

Main unit Model	Port size Rc1/8	Rc1/4	Rc3/8	Rc1/2
30	01	02		
40	01	02	03	
50		02	03	04

iB-Cyclone

Flow rate characteristics

IBCY30

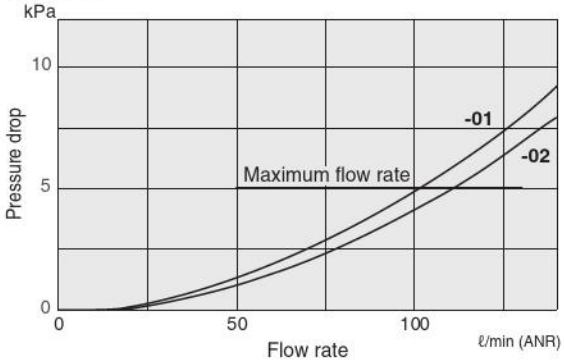

IBCY40

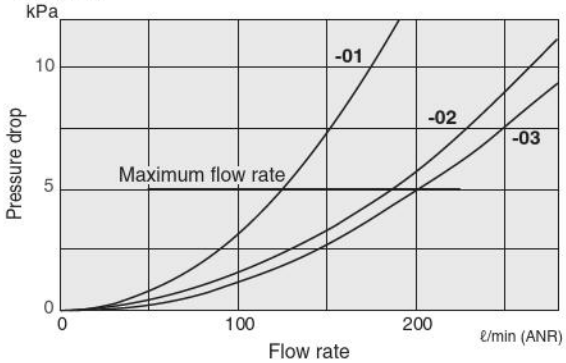

IBCY50

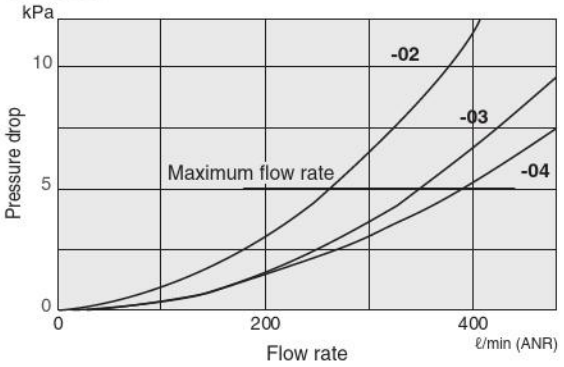

Water supply conditions for tests at Koganei

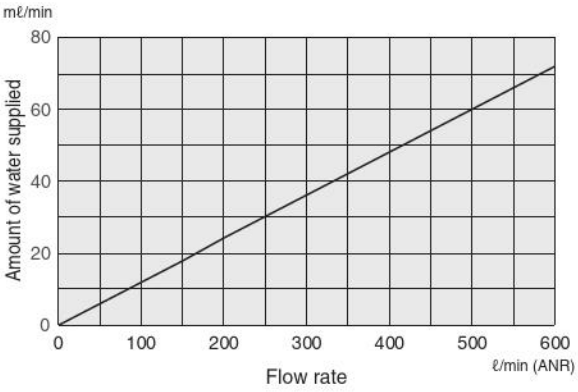

General precautions

1. Before performing piping work, thoroughly flush the inside of the pipes (blow out with compressed air).
   Machining chips, sealing tape, rust and other debris remaining from the piping work may result in lowered performance and functionality or loss of functions.
2. This product cannot be used if the medium or ambient atmosphere includes any of the following substances:
   Organic solvents, phosphate ester type hydraulic oil, sulfur dioxide gas, chlorine gas, Freon gas, ozone, acids, or other corrosive gasses.
3. This product cannot be used in environments with the gases and fluids in described above, nor threadlocking adhesive, leak detection fluid, hot water or where it may be exposed to them. This product also cannot be used in direct ultra-violet light. See the reference materials on page 162 for details.
4. Cover the unit when using it in locations where it might be subject to excessive dust, dripping water, dripping oil, etc.
5. Do not allow moisture into the flow in excess of the amount in the product specifications. Water droplets may spread to the secondary side. See page 76 for details about the water supply conditions for tests at Koganei.
6. If condensation or frost forms in the product, the moisture (frost) may spread into the secondary side.
7. Do not use this product for vacuum retention.
8. Drain the water periodically. If used at high vacuum pressure, the boiling point of the water accumulated in the bowl may drop, causing bubbles to form. There is also a risk that evaporated water may flow into the vacuum side.

Medium and operating environment

● Usable medium

1. Use cleaned air for the medium. Contact the nearest Koganei sales office or overseas department if you are considering using something other than cleaned air.
2. Do not use air that contains oil or solid matter.

NOTE Using air that contains oil or solids will cause the product's functions to stop after a short period and will reduce the product performance and service life.

● Dust

If explosive powders (aluminum powder, magnesium powder, coal powder, etc.), organic powders (epoxy resin, toner, paper powder, starch, etc.), or flammable organic solvents are mixed in with the dust, there is a risk of a dust explosion, so be especially careful.

● Static electricity

Be careful because static electricity may be generated if powders are mixed in with the cyclone flow.

Mounting and Piping

⚠ CAUTION The iB-Cyclone cannot be used for dehumidification.

NOTE The iB-Cyclone is a product for removing moisture. It cannot remove (dehumidify) the water vapor contained in air.

1. Install the product in a location where the ambient temperature is 60°C [140°F] or less.
2. Install the product vertically, with the piping connection on the top and the drain outlet on the bottom.
3. Leave enough space for various maintenance work, such as for the guard button to rotate and for removing the bowl.
4. When attaching the bracket, tighten the mounting ring to 5.0 N·m [3.688 ft·lbf] or less.
5. Install the piping so that the air flows in the direction of the arrow (flow mark) indicated on the product. If the air flows in the opposite direction, the moisture removal function cannot operate.

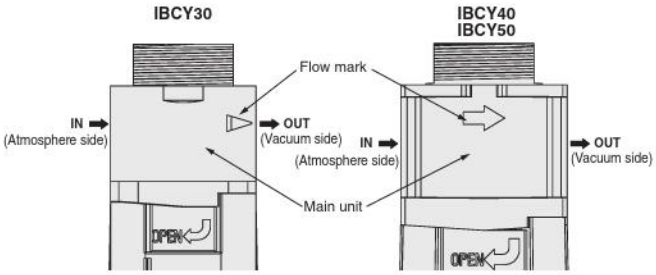

6. Do not apply piping load or excessive torque to the product. When tightening the piping, grip the main unit and tighten it to the torque recommended in the table below.

Recommended tightening torque N·m [ft·lbf]

Connecting thread	1/8	1/4	3/8	1/2
Torque	4.5 to 6.5 [3.319 to 4.794]	7 to 9 [5.163 to 6.638]	12.5 to 14.5 [9.220 to 10.695]	20 to 22 [14.752 to 16.227]

7. Piping that is not flexible, such as steel pipe, is easily affected by large moment loads and vibration transmitted from the piping side, so use flexible tubes or the like to prevent these effects.

FRZ Series
Air Filter, Oil Mist Filter, Micro Oil Mist Filter

Specialized **30 series**
for standalone applications

35 [1.378]

Air filter
FNZ30

Oil mist filter
MFZ30

Micro Oil Mist Filter
MMFZ30

The **40 and 50 series**
can be used in combination with others in the FRZ series

40 [1.575]

Air filter
FNZ40

50 [1.969]

Air filter
FNZ50

Oil mist filter
MFZ40

Micro Oil Mist Filter
MMFZ40

Oil mist filter
MFZ50

Micro Oil Mist Filter
MMFZ50

Down sizing	Improved flow rate characteristics allow a smaller configuration (close side-by-side spacing possible).
Visible filter element	It is easy to check the state of the filter element.
Short type bowl	Compact size. The amount of oil used in component parts is very small.
Compatible in a wide range of environments	Specifications for ozone resistance, NCU specifications (copper free) compatible as standard.
Air filter supports negative pressure	Air filter (FNZ) can be used in negative pressure. (except for Auto drain types)

Compact design

Improved flow rate characteristics allow a smaller configuration.

* Comparison of our mist filter **MF300** and oil mist filter **MFZ40**.

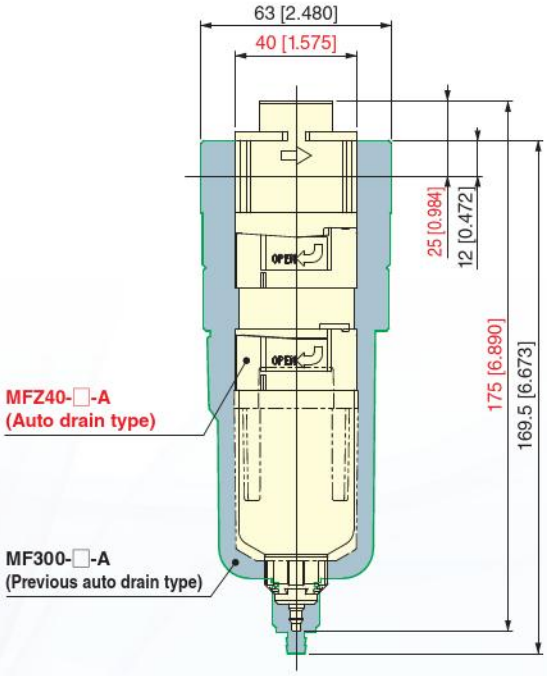

Drain cock specifications

Drain cock with fitting or auto drain types can be selected for the drain cock specifications.

Auto drain type
NO (Normally open)
NC (Normally closed)

Drain cock with fitting

Short type bowl

Compact short type also restricts the amount of oil products used and reduces the amount of splashing to the secondary side.

Note: It cannot be used with air that contains moisture or fluids because there is no function to remove moisture or fluids.

Improved visibility of the filter element

Changes in the flow passage structure and the clear holder make it easy to check how dirty the element is from when you start using it because dirt adheres to the outside of the element.

Elements can be checked while the bowl guard is attached.

Bowl guard (option)

Bowl guard option is available.

Note: Only the 40 and 50 series body sizes support metal covers.

Bracket

The brackets can be used with all sizes of all filter regulators. Also, brackets can be used with the iB-Cyclone and others in the FRZ series.

Air filter

FNZ30·FNZ31
FNZ40·FNZ41
FNZ50·FNZ51

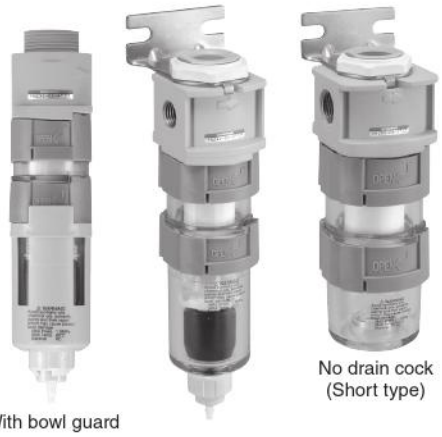

Symbols

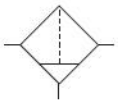

Specifications

Item		Model	FNZ30	FNZ31	FNZ40	FNZ41	FNZ50	FNZ51
Media			Air					
Port size			Rc1/8, Rc1/4		Rc1/8, Rc1/4, Rc3/8		Rc1/4, Rc3/8, Rc1/2	
Maximum operating pressure		MPa [psi]	1.0 [145](See the following to use it under negative pressure)					
Proof pressure		MPa [psi]	1.5 [218]					
Operating temperature range (atmospheric and medium)		°C [°F]	5 to 60 [41 to 140] (non-condensation)					
Filtration		μm	5	40	5	40	5	40
Fluid collection volume (for **-N**)		mℓ [in³]	13 [0.793]		16 [0.976]		27 [1.648]	
Major Parts and Materials	Main unit		Die cast aluminum alloy					
	Holder		PCT (Polycyclohexylene-dimethylene terephthalate)					
	Bowl		PC (polycarbonate)/PCT (Polycyclohexylene-dimethylene terephthalate)[Note 3]					
	Filter element		Nonwoven fabrics					
	Bracket		Steel plate (electroless nickel plated)					
Weight (for standard specifications and maximum port size)		kg [lb]	0.14 [0.309] (0.15 [0.331]) 〔0.12 [0.265]〕[Note 4]		0.20 [0.441] (0.21 [0.463]) <0.33 [0.728]> 〔0.17 [0.375]〕[Note 4]		0.30 [0.662] (0.31 [0.684]) <0.48 [1.058]> 〔0.28 [0.617]〕[Note 4]	
Options [Note 1, Note 2]			Auto drain (NO and NC), bowl guard (plastic and combined), bracket (part attachment)					

Note 1: If auto drain is selected as an option, ensure that the supply pressure is above 0.15 MPa [22 psi] (supply pressure is necessary for auto drain operations).
2: See page 90 or the order code column for details about each option.
3: Use a PCT resin bowl when using products in a location with a poor atmosphere (places with a risk of exposure to cutting oil, machine oil, etc.).
4: Weights in ( ) parentheses are the weights with a bowl and weights in < > angle brackets are the weights with a metal cover, and weights in 〔 〕 brackets are the weights for the short type.

●When used under negative pressure (standalone)

If the drain cock specifications are for a **-N** drain cock with fitting or a **-S** drain cock with fitting, then it can be used even under negative pressure. <Operating pressure range: **-0.1** to **1.0 MPa [-15 to 145 psi]**>.
Note: Auto drain types cannot be used under negative pressure.
The mounting direction should be IN side at positive pressure to the workpiece and pad side (**SET**) and OUT side at positive pressure to the pump side (**VAC**).

Order Codes

FNZ □ – □ – □ – □ – □ – □

Bracket
Blank —— No bracket
B —— With bracket

Bowl guard specifications
Blank —— No bowl guard
PG —— With bowl guard (resin)[Note]
BG —— With metal cover (only **FNZ4**□ and **FNZ5**□ can be selected)[Note]
Note: Not available for the **-S** models with no drain cocks (short type).
Also, when filters are connected in series in modules, the metal cover can only be attached to one side.

Main unit Model / **Port size**

Model	Rc1/8	Rc1/4	Rc3/8	Rc1/2	
30	01	02			Filtered particle size 5 μm
40	01	02	03		Filtered particle size 5 μm
50		02	03	04	Filtered particle size 5 μm
31	01	02			Filtered particle size 40 μm
41	01	02	03		Filtered particle size 40 μm
51		02	03	04	Filtered particle size 40 μm

Drain cock specifications
A —— Auto drain type drain cock NO type
C —— Auto drain type drain cock NC type
N —— Drain cock with fitting
S —— No drain cock (short type)

Air filter

Bowl specifications
Blank —— Standard specifications (polycarbonate)
P —— PCT resin bowl[Note]
Note: PCT resin bowl is **-S** drain cock specifications
Not available for <models with no drain cocks (short type)>.
Use a PCT resin bowl when using products in a location with a poor atmosphere (places with a risk of exposure to cutting oil, machine oil, etc.).

Inner construction

FNZ3□
FNZ4□
FNZ5□

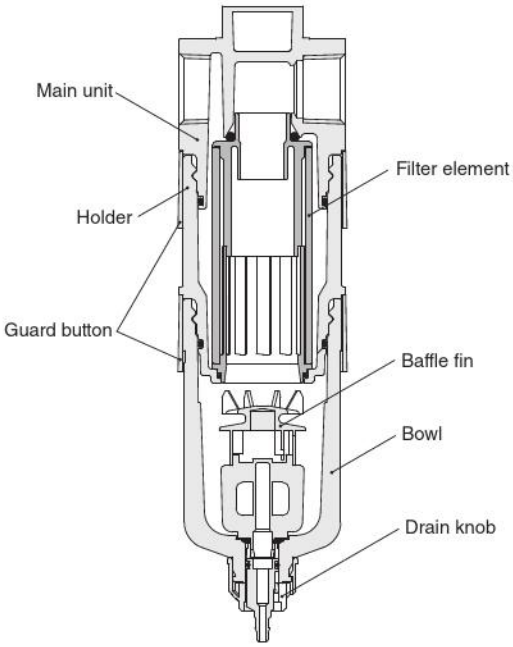

Flow rate characteristics

FNZ30-01,FNZ31-01

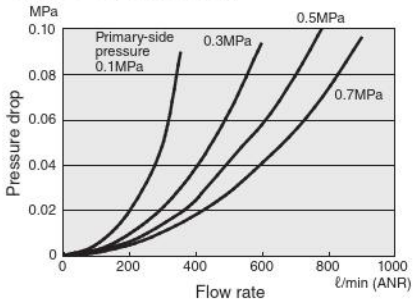

FNZ40-01,FNZ41-01

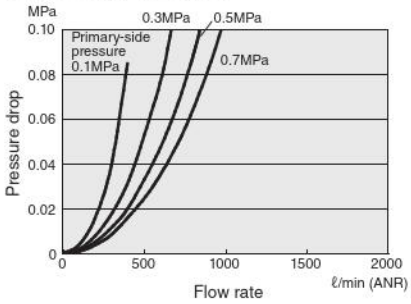

FNZ50-02,FNZ51-02

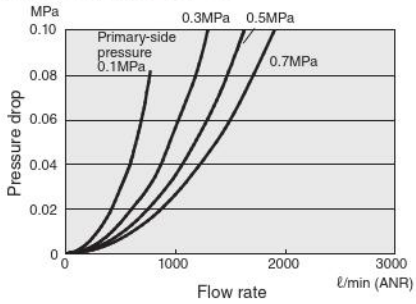

FNZ30-02,FNZ31-02

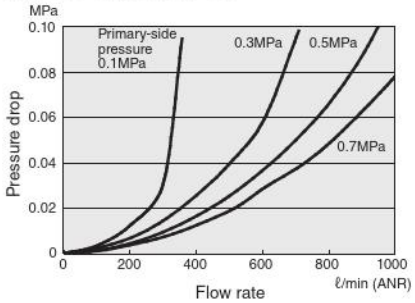

FNZ40-02,FNZ41-02

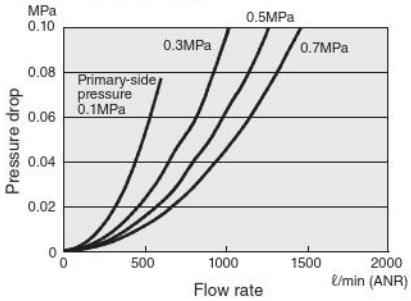

FNZ50-03,FNZ51-03

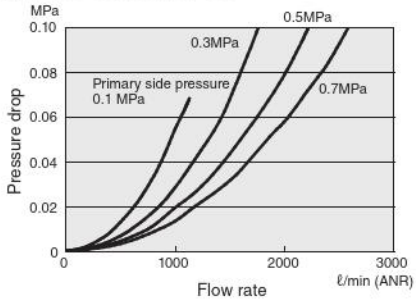

FNZ40-03,FNZ41-03

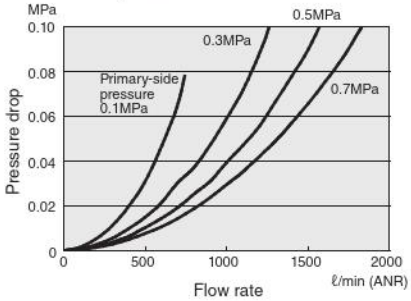

FNZ50-04,FNZ51-04

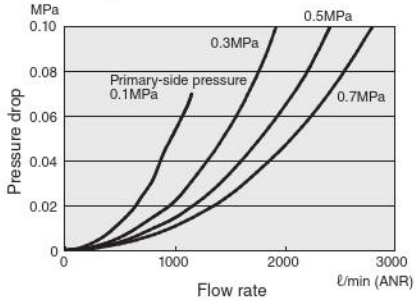

Oil mist filter

MFZ30
MFZ40
MFZ50

Symbols

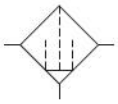

Specifications

Item		Model	MFZ30	MFZ40	MFZ50
Media			Air		
Port size			Rc1/8, Rc1/4	Rc1/8, Rc1/4, Rc3/8	Rc1/4, Rc3/8, Rc1/2
Maximum operating pressure		MPa [psi]	1.0 [145]		
Proof pressure		MPa [psi]	1.5 [218]		
Operating temperature range (atmospheric and medium)		°C [°F]	5 to 60 [41 to 140] (non-condensation)		
Filtration		μm	0.3		
Particle filtering efficiency		%	99.9		
Secondary oil mist concentration[Note 1]		mg/m³	1.0 or less		
Maximum flow rate[Note 2]		ℓ/min (ANR) [ft³/min (SCFM)]	100 [3.532]	300 [10.596]	750 [26.490]
Fluid collection volume (for **-N**)		mℓ [in³]	13 [0.793]	16 [0.976]	27 [1.648]
Major Parts and Materials	Main unit		Die cast aluminum alloy		
	Holder		PCT (Polycyclohexylene-dimethylene terephthalate)		
	Bowl		PC (polycarbonate)/PCT (Polycyclohexylene-dimethylene terephthalate)[Note 5]		
	Filter element		Porous membrane		
	Bracket		Steel plate (electroless nickel plated)		
Weight (for standard specifications and maximum port size)		kg [lb]	0.14 [0.309] (0.15 [0.331]) 〔0.12 [0.265]〕[Note 6]	0.20 [0.441] (0.21 [0.463]) <0.33 [0.728]> 〔0.17 [0.375]〕[Note 6]	0.30 [0.662] (0.31 [0.684]) <0.48 [1.058]> 〔0.28 [0.617]〕[Note 6]
Options [Note 3, Note 4]			Auto drain (NO and NC), bowl guard (plastic and combined), bracket (part attachment)		

Note 1: Value when the primary oil mist concentration is 30 mg/m³.
2: Maximum flow rate when the primary-side pressure is 0.7 MPa [102 psi].
3: If auto drain is selected as an option, ensure that the supply pressure is above 0.15 MPa [22 psi] (supply pressure is necessary for auto drain operations).
4: See page 90 or the order code column for details about each option.
5: Use a PCT resin bowl when using products in a location with a poor atmosphere (places with a risk of exposure to cutting oil, machine oil, etc.).
6: Weights in ( ) parentheses are the weights with a bowl and weights in < > angle brackets are the weights with a metal cover, and weights in 〔 〕 brackets are the weights for the short type.

Order Codes

MFZ □ – □ – □ – □ – □ – □

Bracket
Blank —— No bracket
B —— With bracket

Main unit Model / **Port size**

Model	Rc1/8	Rc1/4	Rc3/8	Rc1/2
30	**01**	**02**		
40	**01**	**02**	**03**	
50		**02**	**03**	**04**

Bowl guard specifications
Blank — No bowl guard
PG —— With bowl guard (resin)[Note]
BG —— With metal cover (only **MFZ40** and **MFZ50** can be selected)[Note]
Note: Not available for the **-S** models with no drain cocks (short type). Also, when filters are connected in series in modules, the metal cover can only be attached to one side.

Drain cock specifications
A — Auto drain type drain cock NO type
C — Auto drain type drain cock NC type
N — Drain cock with fitting
S — No drain cock (short type)

Oil mist filter

Bowl specifications
Blank —— Standard specifications (polycarbonate)
P —— PCT resin bowl[Note]
Note: PCT resin bowl is **-S** drain cock specifications
Not available for <models with no drain cocks (short type)>.
Use a PCT resin bowl when using products in a location with a poor atmosphere (places with a risk of exposure to cutting oil, machine oil, etc.).

Inner construction

MFZ30
MFZ40
MFZ50

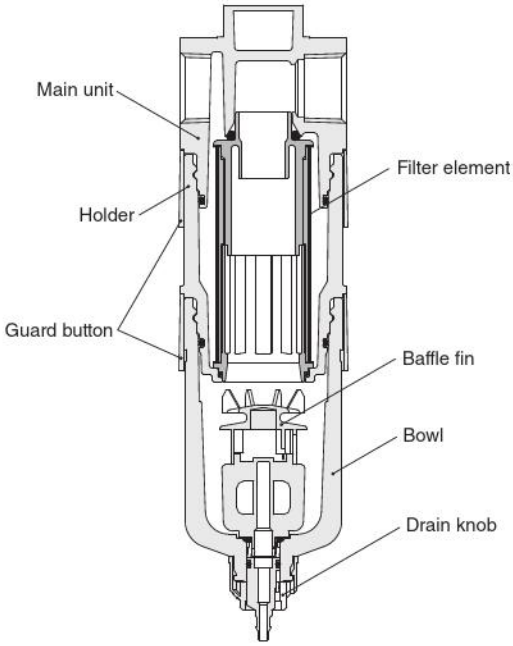

Flow rate characteristics

MFZ30-01

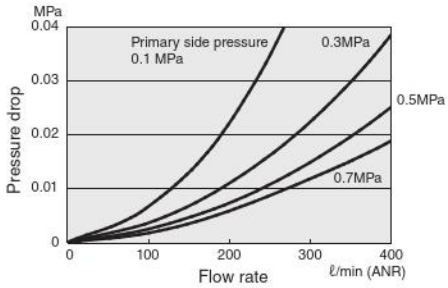

MFZ40-01

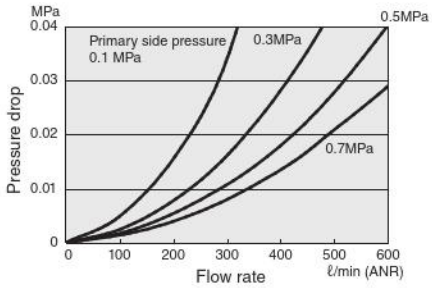

MFZ50-02

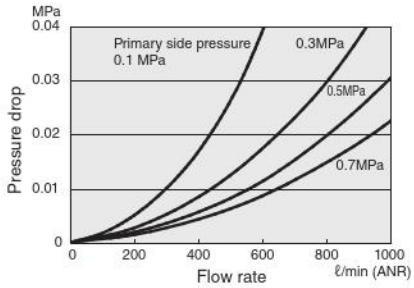

MFZ30-02

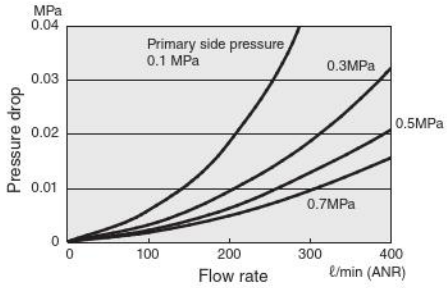

MFZ40-02

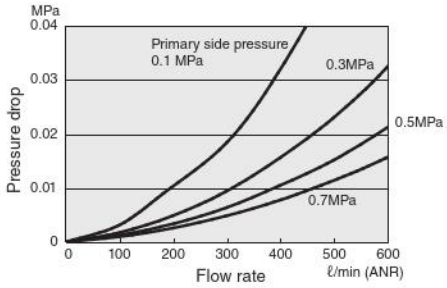

MFZ50-03

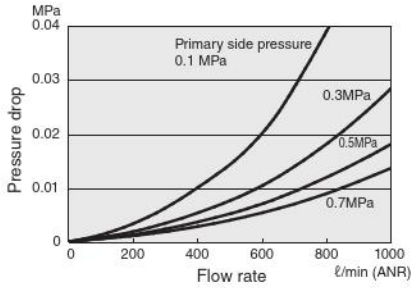

MFZ40-03

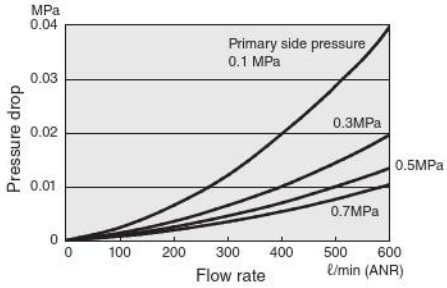

MFZ50-04

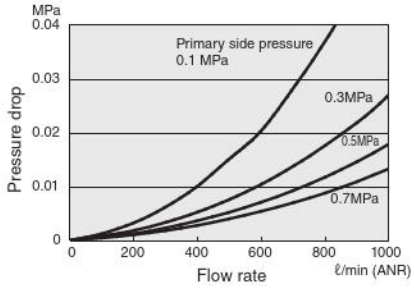

Micro Oil Mist Filter

MMFZ30
MMFZ40
MMFZ50

Symbols

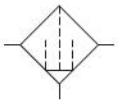

Specifications

Item / Model		MMFZ30	MMFZ40	MMFZ50
Media		Air		
Port size		Rc1/8, Rc1/4	Rc1/8, Rc1/4, Rc3/8	Rc1/4, Rc3/8, Rc1/2
Maximum operating pressure	MPa [psi]	1.0 [145]		
Proof pressure	MPa [psi]	1.5 [218]		
Operating temperature range (atmospheric and medium)	°C [°F]	5 to 60 [41 to 140] (non-condensation)		
Filtration	μm	0.01		
Particle filtering efficiency	%	99.9999		
Secondary oil mist concentration[Note 1]	mg/m³	0.01 or less		
Maximum flow rate[Note 2]	ℓ/min (ANR) [ft³/min (SCFM)]	100 [3.532]	150 [5.298]	400 [14.128]
Fluid collection volume (for **-N**)	mℓ [in³]	13 [0.793]	16 [0.976]	27 [1.648]
Major Parts and Materials	Main unit	Die cast aluminum alloy		
	Holder	PCT (Polycyclohexylene-dimethylene terephthalate)		
	Bowl	PC (polycarbonate)/PCT (Polycyclohexylene-dimethylene terephthalate)[Note 5]		
	Filter element	Porous membrane		
	Bracket	Steel plate (electroless nickel plated)		
Weight (for standard specifications and maximum port size)	kg [lb]	0.14 [0.309] (0.15 [0.331]) 〔0.12 [0.265]〕[Note 6]	0.20 [0.441] (0.21 [0.463]) <0.33 [0.728]> 〔0.17 [0.375]〕[Note 6]	0.30 [0.662] (0.31 [0.684]) <0.48 [1.058]> 〔0.28 [0.617]〕[Note 6]
Options [Note 3, Note 4]		Auto drain (NO and NC), bowl guard (plastic and combined), bracket (part attachment)		

Note 1: Value when the primary oil mist concentration is 30 mg/m³.
2: Maximum flow rate when the primary-side pressure is 0.7 MPa [102 psi].
3: If auto drain is selected as an option, ensure that the supply pressure is above 0.15 MPa [22 psi] (supply pressure is necessary for auto drain operations).
4: See page 90 or the order code column for details about each option.
5: Use a PCT resin bowl when using products in a location with a poor atmosphere (places with a risk of exposure to cutting oil, machine oil, etc.).
6: Weights in ( ) parentheses are the weights with a bowl and weights in < > angle brackets are the weights with a metal cover, and weights in 〔 〕 brackets are the weights for the short type.

Order Codes

MMFZ □ – □ – □ – □ – □ – □

Bracket
Blank —— No bracket
B —— With bracket

Bowl guard specifications
Blank —— No bowl guard
PG —— With bowl guard (resin)[Note]
BG —— With metal cover (only **MMFZ40** and **MMFZ50** can be selected)[Note]
Note: Not available for the **-S** models with no drain cocks (short type). Also, when filters are connected in series in modules, the metal cover can only be attached to one side.

Main unit Model / **Port size**

Model	Rc1/8	Rc1/4	Rc3/8	Rc1/2
30	01	02		
40	01	02	03	
50		02	03	04

Drain cock specifications
A — Auto drain type drain cock NO type
C — Auto drain type drain cock NC type
N — Drain cock with fitting
S — No drain cock (short type)

Micro Oil Mist Filter

Bowl specifications
Blank —— Standard specifications (polycarbonate)
P —— PCT resin bowl[Note]
Note: PCT resin bowl is **-S** drain cock specifications
Not available for <models with no drain cocks (short type)>.
Use a PCT resin bowl when using products in a location with a poor atmosphere (places with a risk of exposure to cutting oil, machine oil, etc.).

Inner construction

MMFZ30
MMFZ40
MMFZ50

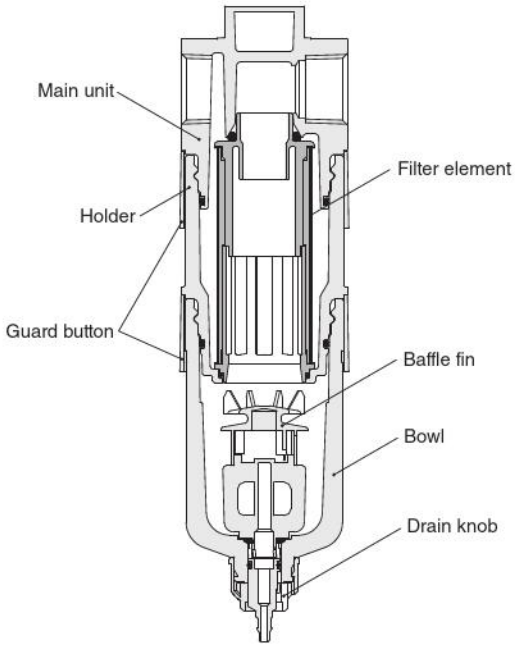

Flow rate characteristics

MMFZ30-01

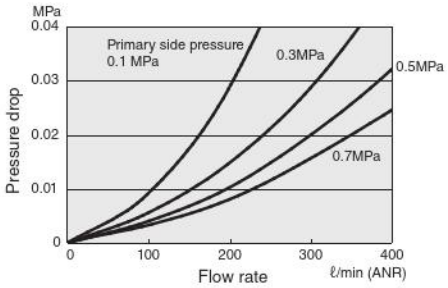

MMFZ40-01

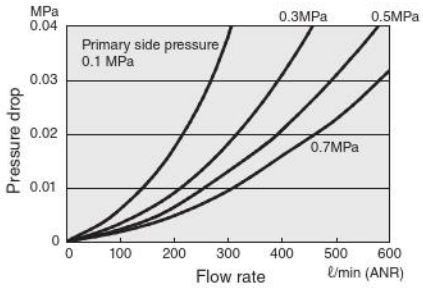

MMFZ50-02

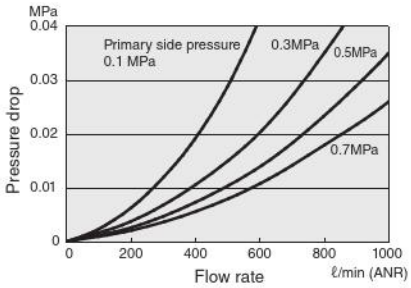

MMFZ30-02

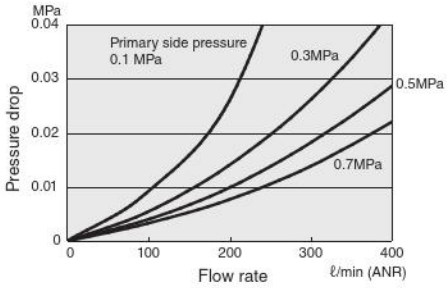

MMFZ40-02

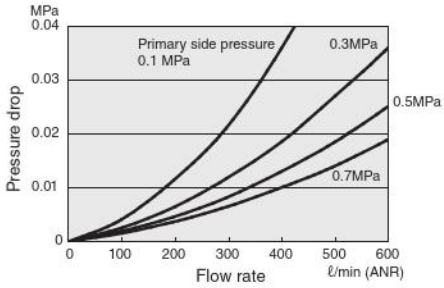

MMFZ50-03

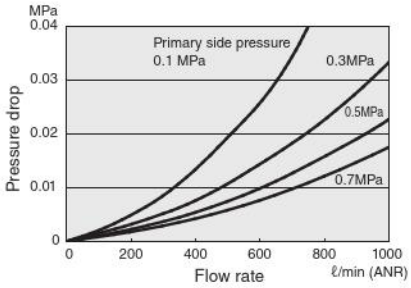

MMFZ40-03

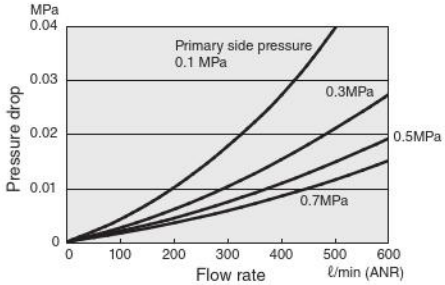

MMFZ50-04

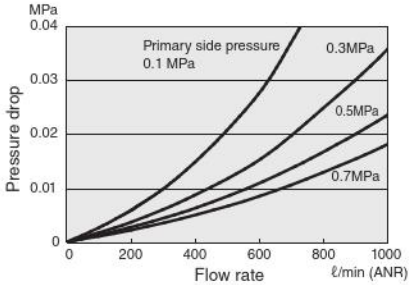

● **FNZ30**, **FNZ31**
● **MFZ30**
● **MMFZ30**

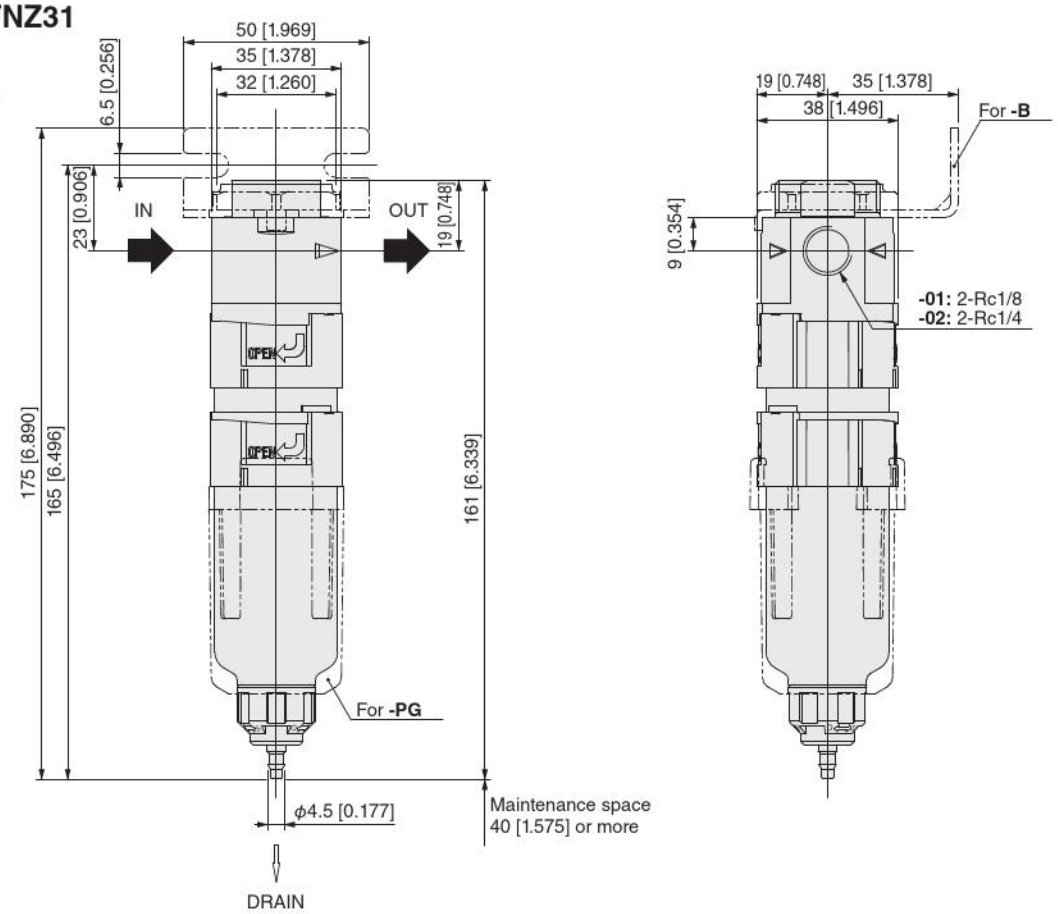

● **FNZ40**, **FNZ41**
● **MFZ40**
● **MMFZ40**

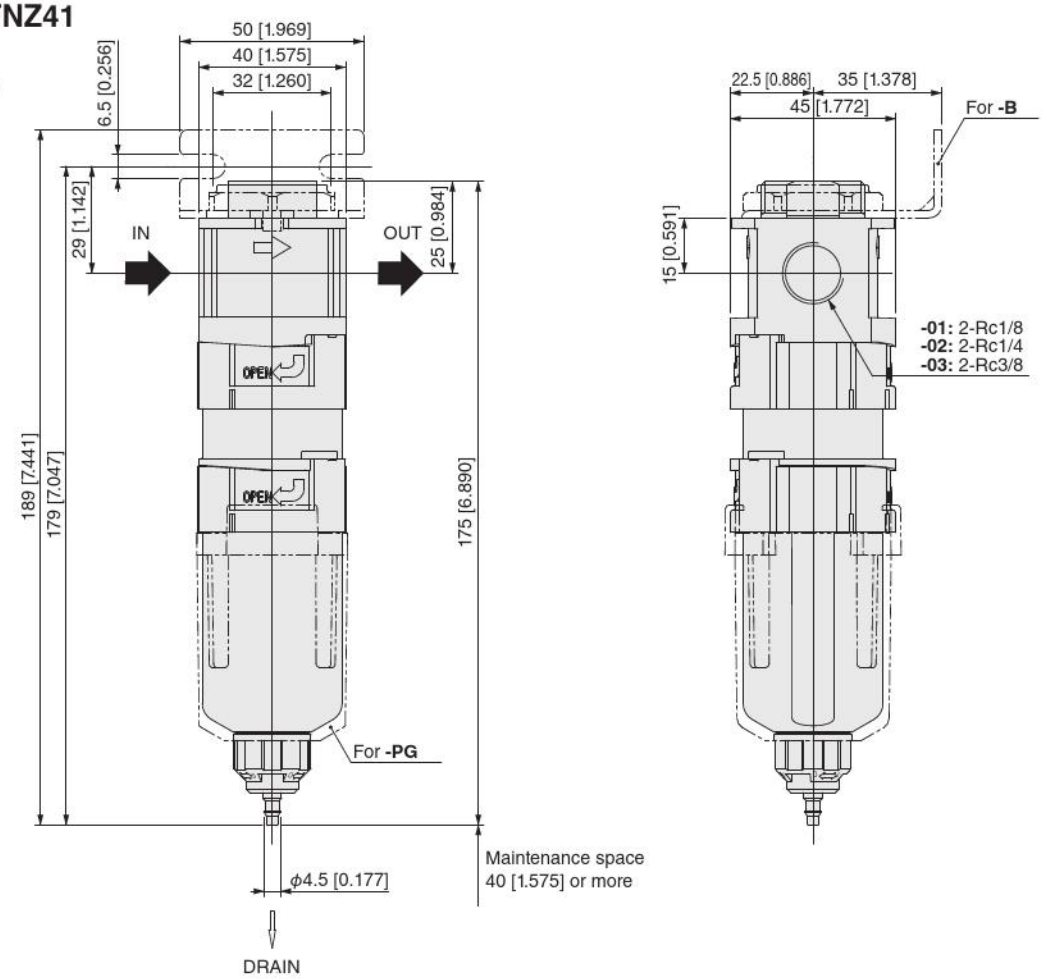

● **FNZ50, FNZ51**
● **MFZ50**
● **MMFZ50**

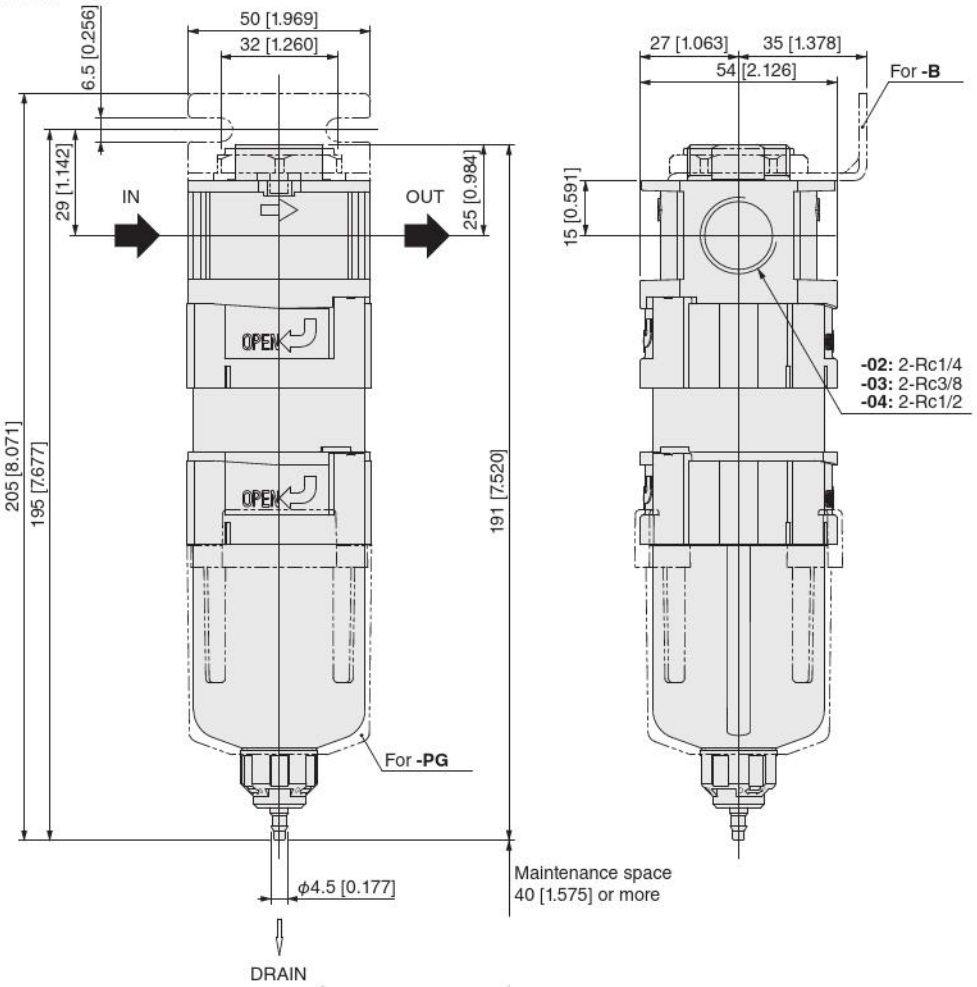

■ No drain cock (short type) for **-S**

● **FNZ30, FNZ31**
● **MFZ30**
● **MMFZ30**

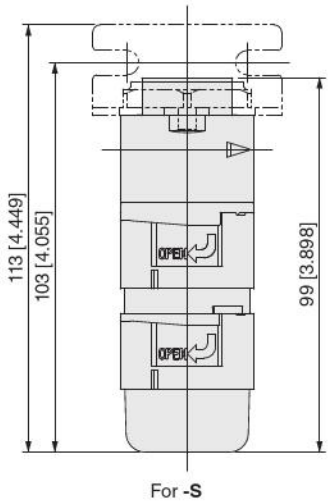

● **FNZ40, FNZ41**
● **MFZ40**
● **MMFZ40**

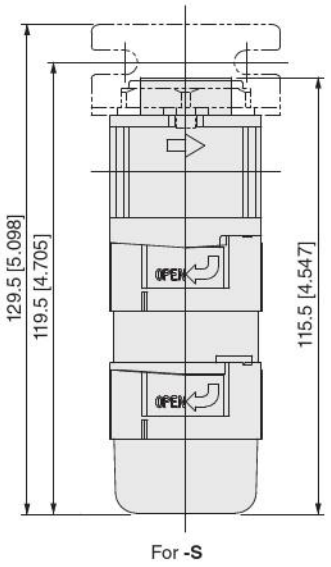

● **FNZ50, FNZ51**
● **MFZ50**
● **MMFZ50**

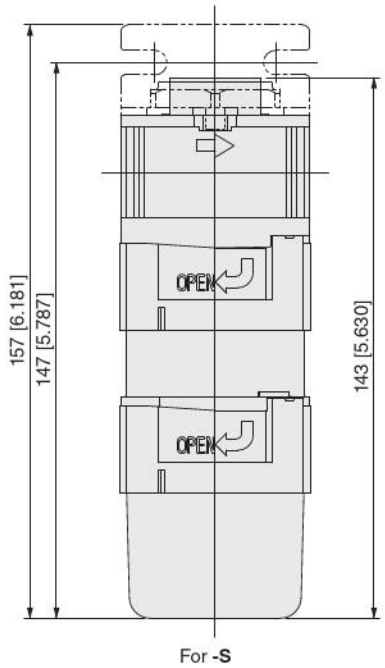

● FNZ4□-□-□-BG (with metal cover)
● MFZ40-□-□-BG (with metal cover)
● MMFZ40-□-□-BG (with metal cover)

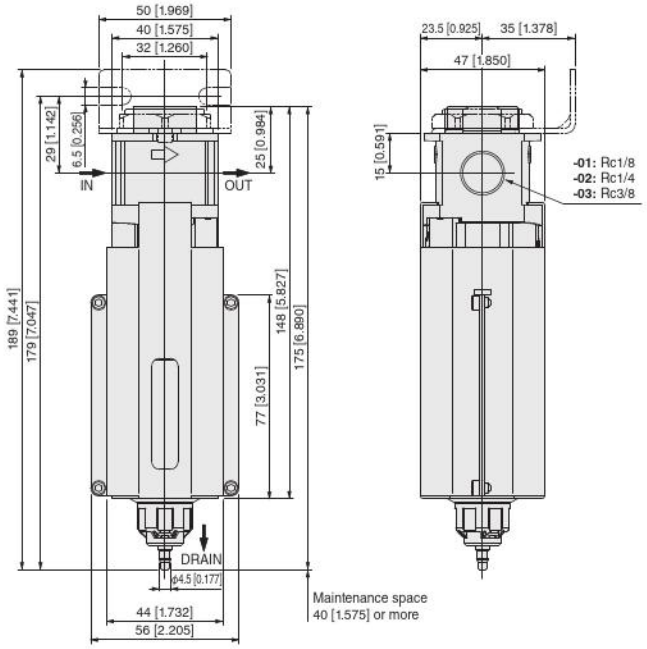

-BG: With metal cover

● BG-IBCY40

Metal cover

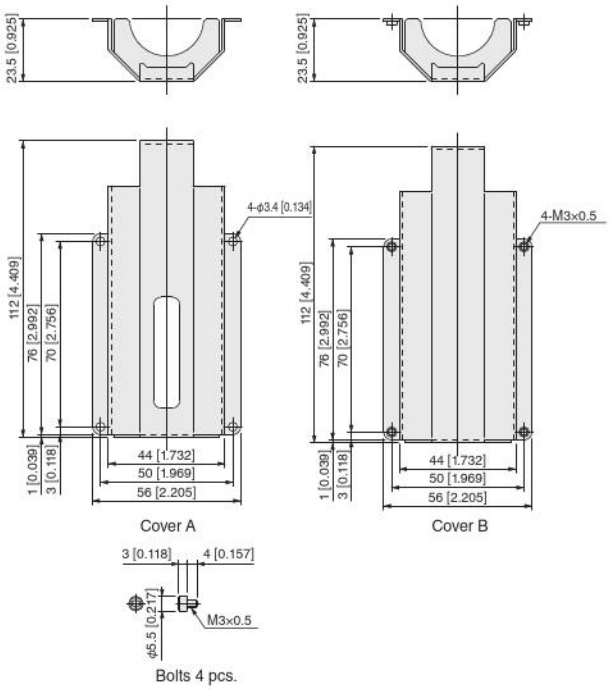

● FNZ5□-□-□-BG (with metal cover)
● MFZ50-□-□-BG (with metal cover)
● MMFZ50-□-□-BG (with metal cover)

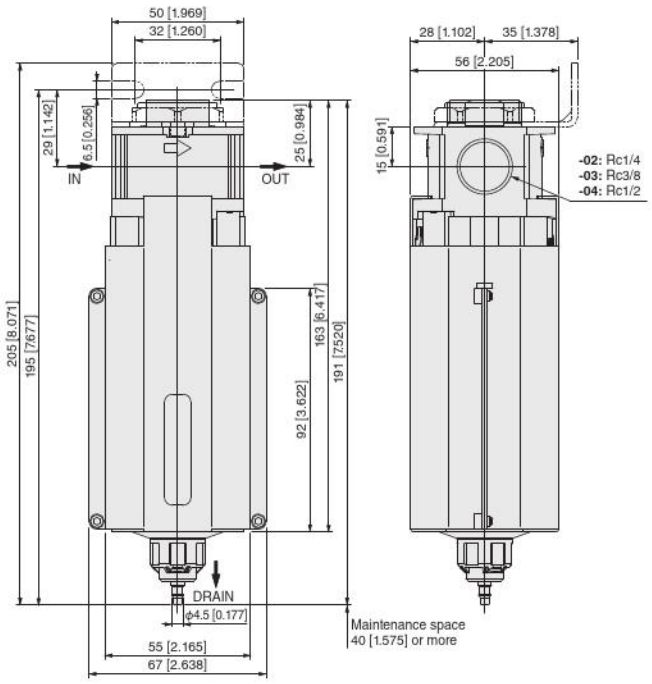

-BG: With metal cover

● BG-IBCY50

Metal cover

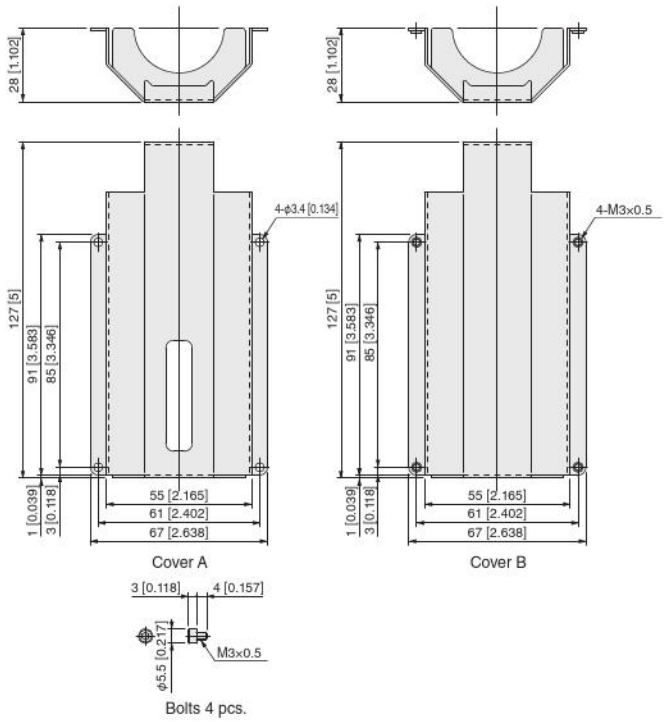

● Order codes for brackets only

8Z-CBK

* With mounting ring
Common to all body sizes

8Z-BK

* Common to all body sizes

● Mounting ring

R-FRZ

* Compatible bracket (for replacing Multi Series **F150·F300** air filter, **MF300** mist filter, and **MMF300·MMF400** micro mist filter)

* For details, refer to pages 151 to 153.

8Z-ABK□

Body size
30 —— **F150**→ replaced by **FNZ3□·MFZ30·MMFZ30**
40 —— **F300**, **MF300**, **MMF150**→ replaced by **FNZ4□·MFZ40·MMFZ40**
To replace the **F600**, **MF400**, **MF600**, **MMF300**, or **MMF400** you can use the **8-60B** as is.

● Maintenance parts

● Bowl assembly

BA-FRZB□-□-□-□

Bowl specifications
Blank —— Standard specifications (polycarbonate)
P —— PCT resin bowl

Body size
30 —— for **FNZ3□**, **MFZ30**, **MMFZ30**
40 —— for **FNZ4□**, **MFZ40**, **MMFZ40**
50 —— for **FNZ5□**, **MFZ50**, **MMFZ50**

Drain cock specifications
A —— NO type auto drain drain cock
C —— NC type auto drain drain cock
N —— Drain cock with fitting

Auto drain type
NO type
NC type

With fitting
Drain cock

Bowl guard specifications
Blank —— No bowl guard
PG —— With bowl guard

With bowl guard

● Bowl assembly (**-S** no drain cock (short type))

BA-FRZ□

30 —— for **FNZ3□-S**, **MFZ30-S**, **MMFZ30-S**
40 —— for **FNZ4□-S**, **MFZ40-S**, **MMFZ40-S**
50 —— for **FNZ5□-S**, **MFZ50-S**, **MMFZ50-S**

● Order Codes of Metal Covers Only

BG-IBCY□

Body size
40 —— for **FNZ4□**, **MFZ40**, **MMFZ40**
50 —— for **FNZ5□**, **MFZ50**, **MMFZ50**

Hexagon socket head screw
4 pcs.

● Element (for air filter)

E-□FNZ

30 —— for **FNZ30**
(filtered particle size 5 μm)
40 —— for **FNZ40**
(filtered particle size 5 μm)
50 —— for **FNZ50**
(filtered particle size 5 μm)
31 —— for **FNZ31**
(filtered particle size 40 μm)
41 —— for **FNZ41**
(filtered particle size 40 μm)
51 —— for **FNZ51**
(filtered particle size 40 μm)

The top and bottom plastic parts and the element part are separate structures.

Top plastic part
Ivory

Color of bottom plastic part
Ivory (filtered particle size 5 μm)
Grey (filtered particle size 40 μm)

● Element (for oil mist filter)

E-□MFZ

30 —— for **MFZ30**
40 —— for **MFZ40**
50 —— for **MFZ50**
* Filtered particle size 0.3 μm

The top and bottom plastic parts and the element part form one integrated structure.

Top plastic part
Ivory

Color of bottom plastic part
Ivory

● Element (for micro oil mist filter)

E-□MMFZ

Body size
30 —— for **MMFZ30**
40 —— for **MMFZ40**
50 —— for **MMFZ50**
* Filtered particle size 0.01 μm

The top and bottom plastic parts and the element part form one integrated structure.

Top plastic part
Ivory

Color of bottom plastic part
Grey

● Seal kit (various O-rings)

SRK-MFZ□

Body size
30 —— for **FNZ3□**, **MFZ30**, **MMFZ30**
40 —— for **FNZ4□**, **MFZ40**, **MMFZ40**
50 —— for **FNZ5□**, **MFZ50**, **MMFZ50**

Refer to "Replacing the seal kit, element, and bowl assembly" on page 96 regarding the component parts of the seal kits.

Design and selection

● Selection

See the Handling Instructions and Precautions, Specifications, Various Characteristics, Dimensions, and other technical materials for each product to make the correct decision.

Mounting (installation) and piping

● Mounting (installation) direction, support, and securing

1. The products cannot be mounted (installed) if a bending moment or twisting moment is applied to the product or piping.

NOTE Applying bending moment or twisting moment may damage the product.

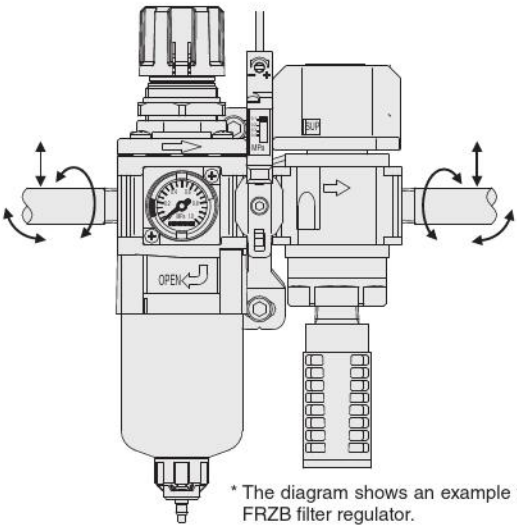

* The diagram shows an example for the FRZB filter regulator.

2. Do not attach piping so that just one side is fixed as shown in the following diagram. Support external piping separately.

NOTE The moment caused by the OUT (secondary) side pipes may damage the product's piping connections.

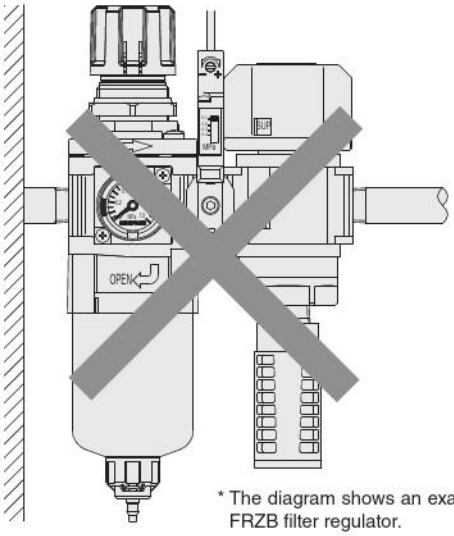

* The diagram shows an example for the FRZB filter regulator.

3. Use the brackets to install the products.
4. When mounting (installing) products, always make sure they are secured and sufficiently supported.

NOTE If a product is not securely fixed in place, it may fall over, be dropped, or operate abnormally and cause an injury.

● Maintenance space requirements

Assure there is sufficient space for maintenance inspections and maintenance work.

See the dimension diagram for each of the products regarding the maintenance space.

NOTE If there is not enough allowance for maintenance space, it is impossible to remove the bowl assembly and replace the filter. Also, it is impossible to do maintenance inspections so the equipment may stop or the product may be damaged.

● Attaching steel pipes and fittings

If steel pipes and fittings are attached to the threaded sections of the aluminum die-cast parts of the product, tighten them to the torque recommended in our standards.

NOTE Tightening with excess torque may damage the product or injure workers or operators.

Recommended tightening torque — N·m [ft·lbf]

Connecting thread	1/8	1/4	3/8	1/2
Torque	4.5 to 6.5 [3.319 to 4.794]	7 to 9 [5.163 to 6.638]	12.5 to 14.5 [9.220 to 10.695]	20 to 22 [14.752 to 16.227]

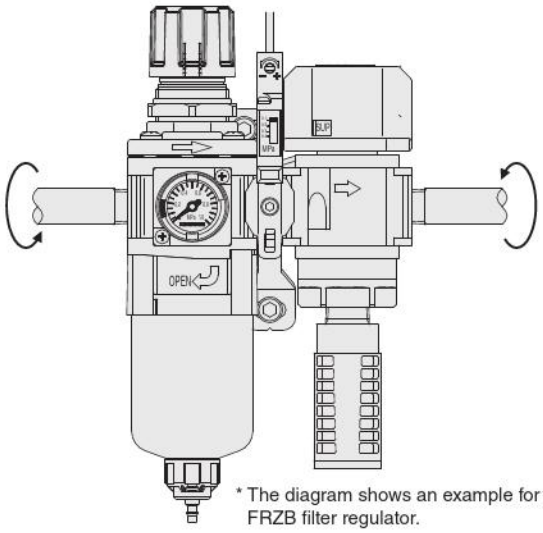

* The diagram shows an example for the FRZB filter regulator.

● Preventing contamination by foreign matter

1. Remove all foreign matter, such as metal chips, cutting oil, or dirt, from inside pipes with an air blower (flushing) and thorough washing before fitting the pipes.
2. Do not allow foreign matter, such as metal chips, or sealing tape from the piping threads, to get into the pipes when fitting the pipes.

NOTE Foreign matter entering the piping may damage the product or reduce its performance and service life.

3. Wrap the sealing tape in the direction as shown in the diagram below leaving 1.5 to 2 threads uncovered. When using liquid sealant, apply a suitable amount and in the same way leave 1.5 to 2 threads uncovered.

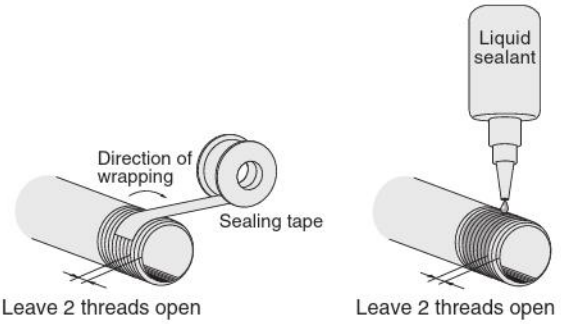

NOTE When fitting the pipes, if there is sealing tape or liquid sealant on the end cap of the steel pipes or fittings, the fragments may get into the pipes and cause an air leak.

4. If you are using liquid sealant, do not get it on the bowl of the filter.

NOTE If liquid sealant gets on the parts, it may damage them.

Medium and operating environment

● Usable medium

1. Use cleaned air for the medium. Contact the nearest Koganei sales office or overseas department if you are considering using something other than cleaned air.
   - For MFZ
     Install the FNZ air filter on the primary side to avoid premature clogging.
   - For MMFZ
     Install the MFZ oil mist filter on the primary side to avoid premature clogging.
2. For drain cock specifications (-A, -C, -N), avoid using air that contains too much moisture and fluid.

   NOTE Using air that contains too much moisture and fluids will cause the product's functions to stop after a short period and will reduce the product performance and service life.
3. For drain cock specification (-S), it cannot be used with air that contains moisture or fluids because there is no function to remove moisture or fluids.

   NOTE Using air that contains moisture and fluids will cause the product's functions to stop after a short period and will reduce the product performance and service life.
4. If air that contains moisture and fluids is used, or if it is possible that they may be mixed in with the air being used, we recommend using the iB-Cyclone to reliably remove moisture and fluids.
5. Do not use the product if the media being used is prone to extreme pulsating or surging.

   NOTE Medium prone to extreme pulsating or surges will cause the product's functions to stop after a short period and will reduce the product performance and service life.

● Operating environment

1. Do not use the product in locations that are subject to direct sunlight (ultraviolet rays); locations with high humidity and temperature, dust, salt, or iron powder.
2. Cover the unit when using it in locations where it might be subject to excessive dust, dripping water, dripping oil, etc.
3. Do not use the product in environments subject to external vibration or impact.

   NOTE External vibrations or shocks may result in damage to component parts.
4. Avoid piping that is rigid, such as steel piping, if vibrations are transmitted. Use flexible tubes so that the product is not subject to the vibrations.
1. The temperature of the medium and the ambient environment must be within the range in the specifications.

   NOTE Using the product in an environment that is outside the specified temperature or with media that is outside the specified temperature will cause the product's functions to stop after a short period and will reduce the product performance and service life.
2. Use a device, such as a freeze-type air dryer or after cooler, to lower the dew-point temperature of the medium to below the ambient temperature so condensation or frost does not occur in the secondary pipes.

   NOTE If condensation or frost forms in the product, it may get into the secondary side.
3. Do not use media in the product or use the product in an environment that includes corrosive components such as organic solvents, phosphate ester type hydraulic oil, sulfur dioxide, chlorine gas, Freon gas, ozone, acids, alkaline, or in atmospheres or locations where there is screw lock agents, leak detection fluids, or hot water, or direct exposure to ultraviolet rays. See the reference materials on page 162 for details.

   NOTE Using the product in an environment or with media that is specified in the above item 3 will cause the product's functions to stop after a short period and will reduce the product performance and service life.

Operation and maintenance inspections

● Method of use

Read the Handling Instructions and Precautions for each product for instructions on correct usage.

● Maintenance (maintenance inspection)

1. Performance and functions may decrease as the pneumatic equipment ages. Always conduct daily inspections of the pneumatic equipment, and confirm that all requisite system functions are satisfied, to prevent accidents from happening.
2. Read the Handling Instructions and Precautions for instructions on maintenance and replacing maintenance parts.
3. The product must be disassembled and reassembled to use the seal kit.

   NOTE The product is no longer under warranty if it is disassembled and reassembled.

Design and selection

● Installed directly on compressor

Do not install the product directly on a compressor. If you do, provide sufficient countermeasures for temperature control, and removing oils and solids.

NOTE Not using countermeasures may cause the product's functions to stop after a short period and may reduce the product performance and service life.

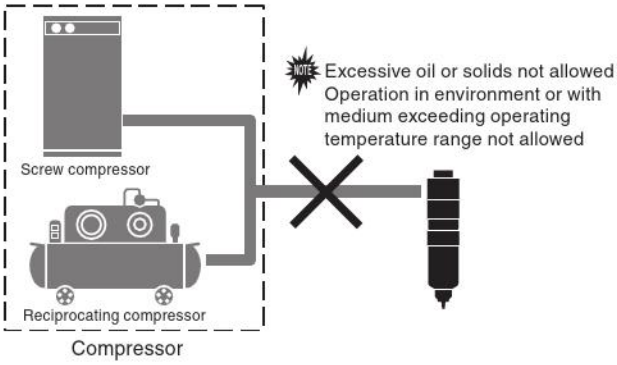

● Moisture and fluid removal functions

The FRZ series air filters and (micro) oil mist filters cannot reliably remove moisture and fluids.

NOTE Use an iB-Cyclone to effectively remove moisture and fluid.

● Removal

Air filters and (micro) oil mist filters cannot dehumidify.

NOTE Install a film air dryer or something on the secondary side if dehumidifying is needed.

Mounting (installation) and piping

● Mounting (installation) direction

Mount (install) the air filter or (micro) oil mist filter vertically so the drain outlet is down.

● Direction of flow

1. Connect the air filter or (micro) oil mist filter so that the medium flows in the IN port (primary) side and out the OUT port (secondary) side.
2. Use the flow marks on the products to identify the primary port and secondary port of the air filter or (micro) oil mist filter.

NOTE Reversing the IN port (primary) side and the OUT port (secondary) side connections damages the product and causes it to stop functioning.

● Flow mark

The following diagram shows the relationship of the direction of flow of the medium and the flow mark on the air filter and (micro) oil mist filter.

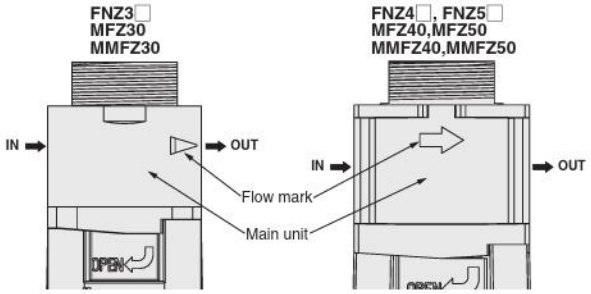

● Piping work

Connect steel pipes and fittings to the air filter or (micro) oil mist filter IN ports and OUT ports so that the weight and torque of the pipes do not affect the product. When tightening the piping, hold the main unit and tighten it to the torque recommended on page 91.

NOTE Applying unnecessary force or impact to the holder or bowl assembly may damage component parts.

● Installing brackets

To install brackets, do it in the following order.

1. Install the bracket.
2. Screw on the mounting ring.

NOTE Tighten the mounting ring to 5.0 N·m [3.688 ft·lbf] or less.

● Mounting ring

1. Tighten the mounting ring to 5.0 N·m [3.688 ft·lbf] or less.
2. If you use a tool to tighten the mounting ring, be sure to firmly grip the opposite edges of the mounting ring.

NOTE If the mounting ring is not firmly gripped or too much torque is applied to it, component parts may be damaged.

Operation and maintenance inspections

● Clear plastic parts (bowl assembly)

1. Do periodic inspections to look for cracks, scratches, or other deterioration in the clear plastic parts. If you detect any cracks, scratches, or other deterioration, immediately stop use.
2. If you find any cracks, scratches, or other deterioration in the bowl, replace the bowl assembly with a new one, because it may cause a breakdown.

NOTE Cracks, scratches, or other deterioration may cause the bowl to break.

7. Replace the bowl assembly with a new one if it becomes dirty or the transparency is reduced. To wash the bowl holder, use diluted household cleaner to wash it and then rinse it off with water. See the reference materials on page 162 for details about the chemical resistance of the bowl holder material.
8. When replacing the seal kit, element, and bowl assembly, be careful not to lose component parts.
9. See page 90 to replace the seal kit, element, and bowl assembly.

● Drain cock operation

1. Turn the drain cock with your hand.
2. Use the following procedure to operate the drain cock.
   1. Turn the drain cock in the direction of [O].
   2. After the moisture and fluid has drained out, turn the drain cock in the direction of [S] until it clicks and locks.
3. Do not turn the drain cock more than 100° from the closed position, when you open it.

NOTE Turning the drain cock more than 100° may damage it.

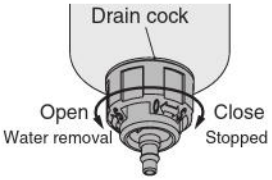

● Processing oil and fluid

1. If the regulator you are using has no auto drain (**-N**), be sure to drain the moisture and fluid before the water volume reaches the level shown in the left side diagram below.

NOTE If the volume of moisture and fluid is greater than that shown in the left side diagram below, the moisture and fluid removal function will be greatly reduced.

2. If the regulator you are using has an auto drain (**-A** or **-C**), the moisture and fluid that collects on the primary side is flushed all at once, do not let it exceed the maximum level as shown in the right-side diagram below.

NOTE The auto drain may malfunction if the volume of moisture and fluid exceeds the maximum level as shown in the right-side diagram below.

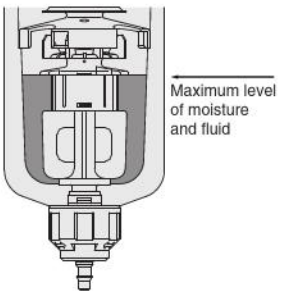

For **-N**

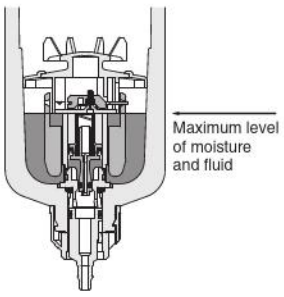

For **-A -C**

3. See the reference material on page 97 "Principles of auto drain operation" regarding the auto drain operation principles.
4. A tube with an inner diameter of ϕ4 mm [0.157 in.] can be attached to the barbed fitting of the drain cock. Make sure the drain cock is closed (locked) before attaching the tube.
5. Cut the end of the tube to be connected to the barbed fitting of the drain cock straight across, and the barbed fitting must be inserted completely as shown in the diagram.
   Also, after installing the tube, lightly pull on it to check that it does not come off.
6. Do not allow the tube on the barbed fitting of the drain cock to become severely bent or twisted close to the fitting.

NOTE Lateral force may damage the barbed fitting.

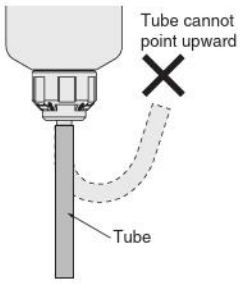

● Attaching and removing the bowl assembly

1. Be sure to release any pressure in the system before attaching (or removing) the bowl assembly.
2. Use the procedure shown in the diagram below to attach (or remove) the bowl assembly.
3. Squeeze the guard button to attach or remove the bowl assembly.

NOTE If there is a bowl guard, it may fall off when you squeeze it.

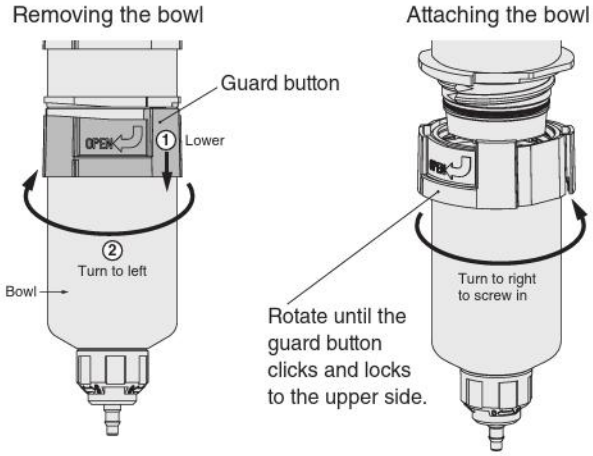

4. When attaching or removing the bowl assembly, move it vertically so you do not touch the internal component parts.

● Attaching and removing the bowl guard

1. Be sure to release any pressure in the system before attaching or removing the bowl guard.
2. Use the procedure shown in the diagram below to attach (or remove) the bowl guard.

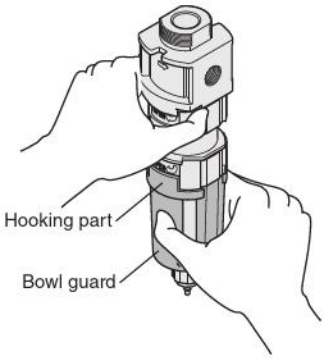

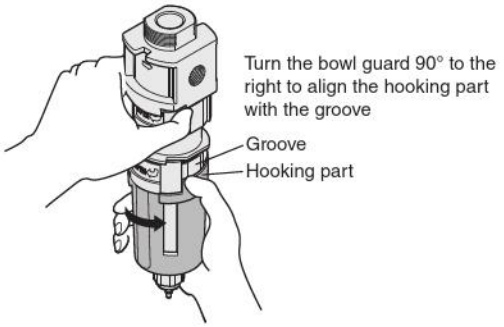

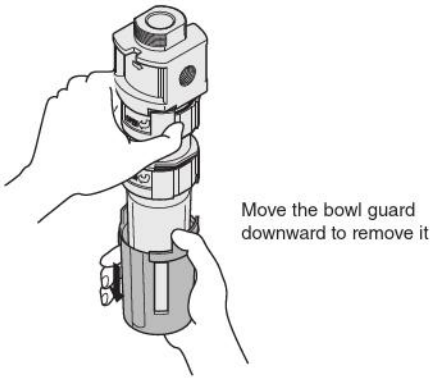

3. Use the reverse of the procedure shown in the diagram above to attach the bowl guard.

● Metal cover handling instructions

Mounting and removing the metal cover

Mount the metal cover according to the following procedure.

1. Enclose the body between cover A and cover B as shown by the black arrows in the diagram below (window can be positioned 180° opposite).
2. Tighten the hexagon socket bolts from the A cover side to 1.0 to 1.2 N·m [8.851 to 10.621 in·lbf].

To remove the metal cover, remove the hexagon socket bolts.

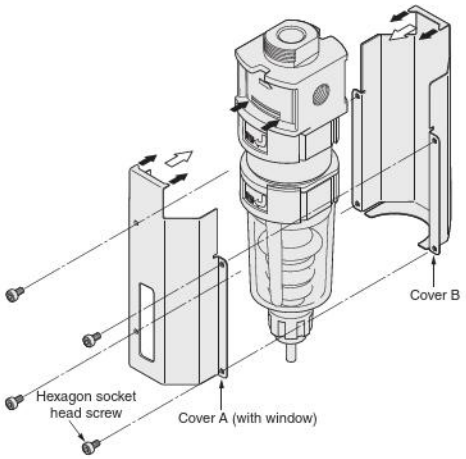

● Replacing the seal kit, element, and bowl assembly

1. To replace the seal kit, element, and bowl assembly, remove the air filter or (micro) oil mist filter and do the work on a work table.
2. Periodically replace the element of the air filter or (micro) oil mist filter.

NOTE The service life of the element varies depending on the quality of air supplied to the IN port (primary) side. If the air supplied to the IN port (primary) side is highly contaminated with foreign matter, install a prefilter on the IN port (primary) side or change the air filter frequently. As a guideline, the replacement time for the element is one year after starting to use it.

NOTE Always assemble the component parts correctly.

● Assembly and disassembly diagrams

FNZ□·MFZ□·MMFZ□

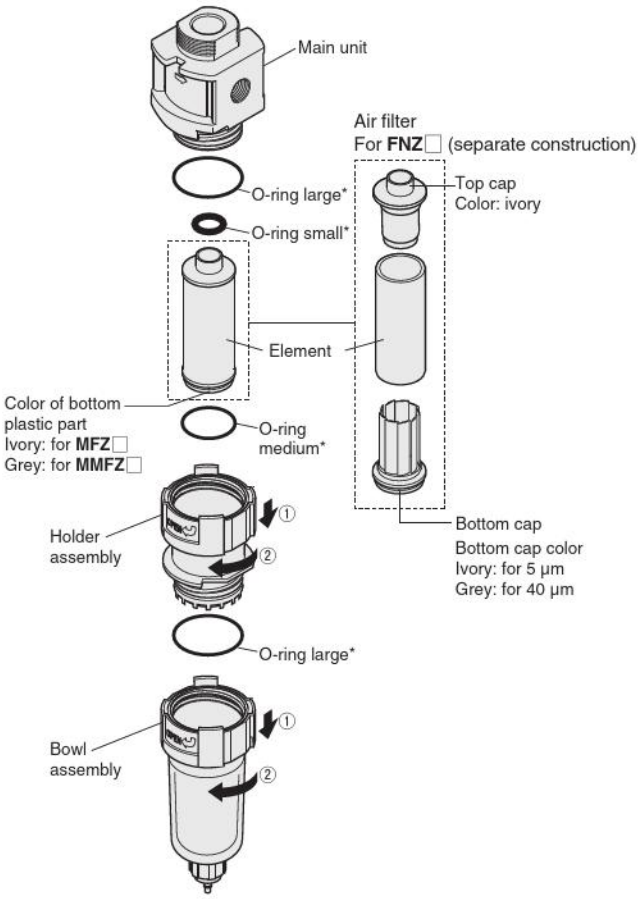

The * mark indicates component parts of the seal kit.

NOTE Products that have been disassembled and reassembled are not covered by the warranty.

● Explanation of operation of auto drain system

State \ Type	NO type	NC type
Not pressurized	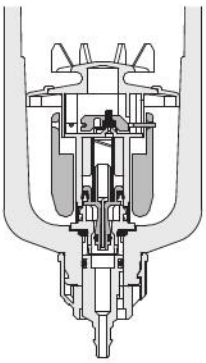 Open When unpressurized, the water outlet opens and the water drains naturally.	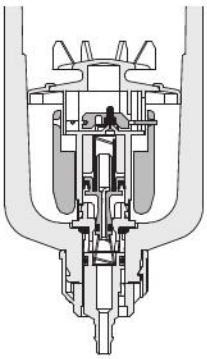 Close When unpressurized, the water outlet closes and the water cannot drain. Note: Water does not drain when unpressurized, if there is a lot of water even in an unpressurized (low pressure) condition, it may be necessary to drain the water by hand.
Pressurized	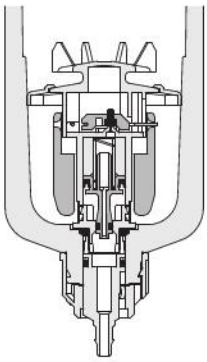 Close Air and water are periodically discharged from the water outlet until the minimum operating pressure (0.15 MPa [22 psi]) or higher is reached. The air and water will stop after the minimum operating pressure or more is reached. Note: A compressor with a small output may not reach full pressure, and there may be air output until the minimum operating pressure or higher is reached.	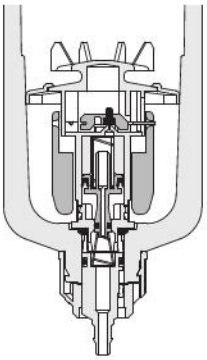 Close In the same way, when unpressurized, the water outlet closes and the water cannot drain.
Draining water	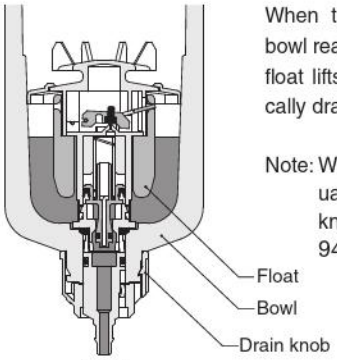 Open When the level of water in the bowl reaches a specified level, the float lifts and the water automatically drains. Note: Water can be drained manually by turning the drain knob to the left. See page 94 for details.	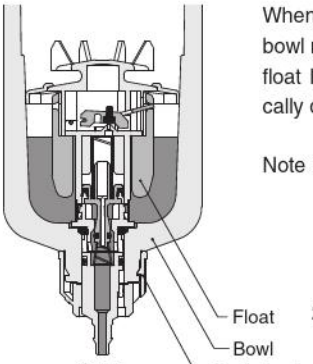 Open When the level of water in the bowl reaches a specified level, the float lifts and the water automatically drains. Note 1: Supply pressure is needed to operate the auto drain. Ensure that the supply pressure is 0.15 MPa [22 psi] or more. 2: Water can be drained manually by turning the drain knob to the left. See page 94 for details.
Draining water completed	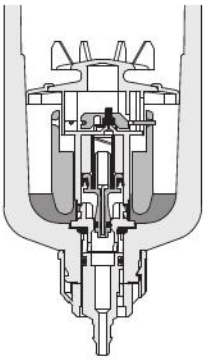 Close When the water drains, the float lowers and the water outlet closes, and water stops draining.	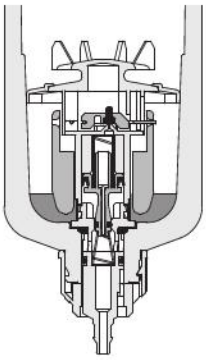 Close When the water drains, the float lowers and the water outlet closes, and water stops draining.

● Principles of fluid and dirt removal from air filters

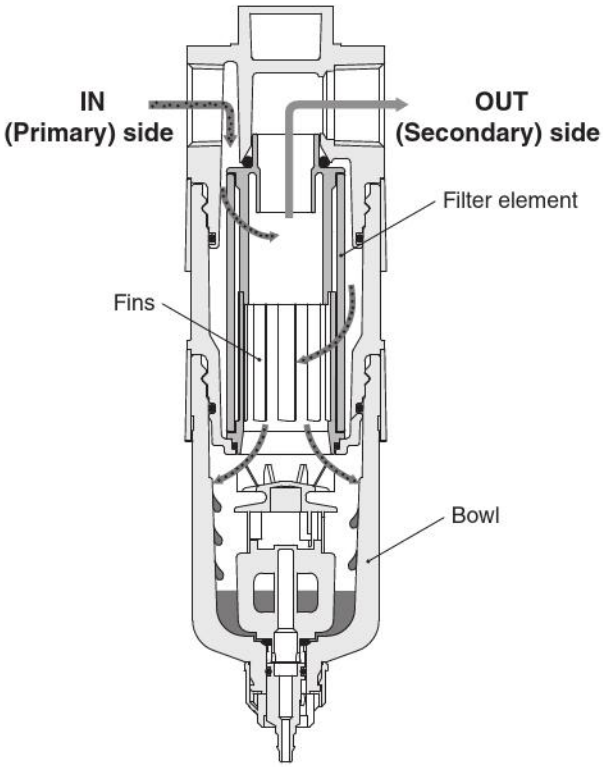

1. The element separates dirt from the air supplied from the IN port (primary) side.
2. Fluid aggregates due to the centrifugal separation from the swirling current created by the fins and collects in the bowl.
3. The air, from which the fluid and dirt have been separated, passes through the top part of the filter element to the OUT port (secondary).

● Principles of oil, and dirt removal from micro oil mist filters and oil mist filters

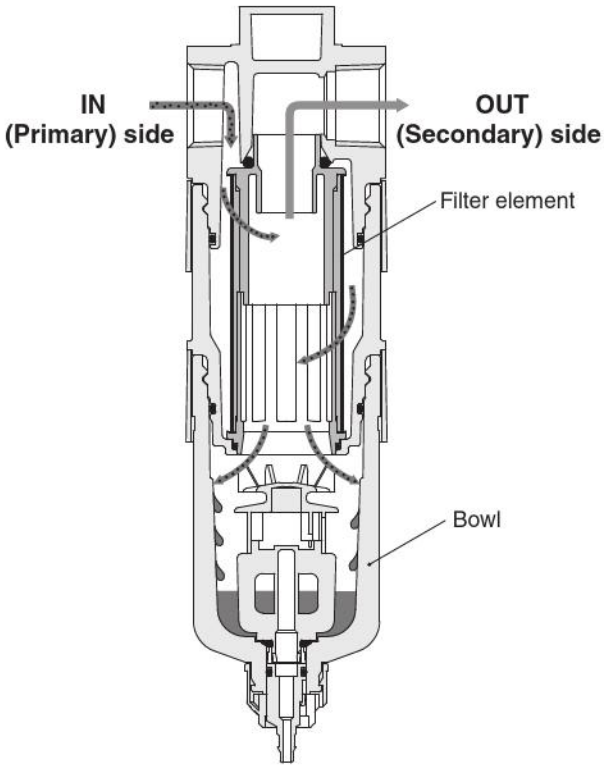

1. The element separates dirt from the air supplied from the IN port (primary) side.
2. Oil aggregates due to the centrifugal separation from the swirling current created by the fins and collects in the bowl.
3. The air, from which the oil has been separated, passes through the top part of the filter element to the OUT port (secondary).

FRZ Series

With moisture and
fluid removal functions

FRZB Filter Regulator

Easy-to-use moisture and fluid removal functions in a compact design!

Specialized **30 series**
for standalone applications

FRZB30

The **40 and 50 series**
can be used in combinations

FRZB40

FRZB50

Downsizing	Improved flow rate characteristics allow a smaller configuration (close side-by-side spacing possible).
Improved operability and maintainability	Handle operability improved and bowl is easy to attach/remove.
Pressure gauge, pressure switch	Compatible with □30 [1.181] integrated pressure gauge, other types of pressure gauges, and pressure switches.
Compatible in a wide range of environments	Specifications for ozone resistance, NCU specifications (copper free) Note compatible as standard. Note: Excluding pressure switch and pressure gauge options.

CAUTION Read the safety precautions on page 9 before using this product.

Compact design

Improved flow rate characteristics allow a smaller configuration.
* Comparison between our filter regulators **FR600** and **FRZB50**.

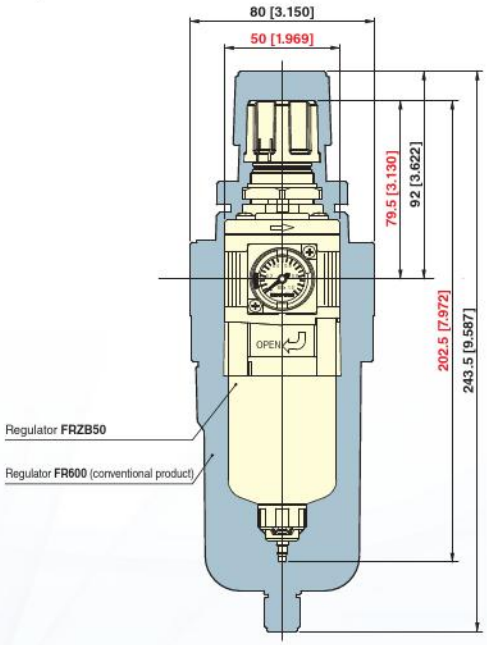

Improved handle operability

- The shape and size of the easy-to-operate handle make it light and smooth to turn. In addition, improving the resolution of the handle lock has reduced fluctuations in the set pressure when the handle is locked.
- The caution ring (yellow) allows you to check the state of the handle's lock as it is released.

Handle
The handle can be removed by using the mounting ring. This is useful for preventing the handle from being operated.

Yellow caution ring
Exposed as handle is unlocked

Mounting ring

Drain cock specifications

Drain cock with fitting or auto drain types can be selected for the drain cock specifications.

Auto drain type
NO (Normally open)
NC (Normally closed)

Drain cock with fitting

□30 [1.181] integrated pressure gauge

- □30 [1.181] integrated pressure gauge is compact with minimal protrusions. Plus, the easy-to-read display angle of 270° improves visibility.

Swing angle 270°

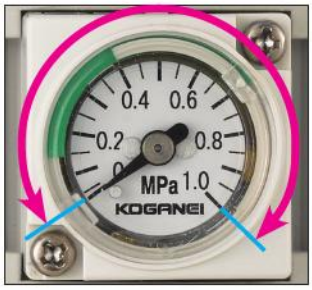

- The set pressure range (green area) can be changed as desired. The upper and lower limits of the setting range can be freely changed without removing the front cover (transparent resin part) or using tools.

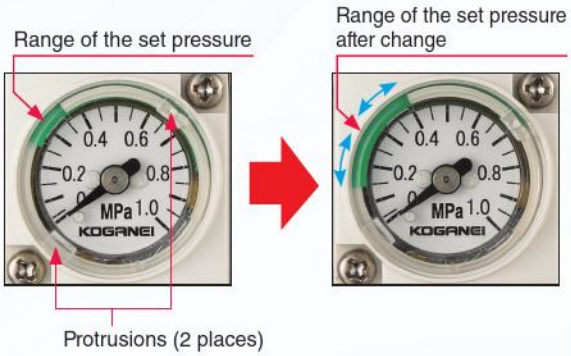

By rotating the protrusions (two locations) clockwise or counterclockwise, the display of the set pressure range can be changed as desired.

* Other pressure gauges and pressure switches are also available.
For details, see the next page.

Bowl guard (option)

Bowl guard option is available.

Pressure gauge, pressure switch

Various pressure gauges and pressure switches can be selected in addition to the □30 [1.181] integrated pressure gauge.

ϕ40 [1.575] pressure gauge
(1 MPa [145 psi] specifications)

ϕ40 [1.575] pressure gauge
(0.3 MPa [44 psi] specifications)

ϕ40 [1.575] stainless steel
bourdon tube pressure gauge
(1 MPa [145 psi] specifications)

ϕ40 [1.575] stainless steel
bourdon tube pressure gauge
(0.3 MPa [44 psi] specifications)

Digital pressure switch
GS620
(1 MPa [145 psi] specifications)

Pressure gauge with
built-in switch
(1 MPa [145 psi] specifications)

Bracket

The brackets can be used with all sizes of the FRZB filter regulators.

Also, brackets can be used with the iB-Cyclone and others in the FRZ series.

Panel mount installation

The hole diameter for a panel mount is standardized at 28.5 mm [1.122 in.] for all sizes of the FRZB filter regulators.

Note: There are restrictions on the installation (mounting) orientation of the FRZB filter regulator.

Filter regulator

FRZB30·FRZB31·FRZB32
FRZB40·FRZB41
FRZB50·FRZB51

Symbols

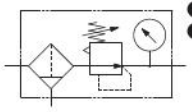

● Standard
● For low pressure

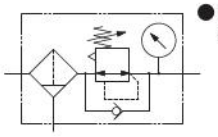

● Built-in check mechanism

Specifications

Item \ Model		Standard	FRZB30	FRZB40	FRZB50
		For low pressure	FRZB31	FRZB41	FRZB51
		Built-in check mechanism	FRZB32	-	-
Media			Air		
Port size			M5×0.8, Rc1/8, Rc1/4	Rc1/8, Rc1/4, Rc3/8	Rc1/4, Rc3/8, Rc1/2
Maximum operating pressure	MPa [psi]		1.0 [145]		
Proof pressure	MPa [psi]		1.5 [218]		
Operating temperature range (atmospheric and medium)	°C [°F]		5 to 60 [41 to 140] (non-condensation)		
Filtration	μm		5		
Pressure regulating system			Direct acting/relief type	Internal pilot/relief type	
Set pressure range	MPa [psi]	Standard/Built-in check mechanism	0.05 to 0.85 [7 to 123]		
		For low pressure	0.05 to 0.40 [7 to 58]		
Relief starting pressure	MPa [psi]		Set pressure +0.05 [7] or less		
Water collection volume (for **-N**)	mℓ [in³]		13 [0.793]	16 [0.976]	27 [1.648]
Major Parts and Materials		Main unit	Die cast aluminum alloy		
		Bonnet & adapter	Polyacetal		
		Diaphragm	Base fabric + synthetic rubber		
		Bowl	PC (polycarbonate)/PCT (Polycyclohexylene-dimethylene terephthalate) Note 3		
		Filter element	Nonwoven fabrics		
		Bracket	Steel plate (electroless nickel plated)		
Weight (for standard specifications and maximum port size)	kg [lb]		0.20 [0.441] (0.21 [0.463]) Note 4	0.24 [0.529] (0.25 [0.551]) Note 4	0.33 [0.728] (0.34 [0.750]) Note 4
Standard equipment			Mounting ring		
Options Note 1, Note 2			Auto drain (NO and NC), bowl guard (plastic and combined) □30 [1.181] integrated pressure gauge (combined), various other pressure gauges (included parts), bracket (included parts)		

Note 1: If auto drain is selected as an option, ensure that the supply pressure is above 0.15 MPa [22 psi] (supply pressure is necessary for auto drain operations).
2: See page 151 and onward for individual product specifications or the order code column for details about each option.
3: Use a PCT resin bowl when using products in a location with a poor atmosphere (places with a risk of exposure to cutting oil, machine oil, etc.).
4: Weights in ( ) parentheses are the weights with a bowl.

Remarks: **FRZB4**□ and **FRZB5**□ are internal pilot types, so the secondary side consumes a small amount of air to adjust pressure.

Order Codes

FRZB □ – □ – □ – □ – □ – □ – □

Bowl specifications
Blank — Standard specifications (polycarbonate)
P — PCT resin bowl Note
Note: Use a PCT resin bowl when using products in a location with a poor atmosphere (places with a risk of exposure to cutting oil, machine oil, etc.).

Bowl guard specifications
Blank — No bowl guard
PG — With bowl guard

Drain cock specifications
A — Auto drain type drain cock NO type
C — Auto drain type drain cock NC type
N — Drain cock with fitting

Main unit Model	Port size M5	Rc1/8	Rc1/4	Rc3/8	Rc1/2	
30	M5	01	02			Standard
40		01	02	03		Standard
50			02	03	04	Standard
31	M5	01	02			For low pressure
41		01	02	03		For low pressure
51			02	03	04	For low pressure
32	M5	01	02			Built-in check mechanism

FRZB Filter Regulator

Bracket
Blank — No bracket
B — With bracket

Pressure gauge specifications
Blank — No pressure gauge (with pressure gauge connection port, Rc1/4)
GP1 — No pressure gauge (with pressure gauge connection port, Rc1/8)
GN — No pressure gauge (no pressure gauge connection port)
G1C — 1 MPa [145 psi] specifications, □30 [1.181] integrated pressure gauge
G4C — 0.4 MPa [58 psi] specifications, □30 [1.181] integrated pressure gauge
G1 — 1 MPa [145 psi] specifications, ϕ40 [1.575] pressure gauge
G3 — 0.3 MPa [44 psi] specifications, ϕ40 [1.575] pressure gauge
G1S — 1 MPa [145 psi] specifications, ϕ40 [1.575] stainless steel bourdon tube pressure gauge
G3S — 0.3 MPa [44 psi] specifications, ϕ40 [1.575] stainless steel bourdon tube pressure gauge
GS6 — 1 MPa [145 psi] specifications, digital pressure switch
GS1A — 1 MPa [145 psi] specifications □50 [1.969] pressure gauge with built-in switch Lead wire system for 24 VDC
GS1B — 1 MPa [145 psi] specifications □50 [1.969] pressure gauge with built-in switch Lead wire system for 100 VAC, 200 VAC
GS1C — 1 MPa [145 psi] specifications □50 [1.969] pressure gauge with built-in switch With DIN type connector for 24 VDC
GS1D — 1 MPa [145 psi] specifications □50 [1.969] pressure gauge with built-in switch With DIN type connector for 100 VAC, 200 VAC

Note: For specifications of pressure gauges, digital pressure switches, and pressure gauges with switches built in, order codes for individual purchases, and dimensions, see pages 154 to 161.

Order Codes

● Order codes for brackets only

8Z-BK

* Compatible brackets (to replace multi-series **FR15□·FR30□·FR60□** filter regulators)

* For details, refer to pages 151 to 153.

8Z-BK□

Body size
30 — **FR15□** → replaced by **FRZB3□**
40 — **FR30□** → replaced by **FRZB4□**
50 — **FR60□** → replaced by **FRZB5□**

● Maintenance parts

● Bowl assembly

BA-FRZB□-□-□-□

Bowl specifications
Blank — Standard specifications (polycarbonate)
P — PCT resin bowl

Body size
30 — for **FRZB3□**
40 — for **FRZB4□**
50 — for **FRZB5□**

Drain cock specifications
A — NO type auto drain drain cock
C — NC type auto drain drain cock
N — Drain cock with fitting

Auto drain type
NO type
NC type

With fitting
Drain cock

Bowl guard specifications
Blank — No bowl guard
PG — With bowl guard

With bowl guard

● Element

E-□ZB

Body size
30 — for **FRZB3□**
40 — for **FRZB4□**
50 — for **FRZB5□**

● Pressure port plate

P-FRZ (no pressure gauge connection port)

With 1 O-ring and
2 small screws

GP-FRZ□ (with pressure gauge connection port)

Port size
Blank — Rc1/4
1 — Rc1/8

With 1 O-ring and
2 small screws

● Seal kit (various O-rings, 1 valve assembly, 1 diaphragm assembly)

SRK-FRZ□

Body size
30 — for **FRZ3□**
40 — for **FRZ4□**
50 — for **FRZ5□**

Refer to "Replacing the seal kit, element, and bowl assembly" on page 115 regarding the component parts of the seal kits.

● Handle

H-FRZ

● Mounting ring

R-FRZ

Inner construction

FRZB3□

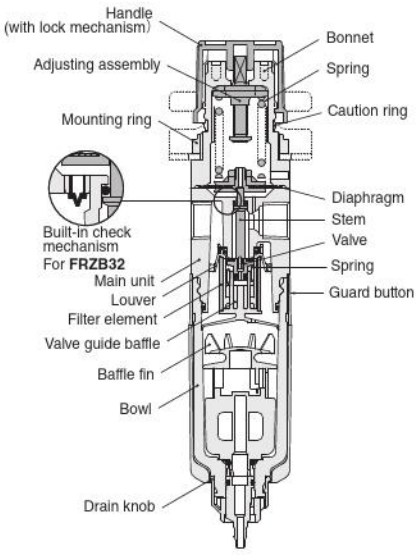

FRZB4□·FRZB5□

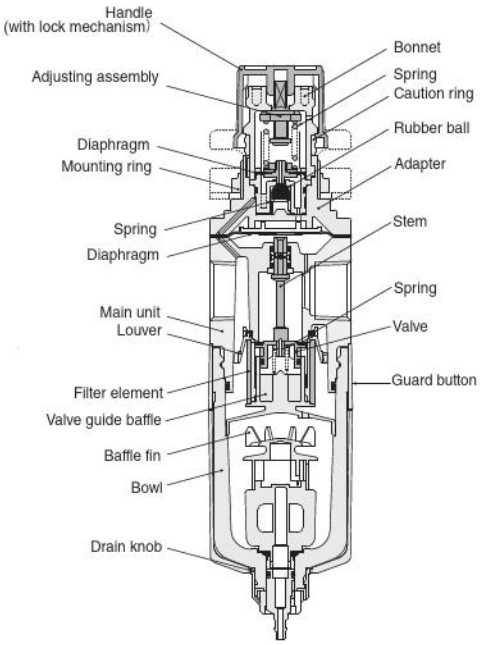

Flow rate characteristics

● Standard/Built-in check mechanism

FRZB30-M5
FRZB32-M5

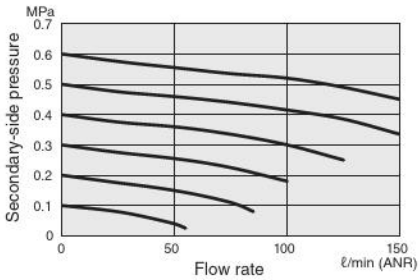

FRZB40-01

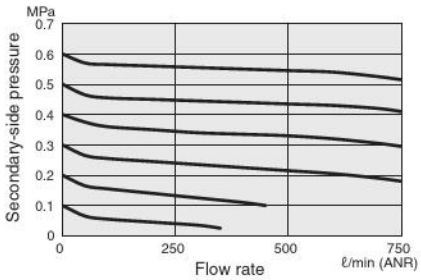

FRZB50-02

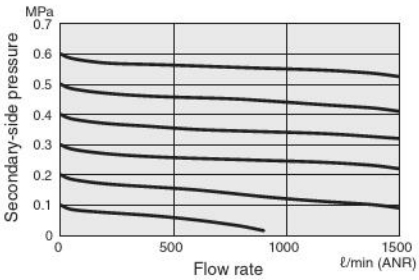

FRZB30-01
FRZB32-01

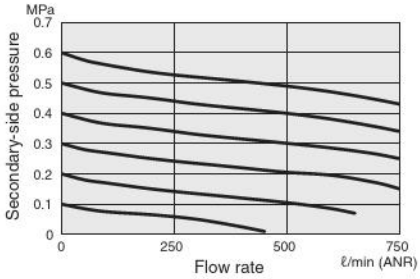

FRZB40-02

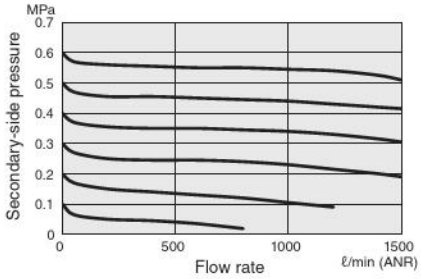

FRZB50-03

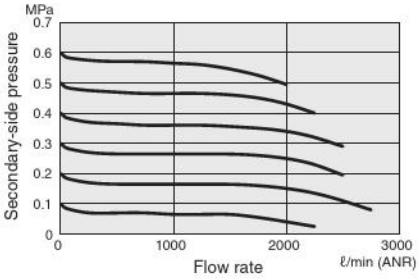

FRZB30-02
FRZB32-02

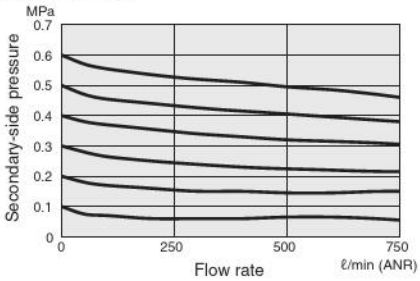

FRZB40-03

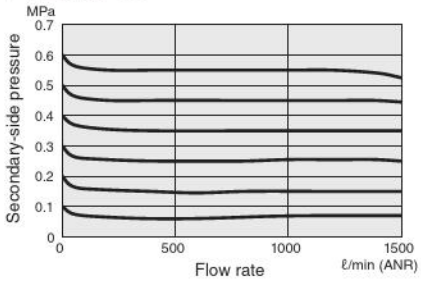

FRZB50-04

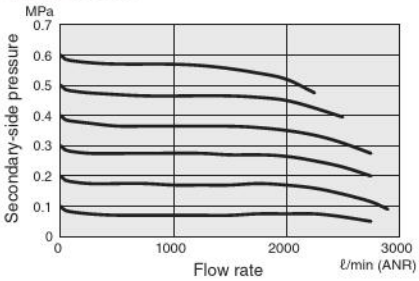

Remarks: Graphs show flow rate characteristics at constant primary-side pressure of 0.7 MPa [102 psi].

Pressure characteristics

● Standard/Built-in check mechanism

FRZB30
FRZB32

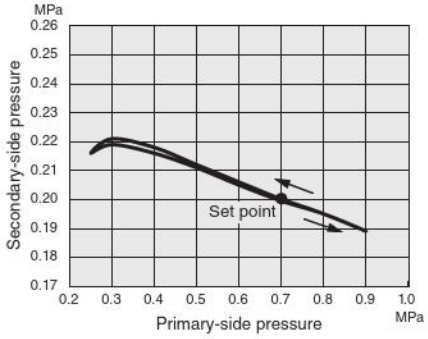

FRZB40

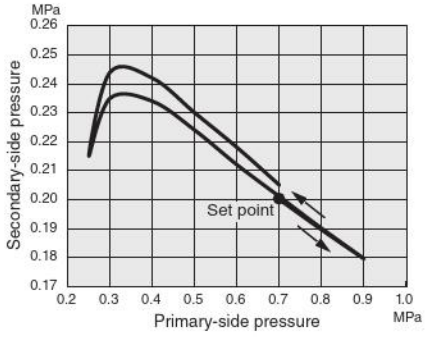

FRZB50

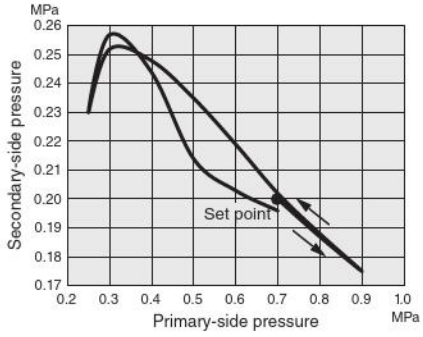

● **FRZB30**
● **FRZB31**
● **FRZB32**

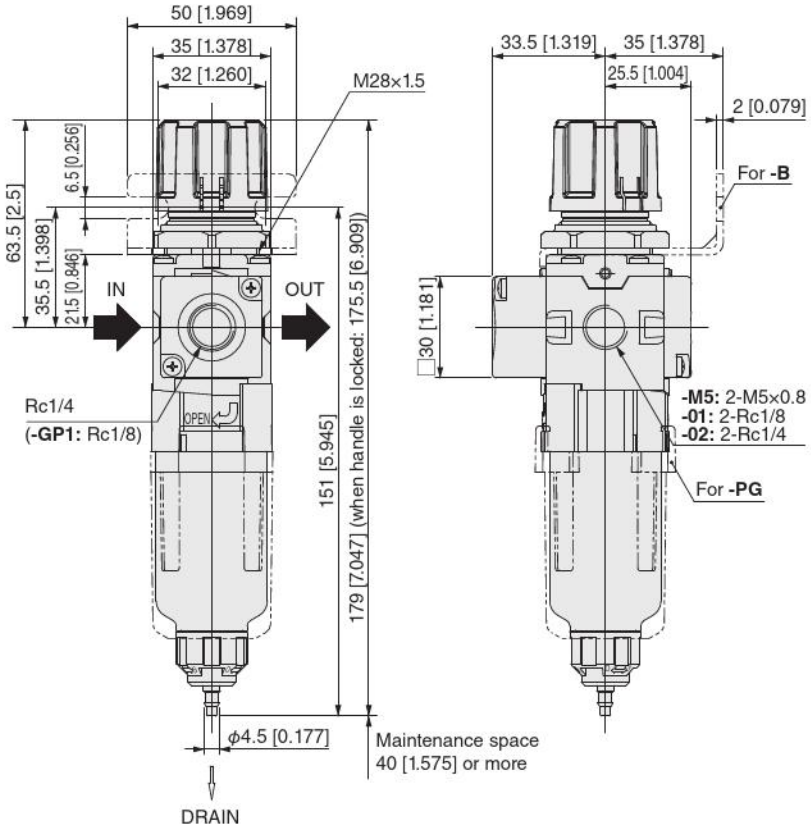

● Pressure gauge option

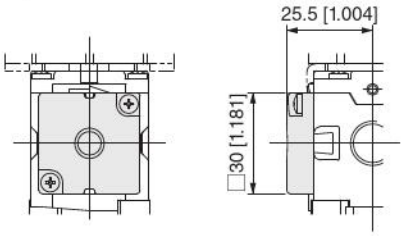

For **-GN**

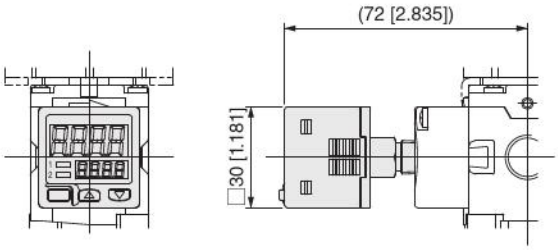

For **-GS6**

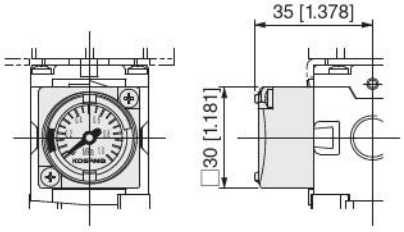

For **-G1C**, **-G4C**

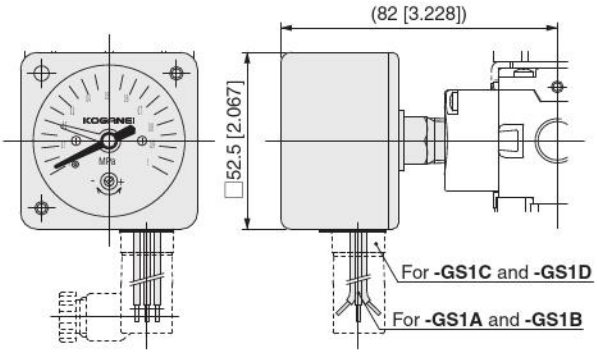

For **-GS1A**, **-GS1B**, **-GS1C** and **-GS1D**

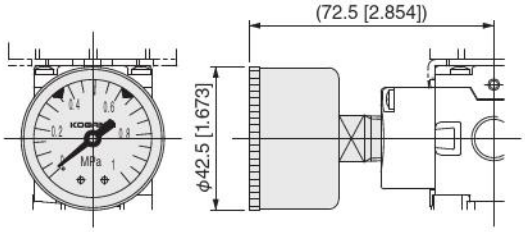

For **-G1**, **-G3**

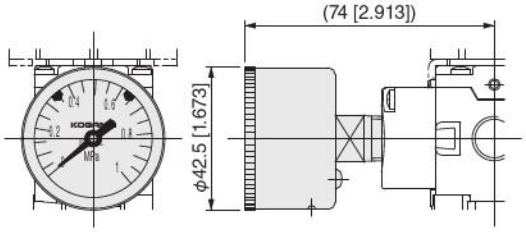

For **-G1S**, **-G3S**

●FRZB40
●FRZB41

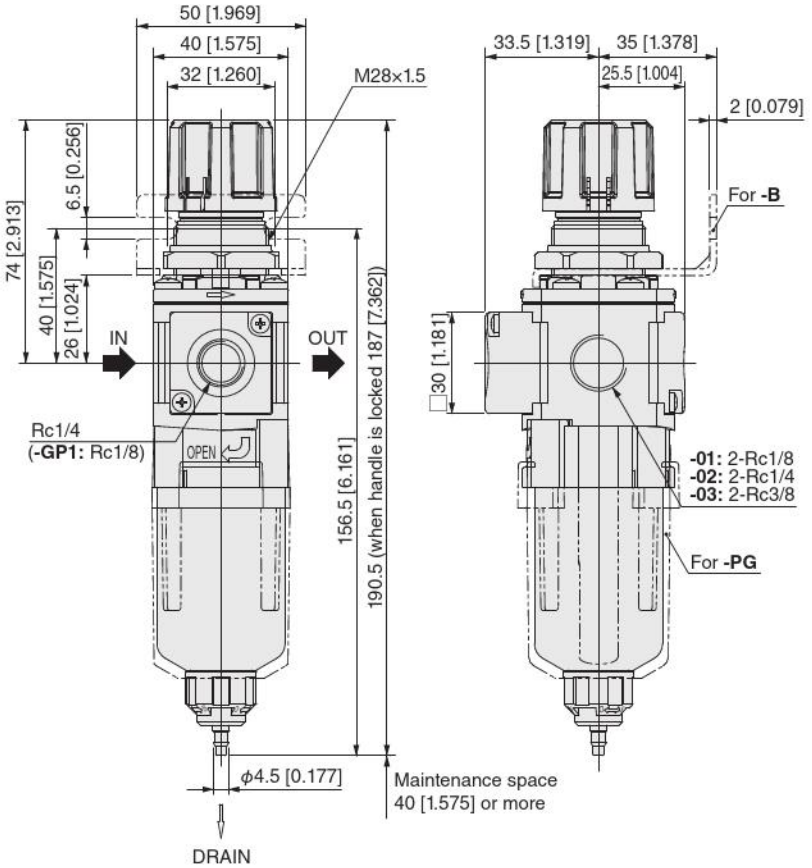

● Pressure gauge option

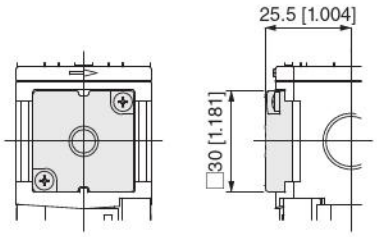

For **-GN**

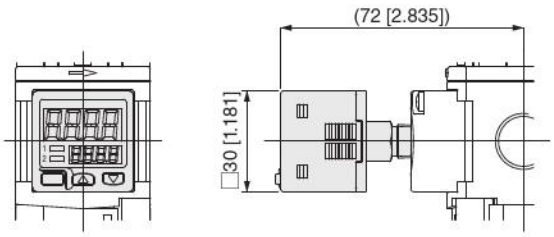

For **-GS6**

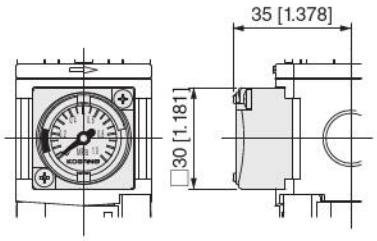

For **-G1C**, **-G4C**

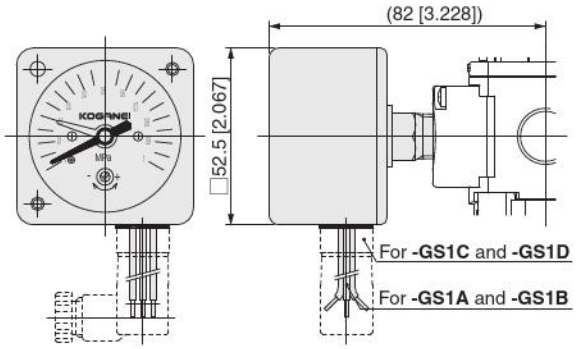

For **-GS1A**, **-GS1B**, **-GS1C** and **-G1S**

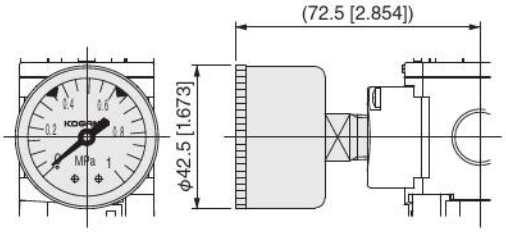

For **-G1**, **-G3**

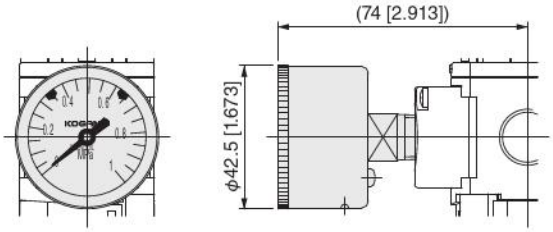

For **-G1S**, **-G3S**

Filter regulator dimensions (mm [in.])

● **FRZB50**
● **FRZB51**

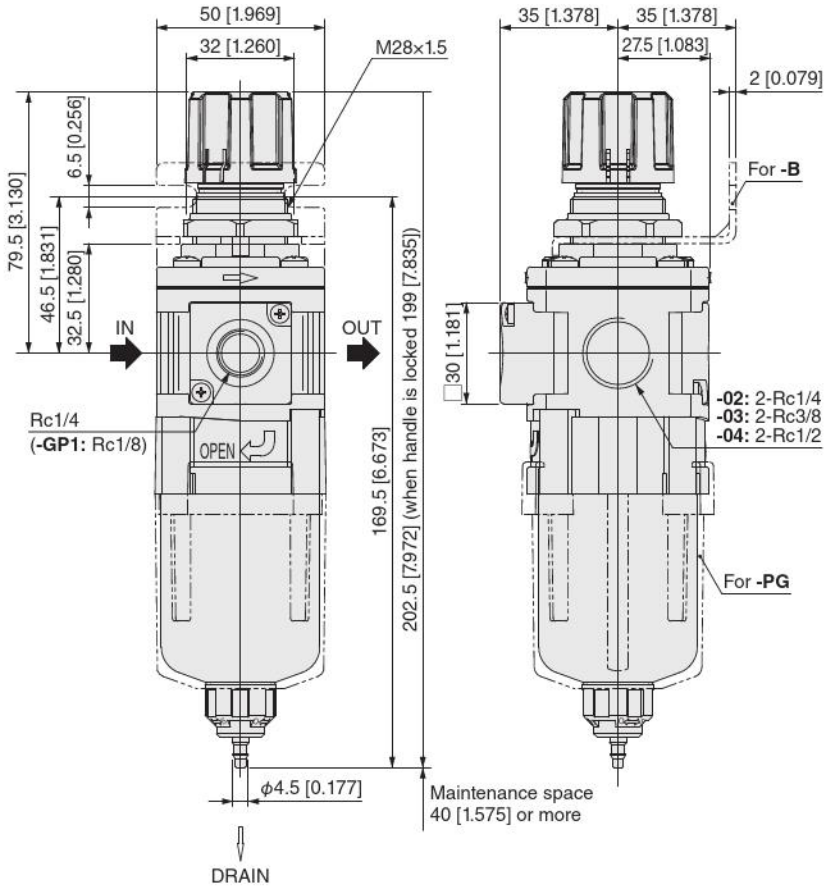

● Pressure gauge option

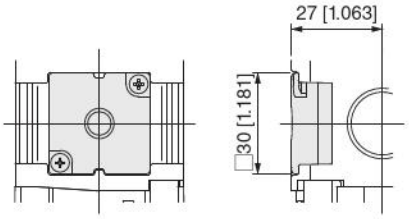

For **-GN**

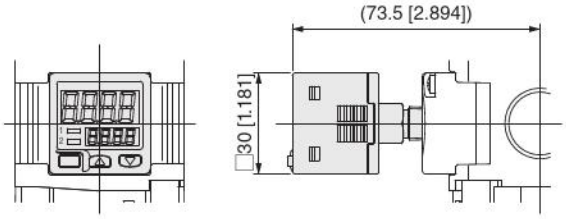

For **-GS6**

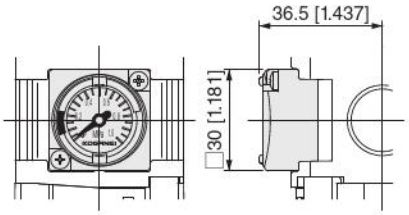

For **-G1C**, **-G4C**

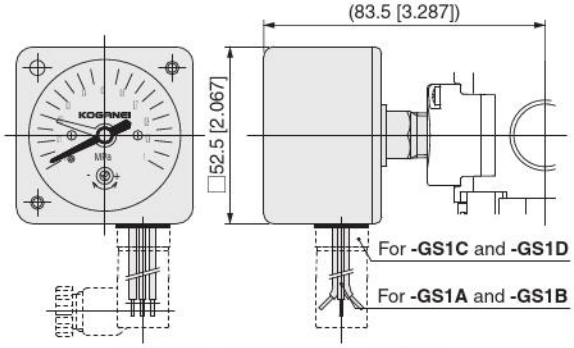

For **-GS1A**, **-GS1B**, **-GS1C** and **-GS1D**

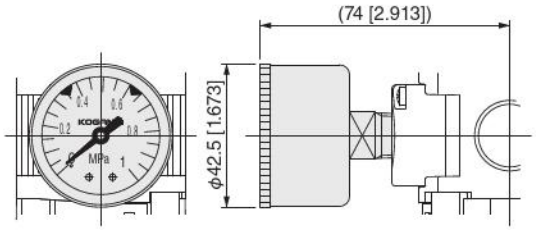

For **-G1**, **-G3**

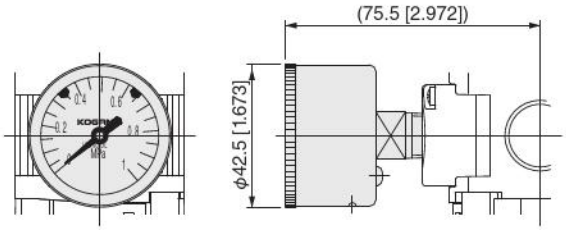

For **-G1S**, **-G3S**

Design and selection

● Selection

See the Handling Instructions and Precautions, Specifications, Various Characteristics, Dimensions, and other technical materials for each product to make the correct decision.

Mounting (installation) and piping

● Mounting (installation) direction, support, and securing

1. The products cannot be mounted (installed) if a bending moment or twisting moment is applied to the product or piping.

NOTE Applying bending moment or twisting moment may damage the product.

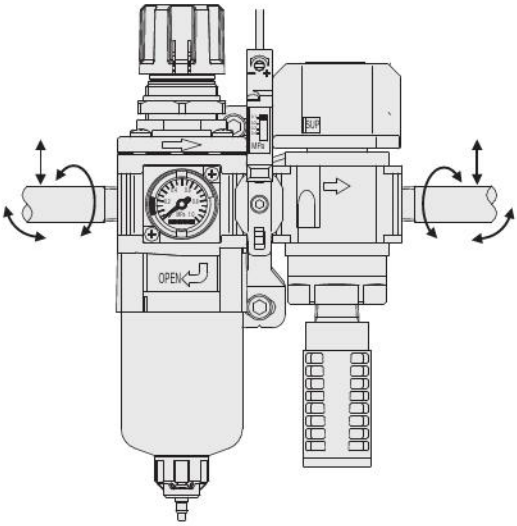

2. Do not attach piping so that just one side is fixed as shown in the following diagram. Support external piping separately.

NOTE The moment caused by the OUT (secondary) side pipes may damage the product's piping connections.

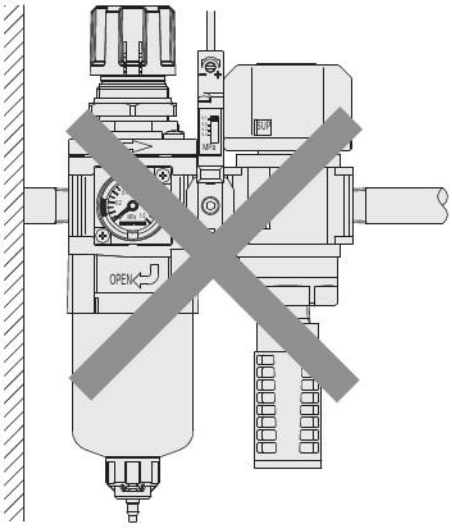

3. Use the brackets to install the products.
4. When mounting (installing) products, always make sure they are secured and sufficiently supported.

NOTE If a product is not securely fixed in place, it may fall over, be dropped, or operate abnormally and cause an injury.

● Maintenance space requirements

Assure there is sufficient space for maintenance inspections and maintenance work.
See the dimension diagram for each of the products regarding the maintenance space.

NOTE If there is not enough allowance for maintenance space, it is impossible to remove the bowl assembly and replace the filter. Also, it is impossible to do maintenance inspections so the equipment may stop or the product may be damaged.

● Attaching steel pipes and fittings

If steel pipes and fittings are attached to the threaded sections of the aluminum die-cast parts of the product, tighten them to the torque recommended in our standards.

NOTE Tightening with excess torque may damage the product or injure workers or operators.

Recommended tightening torque N·m [ft·lbf]

Connecting thread	M5	1/8	1/4	3/8	1/2
Torque	1 to 1.5 [0.738 to 1.106]	4.5 to 6.5 [3.319 to 4.794]	7 to 9 [5.163 to 6.638]	12.5 to 14.5 [9.220 to 10.695]	20 to 22 [14.752 to 16.227]

NOTE When mounting the various pressure gauges to a pressure port plate with Rc1/8 or Rc1/4, tighten them to 3.0 to 5.0 N·m [2.213 to 3.688 ft·lbf].

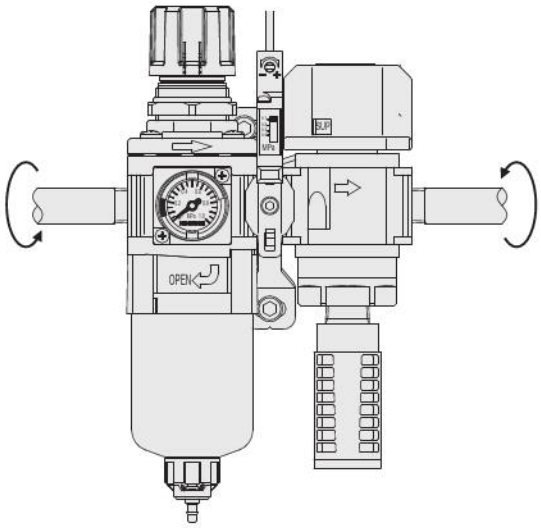

● Preventing contamination by foreign matter

1. Remove all foreign matter, such as metal chips, cutting oil, or dirt, from inside pipes with an air blower (flushing) and thorough washing before fitting the pipes.
2. Do not allow foreign matter, such as metal chips, or sealing tape from the piping threads, to get into the pipes when fitting the pipes.

NOTE Foreign matter entering the piping may damage the product or reduce its performance and service life.

3. Wrap the sealing tape in the direction as shown in the diagram below leaving 1.5 to 2 threads uncovered. When using liquid sealant, apply a suitable amount and in the same way leave 1.5 to 2 threads uncovered.

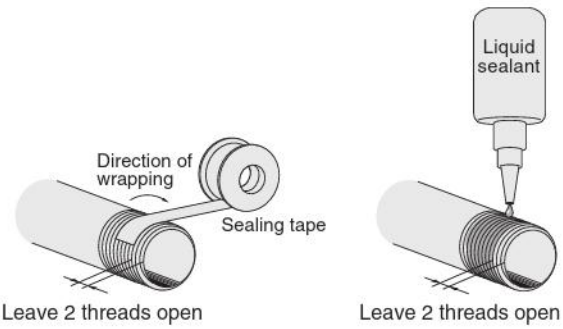

NOTE When fitting the pipes, if there is sealing tape or liquid sealant on the end cap of the steel pipes or fittings, the fragments may get into the pipes and cause an air leak.

4. If you are using liquid sealant, do not get it on the bowl of the filter regulator or the front cover of the pressure gauge.

NOTE If liquid sealant gets on the parts, it may damage them.

Medium and operating environment

● Usable medium

1. Use cleaned air (using a filter of 40 µm or less) for the medium. Contact the nearest Koganei sales office or overseas department if you are considering using something other than cleaned air.

NOTE Contact a Koganei sales office or overseas department if you are considering using something other than air.

2. Avoid using air that contains too much moisture and fluid.

NOTE Using air that contains too much moisture and fluids will cause the product's functions to stop after a short period and will reduce the product performance and service life.

3. If air that contains moisture and fluids is used, or if it is possible that they may be mixed in with the air being used, we recommend using the iB-Cyclone to reliably remove moisture and fluids.

NOTE When using an iB-Cyclone, install an FRZ series filter regulator (without moisture and fluid removal function) on the secondary side.

4. Do not use the product if the media being used is prone to extreme pulsating or surging.

NOTE Medium prone to extreme pulsating or surging will cause the product's functions to stop after a short period and will reduce the product performance and service life.

● Operating environment

1. Do not use the product in locations that are subject to direct sunlight (ultraviolet rays); locations with high humidity and temperature, dust, salt, or iron powder.
2. Cover the unit when using it in locations where it might be subject to excessive dust, dripping water, dripping oil, etc.
3. Do not use the product in environments subject to external vibration or impact.

NOTE External vibrations or shocks may result in damage to component parts.

4. Avoid piping that is rigid, such as steel piping, if vibrations are transmitted. Use flexible tubes so that the product is not subject to the vibrations.

● Medium and operating environment

1. The temperature of the medium and the ambient environment must be within the range in the specifications.

NOTE Using the product in an environment that is outside the specified temperature or with media that is outside the specified temperature will cause the product's functions to stop after a short period and will reduce the product performance and service life.

2. Use a device, such as a freeze-type air dryer or after cooler, to lower the dew-point temperature of the medium to below the ambient temperature so condensation or frost does not occur in the secondary pipes.

NOTE If condensation or frost forms in the product, it may get into the secondary side.

3. Do not use media in the product or use the product in an environment that includes corrosive components such as organic solvents, phosphate ester type hydraulic oil, sulfur dioxide, chlorine gas, Freon gas, ozone, acids, alkaline, or in atmospheres or locations where there is screw lock agents, leak detection fluids, or hot water, or direct exposure to ultraviolet rays. See the reference materials on page 162 for details.

NOTE Using the product in an environment or with media that is specified in the above item 3 will cause the product's functions to stop after a short period and will reduce the product performance and service life.

Operation and maintenance inspections

● Method of use

Read the Handling Instructions and Precautions for each product for instructions on correct usage (filter regulators on page 110 to 116, □30 [1.181] integrated pressure gauge on page 116).

● Maintenance (maintenance inspection)

1. Performance and functions may decrease as the pneumatic equipment ages. Always conduct daily inspections of the pneumatic equipment, and confirm that all requisite system functions are satisfied, to prevent accidents from happening.
2. Read the Handling Instructions and Precautions for instructions on maintenance and replacing maintenance parts (filter regulators on pages 115 to 116).
3. The product must be disassembled and reassembled to use the seal kit.

NOTE The product is no longer under warranty if it is disassembled and reassembled.

Design and selection

● Installed directly on compressor

Do not install the product directly on a compressor. If you do, provide sufficient countermeasures for temperature control, and removing oils and solids.

NOTE Not using countermeasures may cause the product's functions to stop after a short period and may reduce the product performance and service life.

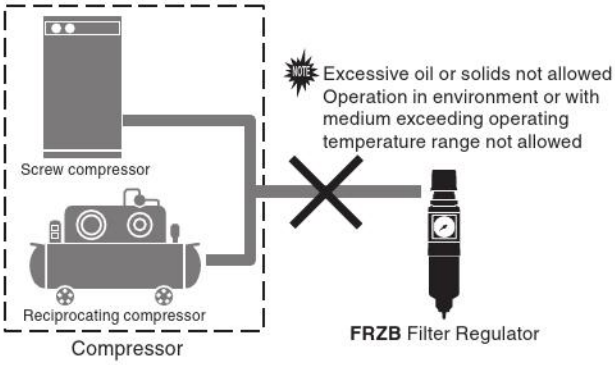

● Moisture and fluid removal functions

1. The moisture and fluid removal function built into the FRZB filter regulator is a simple function. The moisture and fluid removal and separation rates vary depending on conditions.

   NOTE Use an iB-Cyclone to effectively remove moisture and fluid.

2. For the principles of the moisture and fluid removal by the FRZB filter regulator, refer to "Principles of moisture and fluid removal" on page 118.

● Dehumidification and oil mist removal

1. A filter regulator cannot be used to dehumidify.

   NOTE Install a film air dryer or something on the secondary side if dehumidifying is needed.

2. A filter regulator cannot be used to remove oil mist.

   NOTE Install an oil mist filter or something on the secondary side if oil mist removal is needed.

● Pressure settings

1. If the pressure being applied exceeds the set pressure value of the device or equipment that is installed on the OUT port (secondary) side of the filter regulator, such that it may damage the device or equipment or cause malfunctions, then be sure to install a safety device.
2. We recommended that the OUT port (secondary) side pressure setting be 85% or less of the IN port (primary) side supply pressure.

   NOTE If the pressure is set to a value exceeding 85%, the pressure on the IN port (primary) side and the flow rate used will be easily affected, causing the pressure on the OUT port (secondary) side to become unstable.

3. It is not possible to use an internal pilot type filter regulator (FRZB4□/FRZB5□) with a valve installed on the IN port (primary) side to repeatedly switch the IN port (primary) side pressure.

   NOTE The OUT port (secondary) side set pressure may fluctuate due to switching of the IN port (primary) side pressure.

4. If air is not consumed for a long time, or if a sealed circuit or balance circuit is used, the pressure on the OUT port (secondary) side may fluctuate. Contact a Koganei sales office or overseas department.
5. Contact a Koganei sales office or overseas department if you intend to use the product in a circuit that requires high-precision pressure adjustment.

● OUT port (secondary) side pressure exhaust and breather hole

1. When reducing the OUT port (secondary) side pressure by turning the handle on the filter regulator, or when exhausting OUT port (secondary) side pressure when it has risen above the set pressure, the pressure is exhausted to the outside through the breather hole shown in the figure below.

   NOTE There may be some vibration and noise during exhaust.

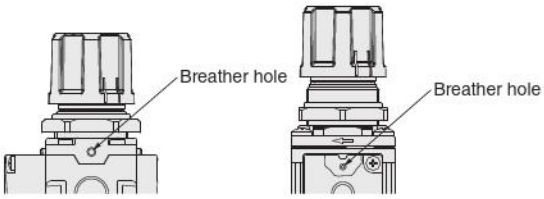

For **FRZB3**□ For **FRZB4**□, **FRZB5**□

2. If sudden pressure increases occur on the OUT port (secondary) side of the filter regulator, such as are caused by external forces applied to the actuator, then install a separate exhaust mechanism on the OUT port (secondary) side of the filter regulator.

   NOTE The relief port is smaller than the piping bore, so it may not be able to handle a sudden pressure increase on the OUT port (secondary) side.

● **Backflow (residual pressure exhaust) from the OUT port (secondary) to the IN port (primary)**

1. To release the pressure from the IN port (primary) of a direct-acting filter regulator (applicable models FRZB30/FRZB31) and process the residual pressure from the OUT port (secondary), select a filter regulator with a built-in check valve (applicable model FRZB32).

   NOTE Depending on the conditions of use, etc., processing residual pressure on the secondary-side may not be possible for the standard and low-pressure specifications.

2. For internal pilot type filter regulators (applicable models FRZB4□ and FRZB5□), when the pressure on the IN port (primary) side is released, the residual pressure on the OUT port (secondary) side is processed through the relief port.

   NOTE If the volume of the OUT port (secondary) side flow passage is large, exhausting it will take time, so install a residual pressure exhaust valve on the OUT port (secondary) side of the product.

3. If you are using a filter regulator with a built-in check mechanism (applicable model FRZB32) installed after the valve to adjust the actuator thrust, make sure that the pressure on the OUT port (secondary) side of the filter regulator with a built-in check mechanism does not rise above the set pressure due to the back pressure of the actuator (as a guide, use an actuator with a difference in pressure of 0.3 MPa [44 psi] or less between the push side and pull side).

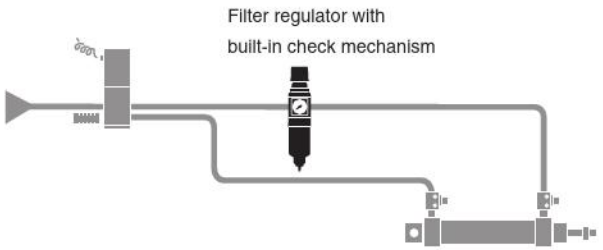

● **Air consumption**

1. Internal pilot type filter regulators (applicable models FRZB4□ and FRZB5□) consume air while regulating the OUT port (secondary) side pressure.
2. Air consumption varies depending on the relationship between the pressure on the IN port (primary) side and the pressure on the OUT port (secondary) side.
3. Internal pilot type filter regulators (FRZB4□/FRZB5□) if the IN port (primary) side and OUT port (secondary) side are sealed, the pressure will drop due to air consumption.

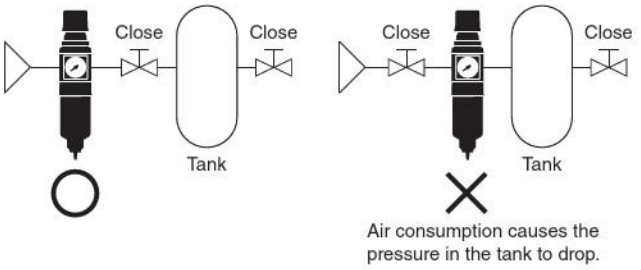

Mounting (installation) and piping

● **Mounting (installation) direction**

Mount (install) the FRZB Filter Regulator vertically so the handle is on top and the drain outlet is down.

● **Direction of flow**

1. Connect the filter regulator so that the medium flows in the IN port (primary) side and out the OUT port (secondary) side.
2. Use the flow marks on the products to identify the primary port and secondary port of the filter regulators.

   NOTE Reversing the IN port (primary) side and the OUT port (secondary) side connections damages the product and causes it to stop functioning.

● **Flow mark**

The following diagram shows the relationship of the direction of flow of the medium and the flow mark on filter regulators.

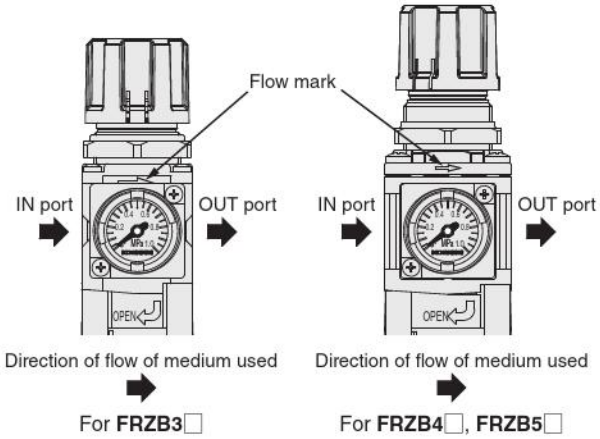

● **Piping work**

Connect steel pipes and fittings to the filter regulator IN ports and OUT ports so that the weight and torque of the pipes do not affect the product. When tightening the piping, hold the main unit and tighten it to the torque recommended on page 108.

NOTE Applying unnecessary force or impact to the handle, bowl assembly, or pressure gauge may damage component parts.

● **Installing brackets**

To install brackets, do it in the following order.

1. Remove the handle.
   (See "Removing the Handle" on page 113 for instructions on how to remove the handle.)
2. Install the bracket.
3. Screw on the mounting ring.

   NOTE Tighten the mounting ring to 5.0 N·m [3.688 ft·lbf] or less.

4. Install the handle.
   (See “Installing the Handle” on page 113 for instructions on how to install the handle.)

● **Panel mount**

1. The diameter of the mounting hole in the panel for all sizes of filter regulator is ϕ28.5 mm [1.122 in.].
2. See the following table for the thicknesses of the panels.

mm [in.]

Model	FRZB3□	FRZB4□	FRZB5□
Thickness	3 [0.118] or less	7 [0.276] or less	

NOTE Using panels that are thicker than specified will cause panels to not be securely fastened with the mounting rings or reduce the visibility of the yellow caution ring.

3. To install panel mounts, do it in the following order.
   1. Remove the handle.
      (See "Removing the Handle" on page 113 for instructions on how to remove the handle.)
   2. Install the filter regulator to the panel.
   3. Screw on the mounting ring.

   NOTE Tighten the mounting ring to 5.0 N·m [3.688 ft·lbf] or less.

   4. Install the handle.
      (See "Installing the Handle" on page 113 for instructions on how to install the handle.)

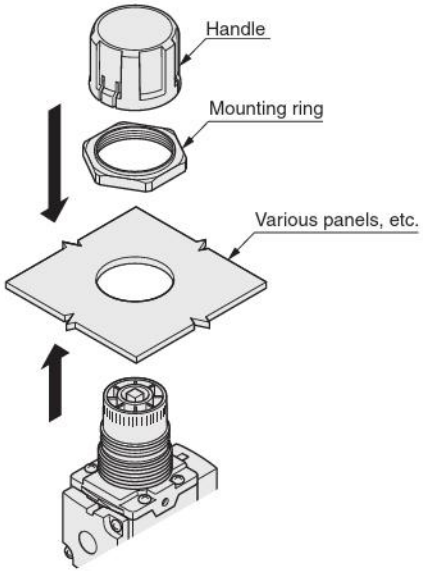

● **Mounting ring**

1. Tighten the mounting ring to 5.0 N·m [3.688 ft·lbf] or less.
2. If you use a tool to tighten the mounting ring, be sure to firmly grip the opposite edges of the mounting ring.

NOTE If the mounting ring is not firmly gripped or too much torque is applied to it, component parts may be damaged.

Operation and maintenance inspections

● **Locking and unlocking the handle**

1. The handles on the filter regulators have a push-lock mechanism.
   Use the procedure shown in the diagram below to lock and unlock the handle.

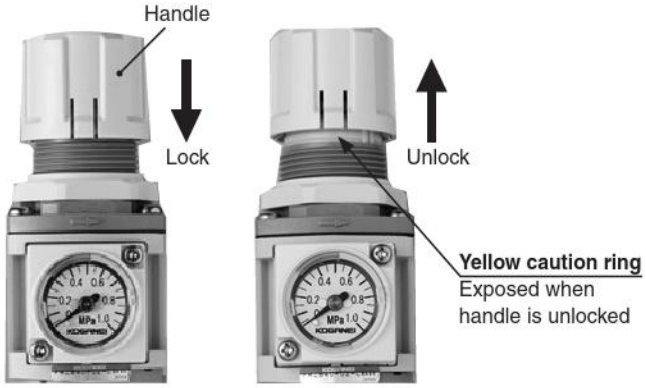

2. The handle must be unlocked to adjust the pressure.

NOTE Turning the handle while it is locked may cause damage to component parts.

3. After adjusting the pressure, lock the handle.

● **Pressure adjustment**

1. To adjust the pressure, turn the handle in the "+" direction as indicated on the bottom of the handle as shown in the diagram below to increase pressure, and turn the handle in the "-" direction to decrease pressure.

NOTE If you turn the handle too far, it may cause damage to internal parts or cause them to stick, making the handle harder to turn.
Be careful not to turn it too far.

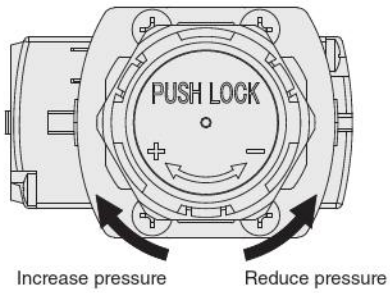

2. When adjusting the pressure, start from the low pressure side and adjust to the desired setting pressure.If you exceed the desired pressure, lower the pressure and then adjust to the desired setting pressure again from the low pressure side.

NOTE If you adjust the pressure to the desired setting from the high pressure side, it may cause the pressure on the OUT port (secondary) side to become unstable.

3. When adjusting the pressure, check the pressure on the IN port (primary) side and OUT port (secondary) side using a pressure gauge or other device.
4. Even though the handle can be turned to the "+" side maximum value, which increases the pressure beyond the upper limit of the operating pressure range, you need to keep the pressure within the operating pressure range while you adjust it.

● **Removing the handle**

To remove the handle, do it in the following order.

1. Unlock the handle.
   (See "Locking and unlocking the handle" on page 112 for instructions on how to lock/unlock the handle.)
2. Turn the mounting ring counterclockwise (in the direction of the arrow in the figure below).

   NOTE Turn the mounting ring until it comes off the threads.

3. Pull the mounting ring towards the handle.

   NOTE Pull the release sleeve of the mounting ring until it pushes open the claws (3 positions) on the handle.

4. Pull off the handle and mounting ring together.

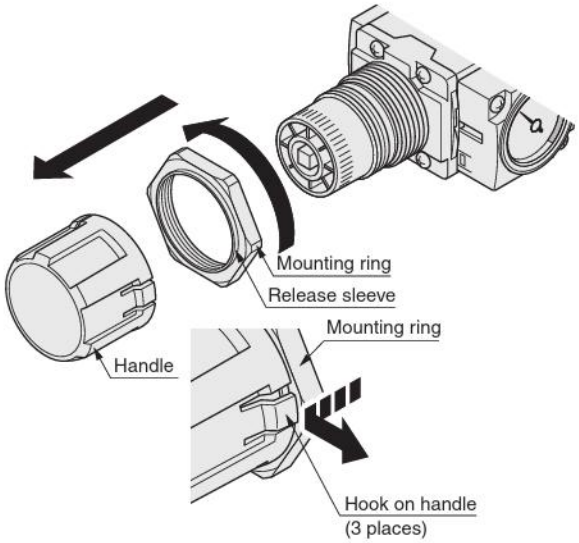

● **Installing the handle**

1. To install the handle, do it in the following order.

1. Release the pressure on the IN port (primary) side to atmosphere.
2. Screw on the mounting ring.

   NOTE Installing the handle before screwing in the mounting ring will cause the mounting ring to become unattachable or the handle to become difficult to remove.

3. Push the handle in until the yellow caution ring is no longer visible.

   NOTE Before pushing the handle in, align the □ shape on the adjusting assembly (see exploded view on page 116) with the □ hole shape on the bottom of the handle.

2. If the handle is attached while pressure is supplied to the IN port (primary) side of the filter regulator, the OUT port (secondary) side pressure may temporarily increase.
If a temporary increase in the OUT port (secondary) side pressure can cause damage or malfunction of the OUT port (secondary) side equipment or devices, be sure to release the IN port (primary) side pressure to the atmosphere before attaching the handle.

NOTE Doing so can damage the product or injure workers or operators.

3. Before attaching the handle, check that the temporary increase in pressure on the OUT port (secondary) side will not affect equipment and devices downline if the pressure on the IN port (primary) side cannot be released to the atmosphere.

● **Replacing the □30 [1.181] integrated pressure gauge and pressure port plate**

1. When interchanging a □30 [1.181] integrated pressure gauge or pressure port plate, be sure to release the pressure inside the product before you start.

2. When interchanging a □30 [1.181] integrated pressure gauge or a pressure port plate, do it in the following order.

1. Remove the two small retaining screws.
2. Remove any metal chips from the female threads, such as by using an air blower.

   NOTE If there are any metal chips left, they can damage the screw threads or the metal chips might stick to the O-ring, causing air to leak.

3. Install the O-ring on the □30 [1.181] integrated pressure gauge or pressure port plate.

   NOTE Not assembling the O-ring will result in air leaks.

4. Align the notches on the □30 [1.181] integrated pressure gauge or the pressure gauge port plate with the protrusions on the main unit to assemble them.
5. Tighten the two small retaining screws to a torque of 0.9 to 1.1 N·m [7.966 to 9.736 in·lbf].

   NOTE Tightening to a torque that exceeds the specified value can cause the screw head or bit to break or damage the component parts. Tightening to a torque that is less than the specified value might allow the screws to loosen and let air leak out.

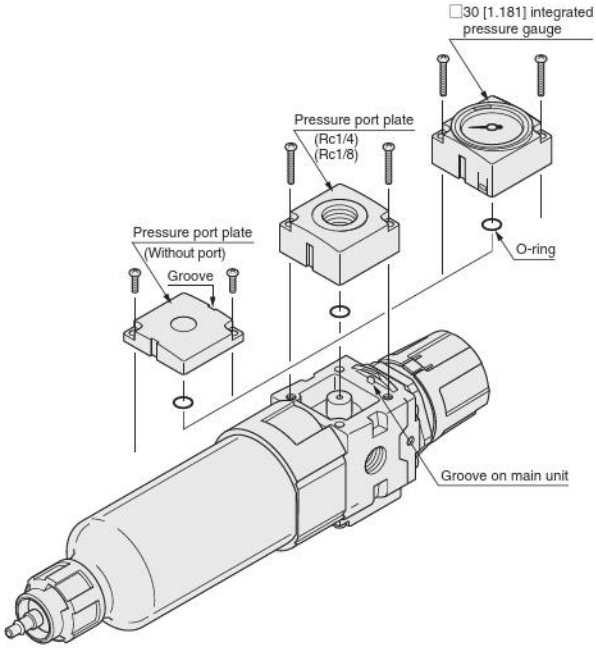

● **Drain cock operation**

1. Turn the drain cock with your hand.

2. Use the following procedure to operate the drain cock.

1. Turn the drain cock in the direction of [O].
2. After the moisture and fluid have drained out, turn the drain cock in the direction of [S] until it clicks and locks.

3. Do not turn the drain cock more than 100° from the closed position, when you open it.

NOTE Turning the drain cock more than 100° may damage it.

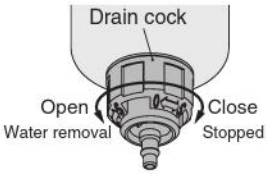

● Processing moisture and fluid

1. If the regulator you are using has no auto drain (**-N**), be sure to drain the moisture and fluid before the water volume reaches the level shown in the left side diagram below.

   NOTE If the volume of moisture and fluid is greater than that shown in the left side diagram below, the moisture and fluid removal function will be greatly reduced.

2. If the regulator you are using has an auto drain (**-A** or **-C**), the moisture and fluid that collects on the primary side is flushed all at once, do not let it exceed the maximum level as shown in the right-side diagram below.

   NOTE The auto drain may malfunction if the volume of moisture and fluid exceeds the maximum level as shown in the right-side diagram below.

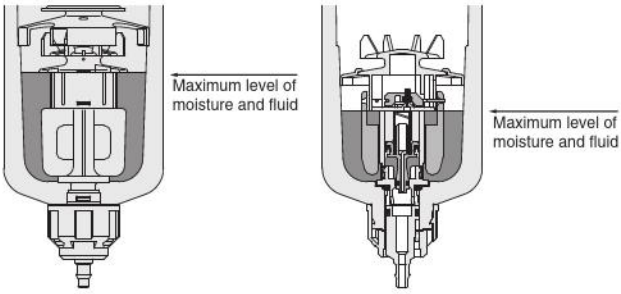

For **-N** For **-A -C**

3. See page 117 "Principles of auto drain operation" regarding the auto drain operation principles.
4. A tube with an inner diameter of ϕ4 mm [0.157 in.] can be attached to the barbed fitting of the drain cock. Make sure the drain cock is closed (locked) before attaching the tube.
5. Cut the end of the tube to be connected to the barbed fitting of the drain cock straight across, and the barbed fitting must be inserted completely as shown in the diagram.
   Also, after installing the tube, lightly pull on it to check that it does not come off.
6. Do not allow the tube on the barbed fitting of the drain cock to become severely bent or twisted close to the fitting.

   NOTE Lateral force may damage the barbed fitting.

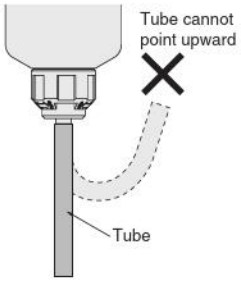

● Attaching and removing the bowl assembly

1. Be sure to release any pressure in the system before attaching (or removing) the bowl assembly.
2. Use the procedure shown in the diagram above on the right to attach (or remove) the bowl assembly.
3. Squeeze the guard button to attach or remove the bowl assembly.

   NOTE If there is a bowl guard, it may fall off when you squeeze it.

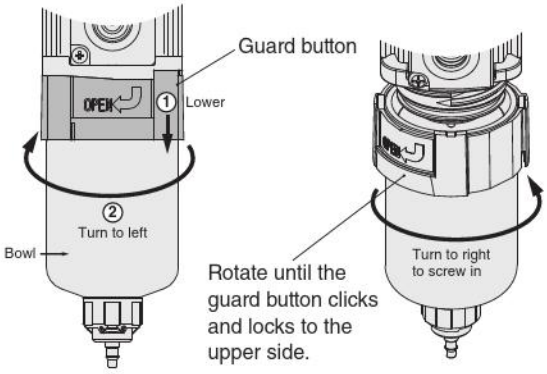

4. When attaching or removing the bowl assembly, move it vertically so you do not touch the internal component parts.

● Attaching and removing the bowl guard

1. Be sure to release any pressure in the system before attaching or removing the bowl guard.
2. Use the procedure shown in the diagram below to attach (or remove) the bowl guard.

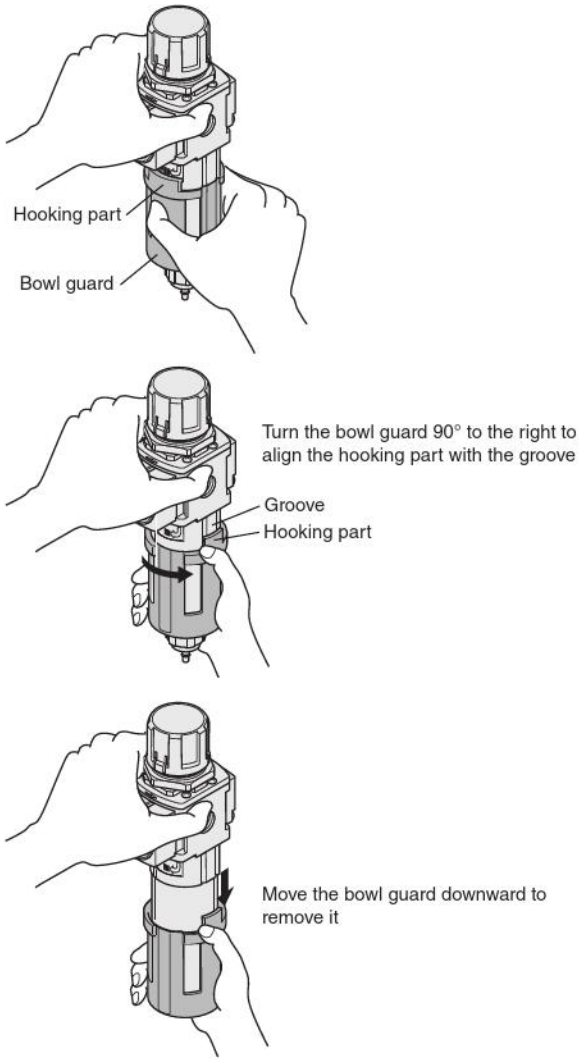

3. Use the reverse of the procedure shown in the diagram above to attach the bowl guard.

● Installing included options

1. Be sure to release any pressure in the system before attaching (or removing) the various pressure gauges and other things.
2. When attaching the various pressure gauges and other things, be sure to tighten them by using a tightening tool on the square or hexagonal parts of the ports.

NOTE Holding the main body of the various pressure gauges as you tighten them can cause damage to their component parts.

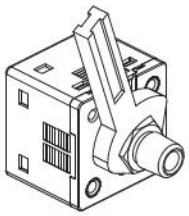

3. When mounting the various pressure gauges to a pressure port plate with Rc1/8 or Rc1/4, tighten them to 3.0 to 5.0 N·m [2.213 to 3.688 ft·lbf].

NOTE Tightening to a torque that exceeds the specified value can cause damage to the component parts. Tightening to a torque that is less than the specified value might allow the screws to loosen and let air leak out.

4. The female threaded part of the pressure port plate with Rc1/8 or Rc1/4 has a stopper.

NOTE Tightening it more after it hits the stopper, can cause damage to the component parts.

● Replacing the pressure port plate, handle, mounting ring

1. To replace the pressure port plate, see "Replacing the □30 [1.181] integrated pressure gauge and pressure port plate" on page 113.
2. To replace the handle and mounting ring, see "Removing the handle" and "Installing the handle" on page 113.

● Replacing the seal kit, element, and bowl assembly

1. To replace the seal kit, element, and bowl assembly, remove the filter regulator and do the work on a work table.
2. Apply grease to the seal materials, such as the O-rings (but not the diaphragm) that are used on the filter regulator.
3. Contact the nearest Koganei sales office or overseas department if you are considering re-applying grease to the O-rings. Recommended grease: Lithium soap base No. 2 equivalent
4. Periodically replace the element of the filter regulator.

NOTE The service life of the element varies depending on the quality of air supplied to the IN port (primary) side. If the air supplied to the IN port (primary) side is highly contaminated with foreign matter, install a prefilter on the IN port (primary) side or change the air filter frequently. As a guideline, the replacement time for the element is one year after starting to use it.

5. The bowl assembly for the FRZB filter regulator (with moisture and fluid removal functions) and the bowl assembly for the FRZ filter regulator (without moisture and fluid removal functions) cannot be interchanged.

NOTE The internal components differ, so the product specifications are not compliant.

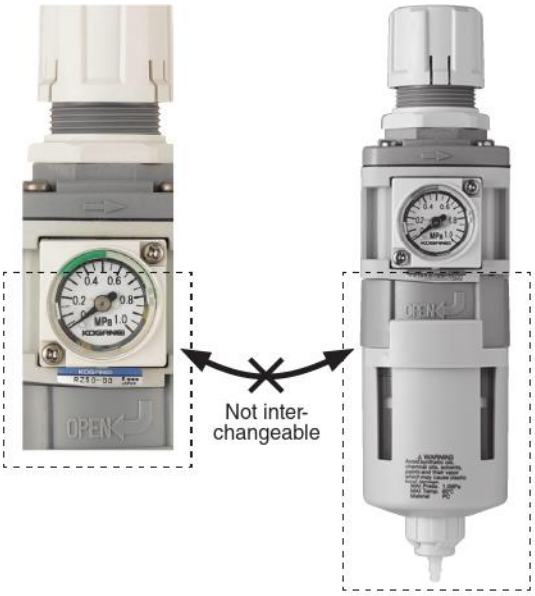

FRZ
Filter regulator
(**FRZ3□·FRZ4□·FRZ5□**)

FRZB
Filter regulator
(**FRZB3□·FRZB4□·FRZB5□**)

6. Do periodic inspections to look for cracks, scratches, or other deterioration in the clear plastic parts of the bowl assembly. If you detect any cracks, scratches, or other deterioration, immediately stop operations and replace the bowl assembly with a new one.

NOTE Cracks, scratches, or other deterioration may cause the bowl to break.

7. Replace the bowl assembly with a new one if it becomes dirty or the transparency is reduced. To wash the bowl, use diluted household cleaner to wash it and then rinse it off with water. See the reference materials on page 162 for details about the chemical resistance of the bowl material.
8. When replacing the seal kit, element, and bowl assembly, be careful not to lose component parts.
9. See page 116 to replace the seal kit, element, and bowl assembly.

NOTE Always assemble the component parts correctly.

Bowl side of filter regulator (with moisture removal function)

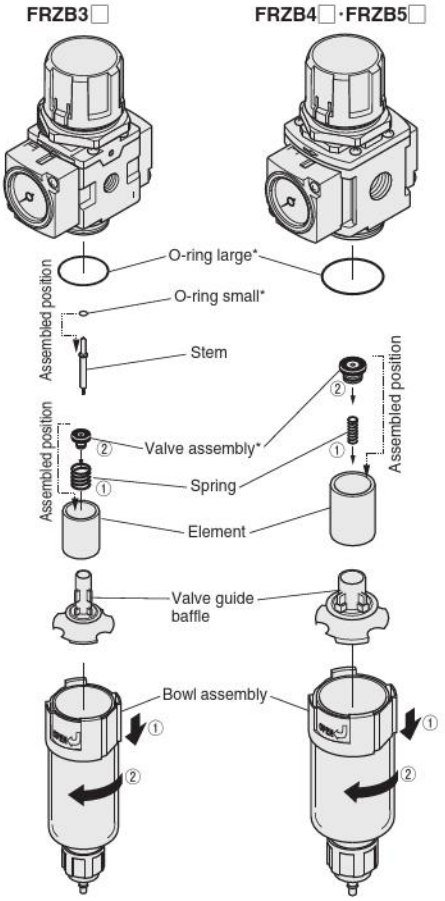

The * mark indicates component parts of the seal kit.

NOTE
- Products that have been disassembled and reassembled are not covered by the warranty.
- Regarding the oil rings in the seal kit, FRZB3□ uses only O-ring (large) and (small), while FRZB4□ and FRZB5□ use only O-ring (large); the remaining O-ring is not used.

Handle side of filter regulator

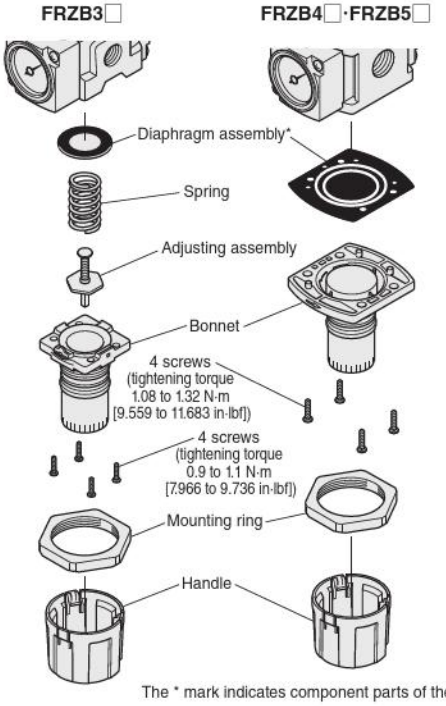

The * mark indicates component parts of the seal kit.

NOTE Products that have been disassembled and reassembled are not covered by the warranty.

□30 [1.181] integrated pressure gauge

Mounting (installation) and piping

● Mounting (installation)

When installing the □30 [1.181] integrated pressure gauge to a filter regulator, refer to "Replacing the □30 [1.181] integrated pressure gauge and pressure port plate" on page 113.

Medium and operating environment

● Pulsation, vibration, impact

The □30 [1.181] integrated pressure gauge is a precision device. It cannot be used if the fluid being used pulsates or if it is subject to vibration or impact from outside.

NOTE Pulsating of the fluid being used, or external vibrations or impacts may result in damage to component parts.

Operation and maintenance inspections

● Adjusting the range of the set pressure

1. Adjust the range of the set pressure (green area) in the following order.
   1. Adjust the lower limit of the set pressure range by rotating the protrusions (2 places) clockwise by hand.
   2. Adjust the upper limit of the set pressure range by rotating the protrusions (2 places) counterclockwise by hand.

NOTE Adjusting the set pressure range with tools, etc. can damage the component parts.

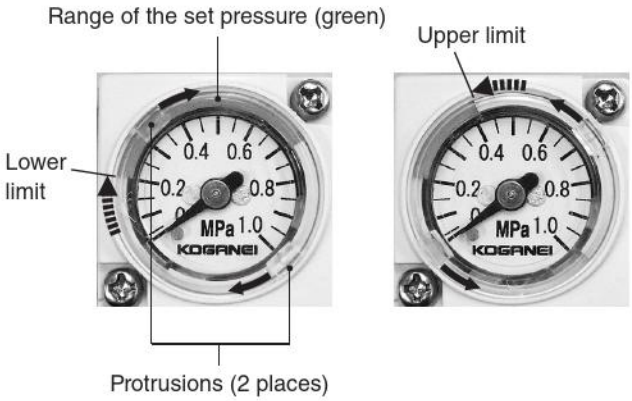

See page 154 for the specifications and dimension diagrams for the □30 [1.181] integrated pressure gauge.

● Explanation of operation of auto drain system

State \ Type	NO type	NC type
Not pressurized	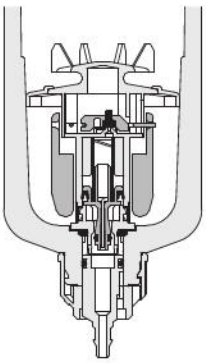 Open When unpressurized, the water outlet opens and the water drains naturally.	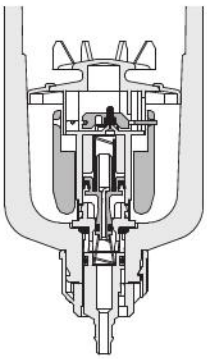 Close When unpressurized, the water outlet closes and the water cannot drain. Note: Water does not drain when unpressurized, if there is a lot of water even in an unpressurized (low pressure) condition, it may be necessary to drain the water by hand.
Pressurized	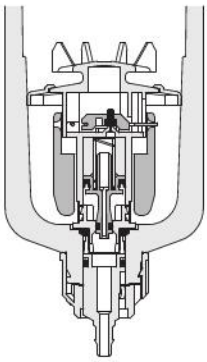 Close Air and water are periodically discharged from the water outlet until the minimum operating pressure (0.15 MPa [22 psi]) or higher is reached. The air and water will stop after the minimum operating pressure or more is reached. Note: A compressor with a small output may not reach full pressure, and there may be air output until the minimum operating pressure or higher is reached.	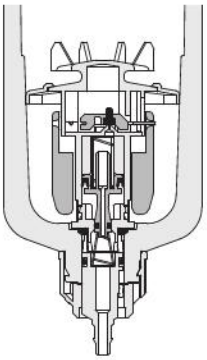 Close In the same way, when unpressurized, the water outlet closes and the water cannot drain.
Draining water	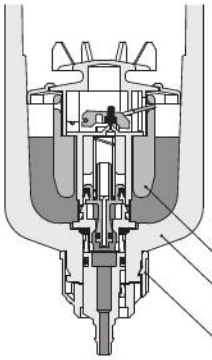 Open Float Bowl Drain knob When the level of water in the bowl reaches a specified level, the float lifts and the water automatically drains. Note: Water can be drained manually by turning the drain knob to the left. See page 113 for details.	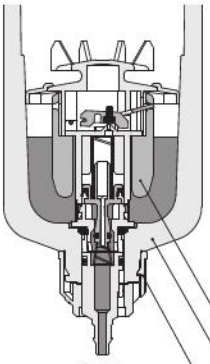 Open Float Bowl Drain knob When the level of water in the bowl reaches a specified level, the float lifts and the water automatically drains. Note 1: Supply pressure is needed to operate the auto drain. Ensure that the supply pressure is 0.15 MPa [22 psi] or more. 2: Water can be drained manually by turning the drain knob to the left. See page 113 for details.
Draining water completed	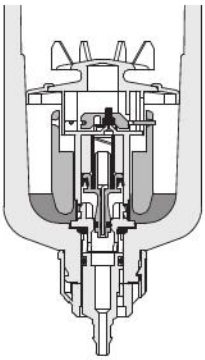 Close When the water drains, the float lowers and the water outlet closes, and water stops draining.	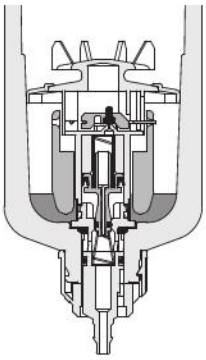 Close When the water drains, the float lowers and the water outlet closes, and water stops draining.

● Principles of moisture and fluid removal

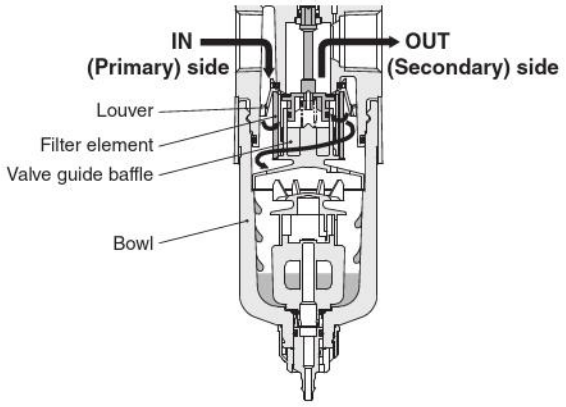

1. The swirling flow generated by the louvers separates moisture and fluid from the air supplied from the IN port (primary) side.
2. The separated moisture and fluid pass through the gap in the valve guide baffle and collect in the bowl.
3. The air, from which the moisture and fluid have been separated, passes through the filter element to the OUT port (secondary).

FRZ Series
Filter regulator, regulator

Perfect on lines following the removal of moisture and fluids!

Specialized **30 series** for standalone applications

Regulator RZ30 | Filter regulator FRZ30

The **40 and 50 series** can be used in combinations

Regulator RZ40 | Filter regulator FRZ40 | Regulator RZ50 | Filter regulator FRZ50

Downsizing	Improved flow rate characteristics allow a smaller configuration (close side-by-side spacing possible).
Mounts in any direction	Elimination of fluid removal function for greater mounting direction freedom.
Improved operability and maintainability	Handle operability improved and bowl is easy to attach/remove.
Pressure gauge, pressure switch	Compatible with □30 [1.181] integrated pressure gauge, other types of pressure gauges, and pressure switches.
Compatible in a wide range of environments	Specifications for ozone resistance, NCU specifications (copper free)[Note] compatible as standard.

Note: Excluding pressure switch and pressure gauge options.

Compact design

Improved flow rate characteristics allow a smaller configuration.

* Comparison between our regulators **R600** and **RZ50**.

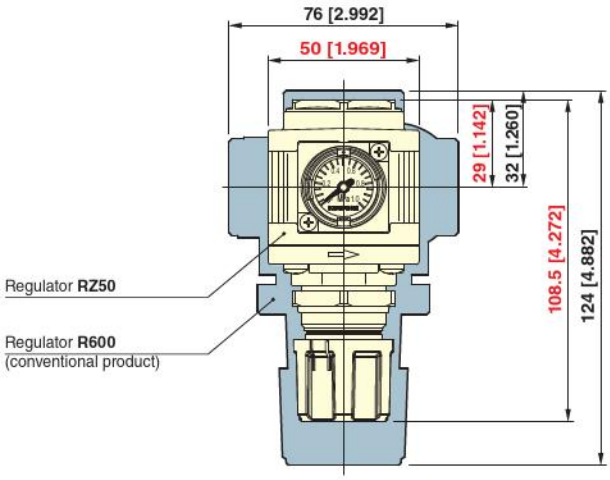

Improved handle operability

- The shape and size of the easy-to-operate handle make it light and smooth to turn. In addition, improving the resolution of the handle lock has reduced fluctuations in the set pressure when the handle is locked.
- The caution ring (yellow) allows you to check the state of the handle's lock as it is released.

Mounting ring

Yellow caution ring
Exposed as handle is unlocked

Handle
The handle can be removed by using the mounting ring.
This is useful for preventing the handle from being operated.

Improved maintainability

- The bowl can be removed and attached in two easy steps. Filter elements can be easily replaced even in restricted maintenance spaces.
- Filter elements are nonwoven fabric filter elements. Increased porosity and circumferential area increase service life.

Element

Bowl

Improved freedom in mounting direction

Eliminated moisture and fluid removal function for greater mounting direction freedom. Mounting with the bowl part on the top or side is also possible.

Filter regulator
FRZ40

□30 [1.181] integrated pressure gauge

- □30 [1.181] integrated pressure gauge is compact with minimal protrusions. Plus, the easy-to-read display angle of 270° improves visibility.

Swing angle 270°

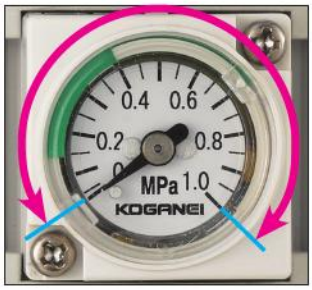

- The set pressure range (green area) can be changed as desired. The upper and lower limits of the setting range can be freely changed without removing the front cover (transparent resin part) or using tools.

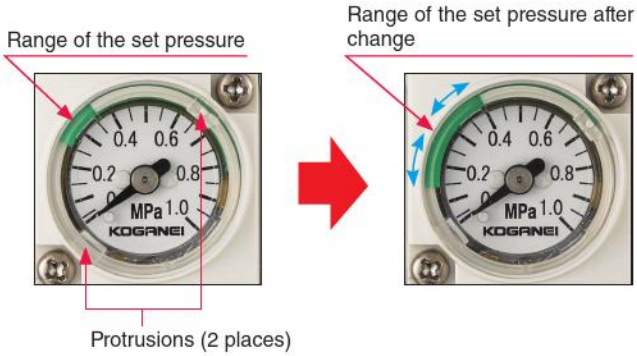

By rotating the protrusions (two locations) clockwise or counterclockwise, the display of the set pressure range can be changed as desired.

* Other pressure gauges and pressure switches are also available. For details, see the next page.

Pressure gauge, pressure switch

Various pressure gauges and pressure switches can be selected in addition to the □30 [1.181] integrated pressure gauge.

ϕ40 [1.575] pressure gauge
(1 MPa [145 psi] specifications)

ϕ40 [1.575] pressure gauge
(0.3 MPa [44 psi] specifications)

ϕ40 [1.575] stainless steel bourdon tube pressure gauge
(1 MPa [145 psi] specifications)

ϕ40 [1.575] stainless steel bourdon tube pressure gauge
(0.3 MPa [44 psi] specifications)

Digital pressure switch
GS620
(1 MPa [145 psi] specifications)

Pressure gauge with built-in switch
(1 MPa [145 psi] specifications)

Pressure switch module

Easily detect line pressure with this compact pressure switch with integrated connection fitting. Plus, the set pressure can be adjusted from the front. For details, refer to page 144.

Note: Cannot be assembled to body size 30 series.

Residual pressure exhaust valve

Pressure in line can be exhausted by using a 3-port valve. The structure allows you to lock (with a keyhole) the valve in the residual pressure exhaust state, improving safety. In addition, the operation handle is a highly visible red handle. For details, refer to page 141.

Note: Cannot be assembled to body size 30 series.

Supplying air Exhausting air

Module or adapter

Common to both the 40 and 50 series body sizes, these devices are used for connecting individual products, branch piping, and for variations in pipe sizes.

For details, refer to page 147.

Note: Cannot be assembled to body size 30 series.

F module
(For connector)

D module
(For connecting (with bracket)

T module
(For branch)

DT module
For branching (with bracket)

S adapter
(For pipe size conversion)

DS adapter
(For pipe size conversion, with bracket)

Module bracket
(For various modules and adapters)

Connector plate
(Replacement part)

Bracket

The brackets can be used with all sizes of the filter regulators and regulators.

Panel mount installation

The hole diameter for a panel mount is standardized at ϕ28.5 mm [1.122 in.] for all sizes of filter regulators and regulators.

Filter regulator

FRZ30·FRZ31·FRZ32
FRZ40·FRZ41
FRZ50·FRZ51

Symbols

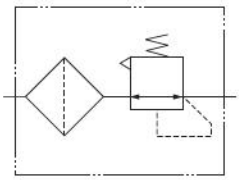

● Standard
● For low pressure

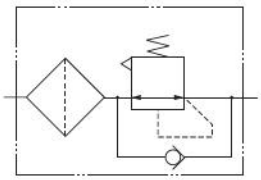

● Built-in check mechanism

Specifications

Item \ Model		Standard	FRZ30	FRZ40	FRZ50
		For low pressure	FRZ31	FRZ41	FRZ51
		Built-in check mechanism	FRZ32	-	-
Media			Air		
Port size			M5×0.8, Rc1/8, Rc1/4	Rc1/8, Rc1/4, Rc3/8	Rc1/4, Rc3/8, Rc1/2
Maximum operating pressure	MPa [psi]		1.0 [145]		
Proof pressure	MPa [psi]		1.5 [218]		
Operating temperature range (atmospheric and medium)	°C [°F]		5 to 60 [41 to 140] (non-condensation)		
Filtration	μm		5		
Pressure regulating system			Direct acting/relief type	Internal pilot/relief type	
Set pressure range	MPa [psi]	Standard/Built-in check mechanism	0.05 to 0.85 [7 to 123]		
		For low pressure	0.05 to 0.40 [7 to 58]		
Relief starting pressure	MPa [psi]		Set pressure +0.05 [7] or less		
Materials used in major parts		Main unit	Die cast aluminum alloy		
		Bonnet & adapter	Polyacetal		
		Diaphragm	Base fabric + synthetic rubber		
		Bowl	Polycarbonate		
		Filter element	Nonwoven fabrics		
		Bracket	Steel plate (electroless nickel plated)		
Weight (for standard specifications and maximum port size)	kg [lb]		0.16 [0.353]	0.20 [0.441]	0.29 [0.639]
Standard equipment			Mounting ring		
Options[Note]			□30 [1.181] integrated pressure gauge (combined), various other pressure gauges (included parts), bracket (included parts)		

Note: See page 151 and onward for individual product specifications or the order code column for details about each option.
Remarks: **FRZ4**□ and **FRZ5**□ are internal pilot types, so the secondary side consumes a small amount of air to adjust pressure.

Order Codes

FRZ □ – □ – □ – □

Filter regulator

Main unit / Port size

Model	M5	Rc1/8	Rc1/4	Rc3/8	Rc1/2	
30	M5	01	02			Standard
40		01	02	03		Standard
50			02	03	04	Standard
31	M5	01	02			For low pressure
41		01	02	03		For low pressure
51			02	03	04	For low pressure
32	M5	01	02			Built-in check mechanism

Pressure gauge specifications

Blank — No pressure gauge (with pressure gauge connection port, Rc1/4)
GP1 — No pressure gauge (with pressure gauge connection port, Rc1/8)
GN — No pressure gauge (no pressure gauge connection port)
G1C — 1 MPa [145 psi] specifications, □30 [1.181] integrated pressure gauge
G4C — 0.4 MPa [58 psi] specifications, □30 [1.181] integrated pressure gauge
G1 — 1 MPa [145 psi] specifications, ϕ40 [1.575] pressure gauge
G3 — 0.3 MPa [44 psi] specifications, ϕ40 [1.575] pressure gauge
G1S — 1 MPa [145 psi] specifications, ϕ40 [1.575] stainless steel bourdon tube pressure gauge
G3S — 0.3 MPa [44 psi] specifications, ϕ40 [1.575] stainless steel bourdon tube pressure gauge
GS6 — 1 MPa [145 psi] specifications, digital pressure switch
GS1A — 1 MPa [145 psi] specifications □50 [1.969] pressure gauge with built-in switch, lead wire system, for 24 VDC
GS1B — 1 MPa [145 psi] specifications □50 [1.969] pressure gauge with built-in switch, lead wire system, for 100 VAC, 200 VAC
GS1C — 1 MPa [145 psi] specifications □50 [1.969] pressure gauge with built-in switch, with DIN system contacts, for 24 VDC
GS1D — 1 MPa [145 psi] specifications □50 [1.969] pressure gauge with built-in switch, DIN system contacts, for 100 VAC, 200 VAC

Note: For specifications of pressure gauges, digital pressure switches, and pressure gauges with switches built in, order codes for individual purchases, and dimensions, see pages 154 to 161.

Bracket
Blank — No bracket
B — With bracket

● Order codes for brackets only

8Z-BK

Order Codes

● Maintenance parts

● Bowl assembly

BA-FRZ□

Body size
30 —— for **FRZ3**□
40 —— for **FRZ4**□
50 —— for **FRZ5**□

● Element

E-□Z

Body size
30 —— for **FRZ3**□
40 —— for **FRZ4**□
50 —— for **FRZ5**□

● Pressure port plate

P-FRZ (no pressure gauge connection port)

With 1 O-ring and 2 small screws

GP-FRZ□ (with pressure gauge connection port)

Port size
Blank —— Rc1/4
1 —— Rc1/8

With 1 O-ring and 2 small screws

● Seal kit (various O-rings, 1 valve assembly, 1 diaphragm assembly)

SRK-FRZ□

Body size
30 —— for **FRZ3**□
40 —— for **FRZ4**□
50 —— for **FRZ5**□

Refer to "Replacing the seal kit, element, and bowl assembly" on page 139 regarding the component parts of the seal kits.

● Handle

H-FRZ

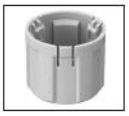

● Mounting ring

R-FRZ

* Compatible brackets (to replace multi-series **FR15□·FR30□·FR60□** filter regulators)

* For details, refer to pages 151 to 153.

8Z-BK□

Body size
30 —— **FR15**□ → replaced by **FRZ3**□
40 —— **FR30**□ → replaced by **FRZ4**□
50 —— **FR60**□ → replaced by **FRZ5**□

Inner construction

FRZ3□

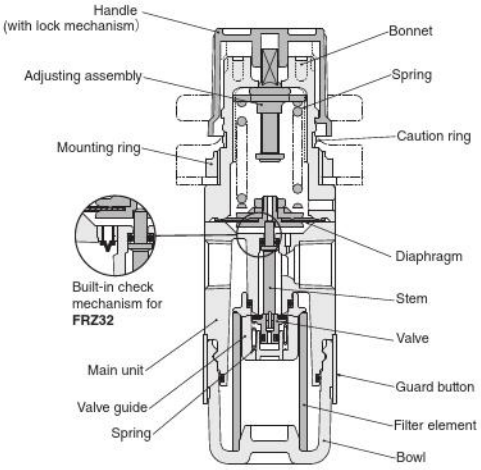

FRZ4□·FRZ5□

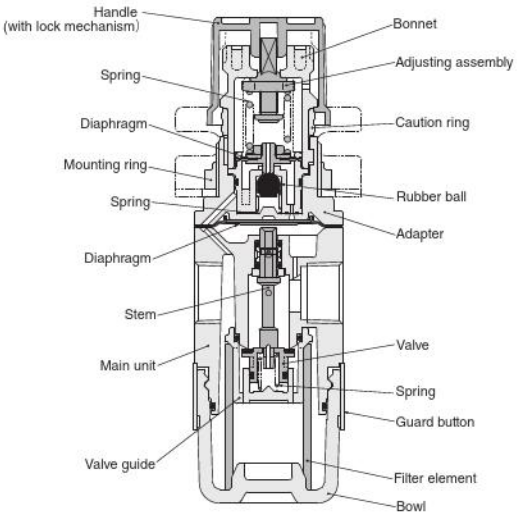

Flow rate characteristics

● Standard/Built-in check mechanism

FRZ30-M5
FRZ32-M5

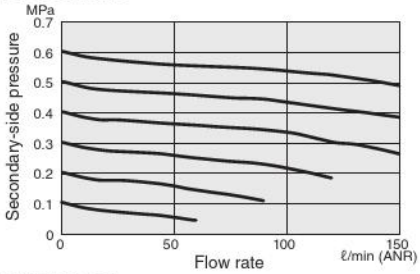

FRZ40-01

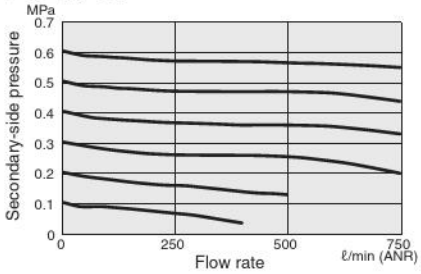

FRZ50-02

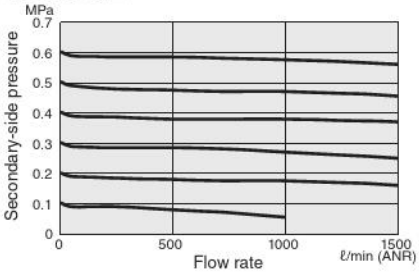

FRZ30-01
FRZ32-01

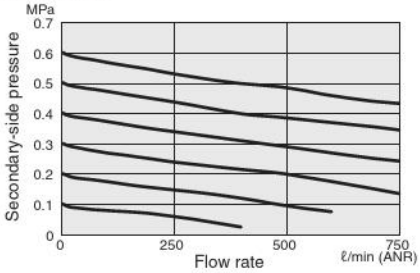

FRZ40-02

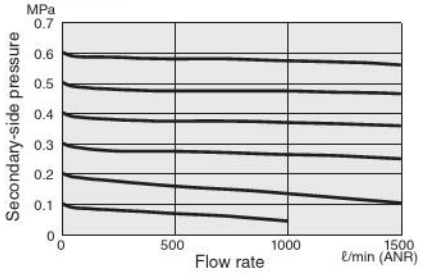

FRZ50-03

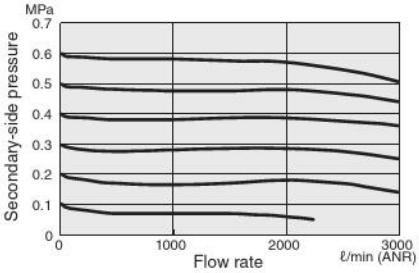

FRZ30-02
FRZ32-02

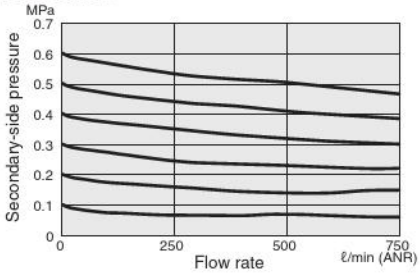

FRZ40-03

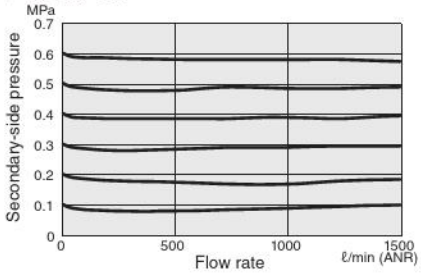

FRZ50-04

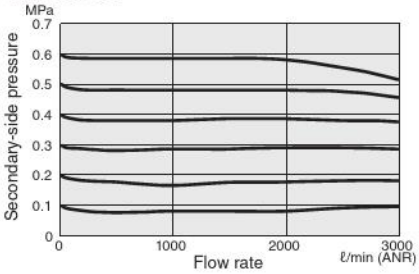

Remarks: Graphs show flow rate characteristics at constant primary-side pressure of 0.7 MPa [102 psi].

Pressure characteristics

● Standard/Built-in check mechanism

FRZ30
FRZ32

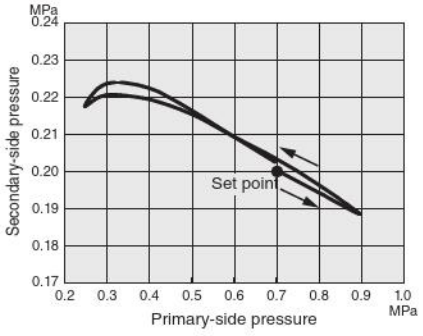

FRZ40

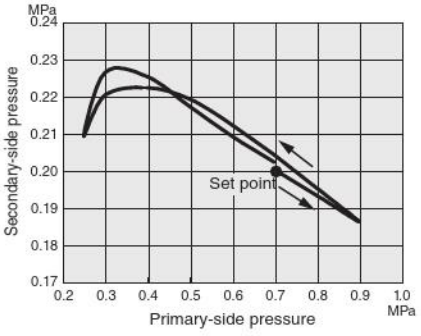

FRZ50

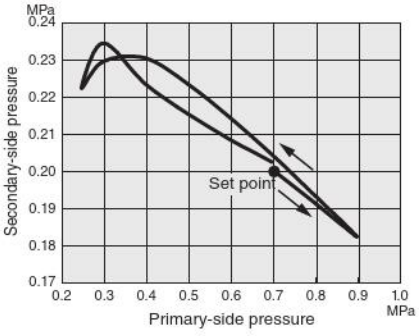

Filter regulator dimensions (mm [in.])

● **FRZ30**
● **FRZ31**
● **FRZ32**

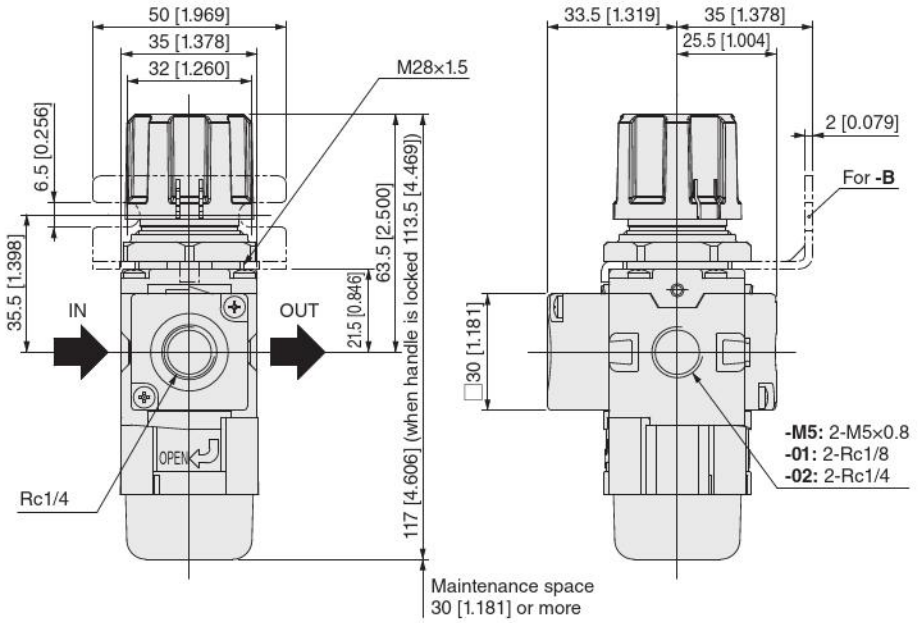

● Pressure gauge option

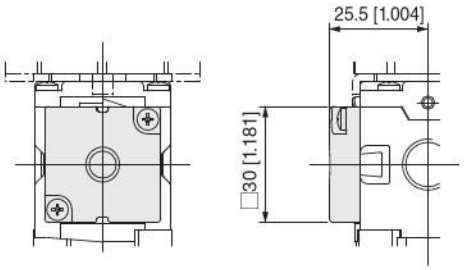

For **-GN**

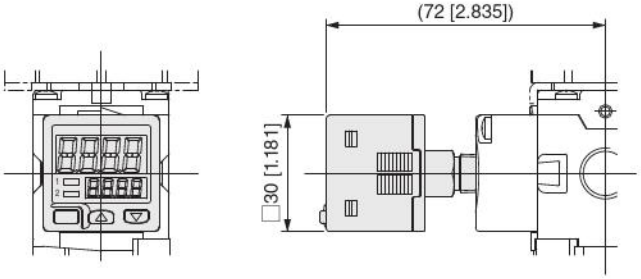

For **-GS6**

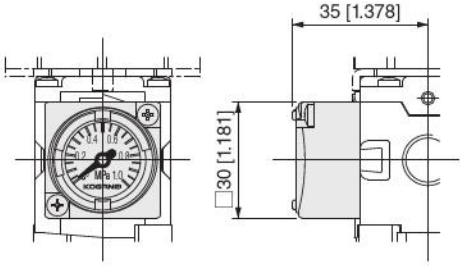

For **-G1C, -G4C**

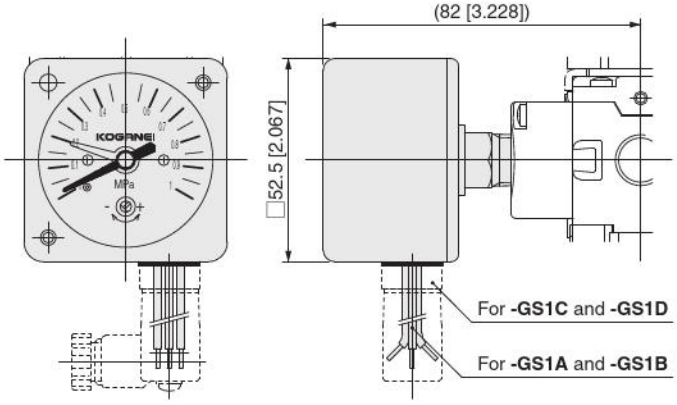

For **-GS1A, -GS1B, -GS1C** and **-GS1D**

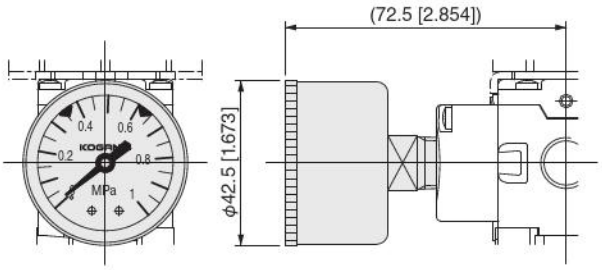

For **-G1, -G3**

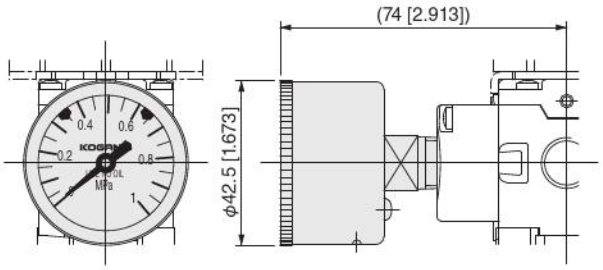

For **-G1S, -G3S**

● FRZ40
● FRZ41

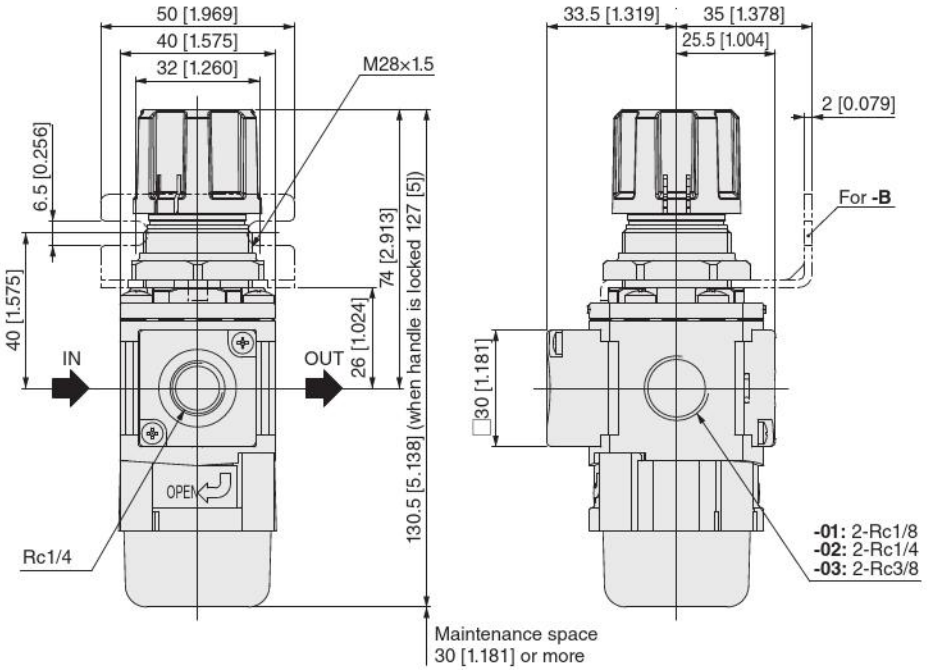

● Pressure gauge option

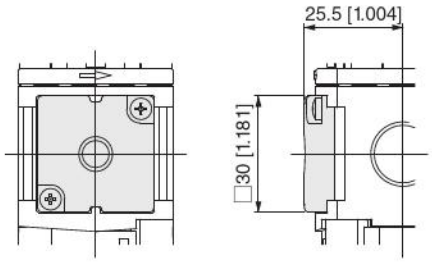

For **-GN**

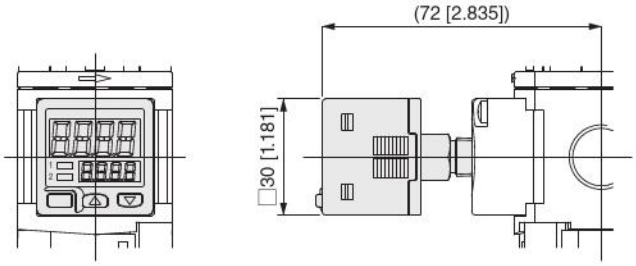

For **-GS6**

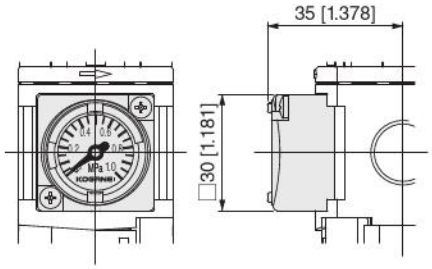

For **-G1C, -G4C**

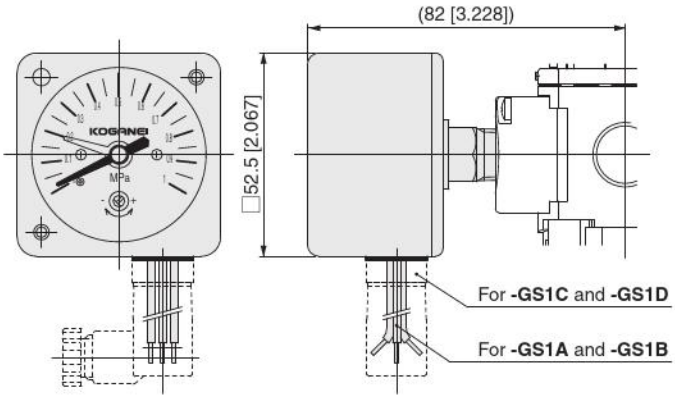

For **-GS1A, -GS1B, -GS1C** and **-GS1D**

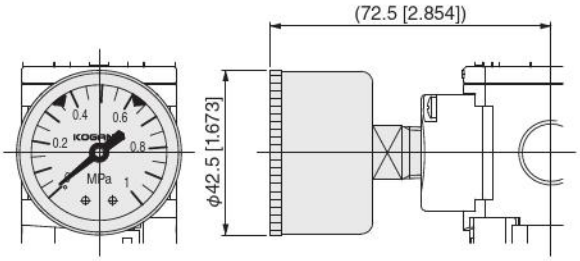

For **-G1, -G3**

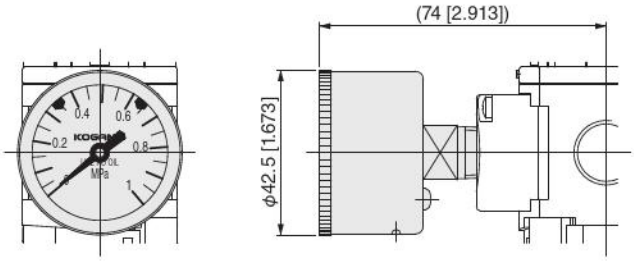

For **-G1S, -G3S**

● **FRZ50**
● **FRZ51**

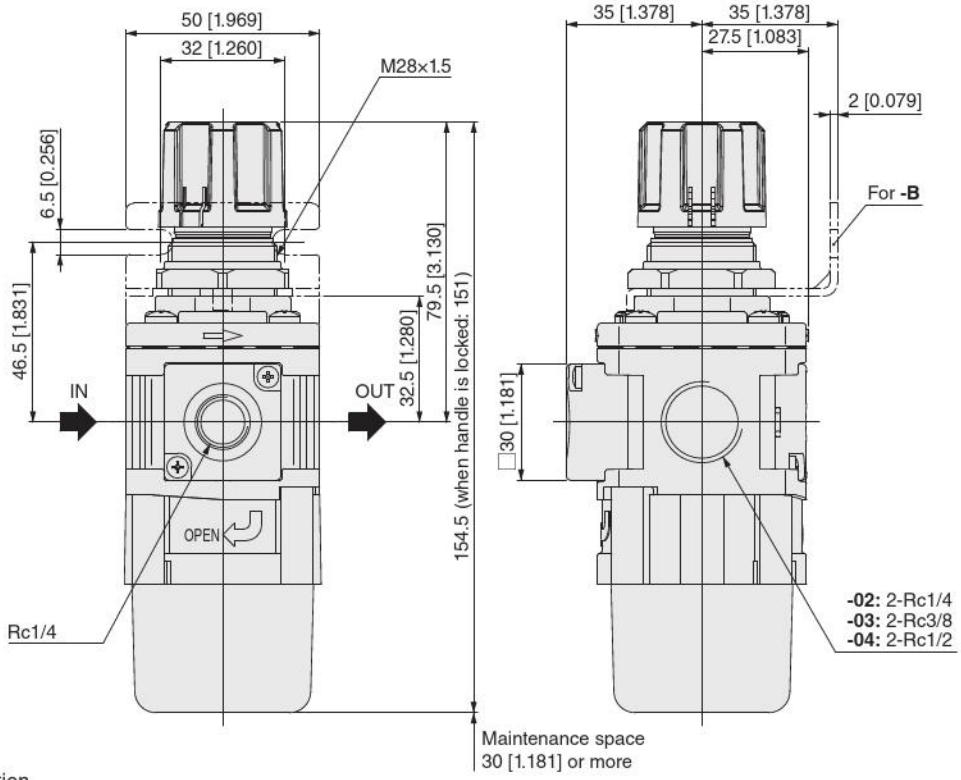

● Pressure gauge option

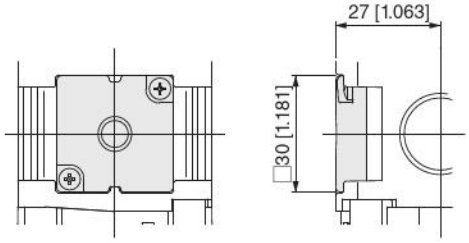

For **-GN**

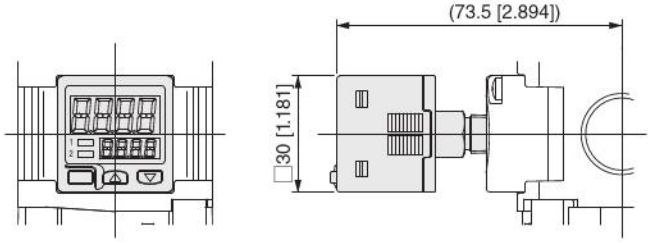

For **-GS6**

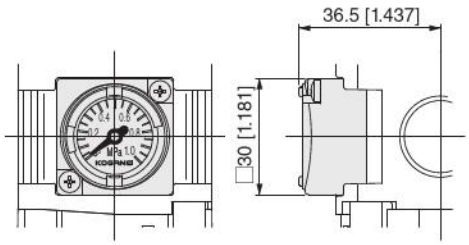

For **-G1C, -G4C**

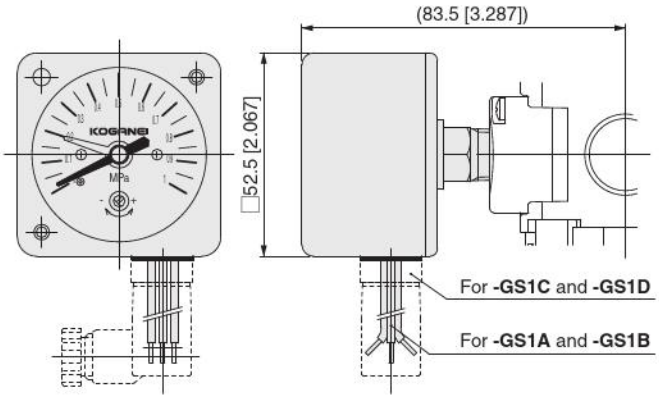

For **-GS1A, -GS1B, -GS1C** and **-GS1D**

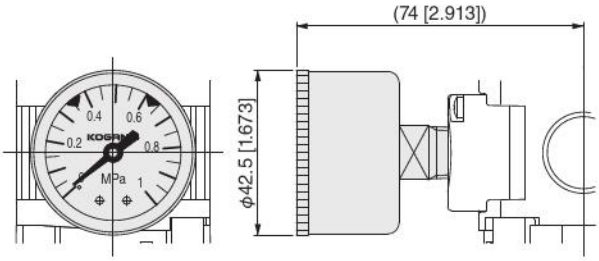

For **-G1, -G3**

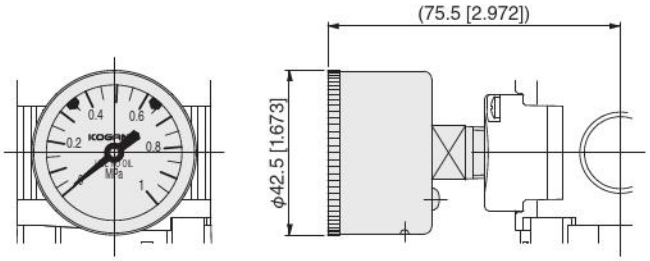

For **-G1S, -G3S**

Regulator

RZ30·RZ31·RZ32
RZ40·RZ41
RZ50·RZ51

Symbols

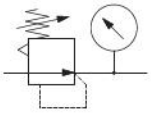

● Standard
● For low pressure

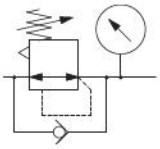

● Built-in check mechanism

Specifications

Item \ Model		Standard	RZ30	RZ40	RZ50
		For low pressure	RZ31	RZ41	RZ51
		Built-in check mechanism	RZ32	-	-
Media			Air		
Port size			M5×0.8, Rc1/8, Rc1/4	Rc1/8, Rc1/4, Rc3/8	Rc1/4, Rc3/8, Rc1/2
Maximum operating pressure MPa [psi]			1.0 [145]		
Proof pressure MPa [psi]			1.5 [218]		
Operating temperature range (atmospheric and medium) °C [°F]			5 to 60 [41 to 140] (non-condensation)		
Pressure regulating system			Direct acting/relief type	Internal pilot/relief type	
Set pressure range MPa [psi]		Standard/Built-in check mechanism	0.05 to 0.85 [7 to 123]		
		For low pressure	0.05 to 0.40 [7 to 58]		
Relief starting pressure MPa [psi]			Set pressure +0.05 [7] or less		
Materials used in major parts		Main unit	Die cast aluminum alloy		
		Bonnet & adapter	Polyacetal		
		Diaphragm	Base fabric + synthetic rubber		
		Bracket	Steel plate (electroless nickel plated)		
Weight (for standard specifications and maximum port size) kg [lb]			0.13 [0.287]	0.17 [0.375]	0.24 [0.529]
Standard equipment			Mounting ring		
Options[Note]			□30 [1.181] integrated pressure gauge (combined), various other pressure gauges (included parts), bracket (included parts)		

Note: See page 151 and onward for individual product specifications or the order code column for details about each option.
Remarks: **RZ4**□ and **RZ5**□ are internal pilot types, so the secondary side consumes a small amount of air to adjust pressure.

Order Codes

RZ □ – □ – □ – □

Regulator

Main unit / Port size

Model	M5	Rc1/8	Rc1/4	Rc3/8	Rc1/2	
30	M5	01	02			Standard
40		01	02	03		Standard
50			02	03	04	Standard
31	M5	01	02			For low pressure
41		01	02	03		For low pressure
51			02	03	04	For low pressure
32	M5	01	02			Built-in check mechanism

Pressure gauge specifications

Blank — No pressure gauge (with pressure gauge connection port, Rc1/4)
GP1 — No pressure gauge (with pressure gauge connection port, Rc1/8)
GN — No pressure gauge (no pressure gauge connection port)
G1C — 1 MPa [145 psi] specifications, □30 [1.181] integrated pressure gauge
G4C — 0.4 MPa [58 psi] specifications, □30 [1.181] integrated pressure gauge
G1 — 1 MPa [145 psi] specifications, ϕ40 [1.575] pressure gauge
G3 — 0.3 MPa [44 psi] specifications, ϕ40 [1.575] pressure gauge
G1S — 1 MPa [145 psi] specifications, ϕ40 [1.575] stainless steel bourdon tube pressure gauge
G3S — 0.3 MPa [44 psi] specifications, ϕ40 [1.575] stainless steel bourdon tube pressure gauge
GS6 — 1 MPa [145 psi] specifications, digital pressure switch
GS1A — 1 MPa [145 psi] specifications □50 [1.969] pressure gauge with built-in switch, lead wire system, for 24 VDC
GS1B — 1 MPa [145 psi] specifications □50 [1.969] pressure gauge with built-in switch, lead wire system, for 100 VAC, 200 VAC
GS1C — 1 MPa [145 psi] specifications □50 [1.969] pressure gauge with built-in switch, with DIN system contacts, for 24 VDC
GS1D — 1 MPa [145 psi] specifications □50 [1.969] pressure gauge with built-in switch, DIN system contacts, for 100 VAC, 200 VAC

Note: For specifications of pressure gauges, digital pressure switches, and pressure gauges with switches built in, order codes for individual purchases, and dimensions, see pages 154 to 161.

Bracket
Blank — No bracket
B — With bracket

● Order codes for brackets only

8Z-BK

Order Codes

● Maintenance parts

● Seal kit (various O-rings, 1 valve assembly, 1 diaphragm assembly)

SRK-RZ□

Body size
30 —— for **RZ3□**
40 —— for **RZ4□**
50 —— for **RZ5□**

Refer to "Replacing the seal kit, element, and bowl assembly" on page 139 regarding the component parts of the seal kits.

● Pressure port plate

P-FRZ (no pressure gauge connection port)

With 1 O-ring and
2 small screws

GP-FRZ□ (with pressure gauge connection port)

Port size
Blank —— Rc1/4
1 —— Rc1/8

With 1 O-ring and
2 small screws

● Handle

H-FRZ

● Mounting ring

R-FRZ

* Compatible brackets (to replace multi-series **R15□·R30□·R60□** regulators)

* For details, refer to pages 151 to 153.

8Z-BK□

Body size
30 —— **R15□** → replaced by **RZ3□**
40 —— **R30□** → replaced by **RZ4□**
50 —— **R60□** → replaced by **RZ5□**

Inner construction

RZ3□

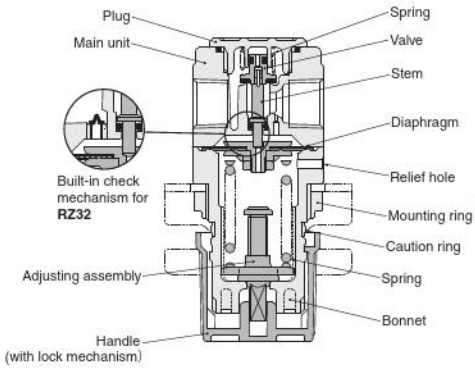

RZ4□·RZ5□

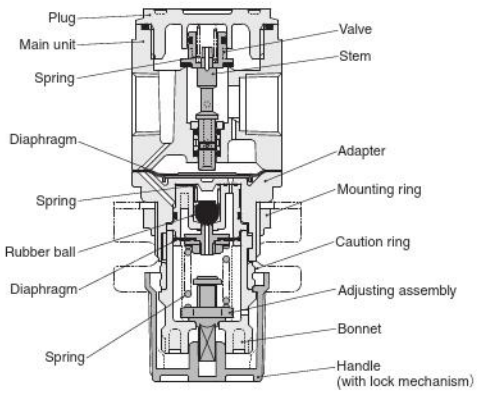

Flow rate characteristics

● Standard/Built-in check mechanism

RZ30-M5
RZ32-M5

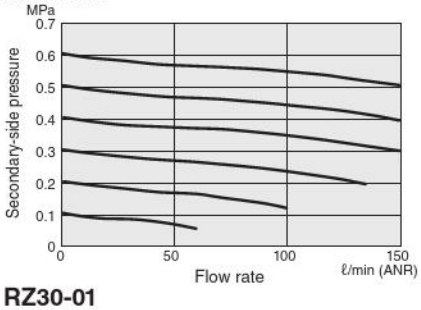

RZ40-01

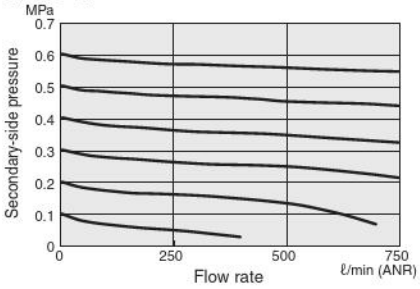

RZ50-02

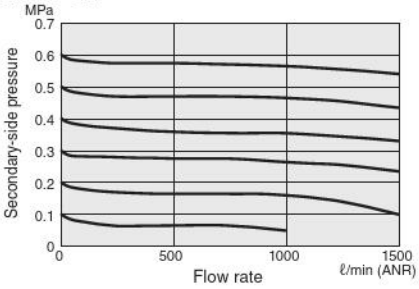

RZ30-01
RZ32-01

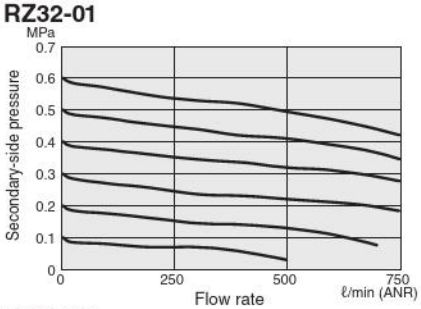

RZ40-02

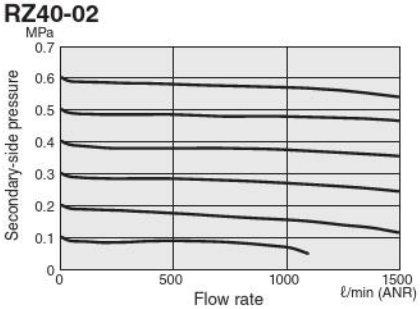

RZ50-03

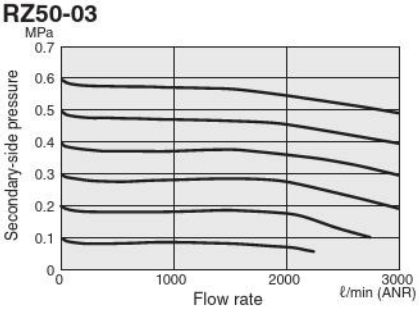

RZ30-02
RZ32-02

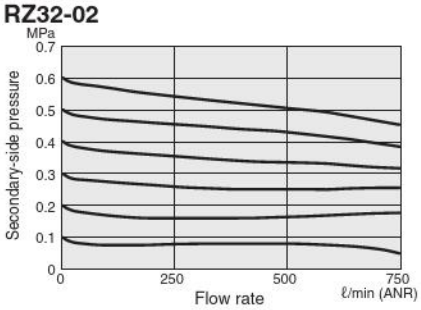

RZ40-03

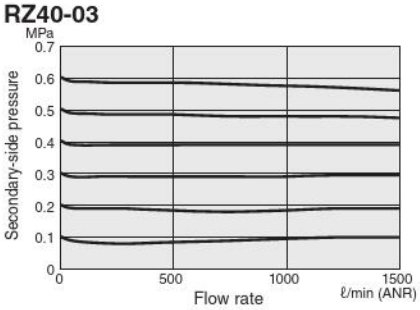

RZ50-04

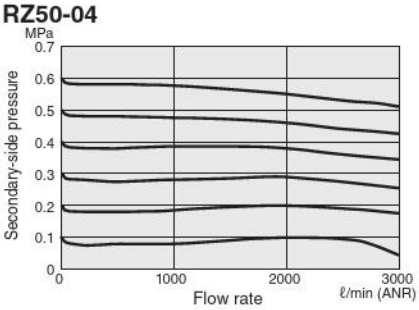

Remarks: Graphs show flow rate characteristics at constant primary-side pressure of 0.7 MPa [102 psi].

Pressure characteristics

● Standard/Built-in check mechanism

RZ30
RZ32

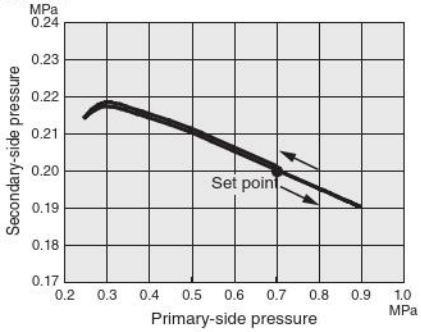

RZ40

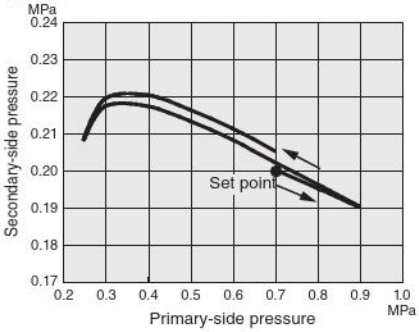

RZ50

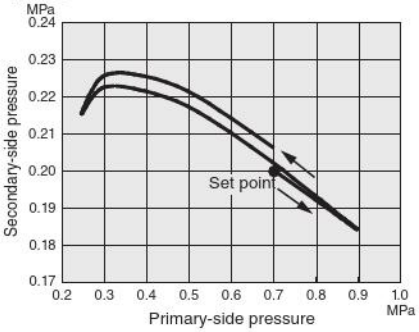

● **RZ30**
● **RZ31**
● **RZ32**

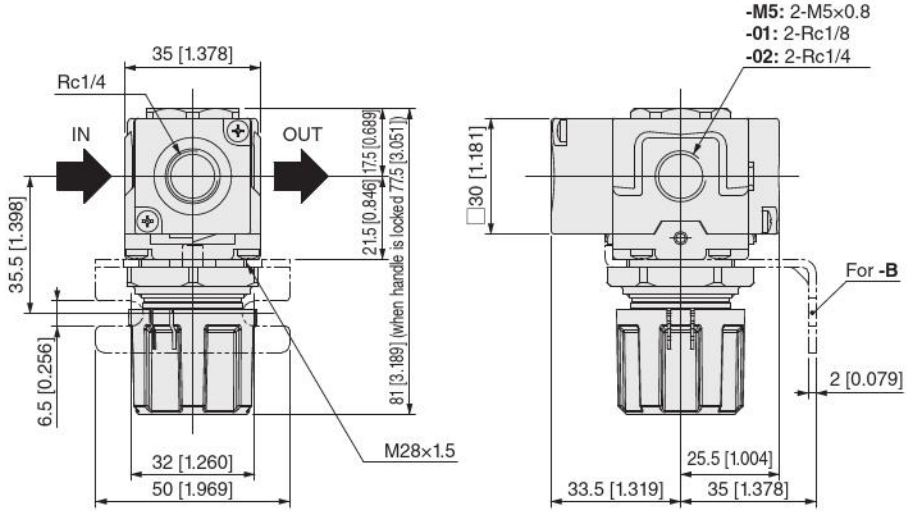

● Pressure gauge option

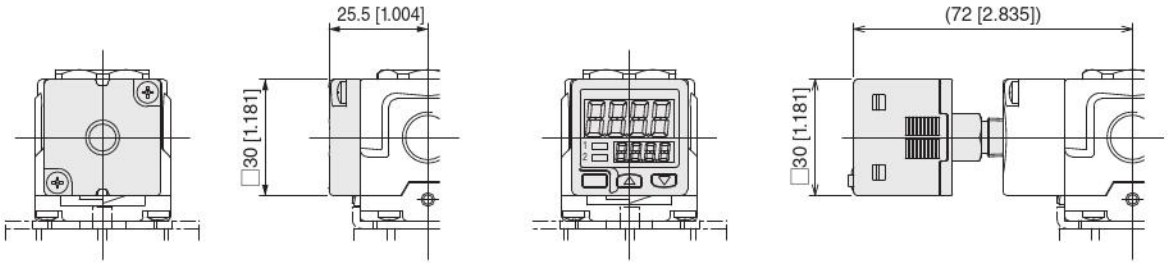

For **-GN**

For **-GS6**

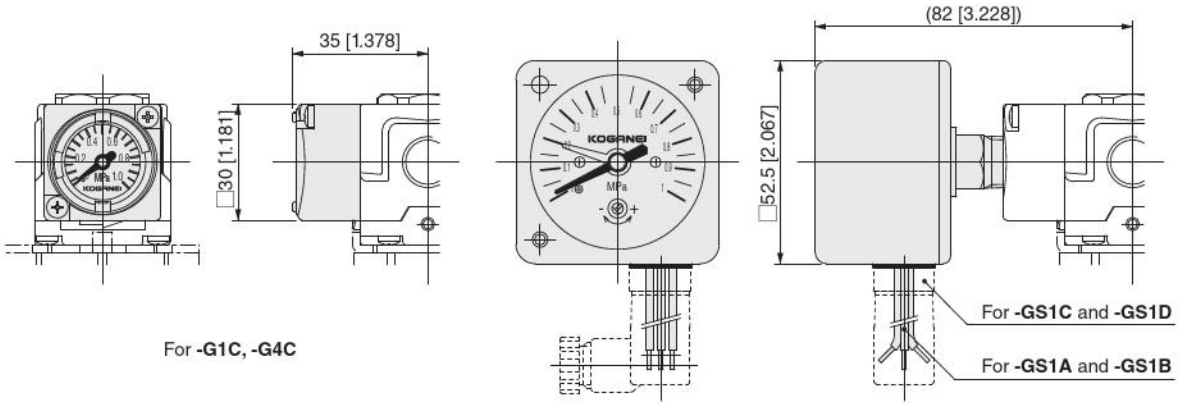

For **-G1C, -G4C**

For **-GS1A, -GS1B, -GS1C** and **-GS1D**

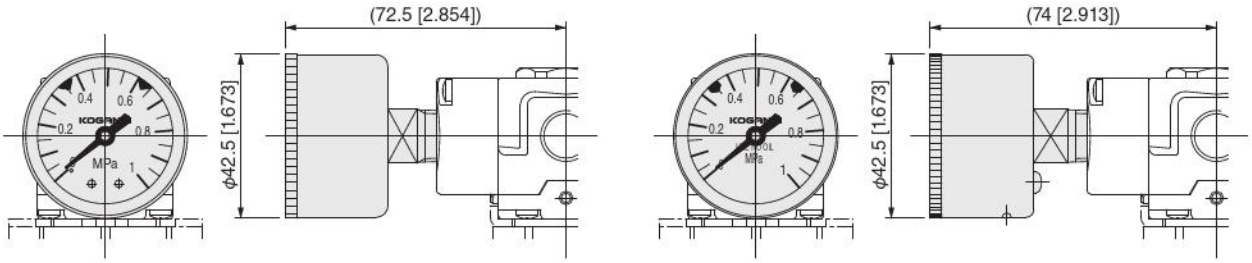

For **-G1, -G3**

For **-G1S, -G3S**

● RZ40
● RZ41

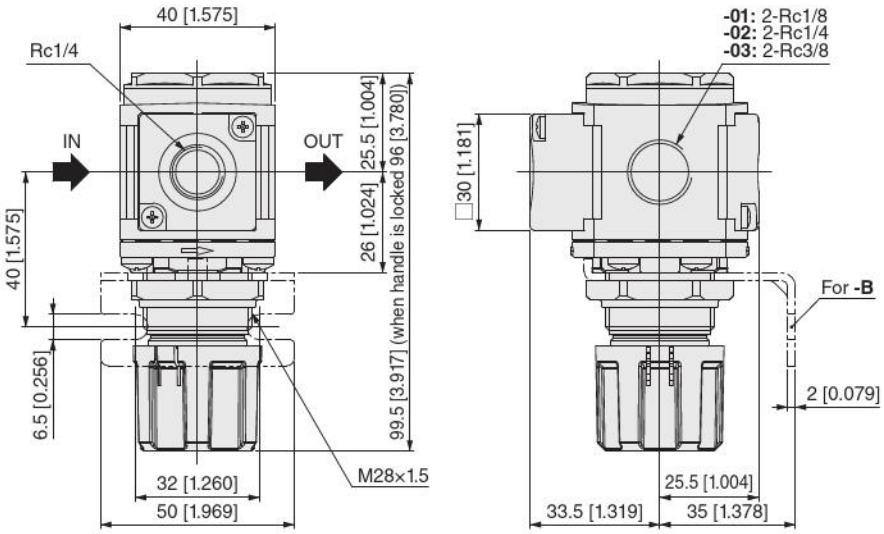

● Pressure gauge option

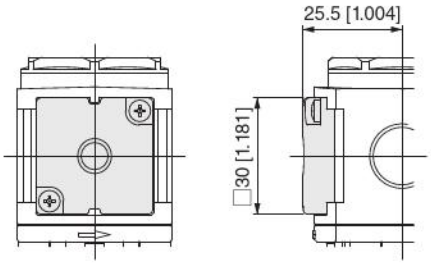

For **-GN**

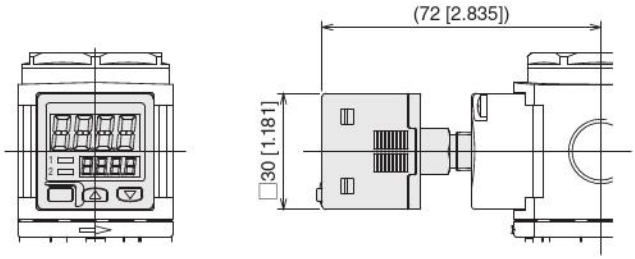

For **-GS6**

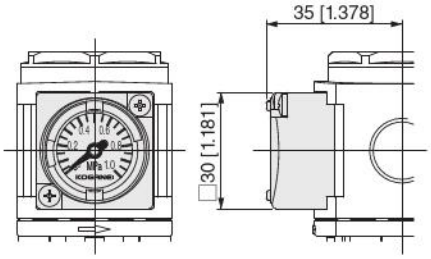

For **-G1C, -G4C**

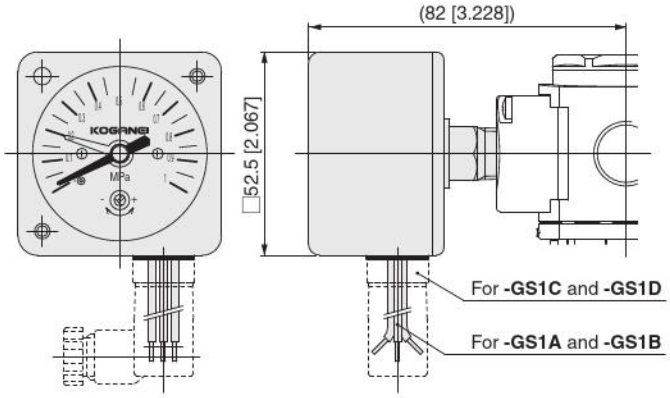

For **-GS1A, -GS1B, -GS1C** and **-GS1D**

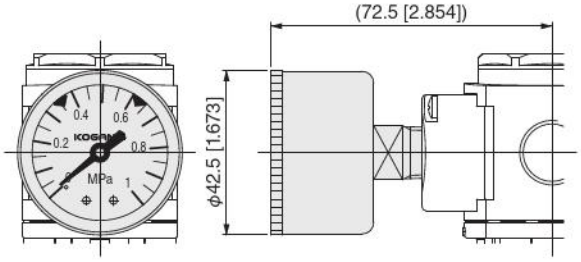

For **-G1, -G3**

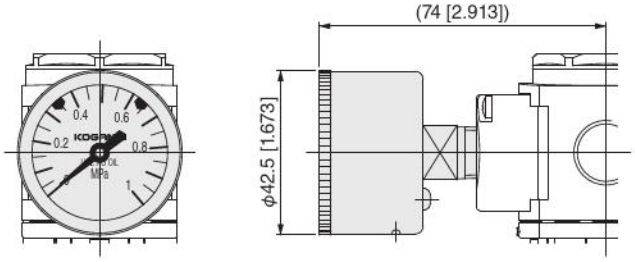

For **-G1S, -G3S**

Filter regulator dimensions (mm [in.])

● **RZ50**
● **RZ51**

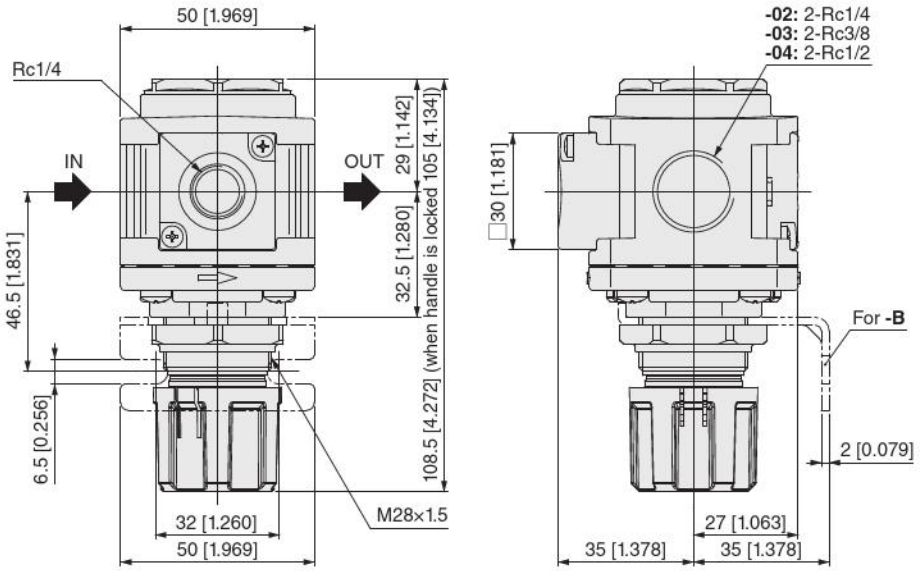

● Pressure gauge option

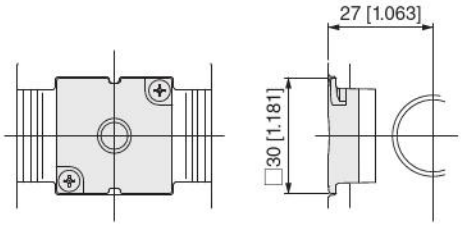

For **-GN**

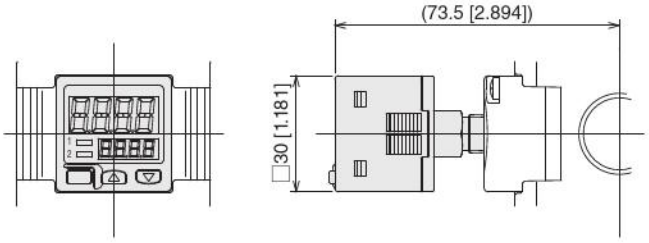

For **-GS6**

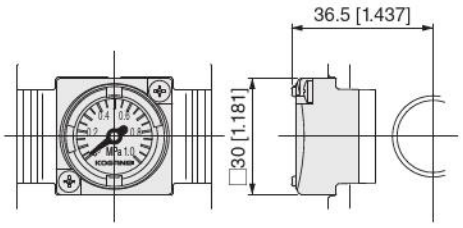

For **-G1C, -G4C**

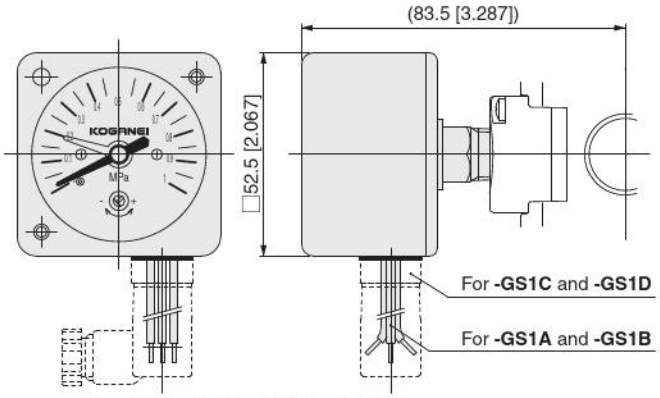

For **-GS1A, -GS1B, -GS1C** and **-GS1D**

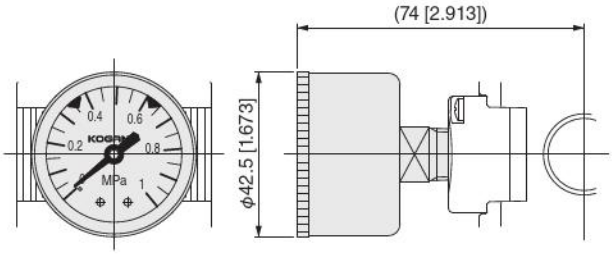

For **-G1, -G3**

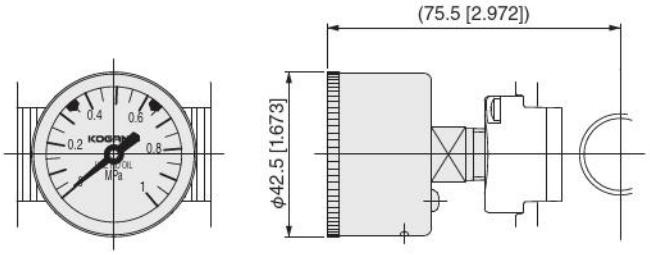

For **-G1S, -G3S**

Design and selection

● Selection

See the Handling Instructions and Precautions, Specifications, Various Characteristics, Dimensions, and other technical materials for each product to make the correct decision.

Mounting (installation) and piping

● Mounting (installation) direction, support, and securing

1. The products cannot be mounted (installed) if a bending moment or twisting moment is applied to the product or piping.

NOTE Applying bending moment or twisting moment may damage the product.

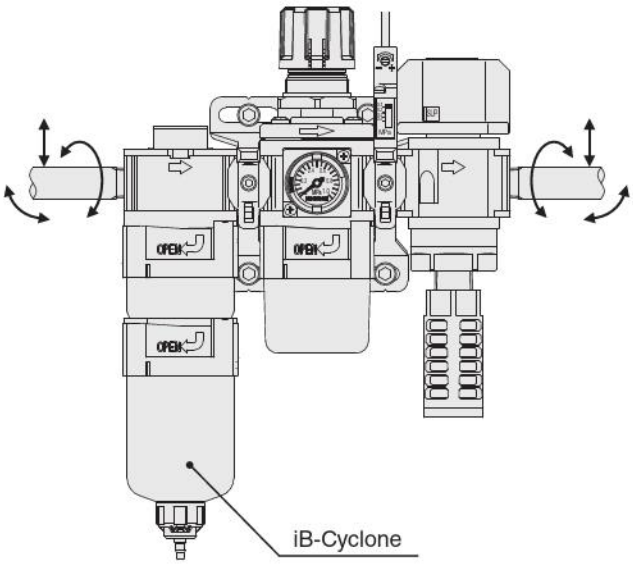

2. Do not attach piping so that just one side is fixed as shown in the following diagram. Support external piping separately.

NOTE The moment caused by the OUT (secondary) side pipes may damage the product's piping connections.

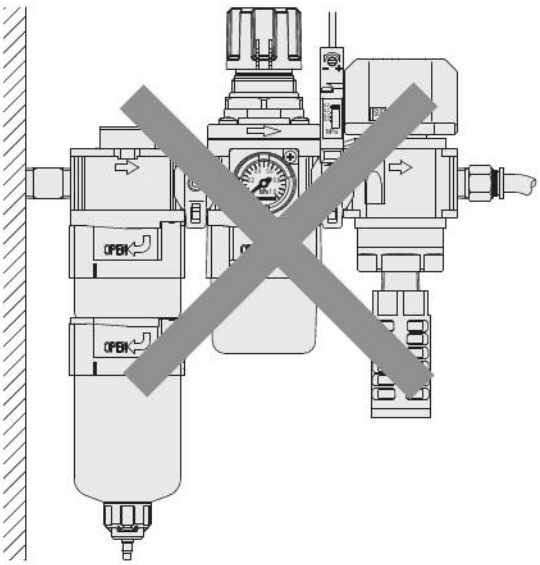

3. Use the D modules, brackets, etc. to install the products.
4. The product can be mounted (installed) in any direction. It is also possible to install it with the bowl of the filter on top.

5. When mounting (installing) a product, always make sure it is secured and sufficiently supported.

NOTE If a product is not securely fixed in place, it can fall over, be dropped, or operate abnormally and cause an injury.

● Maintenance space requirements

Assure there is sufficient space for maintenance inspections and maintenance work. See the dimension diagram for each of the products regarding the maintenance space.

NOTE If there is not enough allowance for maintenance space, it will be impossible to remove the bowl assembly and replace the element.

NOTE If there is not enough allowance for maintenance space, it will be impossible to do maintenance inspections and maintenance work so the equipment may stop or the product may be damaged.

● Direction of flow

1. Connect the filter regulator or regulator so that the medium flows in the IN port (primary) side and out the OUT port (secondary) side.
2. For filter regulators and regulators, identify the direction of flow of the medium being used by the flow marks on each product. See the "Handling Instructions and Precautions (Filter Regulators, Regulators on page 136) for the relationship of the direction of flow of the medium and the flow marks.

NOTE Connecting a product so that the flow of the medium is reversed can damage the product or cause it to stop functioning.

● Attaching steel pipes and fittings

If steel pipes and fittings are attached to the threaded sections of the aluminum die-cast parts of the product, tighten them to the torque recommended in our standards.

NOTE Tightening with excess torque may damage the product or injure workers or operators.

Recommended tightening torque N·m [ft·lbf]

Connecting thread	M5	1/8	1/4	3/8	1/2
Torque	1 to 1.5 [0.738 to 1.106]	4.5 to 6.5 [3.319 to 4.794]	7 to 9 [5.163 to 6.638]	12.5 to 14.5 [9.220 to 10.695]	20 to 22 [14.752 to 16.227]

NOTE When mounting the various pressure gauges to a pressure port plate with Rc1/8 or Rc1/4, tighten them to 3.0 to 5.0 N·m [2.213 to 3.688 ft·lbf].

NOTE When mounting something, such as a muffler, to the 3(R) port of a residual pressure exhaust valve, tighten it to 1.8 to 2.2 N·m [1.328 to 1.623 ft·lbf].

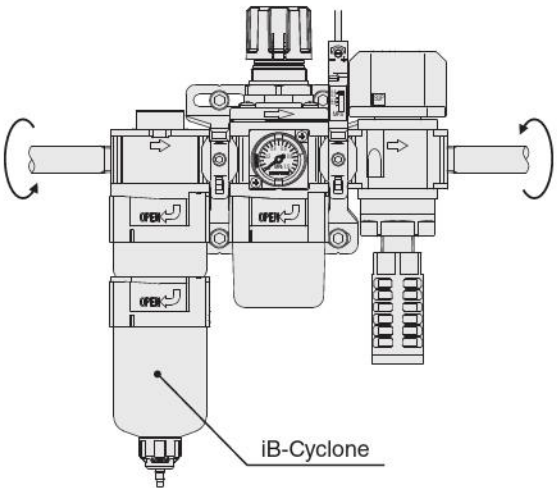

● Preventing contamination by foreign matter

1. Remove all foreign matter, such as metal chips, cutting oil, or dirt, from inside pipes with an air blower (flushing) and thorough washing before fitting the pipes.
2. Do not allow foreign matter, such as metal chips, or sealing tape from the piping threads, to get into the pipes when fitting the pipes.

   NOTE Foreign matter entering the piping may damage the product or reduce its performance and service life.

3. Wrap the sealing tape in the direction as shown in the diagram below leaving 1.5 to 2 threads uncovered. When using liquid sealant, apply a suitable amount and also leave 1.5 to 2 threads uncovered.

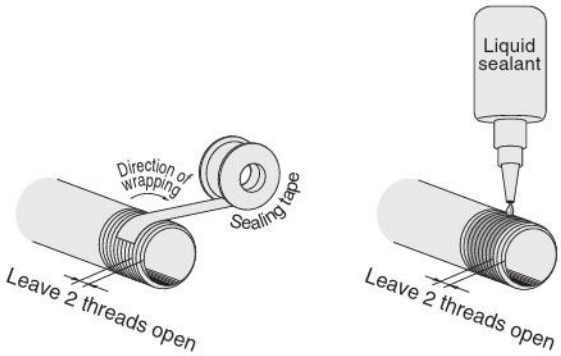

   NOTE When fitting the pipes, if there is sealing tape or liquid sealant on the end cap of the steel pipes or fittings, the fragments may get into the pipes and cause an air leak.

4. If you are using liquid sealant, do not get it on the bowl of the filter regulator or the front cover of the pressure gauge.

   NOTE If liquid sealant gets on the parts, it may damage them.

Medium and operating environment

● Usable medium

1. Use cleaned air (using a filter of 5 μm or less) for the medium. Contact the nearest Koganei sales office or overseas department if you are considering using something other than cleaned air.
2. Do not use air that contains moisture or fluids.

   NOTE Using air that contains moisture and fluids will cause the product's functions to stop after a short period and will reduce the product performance and service life.

3. If air that contains moisture and fluids is used, or if it is possible that they may be mixed in with the air being used, then be sure to install a moisture and fluid removal device (such as iB-Cyclone) on the primary side to reliably remove moisture and fluids.
4. Avoid using media that is prone to extreme pulsating or surging.

   NOTE Medium prone to extreme pulsating or surging will cause the product's functions to stop after a short period and will reduce the product performance and service life.

● Operating environment

1. Do not use equipment in locations that are subject to direct sunlight (ultraviolet rays); locations with high humidity and temperature, dust, salt, or iron powder.
2. Cover the unit when using it in locations where it might be subject to excessive dust, dripping water, dripping oil, etc.
3. Do not use equipment in environments subject to external vibration or impact.

   NOTE External vibrations or shocks may result in damage to component parts.

4. Avoid piping that is rigid, such as steel piping, if vibrations are transmitted. Use flexible tubes so that the product is not subject to the vibrations.

● Medium and operating environment

1. The temperature of the medium and the ambient environment must be within the range in the specifications.

   NOTE Using the product in an environment that is outside the specified temperature or with media that is outside the specified temperature will cause the product's functions to stop after a short period and will reduce the product performance and service life.

2. Do not use media in the product or use the product in an environment that includes corrosive components such as organic solvents, phosphate ester type hydraulic oil, sulfur dioxide, chlorine gas, Freon gas, ozone, acids, alkaline, or in atmospheres or locations with screw lock agents, leak detection fluids, or hot water, or direct exposure to ultraviolet rays. See the reference materials on page 162 for details.

   NOTE Using the product in an environment or with media that is specified in the above item 2 will cause the product's functions to stop after a short period and will reduce the product performance and service life.

Operation and maintenance inspections

● Method of use

Read the Handling Instructions and Precautions for how to use each product for instructions on correct usage (filter regulators, regulators on page 136 to 140, □30 [1.181] integrated pressure gauge on page 140).

● Maintenance (maintenance inspection)

1. Performance and functions may decrease as the pneumatic equipment ages. Always conduct daily inspections of the pneumatic equipment, and confirm that all requisite system functions are satisfied, to prevent accidents from happening.
2. Read the Handling Instructions and Precautions for instructions on the correct way to do maintenance and replace maintenance parts (filter regulators and regulators on pages 139 to 140).
3. The product must be disassembled and reassembled to use the seal kit.

   NOTE Products that have been disassembled and reassembled are not covered by the warranty.

Design and selection

● Pressure settings

1. If the pressure being applied exceeds the set pressure value of the device or equipment that is installed on the OUT port (secondary) side of the filter regulator or regulator, such that it may damage the device or equipment or cause malfunctions, then be sure to install a safety device.
2. We recommend that the OUT port (secondary) side pressure setting be 85% or less of the IN port (primary) side supply pressure.

   NOTE If the pressure is set to a value exceeding 85%, the pressure on the IN port (primary) side and the flow rate used will be easily affected, causing the pressure on the OUT port (secondary) side to become unstable.
3. It is not possible to use an internal pilot type filter regulator or regulator (applicable models FRZ4□, FRZ5□, RZ4□, RZ5□) with a valve installed on the IN port (primary) side to repeatedly switch the IN port (primary) side pressure.

   NOTE The OUT port (secondary) side set pressure may fluctuate due to switching of the IN port (primary) side pressure.
4. If air is not consumed for a long time, or if a sealed circuit or balance circuit is used, the pressure on the OUT port (secondary) side may fluctuate. Contact the nearest Koganei sales office or overseas department.
5. Contact the nearest Koganei sales office or overseas department if you intend to use the product in a circuit that requires high-precision pressure adjustment.

● OUT port (secondary) side pressure exhaust and breather hole

1. When reducing the OUT port (secondary) side pressure by turning the handle on the filter regulator or regulator, or when exhausting OUT port (secondary) side pressure when it has risen above the set pressure, the pressure is exhausted to the outside through the breather hole shown in the figure below.

   NOTE There may be some vibration and noise during exhaust.
2. If sudden pressure increases occur on the OUT port (secondary) side of the filter regulator or regulator, such as are caused by external forces applied to the actuator, then install a separate exhaust mechanism on the OUT port (secondary) side of the filter regulator.

   NOTE The relief port is smaller than the piping bore, so it may not be able to handle a sudden pressure increase on the OUT port (secondary) side.

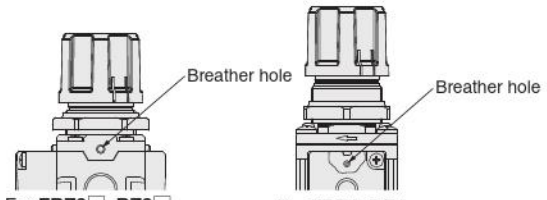

For **FRZ3□, RZ3□**

For **FRZ4, RZ4, FRZ5,** and **RZ5**

● Backflow (residual pressure exhaust) from the OUT port (secondary) to the IN port (primary)

1. To release the pressure from the IN port (primary) of a direct-acting filter regulator or regulator (applicable models FRZ3/RZ3) and process the residual pressure from the OUT port (secondary), select a filter regulator or regulator with a built-in check mechanism (applicable model FRZ32, RZ32).

   NOTE Depending on the conditions of use, etc., processing residual pressure on the OUT port (secondary) side may not be possible for the standard and low-pressure specifications.
2. For internal pilot type filter regulators and regulators (applicable models FRZ4□, FRZ5□, RZ4□, RZ5□), when the pressure on the IN port (primary) side is released, the residual pressure on the OUT port (secondary) side is processed through the relief port.

   NOTE If the volume of the OUT (secondary) side flow path is large, exhaust may take time.
3. If you are using a filter regulator or regulator with a built-in check mechanism (applicable models FRZ32 and RZ32) installed after the valve to adjust the actuator thrust, make sure that the pressure on the OUT port (secondary) side of the filter regulator or regulator with a built-in check mechanism does not rise above the set pressure due to the back pressure of the actuator (as a guide, use an actuator with a difference in pressure of 0.3 MPa [44 psi] or less between the push side and pull side).

<Reference> System upgrade with filter regulator or regulator with built-in check mechanism

Filter regulators and regulators with a built-in check mechanism open the built-in check valve when the IN port (primary) side pressure is lost, thereby disrupting the pressure balance, and the main valve opens instantly to release the OUT port (secondary) side pressure to the IN port (primary) side. Since the thrust force on the push and pull sides of the actuator can be easily changed, air consumption can be reduced by operating the side that does not require thrust force at a lower pressure.

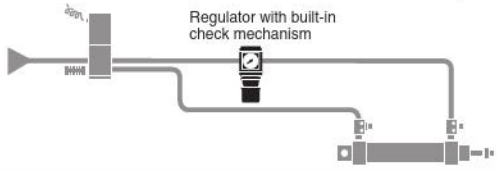

● Moisture and fluid removal

The filter regulator has no function to remove moisture or fluid.

● Air consumption

1. Internal pilot type filter regulators and regulators (applicable models FRZ4□,FRZ5□, RZ4□, RZ5□) consume air while regulating the OUT port (secondary) side pressure.
2. Air consumption varies depending on the relationship between the pressure on the IN port (primary) side and the pressure on the OUT port (secondary) side.
3. Internal pilot type filter regulators and regulators (FRZ4□, FRZ5□, RZ4□, RZ5□) if the IN port (primary) side and OUT port (secondary) side are sealed, the pressure will drop due to air consumption.

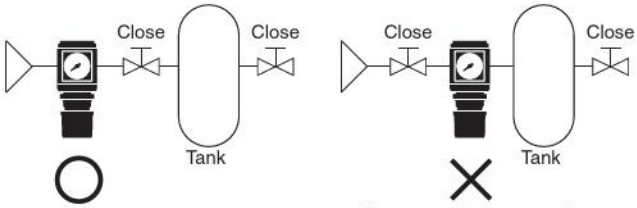

Air consumption causes the pressure in the tank to drop.

Mounting (installation) and piping

● Flow mark

The following diagram shows the relationship of the direction of flow of the medium and the flow mark on filter regulators and regulators.

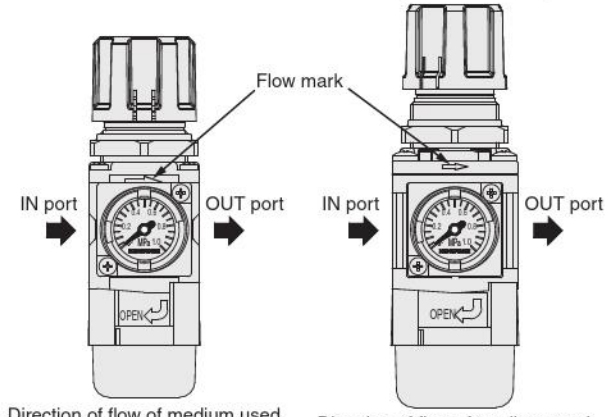

Direction of flow of medium used

For **FRZ3□, RZ3□**

Direction of flow of medium used

For **FRZ4□, FRZ5□, RZ4□, RZ5□**

● Piping work

Connect pipes and fittings to the filter regulator or regulator IN ports and OUT ports so that the weight and torque of the pipes do not affect the product. When tightening the piping, hold the main unit and tighten it to the torque recommended on page 135.

NOTE Applying unnecessary force or impact to the handle, bowl assembly, or pressure gauge may damage component parts.

● Installing brackets

To install brackets, do it in the following order.

1. Remove the handle.
   (See "Removing the Handle" on page 138 for instructions on how to remove the handle.)
2. Install the bracket.
3. Screw on the mounting ring.

NOTE Tighten the mounting ring to 5.0 N·m [3.688 ft·lbf] or less.

4. Install the handle.
   (See "Installing the Handle" on page 138 for instructions on how to install the handle.)

● Panel mount

1. The diameter of the mounting hole in the panel for all sizes of filter regulators and regulators is ϕ28.5 mm [1.122 in.].

2. See the following table for the thicknesses of the panels.

mm [in.]

Model	FRZ3□ RZ3□	FRZ4□ RZ4□	FRZ5□ RZ5□
Thickness	3 [0.118] or less	7 [0.276] or less	

NOTE Using panels that are thicker than specified will cause panels to not be securely fastened with the mounting rings or reduce the visibility of the yellow caution ring.

3. To install panel mounts, do it in the following order.

1. Remove the handle.
   (See "Removing the Handle" on page 138 for instructions on how to remove the handle.)
2. Install the filter regulator or regulator to the panel.
3. Screw on the mounting ring.

NOTE Tighten the mounting ring to 5.0 N·m [3.688 ft·lbf] or less.

4. Install the handle.
   (See "Installing the Handle" on page 138 for instructions on how to install the handle.)

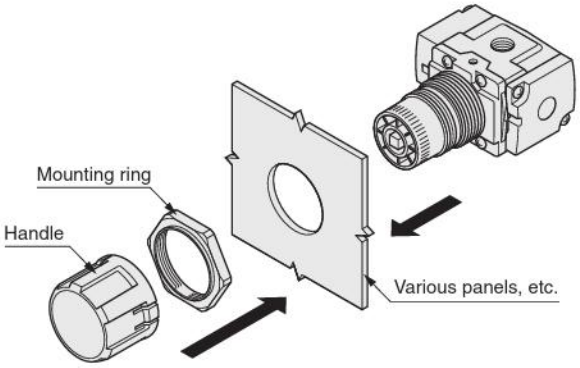

Operation and maintenance inspections

● Locking and unlocking the handle

1. The handles on the filter regulators and regulators have a push-lock mechanism.
Use the procedure shown below to lock and unlock the handle.

2. The handle must be unlocked to adjust the pressure.

NOTE Turning the handle while it is locked may cause damage to component parts.

3. After adjusting the pressure, lock the handle.

● Pressure adjustment

1. To adjust the pressure, turn the handle in the "+" direction as indicated on the bottom of the handle as shown in the diagram below to increase pressure, and turn the handle in the "-" direction to decrease pressure.

NOTE If you turn the handle too far, it may cause damage to internal parts or cause them to stick, making the handle harder to turn.
Be careful not to turn it too far.

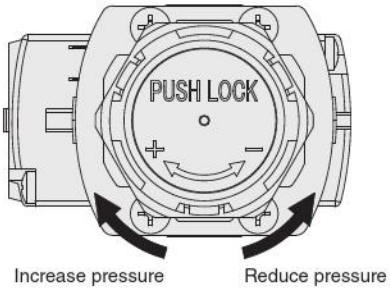

2. When adjusting the pressure, start from the low pressure side and adjust to the desired setting pressure.If you exceed the desired pressure, lower the pressure and then adjust to the desired setting pressure again from the low pressure side.

NOTE If you adjust the pressure to the desired setting from the high pressure side, it may cause the pressure on the OUT port (secondary) side to become unstable.

3. When adjusting the pressure, check the pressure on the IN port (primary) side and OUT port (secondary) side by using a pressure gauge or other device.

4. Even though the handle can be turned to the "+" side maximum value, which increases the pressure beyond the upper limit of the set pressure range, you need to keep the pressure within the set pressure range while you adjust it.

● **Removing the handle**

To remove the handle, do it in the following order.

1. Unlock the handle.
   (See "Locking and unlocking the handle" on page 137 for instructions on how to lock/unlock the handle.)
2. Turn the mounting ring counterclockwise (in the direction of the arrow in the figure below).

NOTE Turn the mounting ring until it comes off the threads.

3. Pull the mounting ring towards the handle.

NOTE Pull the release sleeve of the mounting ring until it pushes open the claws (3 positions) on the handle.

4. Pull off the handle and mounting ring together.

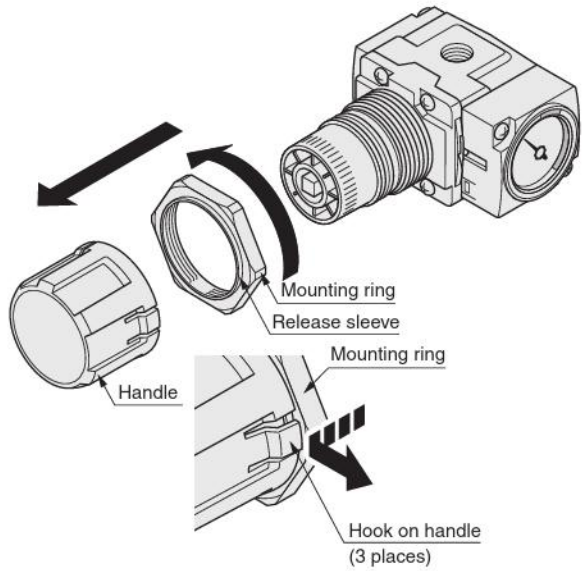

● **Installing the handle**

1. To install the handle, do it in the following order.

1. Release the pressure on the IN port (primary) side to atmosphere.
2. Screw on the mounting ring.

NOTE Installing the handle before screwing in the mounting ring will cause the mounting ring to become unattachable or the handle to become difficult to remove.

3. Push the handle in until the yellow caution ring is no longer visible.

NOTE Before pushing the handle in, align the □ shape on the adjusting assembly (see exploded view on page 139) with the □ hole shape on the bottom of the handle.

2. If the handle is attached while pressure is supplied to the IN port (primary) side of the filter regulator or regulator, the OUT port (secondary) side pressure may temporarily increase.
If a temporary increase in the OUT port (secondary) side pressure can cause damage or malfunction of the OUT port (secondary) side equipment or devices, be sure to release the IN port (primary) side pressure to the atmosphere before attaching the handle.

NOTE Doing so can damage the product or injure workers or operators.

3. Before attaching the handle, check that the temporary increase in pressure on the OUT port (secondary) side will not affect equipment and devices downline if the pressure on the IN port (primary) side cannot be released to the atmosphere.

● **Interchangeable □30 [1.181] integrated pressure gauge and pressure port plate**

When rotating the □30 [1.181] integrated pressure gauge 180° or when interchanging a □30 [1.181] integrated pressure gauge or a pressure port plate, do it in the following order.

1. Remove the two small retaining screws.
2. Remove any metal chips from the female threads, such as by using an air blower.

NOTE If there are any metal chips left, they can damage the screw threads or the metal chips might stick to the O-ring, causing air to leak.

3. Install the O-ring on the □30 [1.181] integrated pressure gauge or pressure port plate.

NOTE Not assembling the O-ring will result in air leaks.

4. Align the notches on the □30 [1.181] integrated pressure gauge or the pressure gauge port plate with the protrusions on the main unit to assemble them.
5. Tighten the two small retaining screws to a torque of 0.9 to 1.1 N·m [7.966 to 9.736 in·lbf].

NOTE Tightening to a torque that exceeds the specified value can cause the screw head or bit to break or damage the component parts. Tightening to a torque that is less than the specified value might allow the screws to loosen and let air leak out.

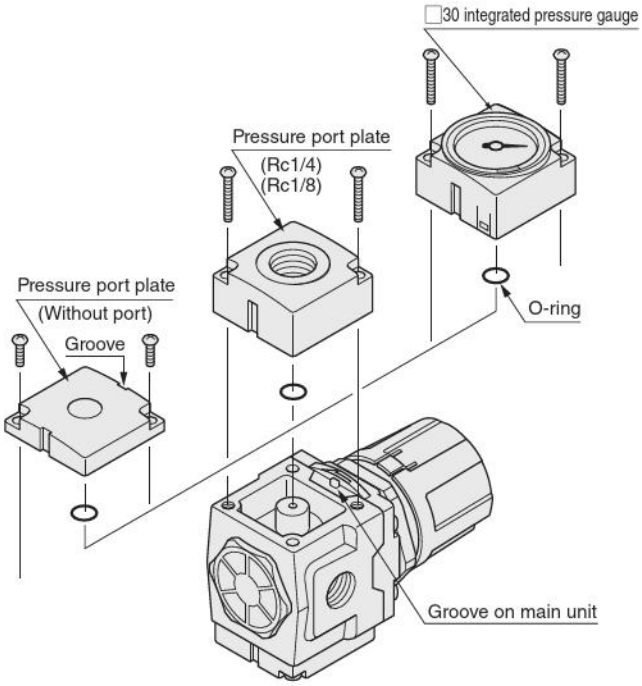

Filter regulator
Regulator

● Installing included options

1. When attaching the various pressure gauges and other things, be sure to tighten them by using a tightening tool on the square or hexagonal parts of the ports.

   NOTE Holding the main body of the various pressure gauges as you tighten them can cause damage to their component parts.

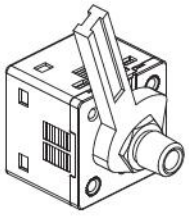

2. When mounting the various pressure gauges to a pressure port plate with Rc1/8 or Rc1/4, tighten them to 3.0 to 5.0 N·m [2.213 to 3.688 ft·lbf].

   NOTE Tightening to a torque that exceeds the specified value can cause damage to the component parts. Tightening to a torque that is less than the specified value might allow the screws to loosen and let air leak out.

3. The female threaded part of the pressure port plate with Rc1/8 or Rc1/4 has a stopper.

   NOTE Tightening it more after it hits the stopper, can cause damage to the component parts.

● Replacing the pressure port plate, handle, mounting ring

1. To replace the pressure port plate, see "Replacing the □30 [1.181] integrated pressure gauge and pressure port plate" on page 138.
2. To replace the handle and mounting ring, see "Removing the handle" and "Installing the handle" on page 138.

● Replacing the seal kit, element, and bowl assembly

1. To replace the seal kit, element, and bowl assembly, remove the filter regulator or regulator and do the work on a work table.
2. Apply grease to the seal materials, such as the O-rings (but not the diaphragm) that are used on the filter regulator or regulator.
3. Contact the nearest Koganei sales office or overseas department if you are considering re-applying grease to the O-rings. Recommended grease: Lithium soap base No. 2 equivalent
4. Periodically replace the element of the filter regulator.

   NOTE The service life of the element varies depending on the quality of air supplied to the IN port (primary) side. If the air supplied to the IN port (primary) side is highly contaminated with foreign matter, install a prefilter on the IN port (primary) side or change the air filter frequently. As a guideline, the replacement time for the element is one year after starting to use it.

5. When replacing the seal kit, element, and bowl assembly, be careful not to lose component parts.
6. See the diagram at right to replace the seal kit, element, and bowl assembly.

   NOTE Always assemble the component parts correctly.

Bowl side of filter regulator

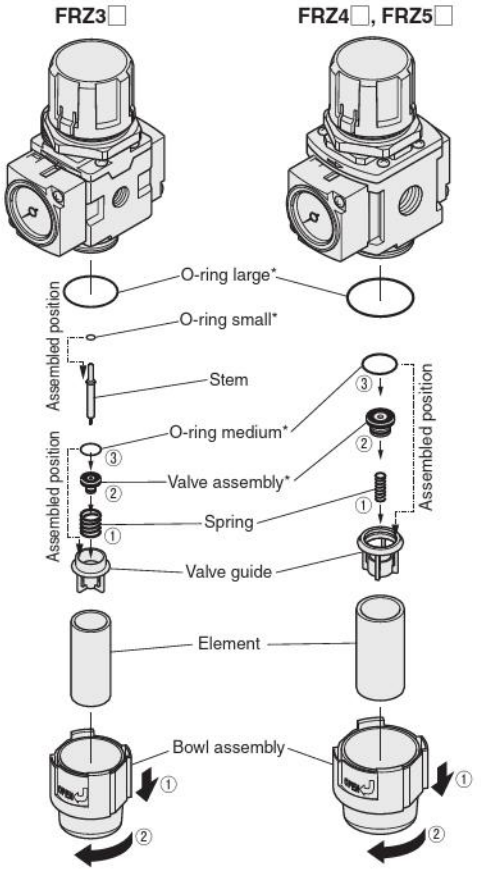

The * mark indicates component parts of the seal kit.

NOTE Products that have been disassembled and reassembled are not covered by the warranty.

Handle side of regulator, filter regulator

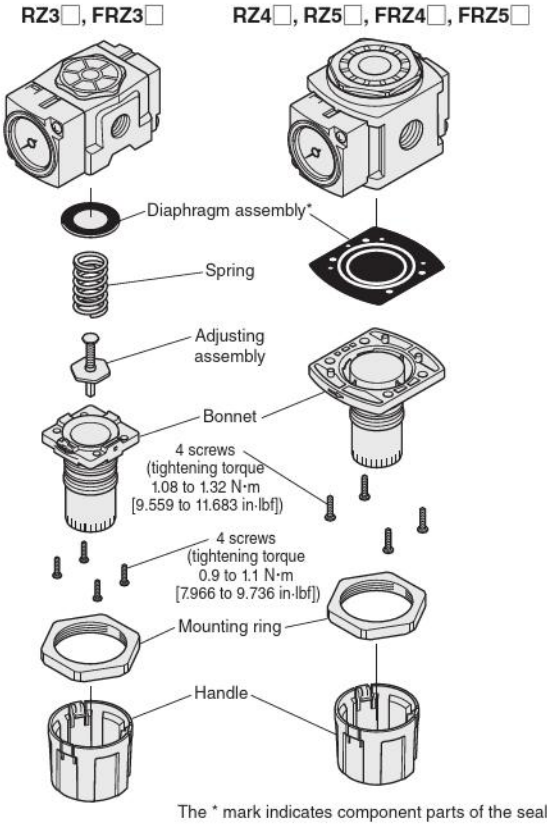

The * mark indicates component parts of the seal kit.

NOTE Products that have been disassembled and reassembled are not covered by the warranty.

Plug side of regulator

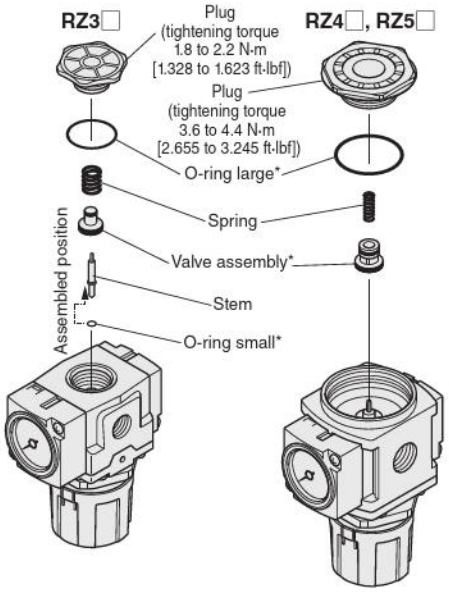

The * mark indicates component parts of the seal kit.

NOTE Products that have been disassembled and reassembled are not covered by the warranty.

□30 [1.181] integrated pressure gauge

Mounting (installation) and piping

● Mounting (installation)

1. When installing the □30 [1.181] integrated pressure gauge to a filter regulator, refer to "Replacing the □30 [1.181] integrated pressure gauge and pressure port plate" on page 113.
2. When installing the □30 [1.181] integrated pressure gauge to a filter regulator or regulator, install it in the orientation shown in the diagram below.

NOTE The □30 [1.181] integrated pressure gauges can be installed by rotating them to a 180° orientation, but they cannot be installed by rotating them to a90° orientation.

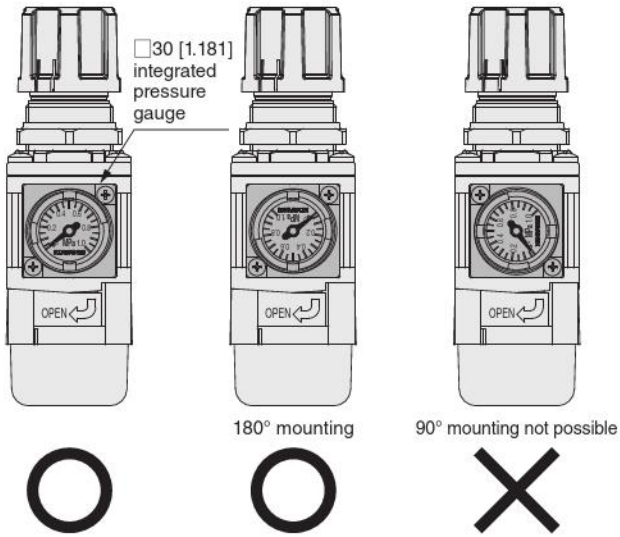

Medium and operating environment

● Pulsation, vibration, impact

The □30 [1.181] integrated pressure gauge is a precision device. It cannot be used if the medium being used pulsates or if it is subject to vibration or impact from outside.

NOTE Pulsating of the medium being used, or external vibrations or impacts may result in damage to component parts.

Operation and maintenance inspections

● Adjusting the range of the set pressure

1. Adjust the range of the set pressure (green area) in the following order.
   1. Adjust the lower limit of the set pressure range by rotating the protrusions (2 places) clockwise by hand.
   2. Adjust the upper limit of the set pressure range by rotating the protrusions (2 places) counterclockwise by hand.

NOTE Adjusting the set pressure range with tools, etc. can damage the component parts.

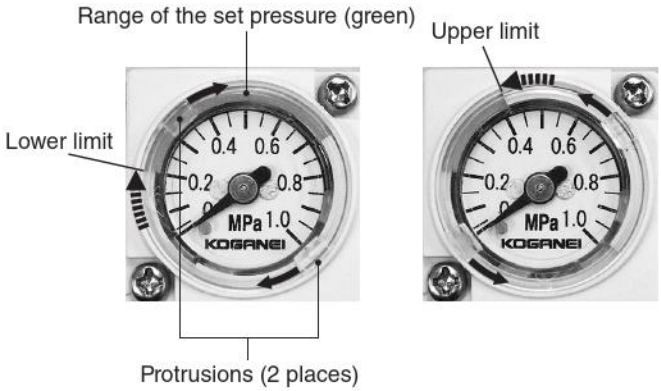

See page 154 for the specifications and dimension diagrams for the □30 [1.181] integrated pressure gauge.

Residual pressure exhaust valve

50VZ

Symbols

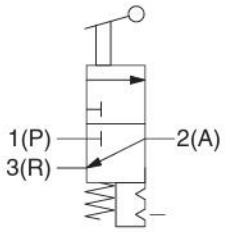

Specifications

Item			Model	50VZ-01	50VZ-02	50VZ-03	50VZ-04
Media				Air			
Port size Rc	1 (P) · 2 (A)			1/8	1/4	3/8	1/2
	3 (R)			3/8			
Maximum operating pressure			MPa [psi]	1.0 [145]			
Proof pressure			MPa [psi]	1.5 [218]			
Operating temperature range (atmospheric and medium)			°C [°F]	5 to 60 [41 to 140]			
Operation method				Manual knob			
Number of positions/number of ports				2 positions/3 ports			
Force to operate knob			N·m [ft·lbf]	1.0 [0.738]			
Angle to operate knob				90°			
Flow rate characteristics	1 (P) → 2 (A)	Sonic conductance C	dm^3 (s·bar)	4.28	8.60	12.46	13.36
		Critical pressure ratio	b	0.23	0.38	0.21	0.31
		Effective cross section area (Cv value) Note	mm^2 [Cv]	21.38 [394.5] (1.19 [21.956])	43.01 [793.5] (2.39 [44.096])	62.28 [1149] (3.46 [63.837])	66.81 [1233] (3.71 [68.450])
	2 (A) → 3 (R)	Sonic conductance C	dm^3 (s·bar)	7.87	11.00		
		Critical pressure ratio	b	0.89	0.32		
		Effective cross section area (Cv value) Note	mm^2 [Cv]	39.36 [726.2] (2.19 [40.406])	54.99 [1015] (3.06 [56.457])		
Materials used in major parts	Main unit			Die cast aluminum alloy			
	Knob			Polyacetal			
Weight			kg [lb]	0.22 [0.485]	0.22 [0.485]	0.21 [0.463]	0.20 [0.441]
Options				Bracket <Steel plate (electroless nickel plated)>			

Notes: The effective cross section values are calculated values, and are not measured values.
Remarks 1: Specification values are based on Koganei test standards.
2: Equipped with a hole for a padlock during exhaust. Compliant with OSHA (Occupational Safety and Health Administration: standards for worker safety)

Order Codes

50 VZ – [ ] – [ ]

Bracket
Blank —— No bracket
B —— With bracket

Port size

Rc1/8	Rc1/4	Rc3/8	Rc1/2
01	**02**	**03**	**04**

Residual pressure exhaust valve

● Order codes for brackets only

8Z-BV

* Compatible brackets
(For replacement of residual pressure exhaust valves in multi series 300V, 600V)

8Z-BV [ ]

300 —— for 300V
600 —— for 600V

Inner construction

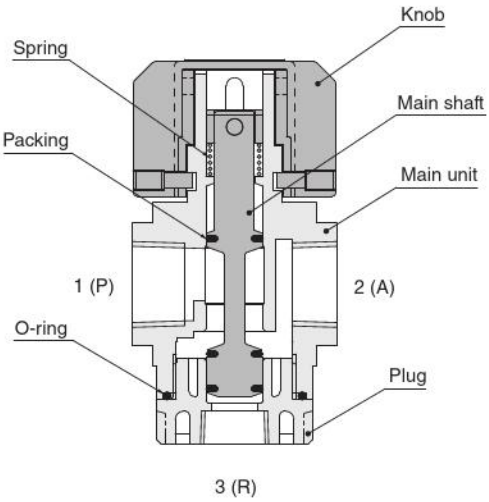

Flow rate characteristics

● Air supply flow rate

50VZ-01

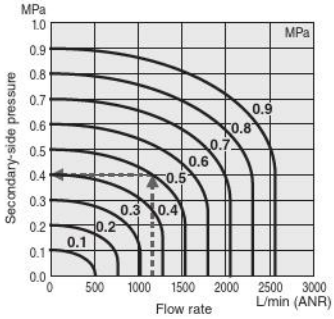

50VZ-02

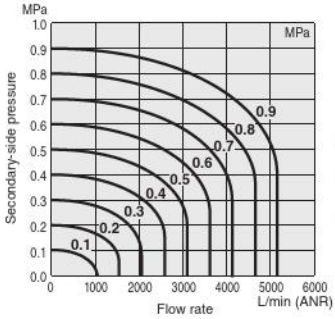

50VZ-03

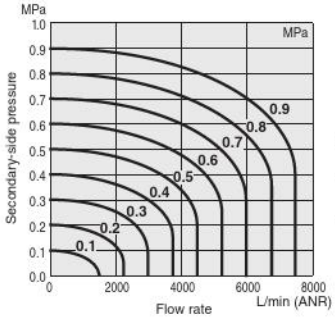

50VZ-04

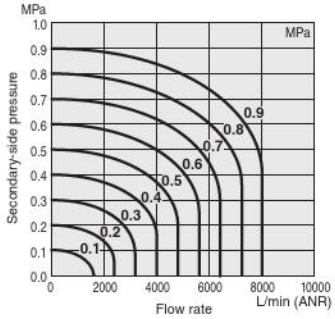

Interpreting the graphs

When the supply pressure is 0.5 MPa [73 psi] and the flow rate is 1150 L/min (ANR) [40.618 ft³/min (SCFM)], the valve outlet pressure is 0.4 MPa [58 psi].

● Exhaust flow rate

50VZ-01

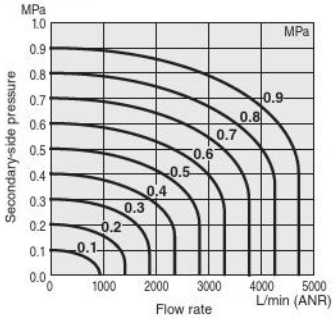

50VZ-02, -03, -04

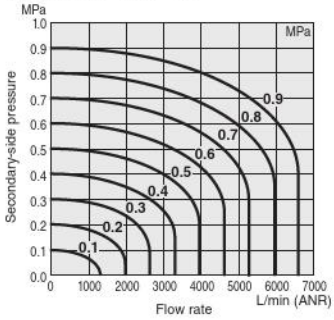

Residual pressure exhaust valve dimensions (mm [in.])

● 50VZ

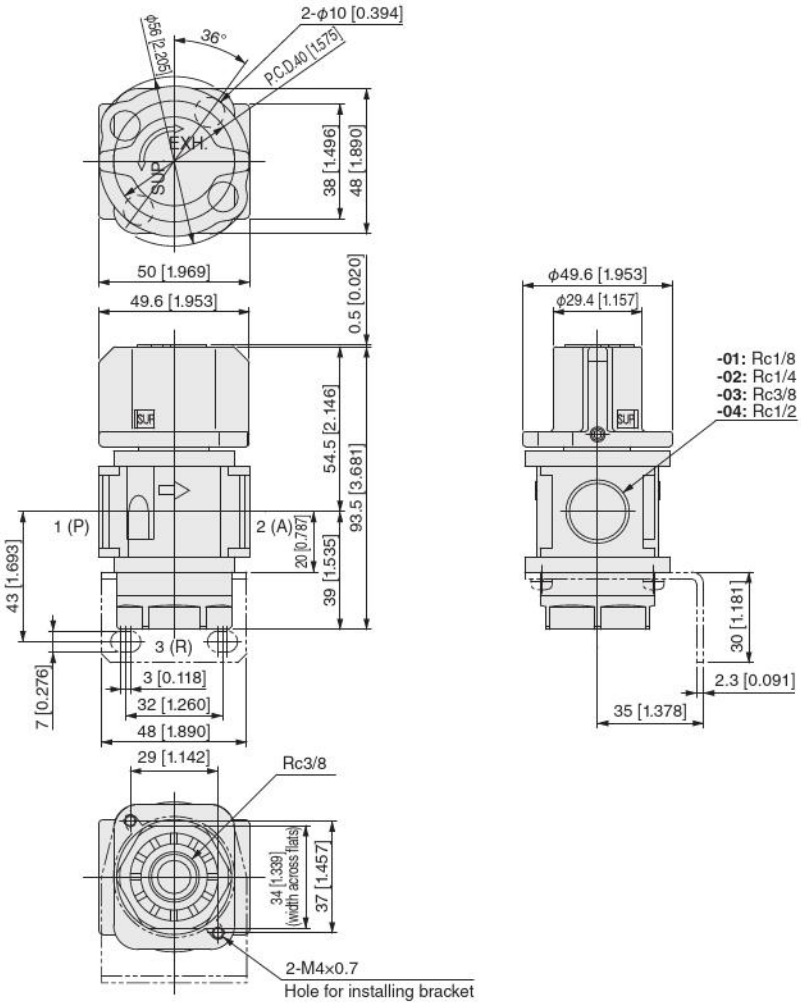

Residual pressure exhaust valve

Design and selection

Install the residual pressure exhaust valve on the OUT port (secondary) side of the standard specification and low pressure specification filter regulator and regulator.

NOTE If the residual pressure exhaust valve is installed on the IN port (primary) side of the standard and low-pressure specification filter regulators and regulators, processing residual pressure on the OUT port (secondary) side may not be possible depending on operating conditions.

Mounting (installation) and piping

● Flow mark

The following diagram shows the relationship of the direction of flow of the medium and the flow mark on residual pressure exhaust valves.

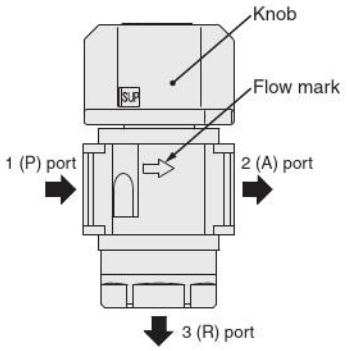

● Piping work

1. Connect pipes and fittings to the residual pressure exhaust valve 1 (P) port and 2 (A) port so that the weight and torque of the pipes do not affect the product. When tightening the piping, hold the main unit and tighten it to the torque recommended on page 135.

   NOTE Applying unnecessary force or impact to the knob may damage component parts.

2. When mounting something, such as a muffler, to the 3(R) port of a residual pressure exhaust valve, tighten it to 1.8 to 2.2 N·m [1.328 to 1.623 ft·lbf].

   NOTE Tightening to a torque that exceeds the specified value can cause damage to the component parts. In addition, tightening to a torque that is less than the specified value might allow the screws to loosen.

● Installing brackets

To install brackets, use the following procedure.

① Install the bracket.
② Tighten the two small retaining screws to a torque of 1.24 to 1.5 N·m [0.915 to 1.106 ft·lbf].

NOTE Tightening to a torque that exceeds the specified value can cause the screw head or bit to break or damage the component parts. Tightening to a torque that is less than the specified value might allow the screws to loosen and let air leak out.

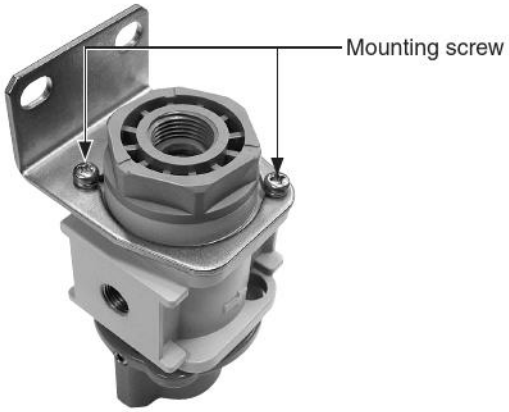

Operation and maintenance inspections

● Air supply and exhaust states

1. In the air intake state, the 1 (P) port (primary) side and the 2 (A) port (secondary) side are connected, and the 3 (R) port is closed.
2. In the exhaust state, the 2 (A) port (secondary) side and the 3 (R) port are connected, and the 1 (P) port (primary) side is closed.

● Switching the air supply and exhaust states

1. To switch between supply and exhaust states, rotate the knob 90° in the direction of "SUP" as indicated on the bottom of the knob in the figure below to switch to supply state, and rotate the knob 90° in the direction of "EXH" to switch to exhaust state.

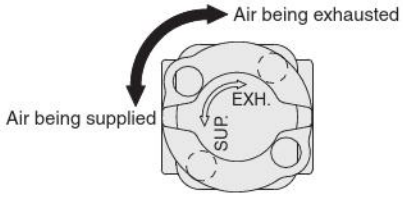

2. Check the state of the residual pressure exhaust valve by looking through the inspection window shown in the figure below. When "SUP" is displayed, the valve is in the supply state, and when "EXH" is displayed, the valve is in the exhaust state.

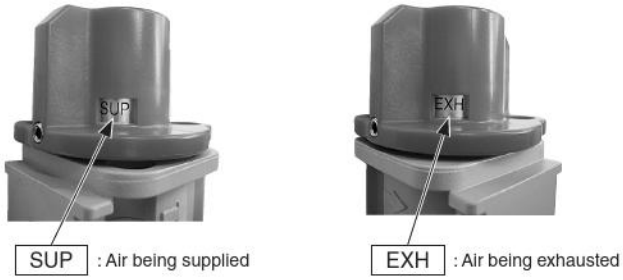

3. When gradually supplying or exhausting air, operate the knob slowly.

   NOTE The air from 1 (P) port (primary) does not flow simultaneously to 2 (A) port (secondary) and 3 (R) port.

● Used as a 2-point valve

When using a residual pressure exhaust valve as a 2-point valve, block the 3 (R) port with a R3/8 plug.

● Using the padlock hole

1. The padlock hole on the residual pressure exhaust valve should be used to secure the valve in the exhaust position with a padlock or similar device to prevent it from being switched to the intake position.

   NOTE The padlock hole cannot be used in the intake position.

2. The diameter of the padlock hole is ϕ10 mm [0.394 in.].
3. The padlock or similar device must be arranged separately.

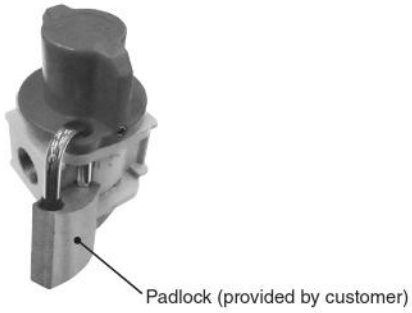

● Reduced exhaust noise

To reduce exhaust noise, install a muffler or similar device on the 3(R) port.
Recommended muffler: Model KM-31

Pressure switch module

Symbols

Specifications

Item / Model		8Z-PS□□	8Z-DPS□□
Media		Air	
Connection type		**FRZ** Series For module mounting only	
Maximum operating pressure	MPa [psi]	1.0 [145]	
Proof pressure	MPa [psi]	1.5 [218]	
Operating temperature range (atmospheric and medium)	°C [°F]	5 to 60 [41 to 140] (non-condensation)	
Set pressure range	MPa [psi]	0.1 to 0.4 [15 to 58]	
Response differential	MPa [psi]	0.08 [12] or less	
Contact method		Contact a contact (NO)	
Electrical Specifications	Wiring type	2-lead wire type	
	Load voltage	5 to 28 VDC, 85 to 115 VAC	
	Load current	40 mA DC MAX., 20 mA AC MAX.	
	Internal voltage drop Note 1	0.1 V MAX. (at load current 40 mA DC)	
	Leakage current	0 mA	
	Response time	1 ms MAX.	
	Insulation resistance	100 MΩ MIN. (using 500 VDC megger, between case and lead wire)	
	Dielectric strength	1500 VAC (50/60 Hz) 1 minute (between case and lead wire terminal)	
	Shock resistance Note 2 m/s^2 [G]	294 [30] (not repetitive)	
	Vibration resistance Note 2 m/s^2 [G]	88.3 [9] (double amplitude 1.5 mm [0.059 in.]·10 to 55 Hz) Resonance frequency 2750 ±250 Hz	
	Lead wire Note 3	PCCV0.2SQ×2-lead (brown and blue) ×ℓ	
	Contact protection measure Note 4	Required	
Weight	Without piping adapter	60 g [2.12 oz] (when lead wire length A: 1000 mm [39.370 in.])	85 g [3.00 oz] (when lead wire length A: 1000 mm [39.370 in.])
	With piping adapter	84 g [2.96 oz] (when lead wire length A: 1000 mm [39.370 in.])	109 g [3.84 oz] (when lead wire length A: 1000 mm [39.370 in.])

Note 1: Internal voltage drop changes with the load current.
2: Measured by Koganei test standard.
3: Lead wire length ℓ: A; 1000 mm [39.370 in.], B; 3000 mm [118.1 in.]
4: Refer to page 146 for information about contact protection measures.

Caution: The pressure switch module cannot be assembled to any of the body sizes in the 30 series.
The 30 series body size is for standalone use only.

Internal circuit

Order Codes

● Pressure switch module

8Z – PS □ □

Lead wire length
A —— 1000 mm [39.370 in.]
B —— 3000 mm [118.1 in.]

Piping adapter
Blank —— Without piping adapter
S1 —— Rc1/8 With piping adapter
S2 —— Rc1/4 With piping adapter
S3 —— Rc3/8 With piping adapter
S4 —— Rc1/2 With piping adapter

● Pressure switch module (with bracket)

8Z – DPS □ □

Lead wire length
A —— 1000 mm [39.370 in.]
B —— 3000 mm [118.1 in.]

Piping adapter
Blank —— Without piping adapter
S1 —— Rc1/8 With piping adapter
S2 —— Rc1/4 With piping adapter
S3 —— Rc3/8 With piping adapter
S4 —— Rc1/2 With piping adapter

Pressure switch module dimensions (mm [in.])

●8Z-PS□

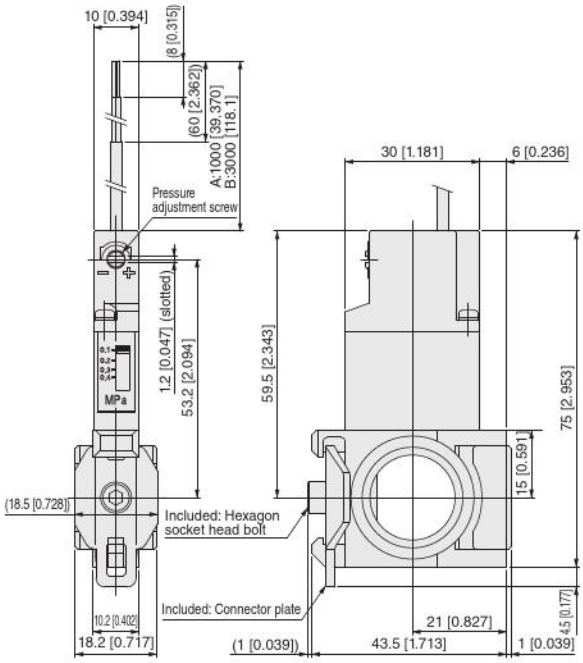

1 connector plate, 1 hexagon socket head bolt, 2 O-rings included

●8Z-DPS□

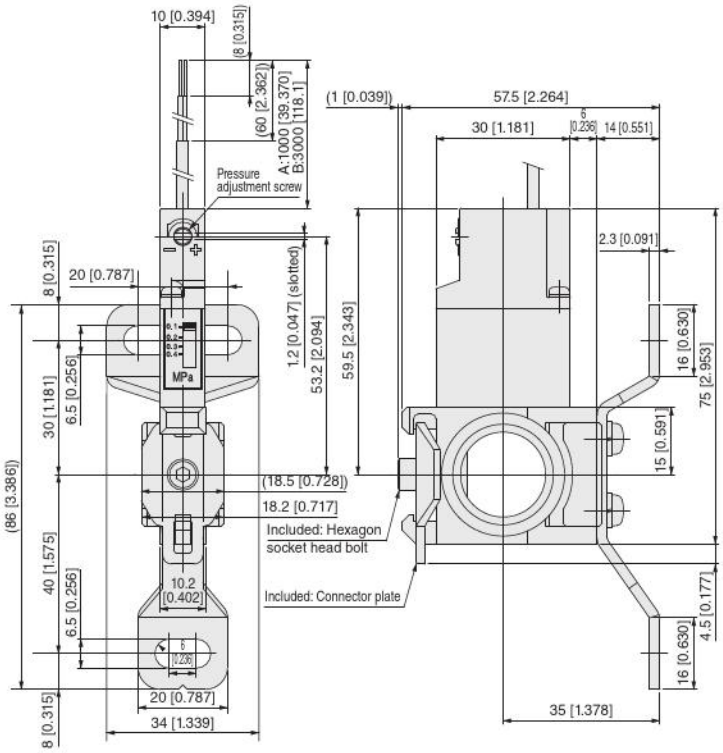

1 connector plate, 1 hexagon socket head bolt, 2 O-rings included

When an S1 to S4 piping adapter is selected

Piping adapter

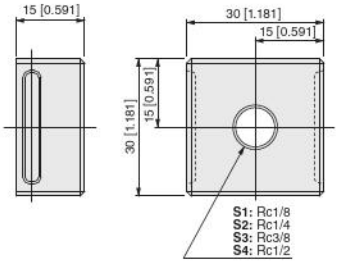

With 1 piping adapter

Pressure switch module

Mounting (installation) and piping

● Mounting (installation)

1. The mounting method for the pressure switch module is the same as for the various modules and adapters. See "Handling Instructions and Precautions" for modules and adapters.
2. Do not pull too strongly on the lead wires or bend them excessively. Also, when handling the product, wait for the pressure switch module side and do not apply excessive force to the lead wires.
3. Handle the pressure switch module with care, as strong shocks may cause damage or malfunctions.

● Contact capacity

Use within the specified load voltage and load current.

NOTE Using the product outside the specified range for the load voltage or load current can cause contact welding or other problems.

● Contact protection measures

The pressure switch module uses a contact sensor switch. Take the contact protection measures shown in the figure below.

NOTE Failure to take contact protection measures may result in contact welding, or other issues.

For connecting an inductive load (electromagnetic relay)

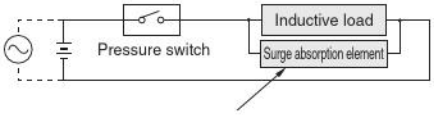

For DC: … Diode or CR, etc.
For AC: … CR etc.
Diode : Forward current should be more than the circuit current and the reverse voltage should be 10 times greater or more than the circuit voltage.
CR : C = 0.01 to 0.1 μF
R = 1 to 4 kΩ

Capacitive surges occur (lead length exceeds 10 m [32.800 ft])

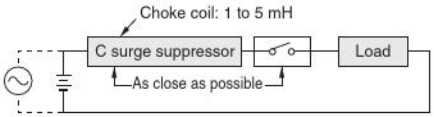

Medium and operating environment

● Operating environment

The pressure switch modules use magnetic sensor switches. Avoid using them in locations subject to strong external magnetic fields and do not bring them in close proximity to power lines and other sources of high electric currents.

NOTE Use in areas with strong external magnetic fields or proximity to high currents can cause the pressure switch module to malfunction.

Operation and maintenance inspections

● Pressure detection scale

1. Use the pressure detection scale as a reference.

NOTE Check the output of the pressure switch module by using a tester or similar device.

NOTE To accurately set the detection pressure, use a separate pressure gauge or similar device.

2. The pressure detection scale is the value that is set when the supply pressure drops.
3. The pressure detection scale is the value that is set when the OFF signal is detected.

NOTE The ON signal is detected at the pressure set by the pressure detection scale plus the differential.

● Setting the detection pressure

1. The detection pressure can be set higher than the detection pressure range in some cases, but be sure to set it within the specified range.

NOTE If it is set to a pressure higher than the range of the detection pressure, it may damage component parts.

2. To set the detection pressure, use the following procedure.
   ① Turn the adjustment screw in the direction shown by the "+" in the figure below to align the adjustment pointer with the desired detection pressure scale.
   ② Supply pressure and confirm with a tester or similar device that a signal is detected at the set pressure.

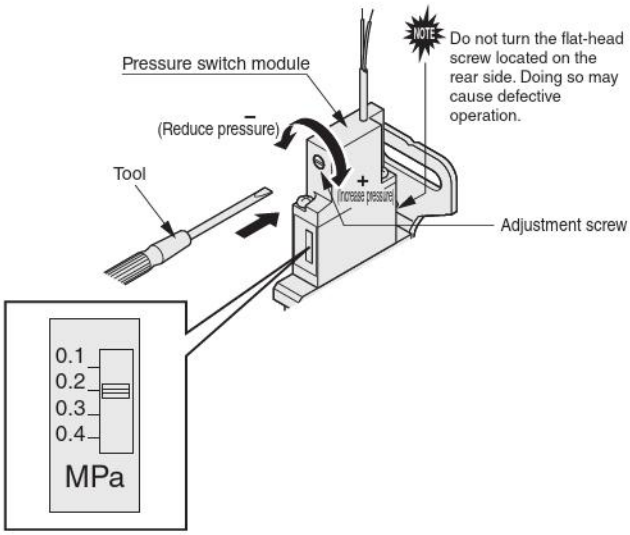

NOTE Do not turn the flat-head screw located on the rear side. Doing so may cause defective operation.

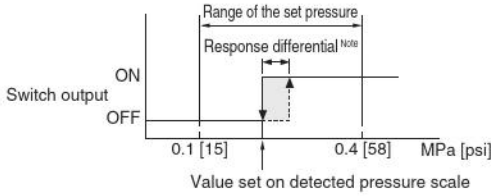

Note: Response differential is 0.08 MPa [12 psi] or less

Modules and adapters

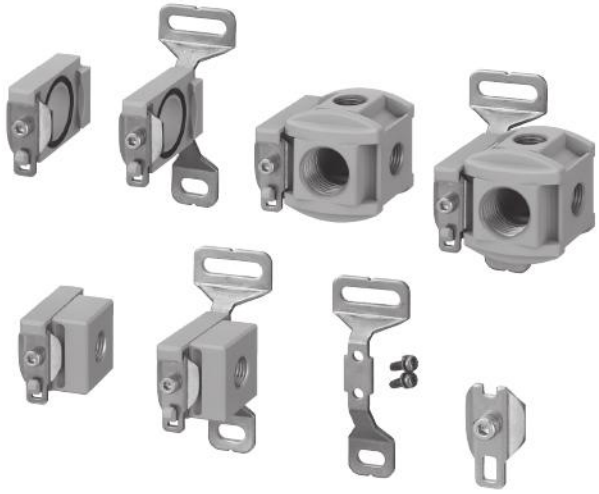

Order Codes

8Z – □ □

Port size Note

Rc1/8	Rc1/4	Rc3/8	Rc1/2
1	**2**	**3**	**4**

Modules and adapters

- **F** ——— Fmodule (for connecting) Note
- **D** ——— D module (for connecting with bracket) Note
- **T** ——— T module (for branching)
- **DT** ——— DT module (for branching (with bracket)
- **S** ——— S adapter (for pipe size conversion)
- **DS** ——— DS adapter (for pipe size conversion, with bracket)
- **DP** ——— Module bracket Note
- **FP** ——— Connector plate Note
- **TP** ——— Intermediate extraction block (for branching, standalone fittings)
- **SP** ——— Piping adapter (for pipe size conversion, standalone fittings)

Note: Note that the F module (F), D module (D), module bracket (DP), and connector plate (FP) do not allow selection of connection port sizes.

Caution: The module adapters cannot be assembled to any of the body sizes in the 30 series. The 30 series body size is for standalone use only.

List of models

	F module	D module
	For connecting	For connecting (With bracket)
Connecting bracket	**8Z-F** 31 g [1.09 oz]	**8Z-D** 57 g [2.01 oz]

Connector plate	Module bracket
8Z-FP 8 g [0.28 oz]	**8Z-DP** 26 g [0.92 oz]

	T module	DT module	S adapter	DS adapter
	For branching	For branching (With bracket)	For pipe size conversion	For pipe size conversion (With bracket)
Connecting bracket + Adapter	**8Z-T□** 188 g [6.63 oz]	**8Z-DT□** 214 g [7.55 oz]	**8Z-S□** 55 g [1.94 oz]	**8Z-DS□** 81 g [2.86 oz]
Adapters only	Intermediate extraction block		Piping adapter	
	For branching (Standalone fittings)		For pipe size conversion (Standalone fittings)	
	8Z-TP□ 157 g [5.54 oz]		**8Z-SP□** 24 g [0.85 oz]	

●Applicable models
iB-Cyclone: **IBCY40**, **IBCY50**
Air filter: **FNZ40**, **FNZ41**, **FNZ50**, **FNZ51**
Oil mist filter: **MFZ40**, **MFZ50**
Micro oil mist filter: **MMFZ40**, **MMFZ50**
Filter regulator: **FRZB40**, **FRZB41**, **FRZB50**, **FRZB51**, **FRZ40**, **FRZ41**, **FRZ50**, **FRZ51**
Regulator: **RZ40**, **RZ41**, **RZ50**, **RZ51**
Residual pressure exhaust valve: **50VZ**

〈Main component materials〉 Connecting fittings, intermediate extraction block, and piping adapter: Die cast aluminum alloy
Module bracket and connecting plate: Steel plate (electroless nickel plating)
Note: Weight is for port size Rc 1/2.

F module dimensions (mm [in.])

●8Z-F

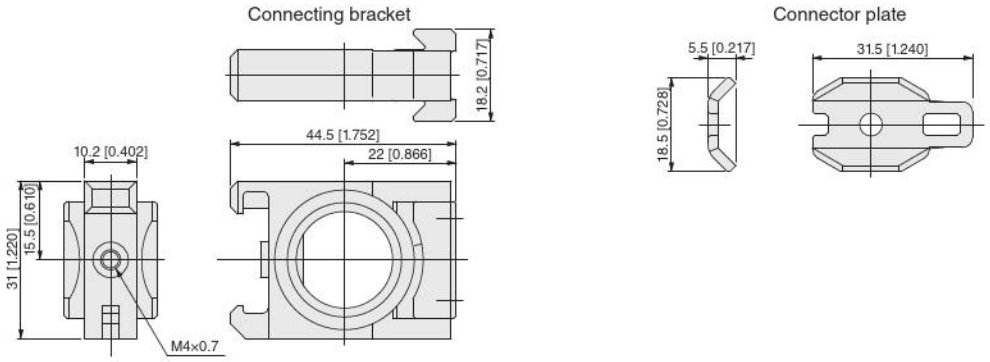

1 hexagon socket head bolt, 2 O-rings included

D module dimensions (mm [in.])

●8Z-D

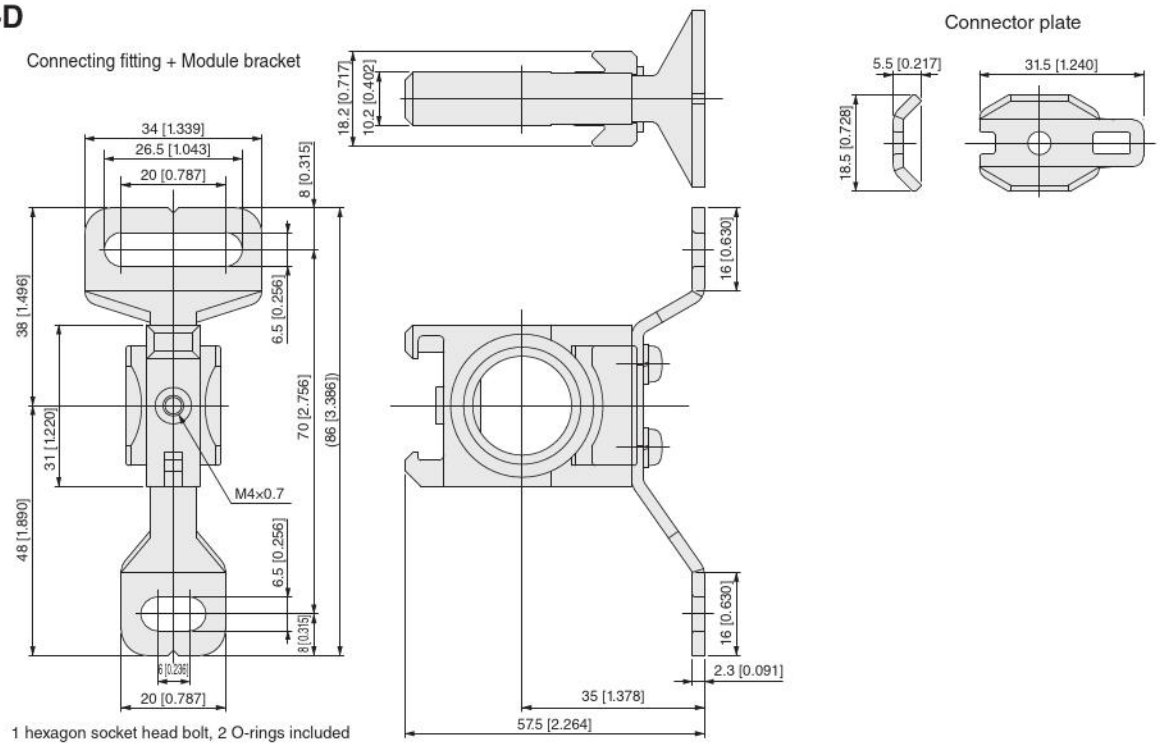

1 hexagon socket head bolt, 2 O-rings included

T module dimensions (mm [in.])

●8Z-T□

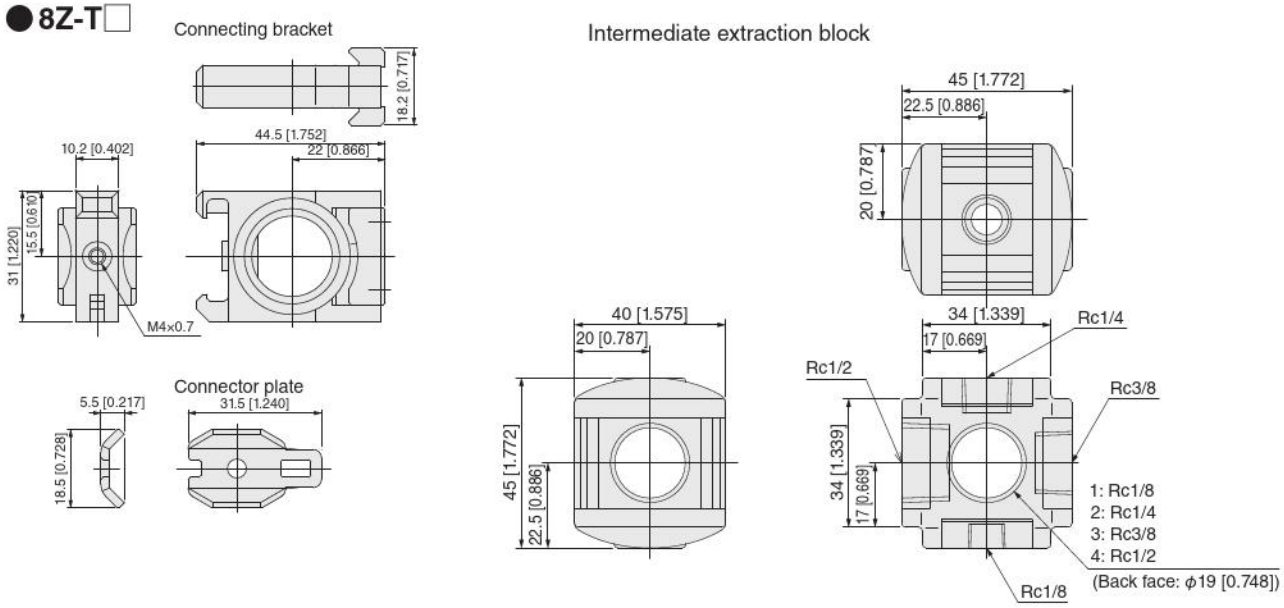

1 hexagon socket head bolt, 2 O-rings included
1 each R1/8, R1/4, R3/8, R1/2 plugs included

DT module dimensions (mm [in.])

● 8Z-DT□

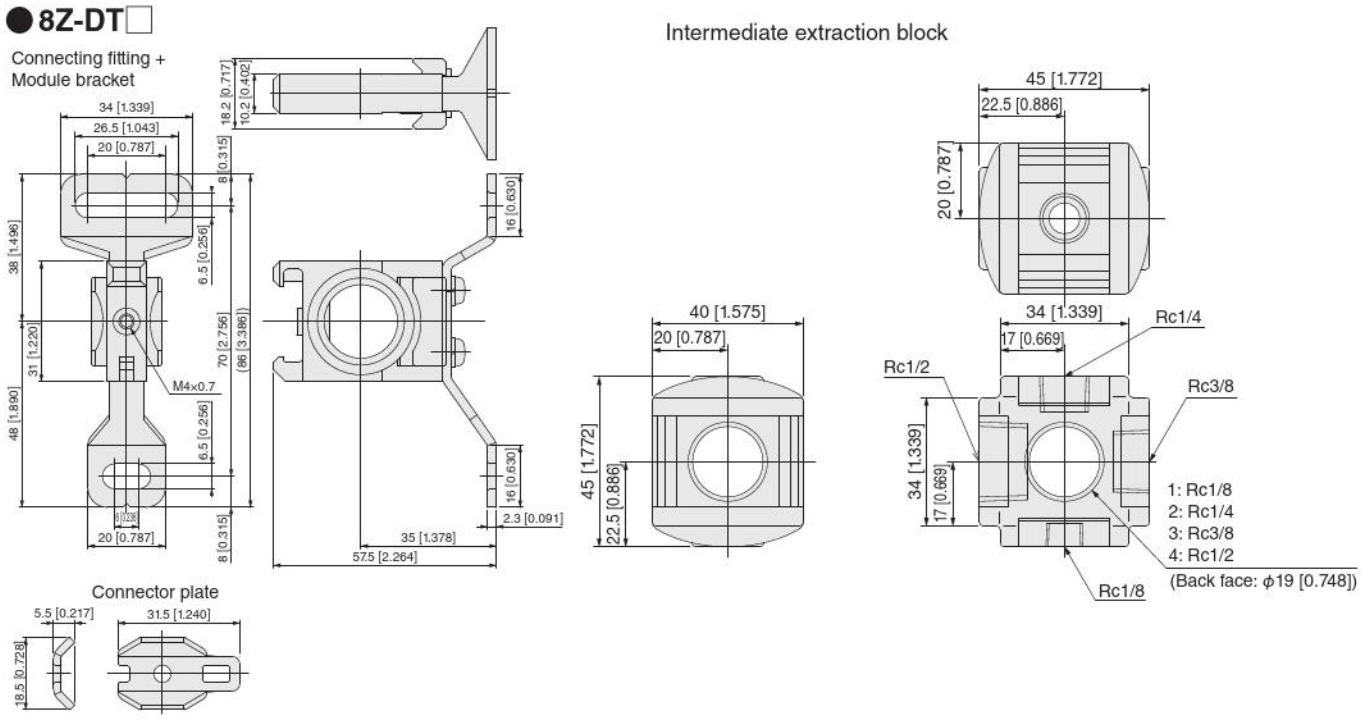

1 hexagon socket head bolt, 2 O-rings included
1 each R1/8, R1/4, R3/8, R1/2 plugs included

S adapter dimensions (mm [in.])

● 8Z-S□

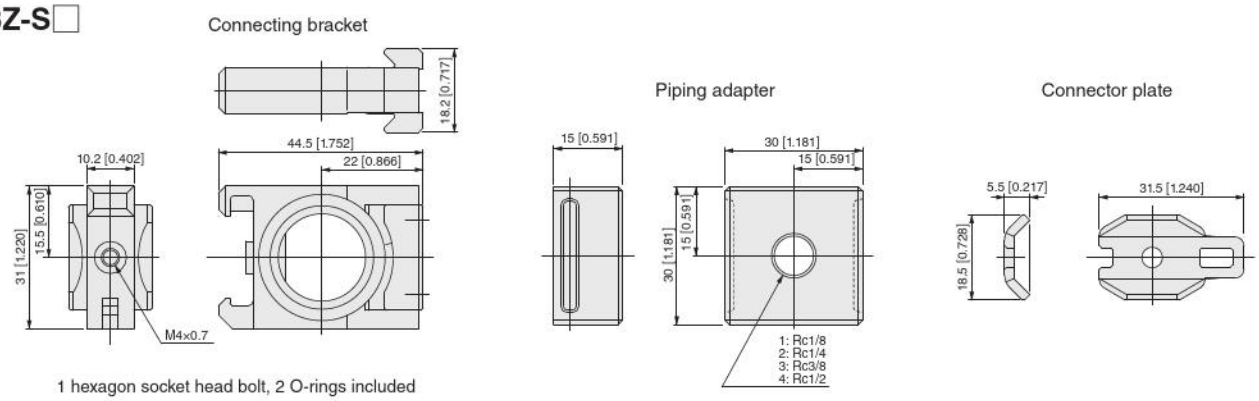

1 hexagon socket head bolt, 2 O-rings included

DS dimensions (mm [in.])

● 8Z-DS□

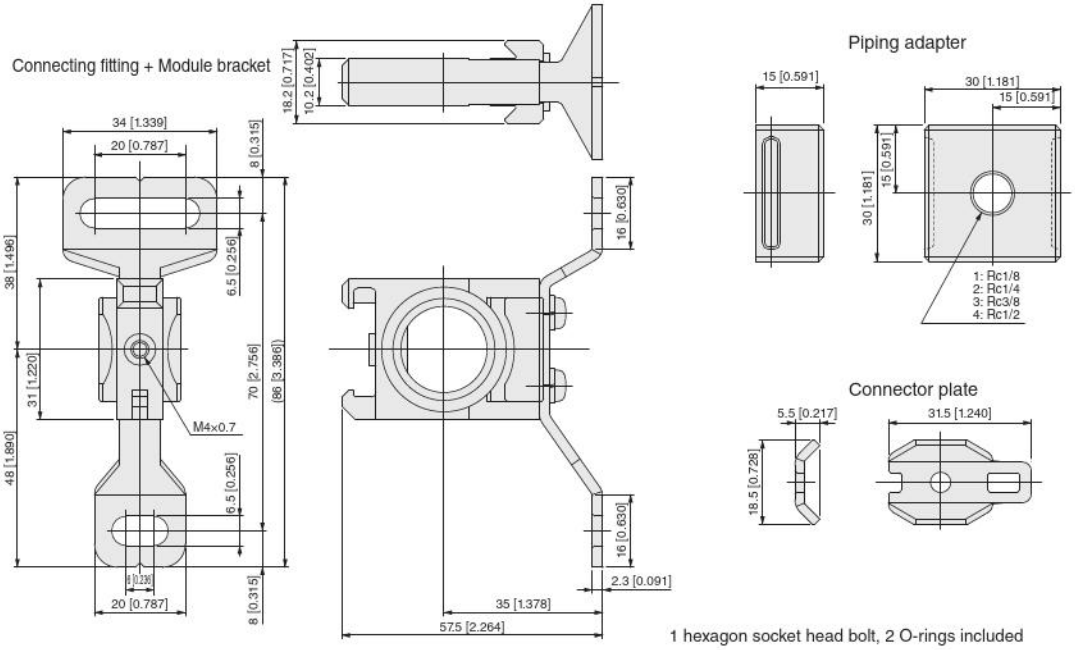

1 hexagon socket head bolt, 2 O-rings included

Module bracket dimensions (mm [in.])

● 8Z-DP

Module bracket

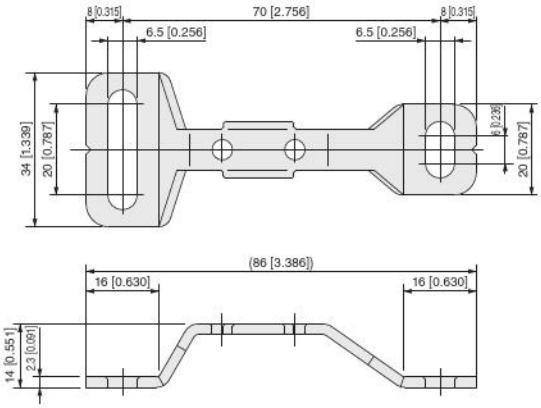

Two cross head tapping screws, 2 washers included

Connector plate dimensions (mm [in.])

● 8Z-FP

Connector plate

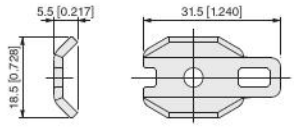

Piping adapter dimensions (mm [in.])

● 8Z-SP□

Piping adapter

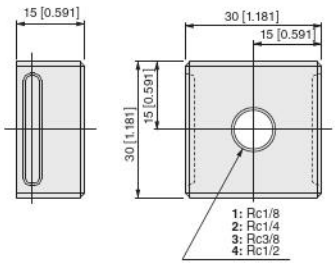

Intermediate extraction block dimensions (mm [in])

● 8Z-TP□

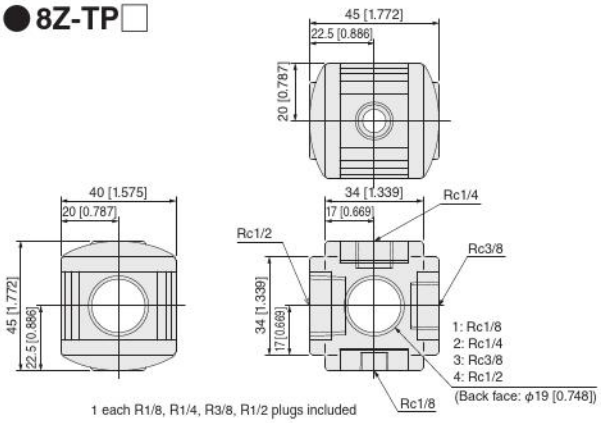

1 each R1/8, R1/4, R3/8, R1/2 plugs included

Handling Instructions and Precautions

Modules and adapters

Mounting (installation) and piping

● Mounting (installation)

1. When using the FRZ series models in combination with the corresponding iB-Cyclone models, use various modules and adapters as required.
2. For compatible models, refer to the “List of Models” on page 147 under Modules and adapters.

NOTE Any of the 30 series and the IBCY30 cannot be used in combinations.

3. When using products in combinations, check the flow mark of each product and align the direction of flow of the medium. See the "Handling Instructions and Precautions" for the relationship of the direction of flow of the medium and the flow marks.
4. To assemble the various modules and adapters to the various products, use the following procedure.
   ① Install O-rings on the connecting hardware (2 locations).

NOTE Not assembling the O-ring will result in air leaks.

   ② Temporarily secure each product with the connecting plate.
   ③ Tighten the hexagon socket bolts with a torque of 0.9 to 1.1 N·m [7.966 to 9.736 in·lbf].

NOTE Tightening to a torque that exceeds the specified value can cause damage to the component parts. In addition, tightening to a torque that is less than the specified value might allow the screws to loosen.

<Examples of combinations>

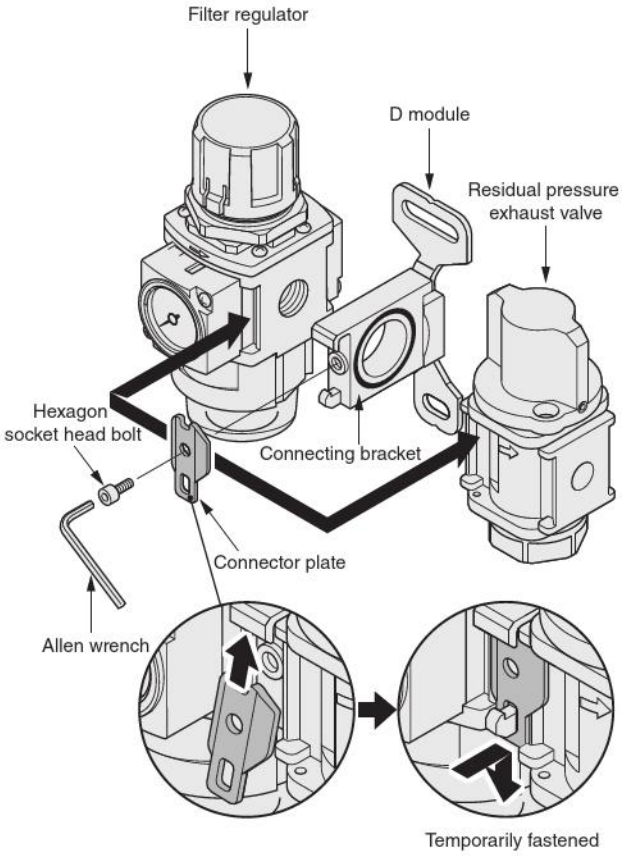

Bracket

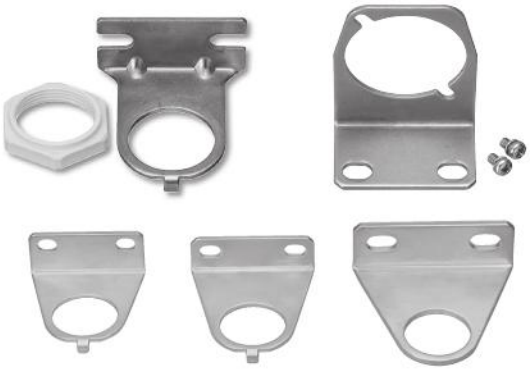

Bracket model and applicable equipment

Equipment model		Bracket model	Remarks
iB-Cyclone	**IBCY30**, **IBCY40**, **IBCY50**	**8Z-CBK** (with mounting ring) **36 g [1.27 oz]**	Main unit support and options
Air filter	**FNZ3□**, **FNZ4□**, **FNZ5□**		
Oil mist filter	**MFZ30**, **MFZ40**, **MFZ50**		
Micro oil mist filter	**MMFZ30**, **MMFZ40**, **MMFZ50**		

[Materials used in major parts] Steel plate (electroless nickel plated)

■ For filter regulators and regulators

Equipment model		Bracket model	Remarks
Filter regulator (with drain cock)	**FRZB3□**, **FRZB4□**, **FRZB5□**	**8Z-BK 32 g [1.13 oz]**	Main unit support and options
Filter regulator (no drain cock)	**FRZ3□**, **FRZ4□**, **FRZ5□**		
Regulator	**RZ3□**, **RZ4□**, **RZ5□**		

[Materials used in major parts] Steel plate (electroless nickel plated)

■ For residual pressure exhaust valve

Equipment model		Bracket model	Remarks
Residual pressure exhaust valve	**50VZ**	**8Z-BV 48 g [1.69 oz]**	Main unit support and options

[Materials used in major parts] Steel plate (electroless nickel plated)

■ Compatible brackets

Compatible equipment model		Bracket model	Remarks
FRZ series	Multi series		
FRZB3□, **FRZ3□**	**FR15□**	**8Z-BK30 34 g [1.20 oz]**	Main unit support types, sold individually
FRZB4□, **FRZ4□**	**FR30□**	**8Z-BK40 43 g [1.52 oz]**	
FRZB5□, **FRZ5□**	**FR60□**	**8Z-BK50 91 g [3.21 oz]**	
RZ3□	**R15□**	**8Z-BK30 34 g [1.20 oz]**	
RZ4□	**R30□**	**8Z-BK40 43 g [1.52 oz]**	
RZ5□	**R60□**	**8Z-BK50 91 g [3.21 oz]**	
FNZ3□, **MFZ30**, **MMFZ30**	**F150**	**8Z-ABK30** Note **34 g [1.20 oz]**	
FNZ4□, **MFZ40**, **MMFZ40**	**F300**, **MF300**, **MMF150**	**8Z-ABK40** Note **51 g [1.80 oz]**	
FNZ5□, **MFZ50**, **MMFZ50**	**F600**, **MF400**, **MF600**, **MMF300**, **MMF600**	–	Multi series **8-60B** can be used as is.
50VZ	**300V**	**8Z-BV300 41 g [1.45 oz]**	Main unit support types, sold individually
50VZ	**600V**	**8Z-BV600 41 g [1.45 oz]**	

Note: To mount the 8Z-ABK□ to the product, purchase the mounting ring R-FRZ separately.

●8Z-CBK

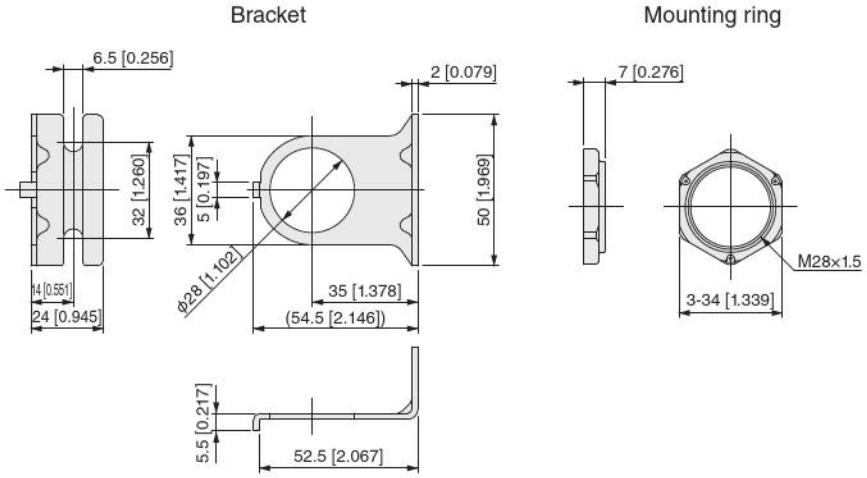

■Mounting ring only

●R-FRZ

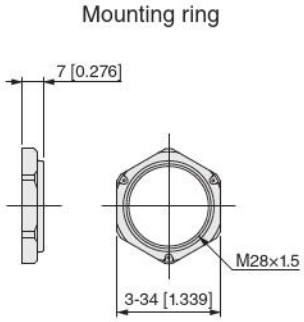

■For filter regulators and regulators

●8Z-BK

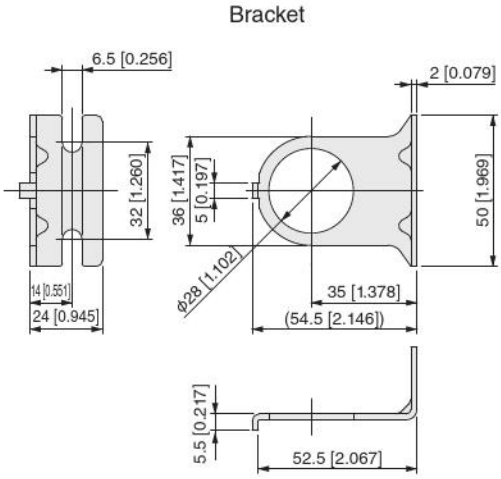

■For residual pressure exhaust valve

●8Z-BV

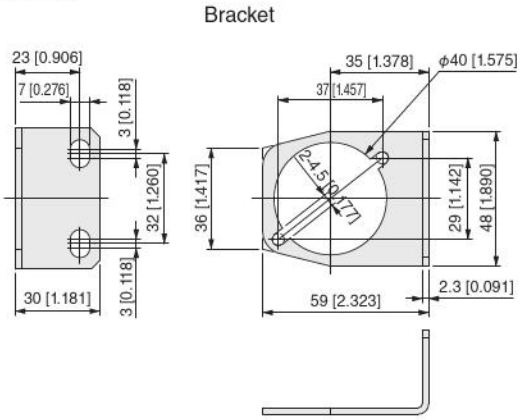

2 small cross head pan screws included

■ Compatible brackets

● 8Z-BK30

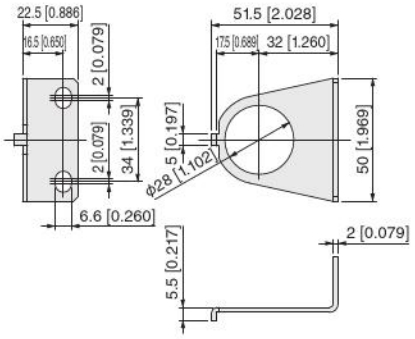

● 8Z-BK40

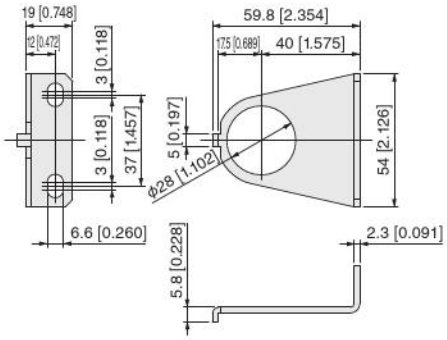

● 8Z-BK50

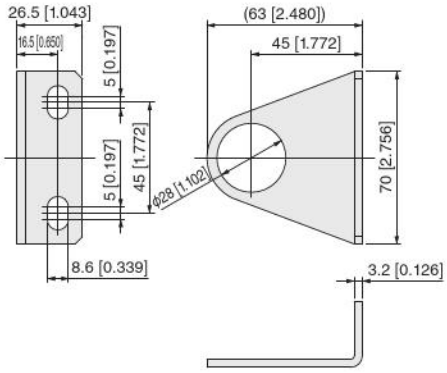

● 8Z-ABK30

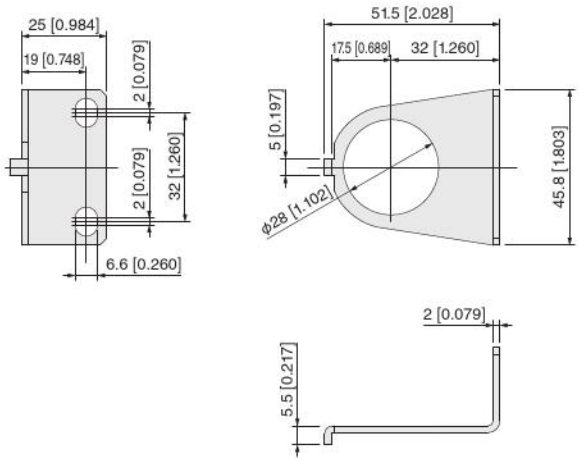

● 8Z-ABK40

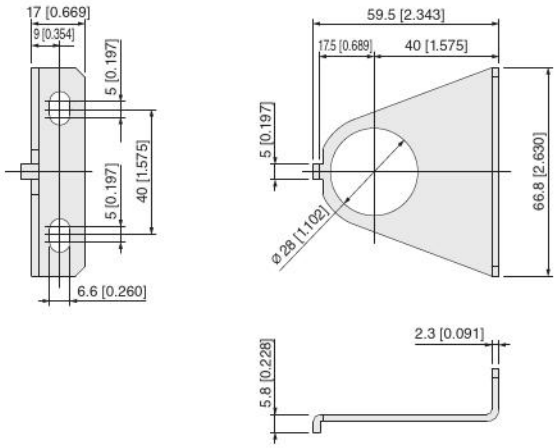

● 8Z-BV300

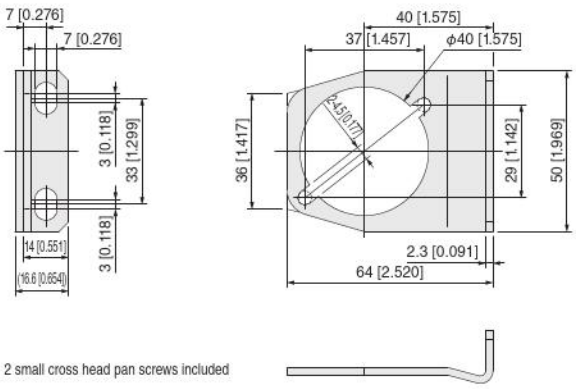

2 small cross head pan screws included

● 8Z-BV600

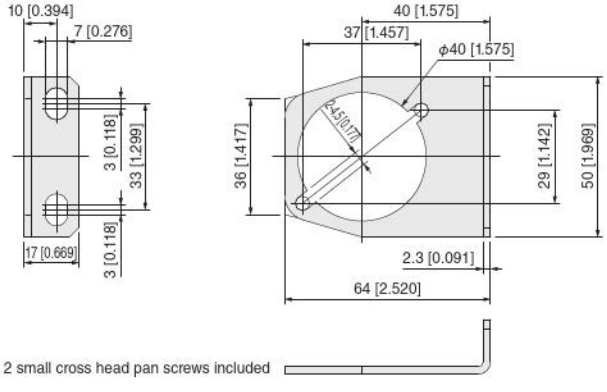

2 small cross head pan screws included

□30 [1.181] integrated pressure gauge

G1C-30·G4C-30

●This is a □30 [1.181] integrated pressure gauge exclusively for the FRZ series.

Symbols

Order Codes

G □ C – 30

Outer diameter
30 —— Outer diameter □30 mm [1.181 in.]

Range of pressure display
1 —— Standard specifications 1 MPa [145 psi]
4 —— Low pressure specifications 0.4 MPa [58 psi]

Pressure gauge

Specifications

Item / Model		G1C-30	G4C-30
Media		Air	
Connection type		O-ring seal, M3×0.5 (2 retaining screws)	
Maximum operating pressure	MPa [psi]	1.0 [145]	0.4 [58]
Operating temperature range (atmospheric and medium)	°C [°F]	5 to 60 [41 to 140] (non-condensation)	
Range of pressure display	MPa [psi]	0 to 1.0 [0 to 145]	0 to 0.4 [0 to 58]
Range of adjustable display band	MPa [psi]	0 to 1.0 [0 to 145]	0 to 0.4 [0 to 58]
Maximum settable width of display band	MPa [psi]	0.5 [73]	0.2 [29]
Accuracy (atmospheric and medium 5 to 35℃ [41 to 95°F])		F.S. ±4%	F.S. ±6%
Materials used in major parts	Case	Polybutylene terephthalate	
	Front cover	Polycarbonate	
	Bourdon tube	Brass	
Weight	kg [lb]	0.03 [0.066]	
Applicable models		**FRZB3□, FRZB4□, FRZB5□, FRZ3□, FRZ4□, FRZ5□, RZ3□, RZ4□, RZ5□**	

Pressure gauge dimensions (mm [in.])

G1C-30

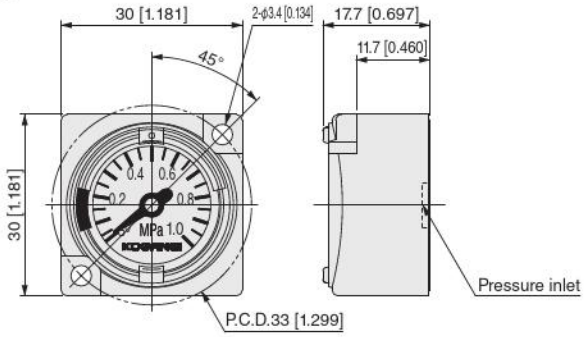

Two cross head tapping screws, one O-ring included

G4C-30

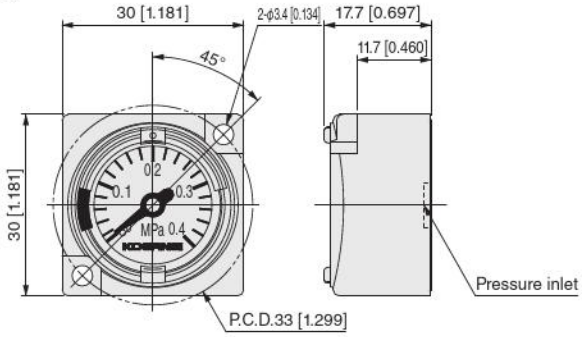

Two cross head tapping screws, one O-ring included

Refer to pages 116 and 140 for the handling instructions and precautions for the □30 [1.181] integrated pressure gauge.

Pressure gauge

G1-40·G3-40

Symbols

Order Codes

G □ – **40**

Outer diameter
40 —— Outer diameter 40 mm [1.575 in.]

Range of pressure display
1 —— Standard specifications 1 MPa [145 psi]
3 —— Low pressure specifications 0.3 MPa [44 psi]

Pressure gauge

Specifications

Item / Model		G1-40	G3-40
Media		Air	
Port size		R1/4 (M5×0.8)	
Range of pressure display	MPa [psi]	0 to 1.0 [0 to 145]	0 to 0.3 [0 to 44]
Accuracy		F.S. ±3%	
Outer diameter	mm [in.]	40 [1.575]	
Maximum operating pressure	MPa [psi]	0.93 [135]	0.25 [36]
Operating temperature range (atmospheric and medium)	℃ [°F]	5 to 60 [41 to 140] (non-condensation)	
Weight	kg [lb]	0.09 [0.198]	
Material	Case	ABS	
	Stock	Brass	
	Bourdon tube	Brass	

Pressure gauge dimensions (mm [in.])

G1-40
G3-40

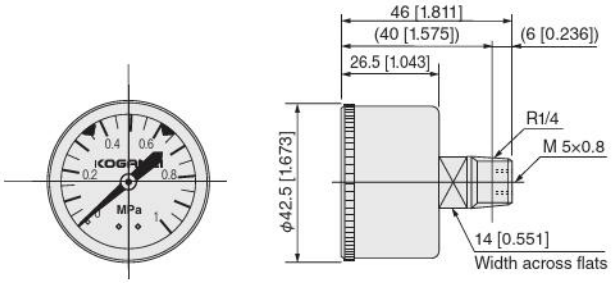

Handling Instructions and Precautions

NOTE Pressure gauges are precision devices. Be careful of shock and vibrations.

Mounting and piping

When doing the installation and piping, do not grip the body of the pressure gauge while tightening it. Tightening must be done by placing a wrench on the square section of the pipe connection port. When mounting the pressure gauges to a pressure port plate with Rc1/4, tighten them to 3.0 to 5.0 N·m [2.213 to 3.688 ft·lbf].

Preset marker

The preset markers can be set. Rotate the cover ring to first set the low-pressure side and then to set the high-pressure side.

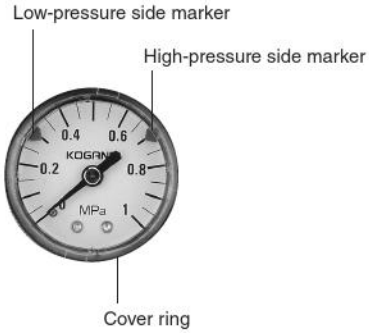

Pressure gauge

G1S-40·G3S-40

● These are the stainless steel specifications for the bourdon tube pressure gauges.

Symbols

Order Codes

G □ S – 40

Outer diameter
40 —— Outer diameter 40 mm [1.575 in.]

Range of pressure display
1 —— Standard specifications 1 MPa [145 psi]
3 —— Low pressure specifications 0.3 MPa [44 psi]

Pressure gauge

Specifications

Item / Model	G1S-40	G3S-40
Media	Air, N_2, O_2, CO_2, He, Ar	
Port size	R1/4	
Range of pressure display MPa [psi]	0 to 1.0 [0 to 145]	0 to 0.3 [0 to 44]
Accuracy	F.S. ±2.5%	
Outer diameter mm [in.]	42.5 [1.673]	
Maximum operating pressure MPa [psi]	0.93 [135]	0.25 [36]
Operating temperature range ℃ [°F]	5 to 60 [41 to 140] (non-condensation)	
Weight kg [lb]	0.091 [0.201]	

Material

Name	Materials
Case	SPCC (black paint)
Stock	SUS316
Bourdon tube	SUS316
Transparent cover	Plastic (PC)

Pressure gauge dimensions (mm [in.])

● **G1S-40**
Standard specifications
1 MPa [145 psi]

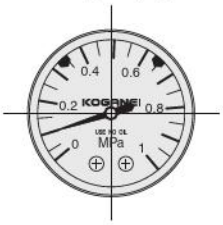

● **G3S-40**
Low pressure specifications
0.3 MPa [44 psi]

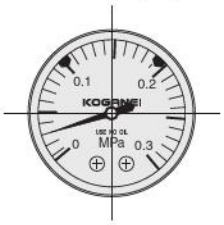

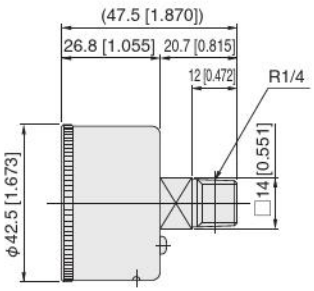

Handling Instructions and Precautions

NOTE Pressure gauges are precision devices. Be careful of shock and vibrations.

Mounting and piping

When doing the installation and piping, do not grip the body of the pressure gauge while tightening it. Tightening must be done by placing a wrench on the square section of the pipe connection port. When mounting the pressure gauges to a pressure port plate with Rc1/4, tighten them to 3.0 to 5.0 N·m [2.213 to 3.688 ft·lbf].

Preset marker

The preset markers can be set. Rotate the cover ring to first set the low-pressure side and then to set the high-pressure side.

Digital pressure switch

Specifications

Item / Type		Standard / High pressure type
Model name		**GS620**
Pressure type		Gauge pressure
Rated pressure range		-0.100 to +1.000 MPa [-15 to +145 psi]
Range of the set pressure		-0.100 to +1.000 MPa [-15 to +145 psi]
Withstand pressure		1.5 MPa [218 psi]
Applicable media		Non-corrosive gas
Power supply voltage		12 to 24V DC±10% Ripple P-P10% or less
Power consumption		Normal: 720 mW or less (30 mA or less consumption current at power supply voltage of 24 V) ECO mode: STD 480 mW or less (20 mA or less consumption current at power supply voltage of 24 V); when FULL, 360 mW or less (15 mA or less consumption current at power supply voltage of 24 V)
Comparative output		NPN transistor, open collector • Maximum inrush current: 100 mA • Applied voltage: 30 V DC or less (between comparative output and 0 V) • Residual voltage: 2 V or less (at inrush current of 100 mA, with cable length within 2 meters [6.560 ft])
	Output operation	NO/NC selection by key operation
	Output mode	EASY mode, hysteresis mode, window comparator mode
	Response differential (hysteresis)	Smallest 1 digit (variable)
	Repeatability	±0.2%F.S. (within ±2digits)
	Response time	2.5 ms, 5 ms, 10 ms, 25 ms, 50 ms, 100 ms, 250 ms, 500 ms, 1000 ms, 5000 ms selectable by key operation
	Short protection	Provided
Display		4-digit + 4-digit 3-color LCD (Display refresh interval: 250 ms, 500 ms, or 1000 ms selectable by key operation)
	Display pressure range	-0.100 to +1.000 MPa [-15 to +145 psi]
Indicator light		Orange LED (Comparative output 1 operation indicator lamp, comparative output 2 operation indicator lamp: Lights when comparative output is ON)
Environmental resistance	Protective construction	IP40 (IEC)
	Operating ambient temperature	-10 to +50°C [14 to 122°F], when in storage: -10 to +60°C [14 to 140°F]
	Operating ambient humidity	35 to 85% RH (Non-condensation, non-freezing); when in storage: 35 to 85% RH
	Dielectric strength	1000 VAC for 1 minute, between entire charger and case
	Insulation resistance	50 MΩ or greater using 500 VDC megger, between entire charger and case
	Vibration resistance	Endurance 10 to 500 Hz, double amplitude 3 mm [0.118 in.], each direction XYZ for 2 hours (when mounted on a panel: endurance 10 to 150 Hz, double amplitude 0.75 mm [0.030 in.], each direction XYZ for 2 hours)
	Shock resistance	Endurance 100 m/s^2 (Approximately 10 G) Each direction (XYZ) 3 times
Temperature characteristics		Within ±1% F.S. (reference value at +20°C [68°F])
Pressure port		M5×0.8 female thread + R1/8 male thread
Material		Case: PBT (glass fiber reinforced), LCD: Acrylic, Pressure port: SUS303, Mounting screws: Brass (nickel plated), Switches: Silicone rubber
Connection type		Connector connection
Wiring length		Up to 100 m [328.0 ft] of 0.3 mm^2 [5.535 Cv] or higher cable
Weight		About 40 g [1.41 oz]
Accessories		2 m [6.560 ft] cable with connector: 1

Note: The following measurement condition applies unless specifically noted otherwise: Operating ambient temperature range = +20°C [68°F].

General precautions

Wiring

1. Always turn off power before doing wiring work.
2. Check fluctuation in the power source to confirm it does not exceed ratings before turning on power.
3. When using a power supply with a commercially available switching regulator, be sure to ground the power supply frame ground (F.G.) terminal.
4. When using devices that generate noise (switching regulator, inverter motor, etc.) in the vicinity where a pressure switch is mounted, be sure to connect a frame ground (F.G.) to the devices.
5. Avoid wiring in parallel to or in the same conduit with high-voltage lines and power lines. Such configurations can result in erratic operation due to induction.
6. Incorrect wiring can cause malfunctions.
7. After completing wiring work, check to make sure that all connections are correct.

Connections

Do not apply any stress directly to the cable outlet or connectors.

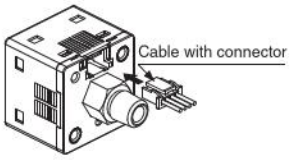

Mounting and piping

When mounting to a pressure port plate with Rc1/8, tighten them to 3.0 to 5.0 N·m [2.213 to 3.688 ft·lbf]. For details, refer to "Installing included options" on pages 115 and 139.

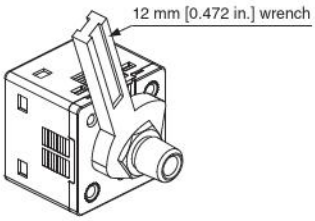

Other

1. The GS-6 series is designed for non-corrosive gases. Do not use with liquids or corrosive gases.
2. Use devices within their rated pressure ranges.
3. Do not apply pressure that exceeds the withstand pressure. Doing so can damage the diaphragm and make proper operation impossible.
4. Avoid use during the transitional state (0.5 seconds) when the power is turned on.
5. Avoid use in areas where there are large amounts of water vapor, dust, etc.
6. Take care to avoid direct contact with thinner and other organic solvents, water, oil, and fats.
7. Do not insert wires or other objects into pressure ports. Doing so can damage the diaphragm and make proper operation impossible.
8. Never use a needle or any other sharp pointed object to perform key operations.

RUN mode

This is the normal operation mode.

Setting item	Description
Threshold value setting	The ON/OFF threshold value can be changed directly by simply using the UP and DOWN keys.
Zero adjust function	When the pressure port is open to atmosphere, the pressure value display is forced to show zero.
Key lock function	Locks out key operations.
Peak/bottom Hold function	Displays fluctuating pressure peak value and bottom value. The peak value is shown on the main display, while the bottom value is shown on the sub-display.

Menu setting mode

1. Holding down the mode key for two seconds while in the RUN mode changes to the menu setting mode.
2. Holding down the mode key while a setting operation is in progress will change to the RUN mode. At that time, settings of altered items will be applied.

Setting item	Description
Output mode settings for comparative output 1	Specifies the comparative output 1 output mode.
Output mode settings for comparative output 2	Specifies the comparative output 2 output mode.
NO/NC switching	Specifies normal open (NO) or normal close (NC).
Response time setting	Sets the response time. Response time can be selected from 2.5ms, 5ms, 10ms, 25ms, 50ms, 100ms, 250ms, 500ms, 1000ms, and 5000ms.
Main display color switching	Changes the display color of the main display. Either of the following color combinations can be set for output ON/OFF: red/green or green/red. Always red or always green can also be set.
Switching between units (high pressure type only)	Switches the pressure unit (MPa or kPa).

Remarks: For details about each mode, function, and value, refer to the instruction manual that comes with the product.

Input/output circuits and connections

Input/output circuit diagrams

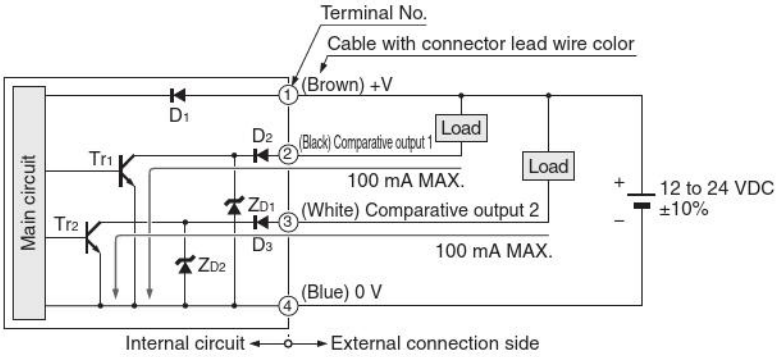

Symbols D_1 to D_3 : Power supply reverse connection protection diodes
Z_{D1} and Z_{D2} : Zener diode for absorbing surge voltage
T_{r1} and T_{r2} : NPN output transistor

Terminal layout diagram

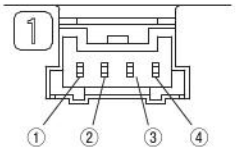

Terminal No.	Name
①	+V
②	Comparative output 1
③	Comparative output 2
④	0 V

Order Codes

GS6 [ ]

Digital Pressure switch

Operating pressure range
20: High pressure type -0.100 to +1.000 MPa [-15 to +145 psi]

Dimensions (mm [in.])

GS620

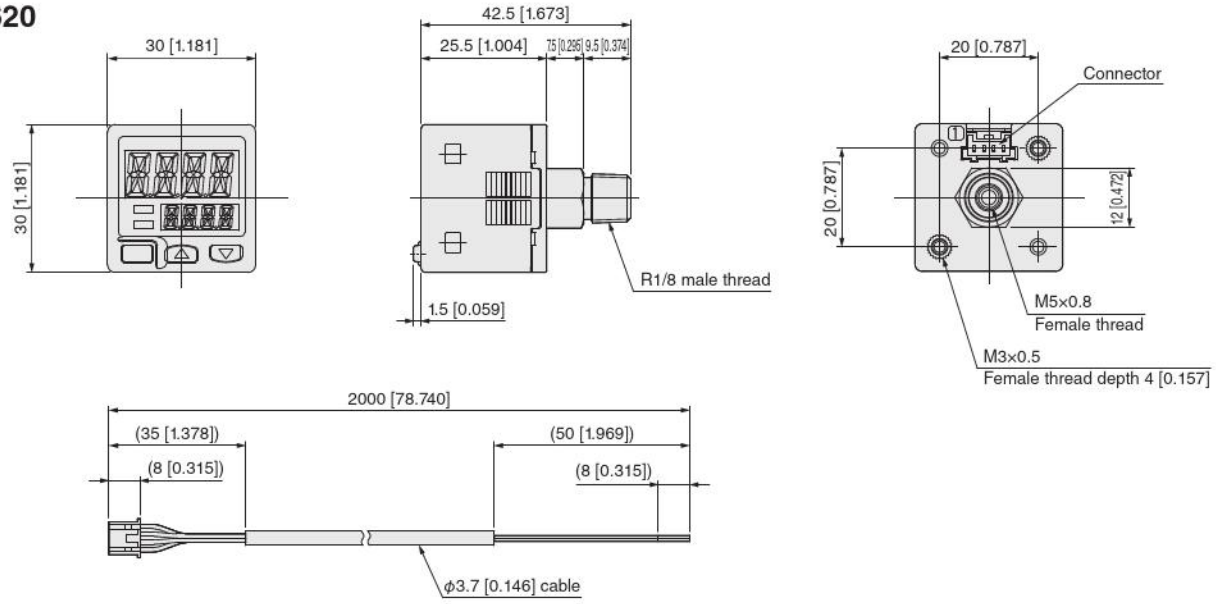

Pressure gauge with built-in switch

GS1-50

- Set pressure and working pressure displayed by a single pressure gauge. Panel mounting is also supported for easy centralized control and management from the control panel.
- Equipped with an indicator as standard, allowing confirmation of switch operation. In addition to the standard grommet (lead wire) type, a DIN connector type is also available as an option.

Symbols

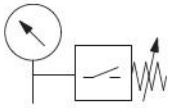

Order Codes

□ - **GS1-50** □ - □

Wiring type
Blank — Lead wire type
T — with DIN type connector

Voltage
AL — for AC100V, AC200V
DL — for DC24V

Pressure gauge with built-in switches (outer diameter 50 mm [1.969 in.])

Non-ion specifications
Blank — Standard specifications
NCU — Non-ion specifications

Remarks: Products with built-in AC contact protection circuits (external surge absorption elements) can also be manufactured. Consult your nearest Koganei sales office for details.

Specifications

Item			Model: GS1-50
Media			Air
Maximum operating pressure		MPa [psi]	0.83 [120]
Pressure gauge specifications	Operating temperature range (atmospheric and medium)	°C [°F]	5 to 60 [41 to 140]
	Range of pressure display	MPa [psi]	0 to 1.0 [0 to 145]
	Indicator accuracy		F.S. ±3%
Switch specifications	Range of pressure adjustment Note 2	MPa [psi]	0.1 to 0.83 [15 to 120]
	Pressure adjustment pointer error Note 1, Note 3	MPa [psi]	±0.05 [7]
	Repeatability accuracy Note 3	MPa [psi]	±0.05 [7] (5 to 45 °C [41 to 113°F])
	Response differential	MPa [psi]	0.07 [10] or less
	Contact method		Microswitch a contact points (NO)
	Wiring type	Standard	Lead wire type length: About 500 mm [19.685 in.] (UL1007 AWG22)
		Options	DIN type connector
	Indicator		Standard equipment is LED for DC and neon lamps for AC
Shock resistance		m/s² [G]	9.8 m/s² [1]
Mounting direction			Unrestricted
Weight		kg [lb]	0.17 [0.375] (0.19 [0.419] with DIN type connector)
Material		Main unit	Die cast aluminum
		Case	SPCC
		Stock	Brass
		Bourdon tube	Brass

Note 1: Specifications at pressure increase.
2: Set the pressure so that the difference between the set pressure and the supply pressure is 0.1 MPa [15 psi] or more.
3: Pressure adjustment pointer error and repeatability error may accumulate. (Maximum ±0.1 MPa [15 psi]) Be careful when using this.

Microswitch rating

A

Operating current range \ Rated voltage		DC30V	AC125V	AC250V
Inductive load	Continuous	0.05 to 0.1	0.01 to 0.1	0.01 to 0.05
	Inrush	0.5 MAX.	0.5 MAX.	0.2 MAX.
Non-inductive load		0.01 to 0.5	0.01 to 0.3	0.01 to 0.2

Dimensions of pressure gauge with built-in switch (mm [in.])

GS1-50

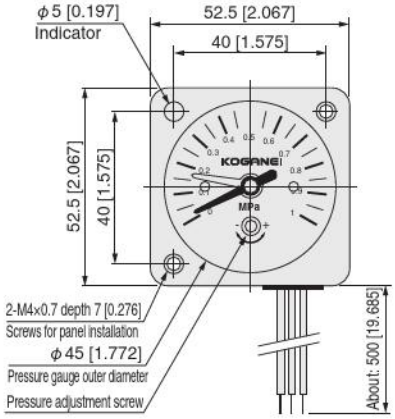

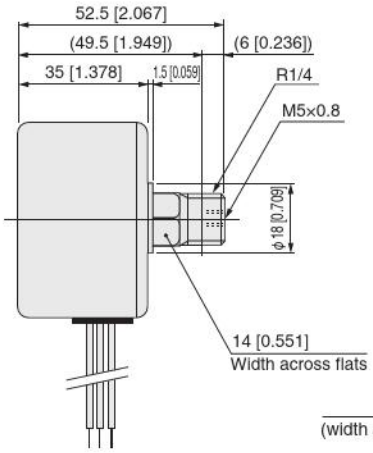

● with DIN type connector

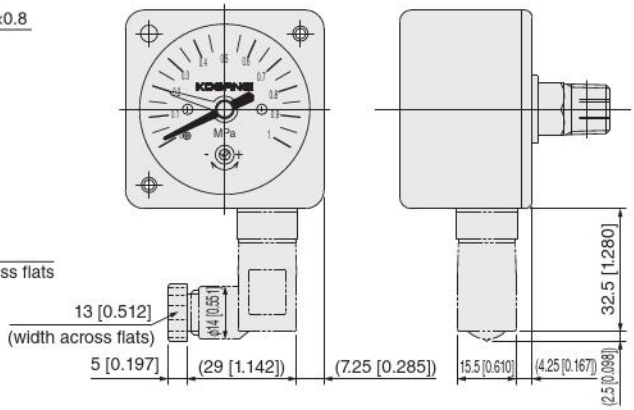

Pressure gauge with built-in switch

Mounting and piping

1. The mounting position is unrestricted. However, when installing the product between a valve and an actuator or in other situations where pressure pulsations are severe, install a throttling mechanism or similar device. If the installation is in a location subject to strong vibrations, consult Koganei.
2. When doing the installation and piping, do not grip the body of the pressure gauge while tightening it. Tightening must be done by placing a wrench on the hex section of the pipe connection port. When mounting the pressure gauges to a pressure port plate with Rc1/4, tighten them to 3.0 to 5.0 N·m [2.213 to 3.688 ft·lbf].

Pressure adjustment

Turn the pressure adjustment screw to set the pressure adjustment pointer (red) to the set pressure. Turning the pressure adjustment screw left (counterclockwise) sets the pressure to the high pressure side, and turning it right (clockwise) sets the pressure to the low pressure side. When the air pressure rises to the set pressure, the switch switches, and when the pressure drops, it returns to a position within 0.07 MPa [10 psi] (response differential) of the position where it switched during the rise.

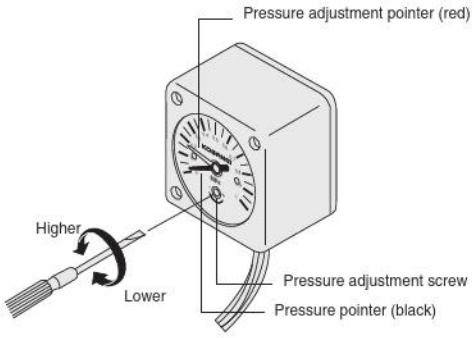

NOTE

1. To adjust the pressure, insert a precision screwdriver through the slit in the cap without removing the cap, and directly turn the pressure adjustment screw.
2. The pressure adjustment pointer has an indication error of ±0.05 MPa [7 psi]. For fine adjustment, apply compressed air at the set pressure and perform the adjustment while confirming the switch operation.

General precautions

1. Use this product for checking the supply pressure. Therefore, if you intend to use it in a precision control circuit, consult your nearest Koganei sales office.
2. If the installation location is subject to temperatures of 45°C [113°F] or higher, or humidity of 50% or higher, the performance of the switch may deteriorate. If you intend to use it in such conditions, consult your nearest Koganei sales office.
3. Since microswitches are used as the contact method, contact failure may occur if silicon gas is present in the atmosphere. If there are silicon products such as silicon oil around this product, use a contact protection circuit (for AC) or remove the source of silicon gas.

Wiring instructions

Be careful when connecting the NC and NO contacts and lead wires (terminal numbers for connectors). The numbers in ( ) in the figure indicate the terminal numbers, and the ⬆ indicates the direction of pressure increase. The indicator turns off when the pressure exceeds the set pressure and turns on as an alarm when the pressure falls below the set pressure.

●24 VDC

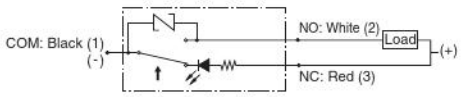

●100 VAC, 200 VAC

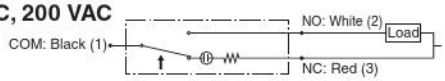

●Wiring instructions for DIN type connectors

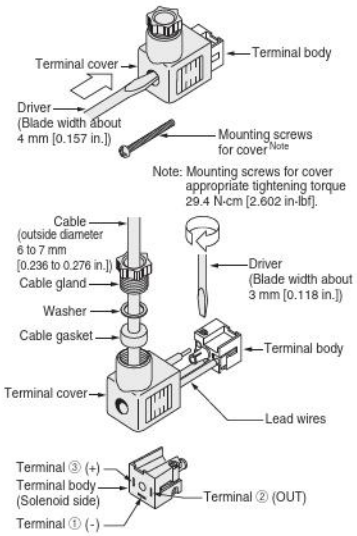

Strip the insulation from the lead wires and insert them into the terminal body connection terminals until they are fully seated. Tighten the screws with a screwdriver to secure the connection. When doing this, gently pull on the lead wires to confirm that they cannot be pulled out.

Switch setting method and operation details

Setting example: You want to switch the switch when the pressure drops to 0.3 MPa [44 psi] or below.

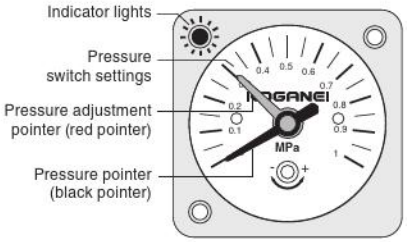

●24 VDC

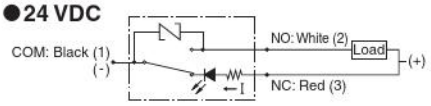

●100 VAC, 200 VAC

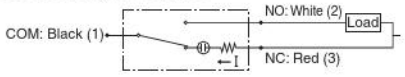

In atmospheric conditions, set the pressure adjustment pointer (red pointer) to 0.3 MPa [44 psi]. At this time, the internal switch is on the NC side as shown in the circuit diagram above, and the indicator lights.

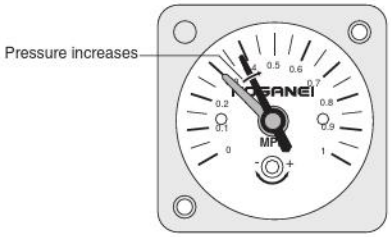

●24 VDC

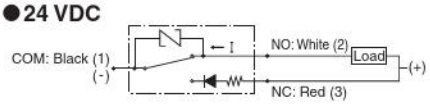

●100 VAC, 200 VAC

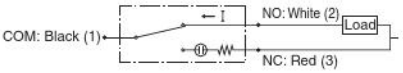

When pressure is supplied and pressure rises, the internal switch switches to the NO side near the pressure regulator indicator (red needle) position, as shown in the circuit diagram above, and the load current flows and the indicator turns off. This position is designated as A. At this switching position A, the pressure gauge pointer error ±0.05 MPa [7 psi] and the repeatability accuracy ±0.05 MPa [7 psi] are accumulated, resulting in a maximum error of ±0.1 MPa [15 psi] relative to the pressure gauge pointer (black needle).

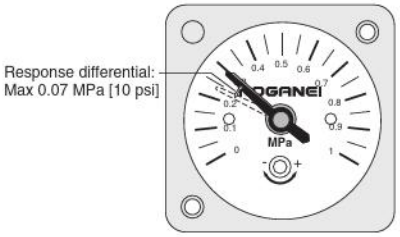

When the pressure drops and the pressure indicator (black needle) drops below position A, the internal switch switches to the NC side within the response differential pressure (maximum 0.07 MPa [10 psi]). Confirm the switching position at this time and adjust the pressure adjustment pointer (red pointer). Note that the NC side cannot be used as a load contact. Control the B-contact by using a relay or similar device activated by the NO side being OFF.

●About chemical resistance

The chemicals in the following table degrade plastic parts. They may damage the various filter bowls, holders, and the front cover of the pressure gauges, and cause an accident.
Do not allow the following chemicals into the compressed air or the environment around the product, do not allow them to contact the product. This does not mean that they are chemically resistant to all chemicals not listed below.

Type	Classification	Chemical name	Application example
Inorganic compound	Acid	Hydrochloric acid, sulfuric acid, nitric acid, fluorine, phosphoric acid, chromic acid	Coating processing, acid degreasing, and pickling of metals
	Alkali	Caustic soda, caustic potash, hydrated lime, ammonia water, sodium carbonate	Alkaline degreasing of metals
	Inorganic salt	Sodium sulfide, potassium nitrate, potassium dichromate, sodium nitrate	Dyes, rust inhibitor
Organic compounds	Aromatic hydrocarbons	Benzene, toluene, xylene, ethylbenzene, styrene	Paint thinner (benzene, toluene, xylene)
	Chlorinated aliphatic hydrocarbons	Methyl chloride, ethylene chloride, methylene chloride, acetylene dichloride, chloroform, trichlene, tetrachloroethylene, carbon tetrachloride	Organic solvents for metal cleaning (trichlene, tetrachloroethylene, carbon tetrachloride)
	Chlorinated aromatic hydrocarbons	Chlorobenzene, dichlorobenzene, benzene hexachloride (BHC)	Agricultural chemicals
	Petroleum components	Solvent naphtha, gasoline	Fuel
	Alcohol	Methyl alcohol, ethyl alcohol, cyclohexanol, benzyl alcohol	Anti-freezing agents
	Phenol	Carbolic acid, cresol, naphthol	Antiseptic solutions
	Ether	Methyl ether, methyl ethyl ether, ethyl ether	Brake fluid additive, detergent
	Ketones	Acetone, methyl ethyl ketone, cyclohexane, acetophenone	Cleaning solutions
	Carboxylic acid	Formic acid, acetic acid, butyl acid, acrylic acid, oxalic acid, phthalic acid	Dyes, aluminum processing solution (oxalic acid), paint base (phthalic acid)
	Phthalic acid ester	Dimethyl phthalate (DMP), diethyl phthalate (DEP), dibutyl phthalate (DBP), dioctyl phthalate (DOP)	Lubricants, synthetic hydraulic fluids, corrosion resistant additives, synthetic resin plasticizer
	Oxyacid	Glycolic acid, lactic acid, malic acid, citric acid, tartaric acid	Food preservatives, acidifiers
	Nitro compounds	Nitromethane, nitroethane, nitroethylene, nitrobenzene	Paint medium, explosives
	Amine	Methylamine, dioctylamine, ethylamine, aniline, acetanilide	Brake fluid additive
	Nitrile	Acetonitrile, acrylonitrile, benzonitrile	Nitrile rubber materials

Bowl material Oil resistance comparison table

Testing Procedure
A dumbbell-shaped multi-purpose test specimen (JIS K 7139: 2009) fixed under a certain bending stress is contacted with a reagent under the same conditions, and the condition of the test specimen is checked after a certain period of time.

Classification	Manufacturer/Reagent Name		PCT (Polycyclohexylene-di-methylene terephthalate)	PA (Nylon)	PC (Polycarbonate)
Alcohol	Isopropyl alcohol		○	×	×
Water-soluble cutting oil (Dilution ratio 10 times)	Nippon Quaker Chemical, Ltd.	Micro Cut 3653-N	○	○	○
		Micro Cut SRK-F	○	○	△
		Micro Cut 700RF	○	○	×
	Neos Corporation	Y1100P	○	○	○
		Y-103F	○	○	△
	Idemitsu Kosan Co., Ltd.	Daphne Alpha Cool EW	○	○	×
	NS Lubricants Co., Ltd.	C-3109HL	○	○	○
		RISCUT SY-64	○	○	×
Non-water-soluble cutting oil	Yushiro Chemical Industry Co., Ltd.	Yushiron Cut Arbus BZ322	○	○	△

The names of reagents in the table are registered trademarks of their respective companies.

PC may experience environmental stress cracking depending on the type of cutting fluid. Both PA and PCT tend to have strong resistance to cutting oils, but PCT is more suitable for environments where alcohol is used.

Note: This is under Koganei measurement conditions and does not guarantee performance.
If you have any questions, please contact our overseas department.

Guideline
○: No cracks (from none to minor effect)
△: Cracks present (small)
Conditions may hasten failure
×: Cracks present (large)
May break down in a short period of time

Limited Warranty

KOGANEI CORP. warrants its products to be free from defects in material and workmanship subject to the following provisions.

Warranty Period The warranty period is 180 days from the date of delivery.

Koganei Responsibility If a defect in material or workmanship is found during the warranty period, KOGANEI CORP. will replace any part proved defective under normal use free of charge and will provide the service necessary to replace such a part.

Limitations

- This warranty is in lieu of all other warranties, expressed or implied, and is limited to the original cost of the product and shall not include any transportation fee, the cost of installation or any liability for direct, indirect or consequential damage or delay resulting from the defects.
- KOGANEI CORP. shall in no way be liable or responsible for injuries or damage to persons or property arising out of the use or operation of the manufacturer's product.
- This warranty shall be void if the engineered safety devices are removed, made inoperative or not periodically checked for proper functioning.
- Any operation beyond the rated capacity, any improper use or application, or any improper installation of the product, or any substitution upon it with parts not furnished or approved by KOGANEI CORP., shall void this warranty.
- This warranty covers only such items supplied by KOGANEI CORP. The products of other manufacturers are covered only by such warranties made by those original manufacturers, even though such items may have been included as the components.

The specifications are subject to change without notice.

URL http://www.koganei.co.jp

E-mail: overseas@koganei.co.jp

KOGANEI

KOGANEI CORPORATION

OVERSEAS DEPARTMENT
3-11-28, Midori-cho, Koganei City, Tokyo 184-8533, Japan
Tel: (+81)42-383-7271 Fax: (+81)42-383-7276

KOGANEI INTERNATIONAL AMERICA.INC.
48860 Milmont Drive, suite 108C, Fremont, California 94538
Tel : 1-510-744-1626 Fax : 1-510-744-1676

SHANGHAI KOGANEI INTERNATIONAL TRADING CORPORATION
RM2601-2602, Tongda Venture Building No.1, Lane 600, Tianshan Road,
Shanghai, China (200051)
Tel: 86-21-6145-7313 Fax: 86-21-6145-7323

TAIWAN KOGANEI TRADING CO.,LTD
Rm. 2, 16F., No88, Sec. 2, Zhongxiao E. Rd., Zhongzheng Dist., Taipei City 100,
Taiwan(ROC)
Tel: 886-2-2393-2717 Fax: 886-2-2393-2719

KOGANEI KOREA CO.,LTD
A-3001, Heungdeok IT Valley Bldg., Heungkeok 1-ro, 13, Giheung-gu, Yongin-si, Gyeonggi-do,
446-908, KOREA
Tel: 82-31-246-0414 Fax: 82-31-246-0415

KOGANEI (THAILAND) CO.,LTD
555, Rasa Tower 1, 11th Fl.,Unit 1107 and 1108, Phaholyothin Road, Chatuchak,
Chatuchak, Bangkok 10900
Tel: +66 (0) 2513-1228-31 Fax: +66 (0) 2513-1232

KOGANEI AUTOMATION (MALAYSIA) SDN, BHD.
Suite 29-2, Level 29, Menara 1MK, No.1, Jalan Kiara, Mont Kiara
50480, Kuala Lumpur, Malaysia
Tel: 60-12-537-7086

KOGANEI ASIA PTE. LTD.
69 Ubi Road 1, #05-18 Oxley Bizhub Singapore 408731
Tel: 65-6293-4512 Fax: 65-6293-4513

5/'25 AB
©KOGANEI CORP. PRINTED IN JAPAN