KOGANEI
http://www.koganei.co.jp

Catalog No. BK-V0019

NEW Products

Solenoid Valves F Series

New Easy Assembly Type Manifold (internal wiring connector type) for the F10/F15! Now easier to use.

Redesigned Solenoid Valves F18 Series!

Solenoid shared with F Series for low wattage and shorter total length. Tandem solenoid specifications, IP specifications, and serial transmission type added.

SOLENOID VALVES F SERIES

F10, F15, F18 SERIES

Contents

Features — 2
Variations — 8
Energy Saving Proposals Using the F Series of Solenoid Valves — 13
Materials for Selecting F Series Solenoid Valves and Air Cylinders — 14
Safety Precautions — 16
Operating Principles and Indicated Codes — 19
Handling Instructions and Precautions — 21
Exploded Views of Split Type Manifold and Easy Build Type Manifold — 30
Serial Transmission Type Product Configuration — 41
Serial Transmission Type List of Specifications — 42

Solenoid valve F10 Series — 59
List of Specifications — 60
Order Codes — 66
Dimensions — 118

Solenoid valve F15 Series — 155
List of Specifications — 156
Order Codes — 162
Dimensions — 216

Solenoid valve F18 Series — 253
List of Specifications — 254
Order Codes — 259
Dimensions — 278

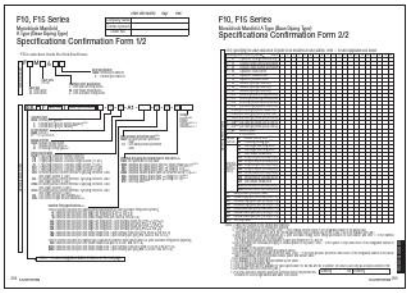

F Series Specification Confirmation Form — 291

New release

Solenoid Valves F Series Easy Assembly Type

Easy Assembly Type Manifold

A new connector type manifold has been added to the F10/F15 series solenoid valves.

This allows for easy addition, removal, and assembly, as the internal wiring is connected simply by linking the manifold bases.

Direction conversion is possible without connector disassembly. A knob can be turned 90 degrees to change the direction of the wiring.

Negative common specifications type can also be selected.

Patent pending

Direction convertible by 90 degrees

Flat cable connector
D-sub connector

Internal wiring connector

Connecting rod

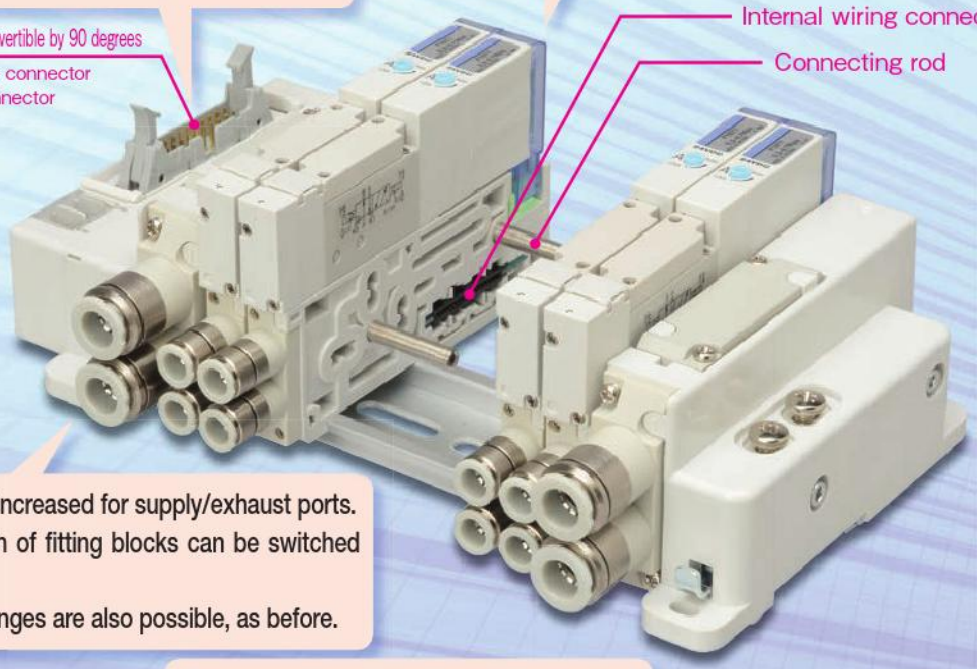

The degree of freedom has been increased for supply/exhaust ports.
With one-side piping, the position of fitting blocks can be switched between left and right.
Base piping and direct piping changes are also possible, as before.

An optional stop valve can be selected for the non-plug-in type.

Connector wiring

For both single wiring and double wiring, simply connecting a valve base assembly enables the valve signals on the wiring side to be assigned in order. No wiring work is required at all.

Internal wiring example

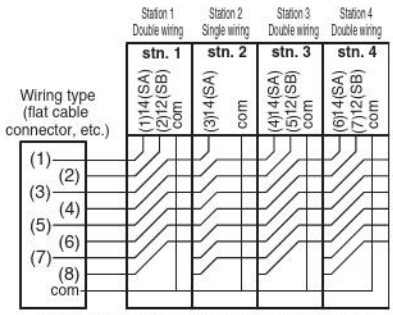

(with single wiring and double wiring mixed)

Internal wiring connectors

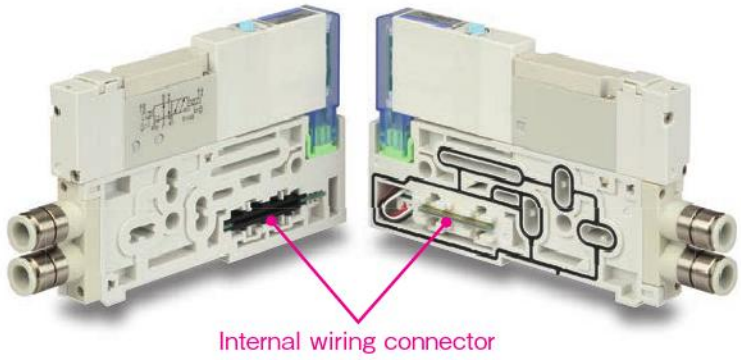

Method for adding and removing manifolds (see page 36 and page 37 for details)

① Remove the connecting screw from the right end block. (If there is a DIN rail, loosen the DIN rail fixing screw.)

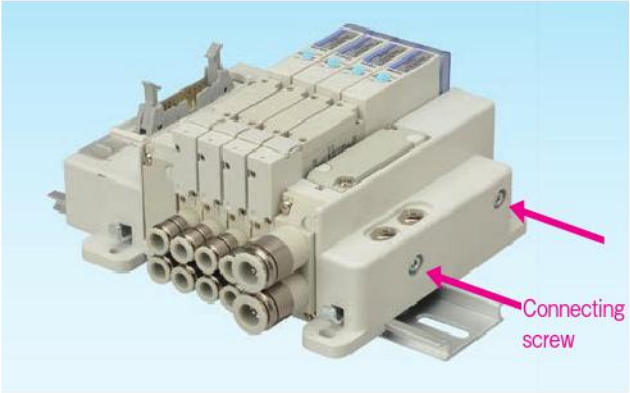

②Disassemble the manifold into two sides while pushing the lever on the DIN bracket. (only when there is a DIN bracket)

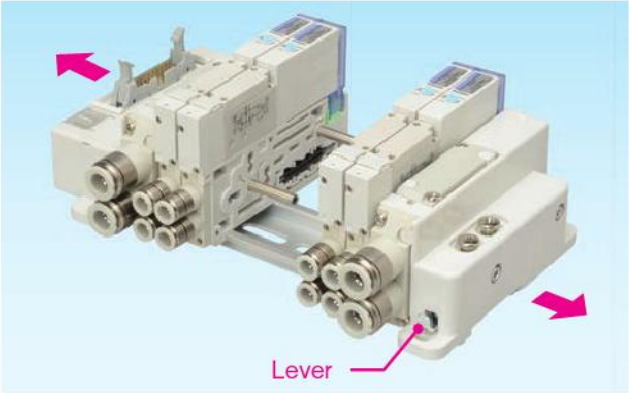

③ Remove the valve from the connecting rod.

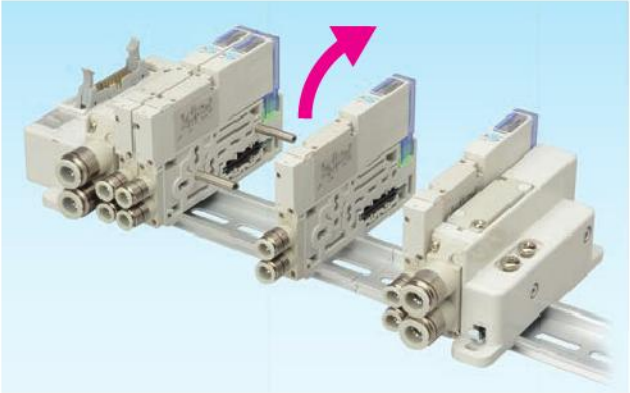

④When adding:Install the connecting rod included with the valve to add, and insert the valve to add.

⑤When removing:Remove the valve, and switch the connecting rod to the new length.

⑥Return the right end block to its original position and tighten the connecting screw. Then, tighten the DIN rail fixing screw.

Two installation methods available

Select either DIN rail mounting or direct mounting (using the four main unit mounting holes).

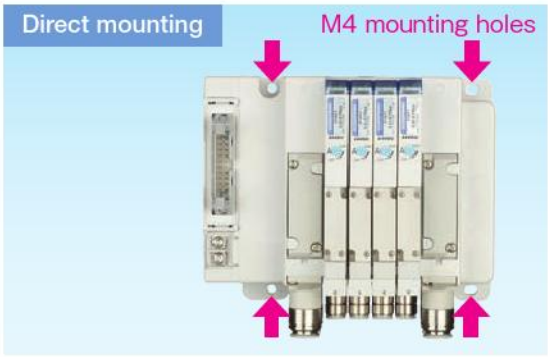

The intermediate piping block can now be selected when ordering.

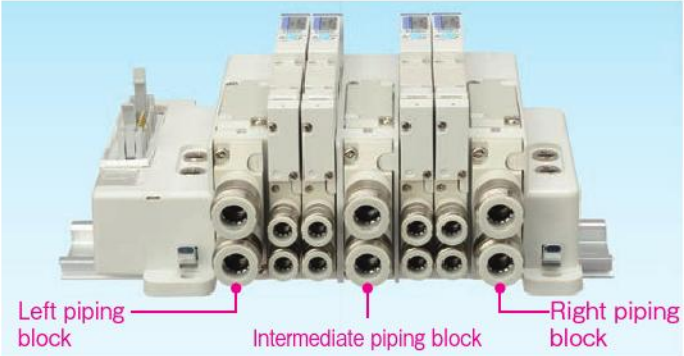

- Reduce risk of flow rate shortage.
- Three different air pressures can be supplied by using port isolators.

Solenoid Valves F Series

Environmentally friendly RoHS Compliant product!

The F Series is the Result of a Focus on Usability.

1 Single or double dual use valve

●With the F series 2-position valves, you can use a manual override to select either the single solenoid valve or the double solenoid valve function. Note: A dedicated single solenoid valve is also available.

Single solenoid position

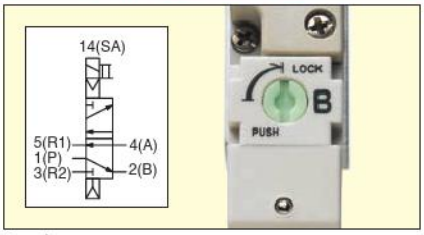

Double solenoid position

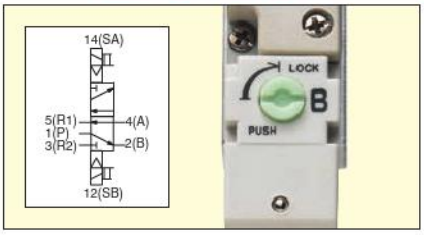

※2-position valve (Excluding T0 type)

2 Employs dual use fittings

●Koganei's unique dual use fittings can be connected to two different types of tubes with differing outer diameters.
●No need to waste time selecting fittings based on the tube size.

Dual use fitting

※Mountable tube sizes:
F10 series: ϕ4 and ϕ6
F15 series: ϕ6 and ϕ8
F18 series: ϕ8 and ϕ10
Note: A single use fitting can also be selected.

Connecting a ϕ6 tube

Connecting a ϕ4 tube

The same fitting as in the left photograph

3 Allows the fitting block to be changed for either base piping or direct piping

●Since the direction of the fitting blocks can be changed after purchase, the user is free to change the piping direction.

(Excluding monoblock manifold F type, and PC board manifold F type)

Base piping

Direct piping

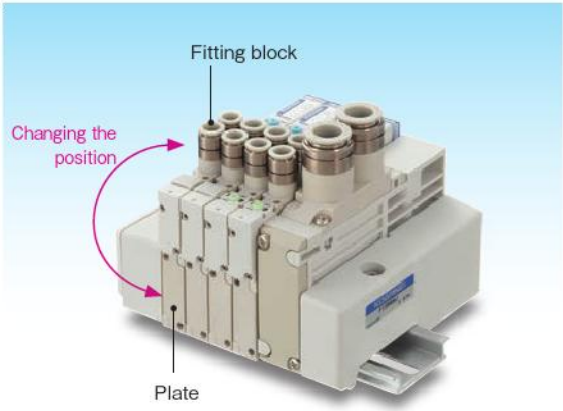

Caution Before use, be sure to read the "Safety Precautions" on p.16.

4 Easy assembly type manifold has newly been added (F10/F15)

●This allows for easy addition, removal, and assembly, as the internal wiring is connected simply by linking the manifold bases.

5 The intermediate piping block can now be selected when ordering (F10/F15 easy assembly type manifold)

●The easy assembly type manifold (F10/F15) supports large flow rate consumption. Three different air pressures can be supplied by setting two port isolators.

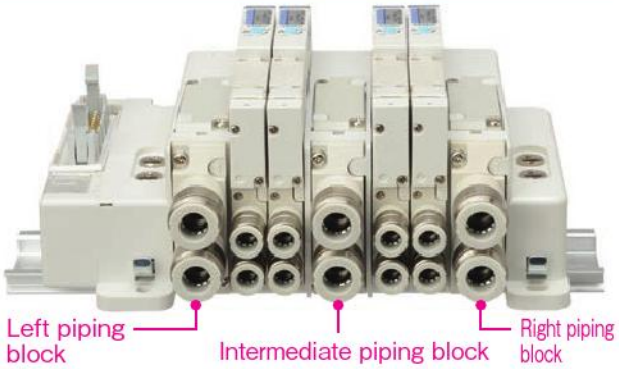

6 Color identification for positive/negative common (F10/F15 easy assembly type manifold)

●The F10/F15 easy assembly type manifold enables color identification of specifications via a small window on the solenoid side of the valve base, which indicates the positive common, negative common, single wiring, and double wiring.

Patent pending

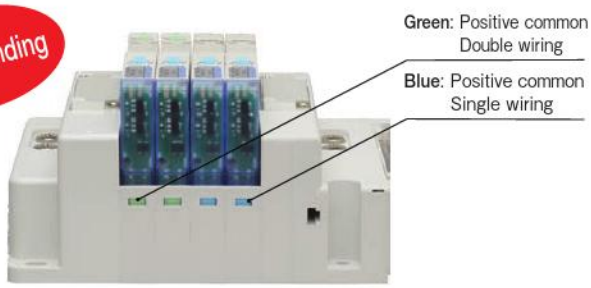

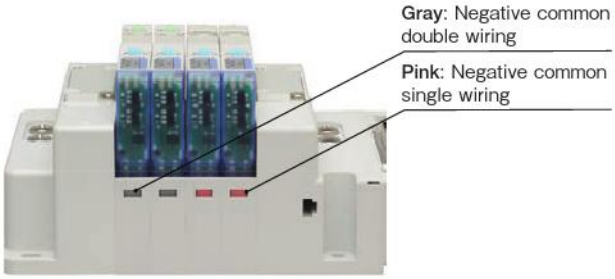

7 Easy replacement of wiring blocks (F10/F15 easy assembly type manifold)

① Loosen the two screws of the wiring block assembly.

② Remove the connector from the piping block left.

③ Insert the connector to the piping block left.

④ Tighten the two screws of the wiring block assembly to complete the procedure.

8 Tandem 3-port valve (4-position)

- Two 3-port valve functions in one valve body.
- Using F series valves as an air-operated valve or for single-acting cylinder control saves space.
- Allows combined mounting with 5-port valve.

Also added to F18

Model	4 (A) side	2 (B) side	Symbol
F10 □ TA F15 □ TA NEW F18 □ TA	Normally closed (NC)	Normally closed (NC)	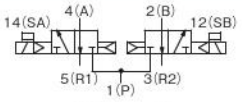
F10 □ TB F15 □ TB NEW F18 □ TB	Normally open (NO)	Normally open (NO)	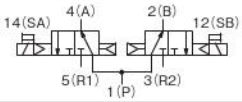
F10 □ TC F15 □ TC NEW F18 □ TC	Normally closed (NC)	Normally open (NO)	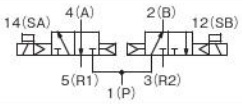

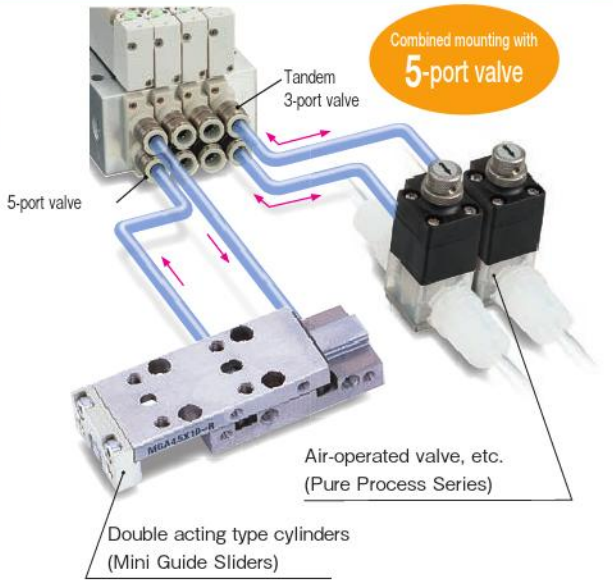

9 Wire-saving type provided for monoblock manifold (F10/F15)

- Wire-saving type is also available for monoblock manifold A and F types. Slim and compact.
- Wiring specifications for flat cable connector and D-sub connector can be selected.

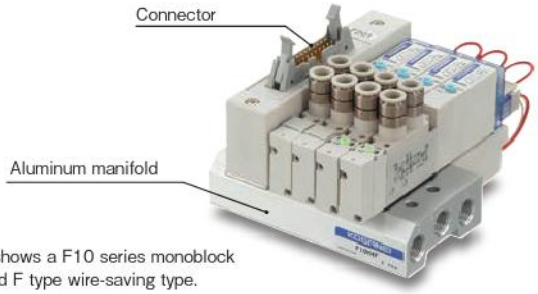

*Photo shows a F10 series monoblock manifold F type wire-saving type.

10 Stop valve (optional) (F10/F15 monoblock manifold/easy assembly type manifold)

- Enables replacement of valves without stopping operation of various devices and instrumentation lines.
- Stop valve enables the opening and closing of each unit's flow path without shutting off the main air supply.

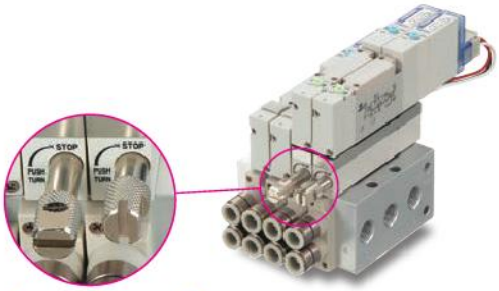

11 Back pressure prevention valve (optional) (F10/F15)

- Prevents back pressure problems caused when operating single acting cylinders, etc.

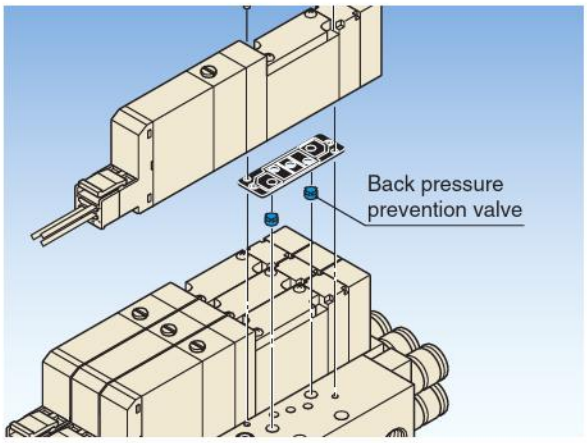

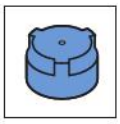

Back pressure prevention valve

Two back pressure prevention valves are mounted on the manifold side. This prevents cylinder malfunctions caused by the exhaust air from other valves.

Remark: Standard with F18 split manifolds.
Not provided with F18 monoblock manifolds.

12 Slim and compact

■Monoblock manifold F type (F10/F15)

*Photo shows F10 series.

13 Optional IP65 protective structure

●Waterproof seal has been adopted in the plug connector and solenoid to comply with the requirements for an IP65 protective structure. Supports a wide variety of environments.

Applicable product range
- ·Single valve unit
- ·Monoblock manifold A type
- ·Monoblock manifold F type
- ·Split Manifold Non-Plug-in Type
- ·Easy assembly type Non-Plug-in Type

Also added to F18

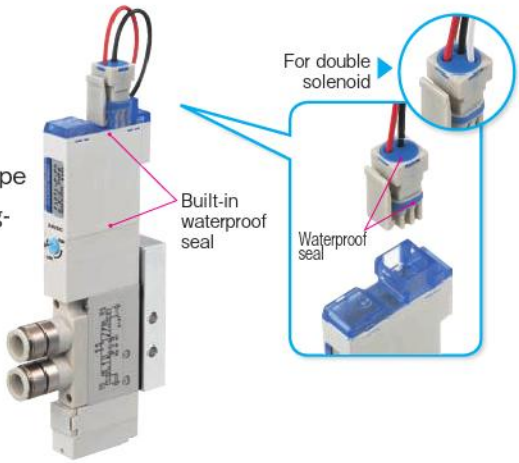

Definition of protective structure (from IEC60529)

The protective structure around an electrical device that prevents the infiltration of solid foreign material and water from outside.

Protection code (International Protection)

IP65

"Code 2" protection class for water infiltration[Note]
Does not receive any detrimental effect from direct jets of water in any direction.

"Code 1" protection class for solid foreign material
Dust does not infiltrate the inside.

Note: Cannot be used while submerged in water.

14 Support for various types of serial transmission (F10/F15/F18)

●Compatible devices with serial transmission manifold
- For OMRON B7A Link Terminal
- For CC-Link (16 outputs)
- For CC-Link (32 outputs)
- For DeviceNet (16 outputs)
- For DeviceNet (32 outputs)
- For CompoNet (16 outputs)
- For EtherCAT (16 outputs)
- For EtherCAT (32 outputs)
- For EtherNet/IP (16 outputs)
- For EtherNet/IP (32 outputs)

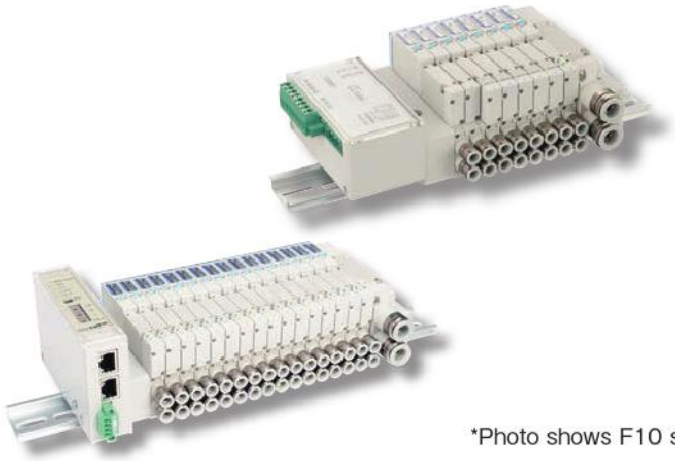

*Photo shows F10 series.

Product Range

Solenoid Valves F10 Series

- **Valve width:** 10 mm [0.394 in.]
- **Sonic conductance C:** 0.97 $dm^3/(s/bar)$ [Cv: 0.27]
- **Applicable cylinder bore sizes:** ϕ20 [0.787 in.] to ϕ50 [1.969 in.]

Solenoid Valves F15 Series

- **Valve width:** 15 mm [0.591 in.]
- **Sonic conductance C:** 2.05$dm^3/(s/bar)$ [Cv: 0.57]
- **Applicable cylinder bore sizes:** ϕ40 [1.575 in.] to ϕ80 [3.150 in.]

Solenoid Valvea F18 Series

- **Valve width:** 18 mm [0.709 in.]
- **Sonic conductance C:** 3.48$dm^3/(s/bar)$ [Cv: 0.97]
- **Applicable cylinder bore sizes:** ϕ50 [1.969 in.] to ϕ100 [3.937 in.]

Single Valve Unit (F10/F15/F18)

Valves can be used as single units by attaching inlet port blocks. Mounting brackets are also available.

Outlet port specifications

Series	With sub-base		For single valve unit or manifold use									
	Female thread		With female thread block			With dual use fitting block			With single use fitting block			
	Rc1/8 NPT1/8	Rc1/4 NPT1/4	M5 10-32 UNF	Rc1/8 NPT1/8	Rc1/4 NPT1/4	ϕ4 & ϕ6	ϕ6 & ϕ8	ϕ8 & ϕ10	ϕ4	ϕ6	ϕ8	ϕ10
F10	●		●			●			●	●		
F15	●			●			●			●	●	
F18		●			●			●			●	●

With fitting block

With female thread block

With A type sub-base

■ With mounting bracket

F10 Series Order codes Page 66
F10 Series Dimensions Page 118
F15 Series Order codes Page 162
F15 Series Dimensions Page 216
F18 Series Order codes Page 259
F18 Series Dimensions Page 278

Monoblock Manifold A Type (Base Piping Type) (F10/F15/F18)

This base piping type manifold offers easy maintenance and cost performance.
Replacing the outlet block enables its use as a direct piping type manifold.
Using a pre-wired common terminal plug connector greatly reduces wiring work.

With fitting block

With female thread block

■ Pre-wired common terminal plug connector

F10 Series Order codes Page 69
F10 Series Dimensions Page 121
F15 Series Order codes Page 166
F15 Series Dimensions Page 219
F18 Series Order codes Page 261
F18 Series Dimensions Page 281

Monoblock Manifold F Type (Direct Piping Type) (F10/F15/F18)

The direct piping type manifold offers excellent cost performance.
Using a pre-wired common terminal plug connector greatly reduces wiring work.

With fitting block

With female thread block

■ Pre-wired common terminal plug connector

F10 Series Order codes Page 72
F10 Series Dimensions Page 122
F15 Series Order codes Page 170
F15 Series Dimensions Page 221
F18 Series Order codes Page 263
F18 Series Dimensions Page 282

Monoblock Manifold A Type, Wire-Saving Type (Base Piping Type) (F10/F15)

Wire-saving type of monoblock manifold A type.

Wiring specifications include the flat cable connector mounting type and the D-sub connector mounting type.

With fitting block

With female thread block

F10 Series Order codes Page 76
F10 Series Dimensions Page 123
F15 Series Order codes Page 174
F15 Series Dimensions Page 222

Monoblock Manifold F Type, Wire-Saving Type (Direct Piping Type) (F10/F15)

Wire-saving type of monoblock manifold F type.

Wiring specifications include the flat cable connector mounting type and the D-sub connector mounting type.

With fitting block

With female thread block

F10 Series Order codes Page 78
F10 Series Dimensions Page 123
F15 Series Order codes Page 176
F15 Series Dimensions Page 222

PC Board Manifold (F10/F15)

A MIL type 20-pin flat cable connector is installed on the monoblock manifold to achieve both wiring savings and cost performance. Combined use of the PC wiring system and wiring specification -F201 allows for more effective wiring savings.

A type (Base piping type)

F type (Direct piping type)

F10 Series Order codes Pages 80 and 84
F10 Series Dimensions Page 125
F15 Series Order codes Pages 178 and 182
F15 Series Dimensions Page 224

Split Manifold Non-Plug-in Type (F10/F15/F18)

Enables easy addition or removal of manifold blocks. This system offers more flexibility in conforming to changes in specifications.

Manifold port with fitting block

Valve port with fitting block

Manifold port with female thread block

Valve port with female thread block

F10 Series Order codes Page 86
F10 Series Dimensions Page 126
F15 Series Order codes Page 184
F15 Series Dimensions Page 225
F18 Series Order codes Page 266
F18 Series Dimensions Page 283

Split Manifold Plug-in Type

Manifold conforms to reducing wiring work. Adding on wiring allows adding manifold units.
Combined use of the PC wiring system and wiring specification -F201 offers more effective wiring savings.

F10 Series Order codes Page 92
F10 Series Dimensions Page 128
F15 Series Order codes Page 190
F15 Series Dimensions Page 227
F18 Series Order codes Page 270
F18 Series Dimensions Page 284

Manifold port with fitting block

Valve port with fitting block

Manifold port with female thread block

Valve port with female thread block

Wiring Specifications

Flat cable connectortop surface (vertical) wiring type Note

Flat cable connector side surface (horizontal) wiring type Note

D-sub connector top surface (vertical) wiring type Note

D-sub connector side surface (horizontal) wiring type Note

Terminal block

Note: You can change the connector direction.

Photograph shows flat cable connector.

For the flat cable connector and D-sub connector, the no power supply terminal type is also available.

Caution: For the F18 series, neither the connector side surface (horizontal) wiring type nor the no power supply terminal type is available.

Remark: You can also select the wiring position (wiring block) for right-side mounting.

Split Manifold Serial Transmission Type (F10/F15/F18)

Integrated type

Stand-alone type

- For CC-Link
- For OMRON B7A Link Terminal
- For CompoNet
- For DeviceNet
- For EtherCAT
- For EtherNet/IP

※For details, see p. 42-44.

F10 Series Order codes Page 96
F10 Series Dimensions Page 137
F15 Series Order codes Page 194
F15 Series Dimensions Page 236
F18 Series Order codes Page 274
F18 Series Dimensions Page 287

For EtherCAT
For EtherNet/IP

Remark: You can also select the wiring position (transmission block) for right-side mounting.

Easy Assembly Type Manifold Non-Plug-in Type (F10/F15)

Enables easy addition or removal of manifold blocks. Direct mounting (mounting without DIN rail) is selectable.

F10 Series Order codes Page 100
F10 Series Dimensions Page 144
F15 Series Order codes Page 198
F15 Series Dimensions Page 242

Manifold port with fitting block

Valve port with fitting block

Manifold port with female thread block

Valve port with female thread block

Easy Assembly Type Manifold Plug-in Type (F10/F15)

Manifold conforms to reducing wiring work, and enables easy addition or removal of manifold blocks.
Direct mounting (mounting without DIN rail) is selectable.
Combination use of five wiring specifications offers more effective wiring savings.

F10 Series Order codes Page 106
F10 Series Dimensions Page 145
F15 Series Order codes Page 204
F15 Series Dimensions Page 244

Manifold port with fitting block

Valve port with fitting block

Manifold port with female thread block

Valve port with female thread block

Wiring Specifications(F10/F15)

Flat cable connectortop surface (vertical) wiring type Note

Flat cable connector side surface (horizontal) wiring type Note

D-sub connector top surface (vertical) wiring type Note

D-sub connector side surface (horizontal) wiring type Note

Terminal block

Note: You can easily change the connector direction.

Patent pending

Photograph shows D-sub connector.

For the flat cable connector and D-sub connector, the no power supply terminal type is also available.

Easy Assembly Type Manifold Serial Transmission Type (F10/F15)

- For CC-Link
- For CompoNet
- For DeviceNet
- For EtherCAT
- For EtherNet/IP

※For details, see p. 42-44.

F10 Series Order codes Page 112
F10 Series Dimensions Page 151
F15 Series Order codes Page 210
F15 Series Dimensions Page 249

For EtherCAT
For EtherNet/IP

Energy-Saving Proposal Using the Solenoid Valves F Series

Comparison of Power Consumption (Reference)

With the cylinder conditions operating 5 seconds in the extended side and 5 seconds in the retraced side, and an operating time of 12 hours per day, five days per week, and 50 weeks per year, the power consumption for one year is calculated. (Annual power consumption: Power consumption per hour × 12 hours × 5 days × 50 weeks)

■Case 1: when single solenoid is used (0.4W: Standard type)

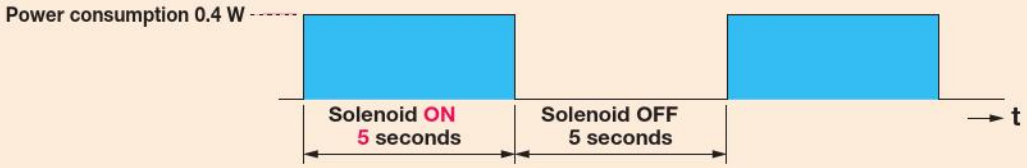

■Case 2: when single solenoid is used (0.1W: Low current type)

■Case 3: when double solenoid is used (0.4W: Standard type)

<Pulse control using self-holding function>

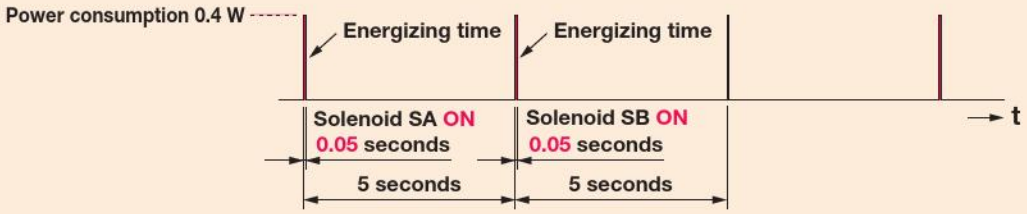

●Results for calculation of power consumption under the above conditions, and power consumption graph

Solenoid	Power consumption (W)	Energizing time (s)		Number of operations per hour (cycles)	Electric energy per hour (Wh)	Annual electric energy (kWh) and annual electric energy cost
		SA: ON	SB: ON			
Single solenoid (standard type)	0.4	5	-	360	0.200	0.6 [13.2 yen]
Single solenoid (low-current type)	Starting: 0.4/holding: 0.1	5	-	360	0.052	0.156 [3.43 yen]
Double solenoid (standard type)	0.4	0.05	0.05	360	0.004	0.012 [0.264 yen]

Remarks: Comparison with a new type DC 24 V solenoid. When power costs 22 yen/kWh.

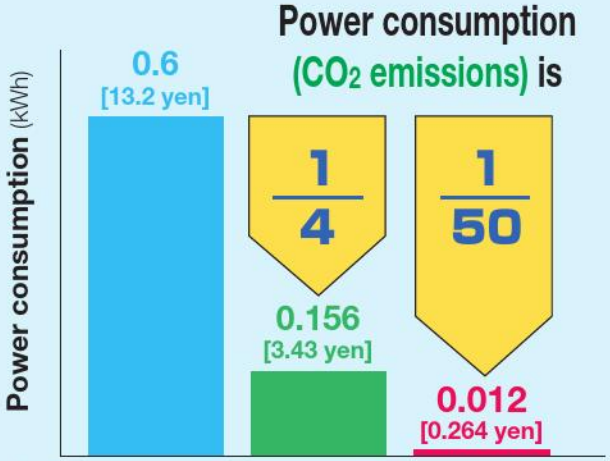

The double solenoid valve (pulse control) shows a lower electric energy result. Note that with higher operation frequency, this difference will narrow somewhat.

●With use of 0.1W low-current type, the power consumption is reduced to 1/4.

Furthermore

●If pulse control is performed using a double solenoid, power consumption can be sharply reduced.

●Solenoid valves F series is single/double dual use valves.

●Since the single solenoid and double solenoid are the same price[Note], it also enables cost benefits.

Note: For 2-position valve. Excluding T0 type.

Criteria for Selection: Solenoid Valve and Air Cylinders (1)

1. Cylinder and valve selection

1 Select bore size of the cylinder according to the required cylinder thrust.

2 Decide valve size according to the cylinder bore size and speed.

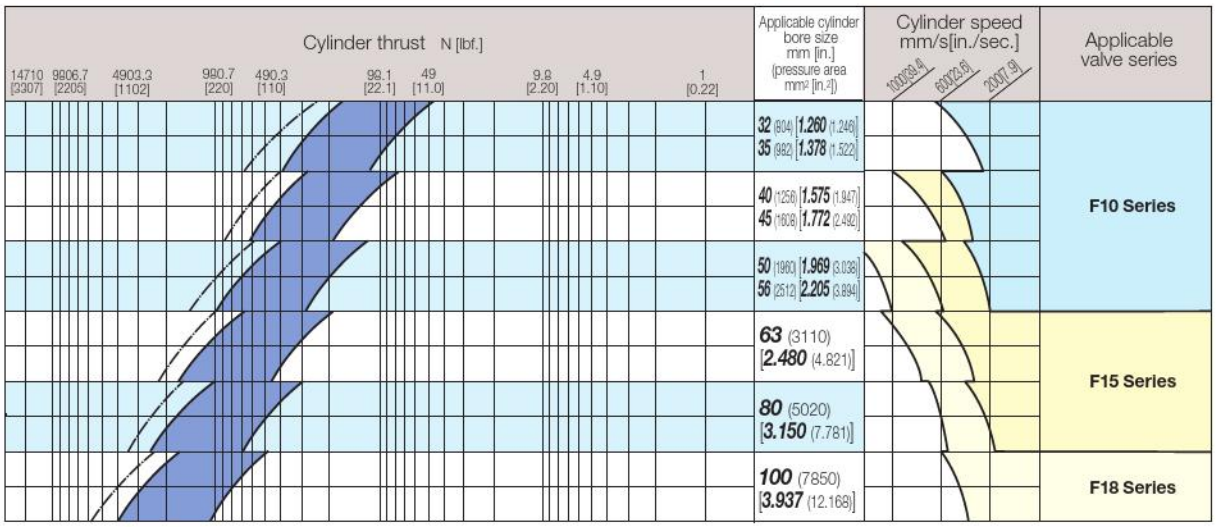

How to Use the Diagram

1. Selection of Cylinder Bore size

Select the cylinder bore size so that the load is within the ▬ of the diagram. Where the requirements call for 0.5MPa [73psi.] of operating air pressure and 98.1N [22.1lbf.] of thrust, three cylinder bore sizes can be selected, ϕ20 (load ratio of 70%), ϕ25 (load ratio of 50%), and ϕ32 (load ratio of 30%).

2. Selection of Applicable Valve

With the required cylinder speed set at 400mm/s [15.748 in./sec.], the load ratio at the bore size ϕ32 [1.260 in.] is about 50%, and the applicable valve is therefore F10 series. At bore size ϕ35 [1.378 in.], as well, where the load ratio is about 50%, the applicable valve is F10 series. And when the load ratio is about 50% for the bore size ϕ63 [2.480 in.], the applicable valve should be F15 series.

3. Selection Precautions

For high-speed operations or for other cases where a constant operating speed is required whereas the load has some variation, select a larger cylinder bore size where the load ratio is 50% or less. For valve, piping, and fitting sizes, as well, select sizes that provide enough margin.

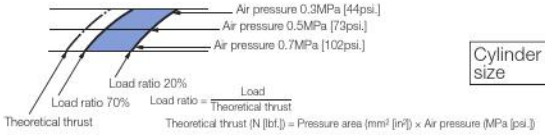

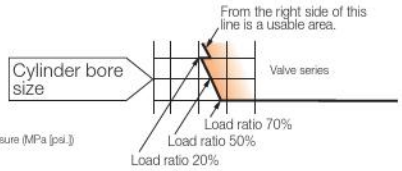

2. Selection of F.R.L.Combinations

For F.R.L. combinations, watch the flow rate characteristics graph in order to select sizes that let pressure fall to 10% or to 0.05 MPa [7.25 psi.] or less when the system is at maximum flow (total air volume). Use the same criteria for selecting air filters, regulators, and lubricators. Moreover, when the flow is small, ensure that the flow exceeds the lubricator's minimum flow rate for drips.

3. Selection of Piping and Fitting Sizes

Select piping and fitting sizes that fit the piping connection port sizes for the equipment, and avoid over-throttling with bushings or other equipment. In addition, use of quick fittings, which do not have a throttle on the inner diameter, can assure adequate flow volume and prevent pressure drops.

■ Reference

● Actual air cylinder thrust

$$F_A = F \times \eta = \frac{\pi D^2}{4} \times P \times \eta$$

● For valve/F.R.L. unit selection

Air cylinder air flow rate

$$Q_1 = \frac{\pi D^2}{4} \times L \times \frac{60}{t} \times \frac{P+0.1}{0.1} \times 10^{-6}$$

Air flow rate of piping from valve to cylinder

$$Q_2 = \frac{\pi d^2}{4} \times \ell \times \frac{60}{t} \times \frac{P}{0.1} \times 10^{-6}$$

Total air flow ratea

$$Q_3 = Q_1 + Q_2$$

● For compressor selection

Air cylinder air consumption

$$q_1 = \frac{\pi D^2}{4} \times L \times 2 \times n \frac{P+0.1}{0.1} \times 10^{-6}$$

Air consumption of piping from valve to cylinder

$$q_2 = \frac{\pi d^2}{4} \times \ell \times 2 \times n \frac{P}{0.1} \times 10^{-6}$$

Total air consumption

$$q_3 = q_1 + q_2$$

D : Bore size mm
d : Piping inner diameter mm
F : Theoretical cylinder thrust
F_A : Actual cylinder thrust
L : Cylinder stroke mm
ℓ : Piping length mm
n : Number of cylinder reciprocations per minute times/min
P : Air pressure MPa
Q_1 : Air flow rate required for cylinder [ℓ/min (ANR)]
Q_2 : Air flow rate required for piping [ℓ/min (ANR)]
Q_3 : Total air flow rate [ℓ/min (ANR)]
q_1 : Cylinder air consumption [ℓ/min (ANR)]
q_2 : Air consumption of piping [ℓ/min (ANR)]
q_3 : Total air consumption [ℓ/min (ANR)]
t : Time required for one cylinder stroke s
η : Cylinder thrust efficiency (approx. 70%, but 50% or lower for high speed)

Criteria for Selection: Solenoid Valve and Air Cylinders (2)

Cylinder thrust (Theoretical value)

N [lbf.]

Cylinder bore size mm [in.]	Rod dia. mm [in.]	Operating type	Operation direction	Pressure area mm² [in.²]	Air pressure MPa [psi.]								
					0.1 [15]	0.2 [24]	0.3 [44]	0.4 [58]	0.5 [73]	0.6 [87]	0.7 [102]	0.8 [116]Note	0.9 [131]Note
2.5 [0.098]	1 [0.039]	Single acting push type		4.9 [0.0076]	—	—	—	0.8 [0.18]	1.3 [0.29]	1.7 [0.38]	2.2 [0.49]	—	—
4 [0.157]	2 [0.079]	Single acting push type		12.6 [0.0195]	—	—	—	2.2 [0.49]	3.5 [0.79]	4.8 [1.08]	6.0 [1.35]	—	—
4.5 [0.177]	2 [0.079]	Double acting type	Push side	15.9 [0.0246]	—	3.2 [0.72]	4.8 [1.08]	6.4 [1.44]	8.0 [1.80]	9.5 [2.14]	11.1 [2.50]	—	—
			Pull side	12.8 [0.0198]	—	2.6 [0.58]	3.8 [0.85]	5.1 [1.15]	6.4 [1.44]	7.7 [1.73]	9.0 [2.02]	—	—
		Single acting push type		15.9 [0.0246]	—	—	1.9 [0.43]	3.5 [0.79]	5.1 [1.15]	6.6 [1.48]	8.2 [1.84]	—	—
6 [0.236]	3 [0.118]	Single acting push type		28.3 [0.0439]	—	—	5.0 [1.12]	7.8 [1.75]	10.7 [2.41]	13.5 [3.03]	16.3 [3.66]	—	—
		Single acting pull type		21.2 [0.0329]	—	—	2.9 [0.65]	5.0 [1.12]	7.1 [1.60]	9.2 [2.07]	11.3 [2.54]	—	—
		Double acting type	Push side	28.3 [0.0439]	—	5.7 [1.28]	8.5 [1.91]	11.3 [2.54]	14.2 [3.19]	17 [3.82]	19.8 [4.45]	—	—
			Pull side	21.2 [0.0329]	—	4.2 [0.94]	6.4 [1.44]	8.5 [1.91]	10.6 [2.38]	12.7 [2.85]	14.8 [3.33]	—	—
10 [0.394]	4 [0.157]	Single acting push type		78.5 [0.1217]	—	9.8 [2.20]	17.7 [3.98]	25.5 [5.73]	33.4 [7.51]	41.2 [9.26]	49.1 [11.0]	—	—
		Single acting pull type		66 [0.102]	—	7.3 [1.64]	13.9 [3.12]	20.5 [4.61]	27.1 [6.09]	33.7 [7.58]	40.3 [9.06]	—	—
		Double acting type	Push side	78.5 [0.1217]	7.9 [1.78]	15.7 [3.53]	23.6 [5.31]	31.4 [7.06]	39.3 [8.83]	47.1 [10.6]	55 [12.4]	—	—
			Pull side	66 [0.102]	6.6 [1.48]	13.2 [2.97]	19.8 [4.45]	26.4 [5.93]	33 [7.42]	39.6 [8.90]	46.2 [10.4]	—	—
16 [0.630]	5 [0.197]	Single acting push type		201 [0.312]	—	30.4 [6.83]	50.5 [11.4]	70.6 [15.9]	90.7 [20.4]	110.8 [24.91]	130.9 [29.43]	—	—
		Single acting pull type		181 [0.281]	—	26.4 [5.93]	44.5 [10.0]	62.6 [14.1]	80.7 [18.1]	98.8 [22.2]	116.9 [26.28]	—	—
		Double acting type	Push side	201 [0.312]	20.1 [4.52]	40.2 [9.04]	60.3 [13.6]	80.4 [18.1]	100.5 [22.59]	120.6 [27.11]	140.7 [31.63]	—	—
			Pull side	181 [0.281]	18.1 [4.07]	36.2 [8.14]	54.3 [12.2]	72.4 [16.3]	90.5 [20.3]	108.6 [24.41]	126.7 [28.48]	—	—
20 [0.787]	8 [0.315]	Single acting push type		314 [0.487]	—	24.6 [5.53]	56 [12.6]	87.4 [19.6]	118.8 [26.71]	150.2 [33.76]	181.6 [40.82]	213 [47.88]	244.4 [54.94]
		Double acting type	Push side	314 [0.487]	31.4 [7.06]	62.8 [14.1]	94.2 [21.2]	125.6 [28.23]	157 [35.29]	188.4 [42.35]	219.8 [49.41]	251.2 [56.47]	282.6 [63.53]
			Pull side	264 [0.409]	26.4 [5.93]	52.8 [11.9]	79.2 [17.8]	105.6 [23.74]	132 [29.67]	158.4 [35.61]	184.8 [41.54]	211.2 [47.48]	237.6 [53.41]
25 [0.984]	10 [0.394]	Single acting push type		490 [0.760]	—	98 [22.0]	147 [33.0]	196 [44.1]	245 [55.1]	294 [66.1]	343 [77.1]	392 [88.1]	441 [99.1]
		Double acting type	Push side	490 [0.760]	49 [11.0]	98 [22.0]	147 [33.0]	196 [44.1]	245 [55.1]	294 [66.1]	343 [77.1]	392 [88.1]	441 [99.1]
			Pull side	412 [0.639]	41.2 [9.26]	82.4 [18.5]	123.6 [27.79]	164.8 [37.05]	206 [46.31]	247.2 [55.57]	288.4 [64.83]	329.6 [74.09]	370.8 [83.36]
32 [1.260]	12 [0.472]	Single acting push type		804 [1.246]	—	161 [36.2]	241 [54.2]	322 [72.4]	402 [90.4]	482 [108]	563 [127]	643 [145]	724 [163]
		Double acting type	Push side	804 [1.246]	80 [18.0]	161 [36.2]	241 [54.2]	322 [72.4]	402 [90.4]	482 [108]	563 [127]	643 [145]	724 [163]
			Pull side	690 [1.070]	69 [15.5]	138 [31.0]	207 [46.5]	276 [62.0]	345 [77.6]	414 [93.1]	483 [109]	552 [124]	621 [140]
40 [1.575]	16 [0.630]	Single acting push type		1256 [1.947]	—	251 [56.4]	377 [84.7]	502 [113]	628 [141]	754 [169]	879 [198]	1005 [225.9]	1130 [254.0]
		Double acting type	Push side	1256 [1.947]	126 [28.3]	251 [56.4]	377 [84.7]	502 [113]	628 [141]	754 [169]	879 [198]	1005 [225.9]	1130 [254.0]
			Pull side	1055 [1.635]	106 [23.8]	211 [47.4]	317 [71.3]	422 [94.9]	528 [119]	633 [142]	739 [166]	844 [190]	950 [214]
50 [1.969]	16 [0.630]	Double acting type	Push side	1963 [3.043]	196 [44.1]	393 [88.3]	589 [132]	785 [176]	982 [221]	1178 [264.8]	1374 [308.9]	—	—
			Pull side	1762 [2.731]	176 [39.6]	352 [79.1]	529 [119]	705 [158]	881 [198]	1057 [237.6]	1233 [277.2]	—	—
63 [2.480]	20 [0.787]	Double acting type	Push side	3117 [4.831]	312 [70.1]	623 [140]	935 [210]	1247 [280.3]	1559 [350.5]	1870 [420.4]	2182 [490.5]	2494 [560.7]	2805 [630.6]
			Pull side	2803 [4.345]	280 [62.9]	561 [126]	841 [189]	1121 [252.0]	1402 [315.2]	1682 [378.1]	1962 [441.1]	2242 [504.0]	2523 [567.2]
80 [3.150]	25 [0.984]	Double acting type	Push side	5026 [7.790]	503 [113]	1005 [225.9]	1508 [339.0]	2010 [451.8]	2513 [564.9]	3016 [678.0]	3518 [790.8]	4021 [903.9]	4523 [1017]
			Pull side	4536 [7.031]	454 [102]	907 [204]	1361 [306.0]	1814 [407.8]	2268 [509.8]	2722 [611.9]	3175 [713.7]	3629 [815.8]	4082 [917.6]
100 [3.937]	30 [1.181]	Double acting type	Push side	7853 [12.172]	785 [176]	1571 [353.2]	2356 [529.6]	3141 [706.1]	3927 [882.8]	4712 [1059]	5497 [1236]	6282 [1412]	7068 [1589]
			Pull side	7147 [11.078]	715 [161]	1429 [321.2]	2144 [482.0]	2859 [642.7]	3574 [803.4]	4288 [963.9]	5003 [1125]	5718 [1285]	6432 [1446]
125 [4.921]	36 [1.417]	Double acting type	Push side	12271 [19.020]	1227 [275.8]	2454 [551.7]	3681 [827.5]	4908 [1103]	6136 [1379]	7363 [1655]	8590 [1931]	9817 [2207]	11044 [2483]
			Pull side	11254 [17.443]	1125 [252.9]	2251 [506.0]	3376 [758.9]	4502 [1012]	5627 [1265]	6752 [1518]	7878 [1771]	9003 [2024]	10129 [2277]

Note:This air pressure is not available for Solenoid Valves F series.

Safety Precautions (Solenoid Valves F Series)

Always read these precautions carefully before use.

Before selecting and using the products, please read all the "Safety Precautions" carefully to ensure proper product use.
The Safety Precautions described below are to help you use the product safely and correctly, and to prevent injury or damage to you, other people, and assets.
Be sure to observe these safety precautions together with the following safety regulations of ISO4414 (Pneumatic fluid power - General rules and safety requirements for systems and their components), and JIS B 8370 (General rules relating to systems).

The directions are ranked according to degree of potential danger or damage: "DANGER", "WARNING", "CAUTION" and "ATTENTION."

⚠ DANGER	Indicates situations that can be clearly predicted as dangerous. Death or serious injury may result if the situation is not avoided. It could also result in damage or destruction of assets.
⚠ WARNING	Indicates situations that, while not immediately dangerous, could become dangerous. Death or serious injury may result if the situation is not avoided. It could also result in damage or destruction of assets.
⚠ CAUTION	Indicates situations that, while not immediately dangerous, could become dangerous. Failure to avoid the situation creates the risk of minor or semi-serious injury. It could also result in damage or destruction of assets.
⚠ ATTENTION	While there is little chance of injury, this content refers to points that should be observed for appropriate use of the product.

- **This product was designed and manufactured for use in general industrial machinery.**
- When selecting and handling equipment, the system designer or another person with sufficient knowledge and experience should always read the "Safety Precautions", "catalog", "instruction manual", and other literature before commencing operation. Improper handling is dangerous.
- After reading the instruction manual, catalog, and other documentation, always place them in a location that allows easy availability for reference to users of this product.
- Whenever transferring or lending the product to another person, always attach the catalog, instruction manual, and other information to the product where they are easily visible in order to ensure that the new user can use the product safely and properly.
- The danger, warning and caution items listed under these "Safety Precautions" do not cover all possible contingencies. Read the catalog and instruction manual carefully, and always keep safety first.

⚠ DANGER

- Do not use for the purposes listed below:
  1. Medical equipment related to maintenance or management of human lives or bodies.
  2. Mechanical devices or equipment designed for the purpose of moving or transporting people.
  3. Critical safety components in mechanical devices.

  This product has not been planned or designed for purposes that require advanced stages of safety. It could cause injury to human life.
- Do not use in locations with or near dangerous substances such as flammable or ignitable substances. This product is not explosion-proof. It could ignite or burst into flames.
- When attaching the product, always firmly support and secure them (including workpieces) in place. Dropping or falling of the product or improper operation could result in injury.
- Persons who use a pacemaker, etc., should keep a distance of at least 1 meter [3.28 ft.] away from the product. There is a possibility that the pacemaker will malfunction due to the strong magnet built into the product.
- Never attempt to modify the product. It could result in abnormal operation leading to injury, etc.
- Never attempt inappropriate disassembly, assembly or repair of the product's basic construction, or of its performance or functions. This could result in injury, electric shock, fire, etc.
- Do not splash water on the product. Spraying it with water, washing it, or using it underwater could result in malfunction of the product leading to injury, electric shock, fire, etc.
- While the product is in operation, avoid touching it with your hands or otherwise approaching too close. In addition, do not make any adjustments to the interior or to the attached mechanisms (manual override, connecting and disconnecting of wiring connectors, adjustment of pressure switches, or release or connection of piping tubes or plugs) while in operation. The actuator can move suddenly, possibly resulting in injury.

⚠ WARNING

- Do not use the product in excess of its specification range. Such use could result in product breakdowns, function stop, damage or drastically reduce the operating life.
- Before supplying air or electricity to the device and before starting operation, always conduct a safety check of the area of machine operation. Unintentional supply of air or electricity could possibly result in electric shock, or in injury caused by contact with moving parts.
- Do not touch the terminal and the miscellaneous switches, etc., while the device is powered on. There is a possibility of electric shock and abnormal operation.
- Do not throw the product into fire. The product could explode and/or release toxic gases.
- Do not sit on the product, place your foot on it, or place other objects on it. Accidents such as falling or tripping over the product could result in injury. Dropping the product could result in injury, or also damage or break it resulting in abnormal or erratic operation, or runaway, etc.
- When conducting any kind of operation for the product, such as maintenance, inspection, repair, or connection/disconnection or replacement of piping, always turn off the air supply completely and confirm that residual pressure inside the product or in piping connected to the product is zero before proceeding. In particular, be aware that residual air will still be in the air compressor, vaccum pump or air storage tank. The actuator could abruptly move if residual air pressure remains inside the piping, causing injury.
- Before commencing normal operation, always release the lock of the locking type manual override, and confirm that the manual override is in the normal position and that the main valve is in the proper switching position, and only then commence the operation. Failure to do so could lead to erroneous operation.
- Always shut OFF the power before wiring operations. Wiring with the power ON could result in electric shock.
- Always apply the specified voltage to the solenoid. Applying the wrong voltage could result in failure to perform the intended function, and could damage or burn the product itself.
- Avoid scratching the cords of lead wires, etc. Letting the cords be subject to scratching, excessive bending, pulling, rolling up, or being placed under heavy objects or squeezed between two objects, may result in current leaks or defective continuity that lead to fire, electric shock, or abnormal operation.
- Do not pull out the connectors while the power is ON. Also, do not apply unnecessary stress on the connector. It could result in erratic equipment operation that could lead to personal injury, equipment breakdown, or electrical shock, etc.
- Always check the Catalog to ensure that the product wiring and piping is done correctly. Errors in wiring and piping could lead to abnormal operation of the actuators, etc.
- In the first operation after the equipment has been idle for 48 hours or more, or has been in storage, there is a possibility that contacting parts have got stuck, resulting in equipment operation delays or sudden movements. For these first operations, always run a test operation before use to check that operating performance is normal.

- In low frequency use (more than 30 days between uses), there is a possibility that contacting parts may have stuck toghter, resulting in equipment operation delays or sudden movements that could lead to personal injury. Run a test operation at least once every 30 days to confirm that movement is normal.
- For double solenoid type (excluding the Tandem 3-port valve), do not apply current through both solenoids simultaneously. It is impossible in such a situation to maintain the correct valve position, and the equipment may operate in an unintended direction, leading to the possibility of equipment breakdown or personal injury.
- Do not use the solenoid valves or the wiring that controls them, near power lines where large electrical currents are flowing, or in locations subject to high magnetic fields or power surges. Such application could lead to unintended operation.
- The solenoid valve can generate surge voltage and electromagnetic waves when the switch is turned OFF, affecting the operations of surrounding equipment. Use solenoids with surge suppression, or take countermeasures in the electrical circuits for surges or electromagnetic waves.
- Do not use the product where ozone may be generated, such as near ocean beaches or other places subject to direct sunlight or mercury lamps. Ozone can cause rubber parts to deteriorate, which can lead to degraded performance and functions, or to equipment stoppages. (Excludes items where measures against ozone have been taken.)
- Do not use any media other than shown on the specifications. Use of non-specified media could lead to functional shutdown after a short period, to sudden performance drops, or to shorter operating life.
- If mounting the solenoid valve inside a control panel, or if energizing it for long periods, provide heat radiation measures to ensure that temperatures surrounding the solenoid valve always remain within the specified temperature range. In addition, if energizing continuously over long periods, rising temperatures due to generation of heat in the coil can lead to a decline in solenoid valve performance and operating life, and have adverse effects on nearby equipment. As a result, when the solenoid valve is continuously energized over long periods of time, or when the solenoid valve is energized for longer periods than it is non-energized on any day, a good suggestion is to keep the solenoid valve in a normally open (NO) specification as one possible method of reducing the amount of time the valve is energized. For details, consult us.
- After wiring operations, always check to ensure that no wiring connection errors exist before turning ON the power.
- Do not collect the exhaust lines for air cylinders, etc. with pilot exhaust lines for solenoid valves into the same piping, etc. Interference in the exhaust could result in erratic operation.
- When using the valve in a manifold, be aware when operating an air cylinder or performing air blowing operations that back pressure could cause erratic operations of the cylinder or erroneous air delivery from the air blow port. Caution is particularly needed when using valves with 3-position exhaust center specification, when operating single acting cylinders, or when operating a cylinder and blowing air using the same manifold. If there are concerns in this area, take such countermeasures as using individual exhaust spacers or back pressure prevention valves.

⚠ CAUTION

- When mounting the product, leave room for adequate working space around it. Failure to ensure adequate working space will make it more difficult to conduct daily inspections or maintenance, which could eventually lead to system shutdown or damage to the product.
- For mounting or transport of heavy products, use a lift, supporting tool, or several people, to provide firm support, and proceed with due caution to ensure personal safety.
- Do not bring magnetic media, within 1 meter [3.28 ft.] of the product. There is the possibility that the data on the magnetic media will be destroyed due to the magnetism of the magnet.
- If leakage current is flowing in the control circuit, there is a possibility of the product performing an unintended operation. Take measures against current leaking in the control circuit, to ensure that the leakage current value does not exceed the allowed range in the product specifications.
- Do not block the product's breathing holes. Pressure changes occur due to changes in volume during operation. Blocking the breathing holes destroys the pressure balance, and could cause failure of the intentional operation, equipment damage, or personal injury.
- Do not use the solenoid valve in locations subject to large electrical currents or magnetic fields. It could result in erratic operation.
- Oily materials from the compressor (excluding the oil-free compressor) can cause drastic deterioration in product performance, and even a functional shutdown. Always install a mist filter before pneumatic equipment to remove the oily component.
- The properties of the lubrication oil can change when used in dry air where dew point temperatures is lower than −20° C [−4° F]. It could result in degraded performance or in functional shutdown.
- Do not use the product in locations that are subjected to direct sunlight (ultraviolet ray), to dust, salt, or iron powder, high temperature, high humidity or in media or ambient atmospheres that include organic solvents, phosphate ester type hydraulic oil, sulfur dioxide, chlorine gas, acids, etc. It could lead to an early shutdown of some functions or a sudden degradation of performance, and result in reduced operating life. For materials used, see Major Parts and Materials.
- Always carefully wash your hands after touching oil or grease used in the valves. If you smoke a cigarette while there is oil or grease remains on your hands, oil or grease transferred to the cigarette could catch fire and emit toxic gases.

⚠ ATTENTION

- When considering the possibility of using this product in situations or environments not specifically noted in the Catalog or Instruction Manual, or in applications where safety is an important requirement, such as in an airplane facility, combustion equipment, leisure equipment, safety equipment and other places where human life or assets may be greatly affected, take adequate safety precautions such as application with enough margins for ratings and performance or fail-safe measures. Be sure to consult us with such applications.
- Always check the Catalog and other reference materials for product wiring and plumbing setup.
- Install a muffler, etc. on the exhaust port. It is effective in reducing exhaust noise.
- When handling the product, wear protective gloves, safety glasses, safety shoes, etc. to keep safety.
- When the product can no longer be used or is no longer needed, dispose of it appropriately as industrial waste in accordance with the Waste Disposal and Public Cleaning Law, and other ordinances and regulations imposed by local government authorities. As incineration disposal of oil or grease used in the valves will generate corrosive, toxic hydrofluoric acid (HF), dispose of these compounds in an acid-resistant incinerator with toxic removal facilities. For large volumes, use a registered industrial waste disposer.
- Pneumatic equipment can exhibit degraded performance and function over its operating life. Always conduct daily inspections of the pneumatic equipment, and confirm that all requisite system functions are satisfied, to prevent accidents from happening.
- Air leaks from the valve are not zero. For application of requiring holding pressure (including vacuum) inside the pressure vessel, consider adequate margin of capacity and holding time in design of the system.
- When using a valve for air blowing, use an external pilot specification. With the internal pilot specification, air blowing can cause a pressure drop that could affect valve operations.
- For inquiries about the product, consult your nearest Koganei sales office, or Koganei overseas department. The address and telephone number is shown on the back cover of this catalog.

⚠ OTHERS

- Always observe the following items.
  1. When using this product in pneumatic systems, always use genuine KOGANEI parts or compatible parts (recommended parts).
     When conducting maintenance and repairs, always use genuine KOGANEI parts or compatible parts (recommended parts). Always observe the required methods and procedure.
  2. Do not attempt inappropriate disassembly or assembly of the product relating to basic configurations, or its performance or functions.

  Koganei cannot be responsible if these items are not properly observed.

General Precautions

Mounting

1. While any mounting direction is allowed, be sure to avoid strong shocks or vibrations applied directly to the body.
2. Avoid using in the locations and environment listed below, as it could result in malfunction of the valve. If use in such conditions is unavoidable, always provide a cover or other adequate protective measures.
   - Location directly exposed to water drops or oil drops
   - Environment where a valve body is subject to dew condensation
   - Location directly exposed to machining chips, dust, etc
3. In piping connection with valves, flush the tube completely (by blowing compressed air) before piping.
   Intrusion of machining chips or sealing tape, rust, etc., generated during plumbing could result in air leaks and other defective operations.
4. Never use the valve with the 4(A) and 2(B) ports vented to the atmosphere.
5. When mounting a valve inside a control panel, or when energizing time is long, make adequate consideration for ventilation and other heat dissipation measures.
6. When adding or subtracting units in the manifold, or replacing a fitting block, be sure to tighten to within the specified tightening torque range.

Media

1. Use air for the media. For the use of any other media, consult us.
2. Air used for the cylinder should be clean air that contains no deteriorated compressor oil, etc. Install an air filter (filtration of 40 μm or less) near the valve to remove collected liquid or dust. In addition, drain the air filter periodically.
3. When supply pressure is low, use piping for the 1(P) port with sufficient tube size.

Lubrication

Can be used without lubrication due to the factory lubricant (grease). When the pneumatic products require lubrication, use Turbine Oil Class 1 (ISO VG32) or the equivalent. In addition, cutting off oil feed while an operation is in progress could lead to malfunction due to the dissipation of the factory lubricant (grease). As a result, always keep the oil feed running continuously. However, use caution since excessive oil feed can also be a cause of malfunction. Avoid using spindle oil or machine oil.

Atmosphere

The product cannot be used when the media or ambient atmosphere contains any of the substances listed below.
Organic solvents, phosphate ester type hydraulic oil, sulphur dioxide, chlorine gas, or acids, etc.

Wiring

After wiring, check that there is no error in the wiring connections.

Piping

Since the 1(P), 3(R2), and 5(R1) ports are on both ends of the manifold, piping direction can be selected depending on the application (in monoblock manifolds).
At shipping, plugs are temporarily screwed in ports at one end, but are not firmly tightened. Regardless of which end piping is connected, always remove the plugs, use sealing tape or apply other sealing agent, and securely tighten the plugs into the unused ports.

1. Sealing tape wrapping method
   ①Before piping, perform air blowing (flushing) or cleaning to eliminate any machining chips, cutting oil, or dust, etc., remaining inside the pipes.
   ②When screwing in piping or fittings, caution should be taken to avoid letting machining chips or sealing materials from entering into the valves. When using sealing tape, wrap it so that 1.5～2 screw threads remain.

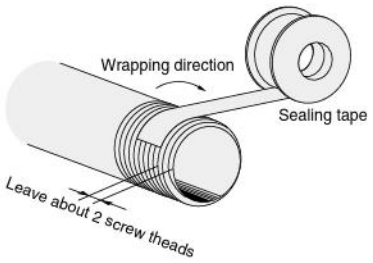

Prevention of erratic operation in the manifold type

When using a manifold-type valve to operate an air cylinder, or to perform air blowing or similar operations, erratic operation due to exhaust interference or malfunction due to insufficient flow rate could occur. When using the manifold type valves, be sure to take the following measures beforehand.

1. Erratic operation due to large exhaust flow rate
   Cause: When a large-bore cylinder is operating, or multiple cylinders are operating at the same time, the exhaust air in the collective exhaust can flow backward through the exhaust ports of other solenoid valves. This could lead to an obstruction of the operations of other cylinders and may cause erratic operation in single acting cylinders or an Air Hand module due to inflow of air into them. The erratic operation is caused by insufficient manifold exhaust (large exhaust resistance).

   Countermeasure: To reduce the exhaust resistance, for the base monoblock manifold, vent the exhaust ports at both ends. For the split manifold, attach piping blocks to both ends to exhaust from both sides. If still affected even after exhausting from both ends, consider splitting the manifold, or if using a split manifold, either install a port isolator to separate the exhaust, or use a back pressure prevention valve.

2. Malfunctions due to insufficient pressure or flow rate
   Cause: When operating a large-bore cylinder, operating multiple cylinders at the same time, or using circuits to perform air blowing, etc., sudden consumption of air with the manifold type can result in insufficient flow rate to nearby cylinders, causing a reduction in speed or a shortage of thrust. In addition, in the pilot-type valve, this sudden consumption can lead to a pressure shortage for the pilot signals, and it causes erratic operations in the main stem.

   Countermeasure: Because it causes insufficient air delivery to the manifold, supply air from both ends of the manifold, or from the piping block 1(P) port mounted on both sides. For air blowing, consider either dividing the air lines for independent use, or use of an external pilot valve.

5-port, 2-position

When set as a single solenoid or T0 type

When set as a double solenoid

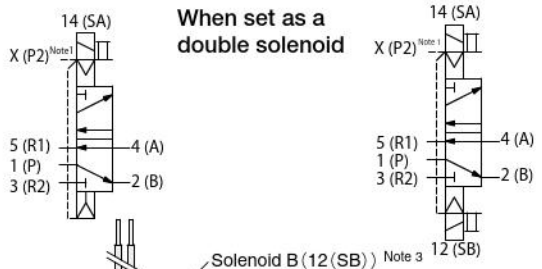

F□T1□-A1
(De-energized)

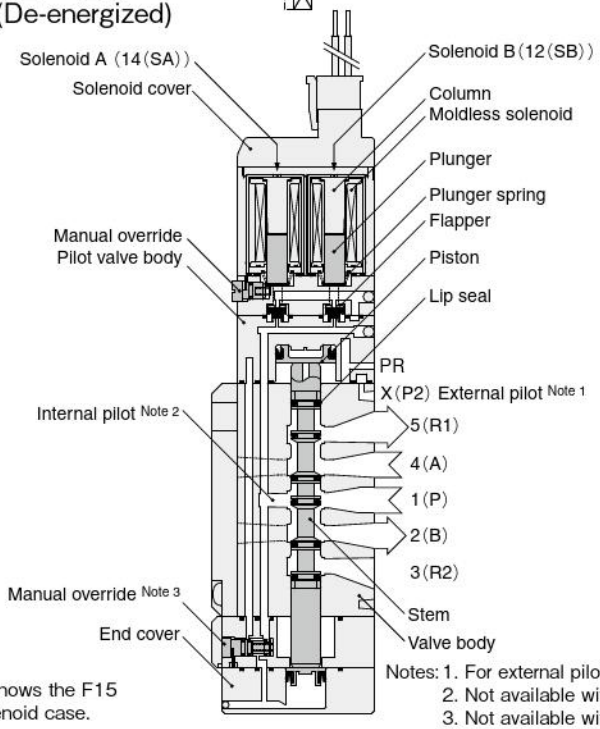

※ Diagram shows the F15 single solenoid case.

Notes: 1. For external pilot type
2. Not available with external pilot type
3. Not available with T0 type

Remark: When using a 5-port valve as a 3-port valve, see p.25.

Major Parts and Materials

Parts			Materials
Valve	Body		Aluminum die-casting
	Stem		Aluminum alloy Note
	Lip seal		Synthetic rubber
	Flapper		
	Sub-base		Aluminum alloy (anodized)
	Plunger		Magnetic stainless steel
	Column		
	End cover		Plastic
Manifold	Body	Monoblock	Aluminum alloy (anodized)
		Split type	Plastic
	Block-off plate		Mild steel (nickel plated)
	Seal		Synthetic rubber

Note: Some F10 and F15 Series models use plastic for the stem material.

5-port, 3-position

(Both 14 (SA) and 12 (SB) are de-energized)

Closed center

F□T3□-A1

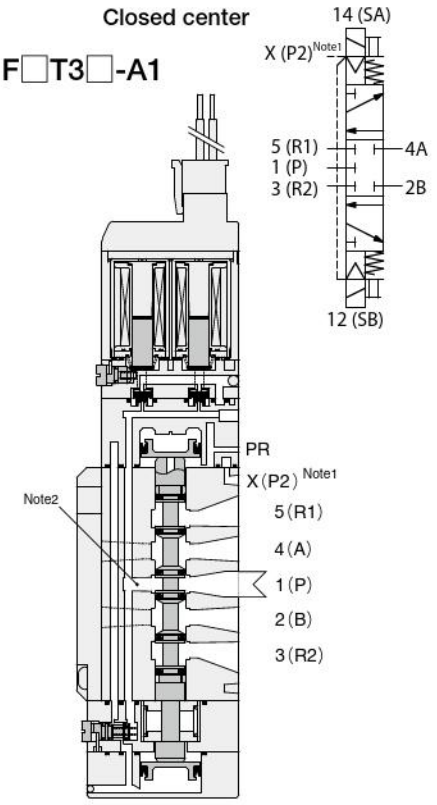

Exhaust center

F□T4□-A1

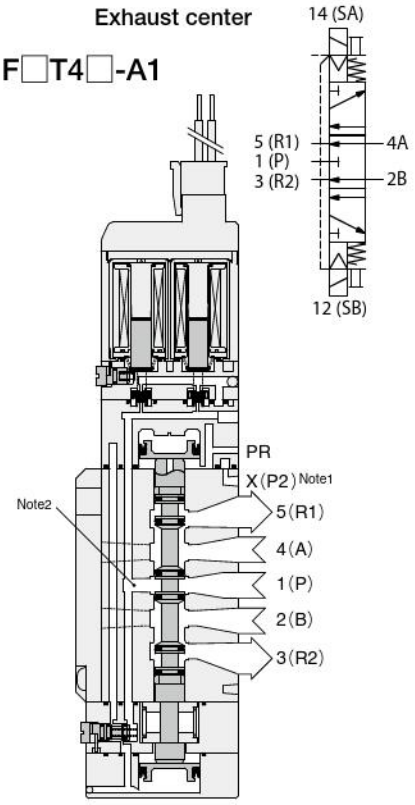

Pressure center

F□T5□-A1

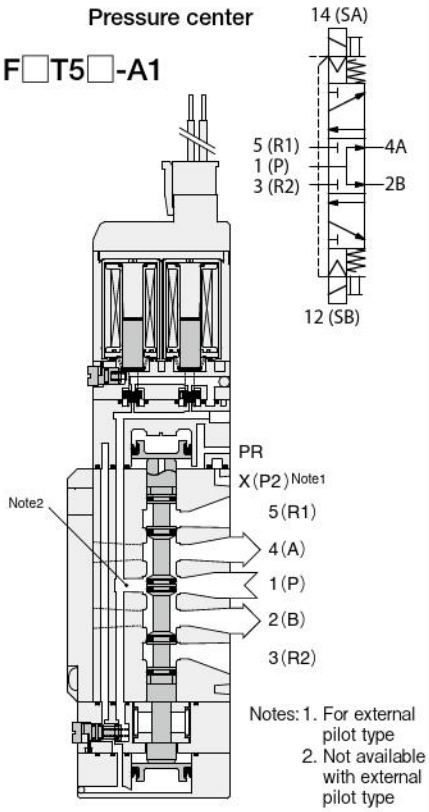

Notes: 1. For external pilot type
2. Not available with external pilot type

Tandem 3-port, 4-position

(Both 14 (SA) and 12 (SB) are de-energized)

Normally closed (NC) & normally closed (NC)

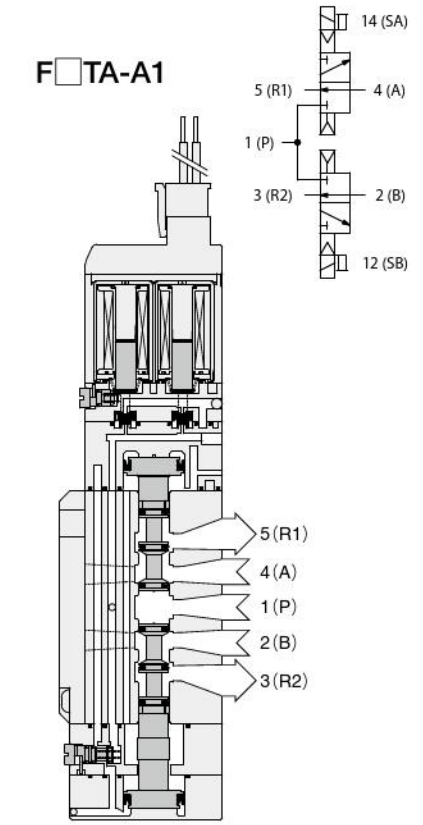

Normally open (NO) & normally open (NO)

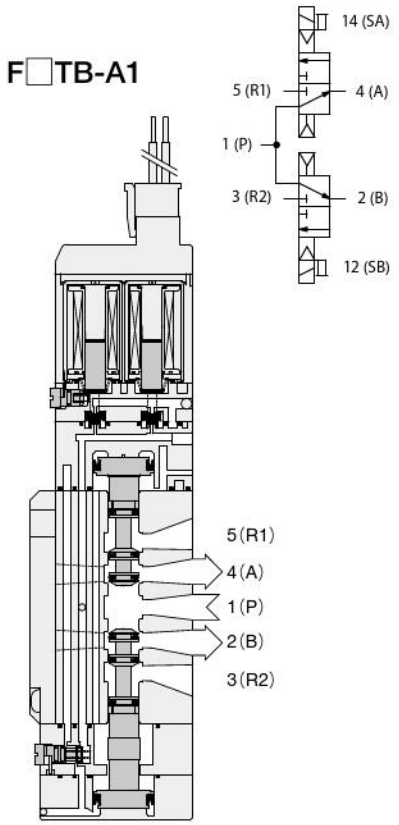

Normally closed (NC) & normally open (NO)

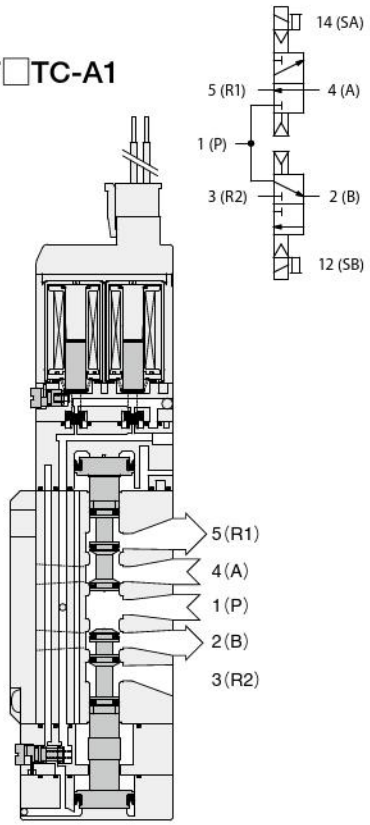

Solenoid

Single and double solenoid switching procedure

By switching the manual override, model F□T1 (2-position valve) can be used as either a single solenoid valve or a double solenoid valve (switching not possible with a 3-position valve and a tandem 3-port valve). Note that the F□T1 is set to the single solenoid specification at shipping.

Switching from a single solenoid valve to a double solenoid valve

1. As shown in Fig.1, insert the flatblade edge of a small screwdriver into the gap between the valve and the cover, and then peel it off and remove the cover.

Caution: As shown in Fig.1, make sure to insert a small screwdriver from the side of the valve cover. The cover claw may be damaged when the cover is removed from the direction of the valve stem. Never remove the cover for any reason other than valve function switching.

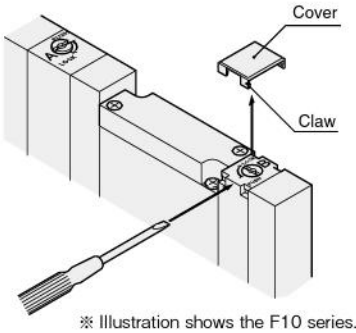

※ Illustration shows the F10 series.

Figure 1

2. As shown in Fig.2, use a small screwdriver, etc. to turn the manual override on the B side by 90 degrees in the counterclockwise direction, so that the manual override button's slit is horizontal, as shown on the right side of the figure. Then the unit can be used as a double solenoid valve. When using it as a double solenoid valve, the button is used as the manual override button for the B side.

Caution: When using it as a double solenoid valve, do not attach the cover that was removed in Fig. 1.

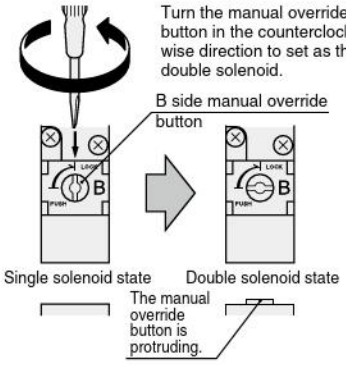

Figure 2

Switching from a double solenoid valve to a single solenoid valve

As shown in Fig.3, use a small screwdriver, etc. to push lightly against the manual override button, and then turn it by 90 degrees in the clockwise direction, so that the manual override button's slit is in the vertical direction, and then attach the cover.

Caution: The cover has directionality (F15 and F18 series only). When attaching, always align the detent on the back of the cover with the manual override button's slit, as shown in Fig.4.

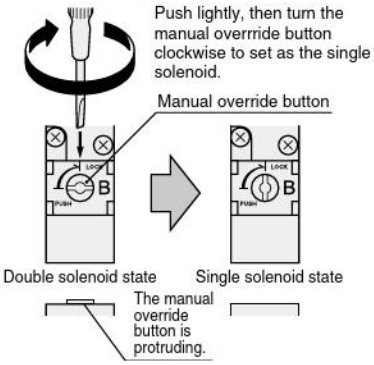

Figure 3

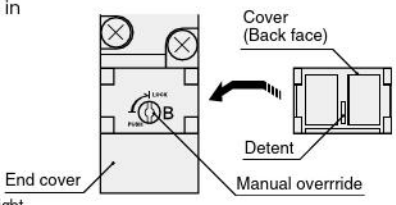

Figure 4

Note about the wiring for the above switching

See the "Wiring instructions" to the right.

Wiring instructions (When used as a single unit, non-plug-in type manifold)

1. Attaching and removing plug connector

Use fingers to insert the connector into the pin, push it in until the lever claw latches onto the protruded section of the connector housing, and complete the connection.
To remove the connector, squeeze the lever along with the connector, lift the lever claw up from the protruded section of the housing, and pull it out.

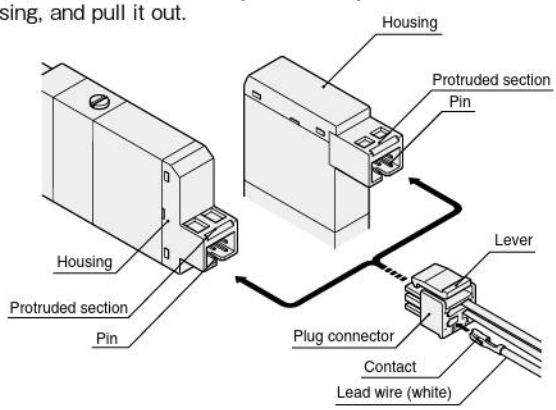

Cautions:
1. When removing the connector, confirm that the lever claw is positively disengaged from the protruded section before pulling out. The housing may be damaged if it is pulled out while engaged with the protruded section.
2. The plug connector lead wires for model F □ T1 (2-position valve) are set to the single solenoid specification at shipping (for plug connector types).
When switching from a single solenoid to a double solenoid specification for use, disconnect the plug connector from the valve, check the hook directions on the lead wire (white) with the contacts, and then insert the lead wire into the plug connector's B side □ hole (see the illustration above). Use the same procedure to switch the manifold type single solenoid to a double solenoid specification.
3. When using the plug-in type manifold, caution should be exercised that even if the valve has been switched to a double solenoid, no power will be supplied to the B side solenoid unless the valve base wiring is set to the double wiring.

2. Attaching and removing plug connector and contact

● **Attaching**

Insert the contact with a lead wire into a plug connector □ hole until the contact hook latches on the connector and is secured to the plug connector. Confirm that the lead wire cannot be easily pulled out (see the diagram below).

● **Removing**

To remove it, insert a tool with a fine tip (such as a small screwdriver) into the rectangular hole on the side of the plug connector to push down on the hook, and then pull out the lead wire. When re-using the contacts, restore the hook back so that they spread outward.

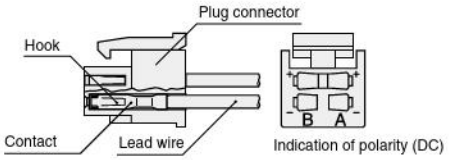

3. Common terminal and short bar

A short bar is attached to the plug connector to ensure that the solenoid A and B wiring are positive common. Do not remove the short bar.

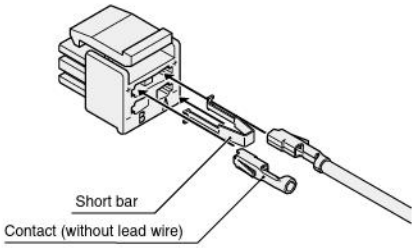

4. Crimping of lead wire and contact

To crimp lead wires into contacts, strip off 4 mm [0.16 in.] of the insulation from the end of the lead wire, insert it into the contact, and crimp it. Be sure to avoid catching the insulation on the exposed wire crimping section.

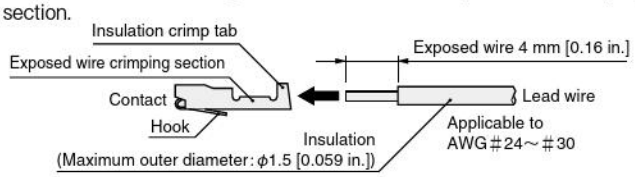

Cautions: **1.** Do not pull hard on the lead wire.
2. For crimping of lead wire and contact, always use a dedicated tool.
Contact: Model 706312-2MK Manufactured by Sumiko Tech, Inc.
Crimping tool: Model F1 (for 706312-2MK) Manufactured by Sumiko Tech, Inc.

5. Common connector assembly

Using a common connector assembly for solenoid valves for a manifold provides common wiring for all the solenoid valves and greatly reduces wiring work.
The common connector assembly types are determined by looking at them from the lead wire side; the right end one is A type, the left end one is C type, and all the others are B type (see the illustration below).

● **For positive common**

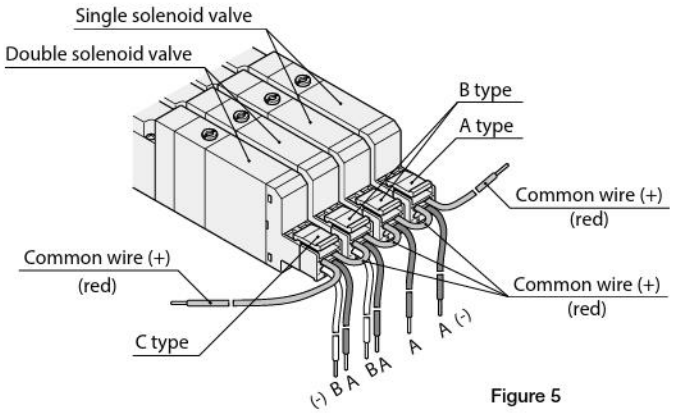

Figure 5

● **For negative common**

You can order the separately sold common connector assembly for use with negative common specification.

Note: Cannot be used with the conventional series (black coil).

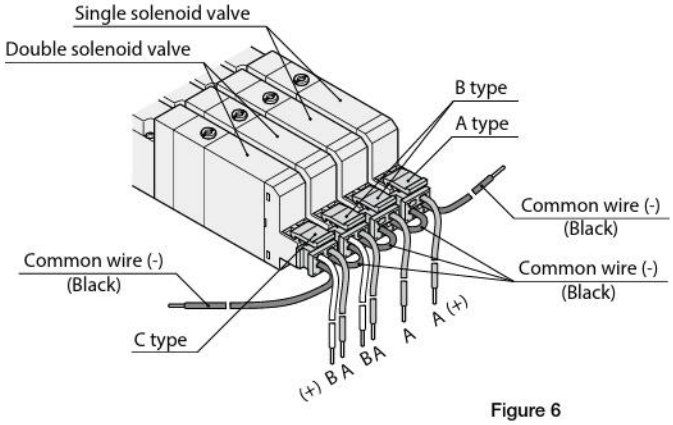

Figure 6

If ordering the common connector assembly, order from the common connector assemblies listed below.

● **For positive common**

A type Model: JAZ-PA□※

Red Common wire (+)
Black A side (−)
White B side (−) (Insert when using as a double solenoid)

B type Model: JAZ-PB□※

Red Common wire (+)
Black A side (−)
White B side (−) (Insert when using as a double solenoid)

C type Model: JAZ-PC□※

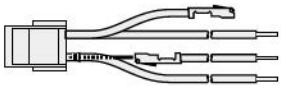

Red Common wire (+)
Black A side (−)
White B side (−) (Insert when using as a double solenoid)
Red Common wire (+)

Note: White lead wire is not available for **JAZ0-P□□**.

※ Lead wire length **Blank**: 300 mm [11.8 in.]
3: 3000 mm [118 in.]

● **For negative common**

A type Model: JAZ-MA□※

Black Common wire (−)
Rad A side (+)
White B side (+) (Insert when using as a double solenoid)

B type Model: JAZ-MB□※

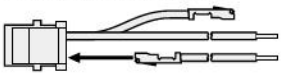

Black Common wire (−)
Rad A side (+)
White B side (+) (Insert when using as a double solenoid)

C type Model: JAZ-MC□※

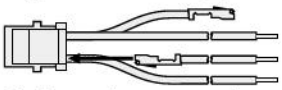

Black Common wire (−)
Rad A side (+)
White B side (+) (Insert when using as a double solenoid)
Black Common wire (−)

Single negative common plug connector unit
Model: JAZ-CM□※

※ Lead wire length **Blank**: 300 mm [11.8 in.]
3: 3000 mm [118 in.]

6. Color identification for the positive common, negative common, single wiring, and double wiring on the easy assembly type manifold plug-in type

Color identification of specifications listed below is possible via a small window on the solenoid side of the valve base.

Blue: Positive common single wiring
Green: Positive common double wiring
Pink: Negative common single wiring
Gray: Negative common double wiring

7. Cabtyre cable

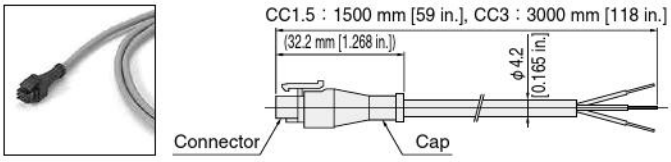

Caution: Exercise caution that this is not dust-proof and drip-proof specification.

Internal circuit

Voltage specification	Internal circuit
24VDC 12VDC	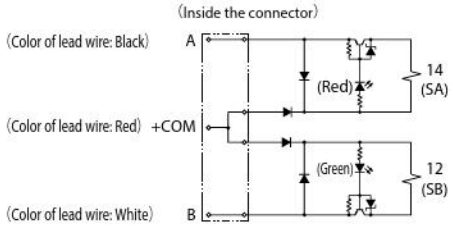
Low-current type 24VDC	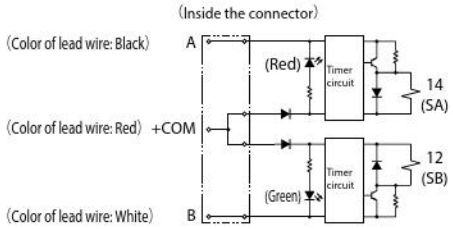
100VAC 120VAC	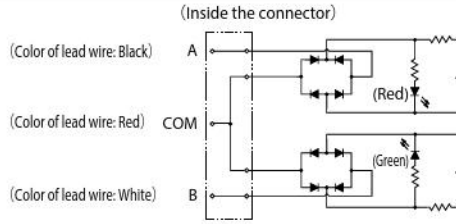

Cautions:
1. Do not apply megger between the pins.
2. Leakage current inside the circuit could result in failure of the solenoid valve to return, or in other erratic operation. Always use at less than the allowable leakage current shown in the solenoid specifications on p.56, 142, and 228, If circuit conditions etc. cause the leakage current to exceed the allowable leakage current, consult us.
3. For the double solenoid specification, avoid energizing both solenoids at the same time (except for tandem 3-port valve).
4. For the housing color, standard type is blue and low-current type is light blue.
5. The low-current type will not operate if the power voltage is gradually increasing. Always apply a suitable voltage.
6. For the T0 type, there is one solenoid.
7. The AC 100 V type has a full - wave rectifier circuit. When SSR is used for solenoid valve control, pay adequate attention to SSR selection, as return problems may occur.

Operating principles for the low-current type

The low-current type uses a timer circuit, as shown on the previous page, that achieves power consumption savings by switching to a holding operations mode after a certain period of time to operate at about 1/4 of the starting power consumption.

● **Power waveform**

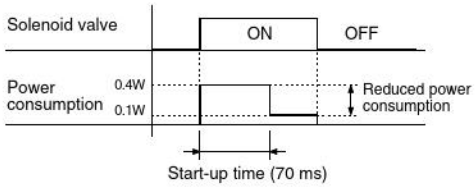

PC board manifold

When connecting a power line to the power supply terminal on the PC board manifold, care should be taken in regard to the following points when connecting.

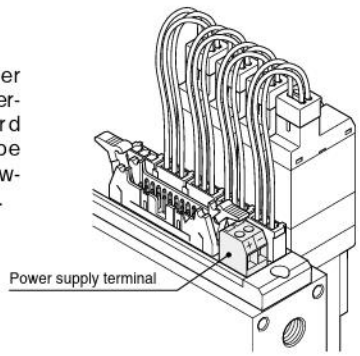

Terminal screw tightening torque: 0.4 N·m [3.5 in·lbf]
Stripped wire length: 7 mm [0.28 in.]
Connecting wire size: 0.13~2.5 mm^2 [0.00020~0.00388 in.^{2}]
AWG: No.26...14

When planning to use crimp-style terminals, use bar terminals.
Recommended crimp-style terminals (bar terminals):
Manufactured by Nichifu, Inc.
Model BT1.25-9-1 (for 0.25~1.65 mm^2 [0.00039~0.00256 in.^{2}])

Wiring of the terminal block

Care should be taken with the terminal screw tightening torque. Overtightening beyond the tightening torque could result in breakage.

Terminal screw tightening torque: Max. 49.0 N·cm [4.3 in·lbf].

Precautions for use of the double solenoid

When using models **F□T1** or **F□T2** (2-position valve) as double solenoid valves, caution should be exercised as energizing the A side solenoid or pushing the manual override button on the A side, while pushing the B side manual override button or in a locked state, or energizing the solenoid on the B side, will cause the valve to switch over the valve position. (At that time, the valve will operate in the same state as the single solenoid valve.)

Manual override

Manual override button (locking and non-locking dual use type)

To lock the manual override, use a small screwdriver to push down the manual override button all the way down and turn it clockwise 90 degrees. To release the manual override, turn the button 90 degrees counterclockwise, which will release the manual override lock by spring action and return it to its normal position. To operate the unit in the same way as the non-locking type, leave the manual override button unturned.

Cautions: 1. The F series valves are pilot type solenoid valves. As a result, the manual override cannot switch the main valve without air supplied from the 1(P) port (X(P2) port for external pilot type).
2. Always release the lock of the manual overrides before commencing normal operation. Caution should be exercised to release the lock of the manual override on the B side that also works as the switching button between the single solenoid and double solenoid (excluding the 3-position valve and tandem 3-port valve). For details, see "Switching from a double solenoid valve to a single solenoid valve" on p.22.
3. Do not attempt to operate the manual override button with a pin or other object having an extremely fine tip. It could damage the manual override button.
4. Take care to avoid excessive turning of the manual override button, it could damage the override.
5. When operating the solenoid valve's manual override button for maintenance etc. always confirm that the solenoid valve's override button has been restored to its normal position, and that the main valve is in the required switching position before restarting operations.

Manual override lever (locking and non-locking dual use type)

To lock the manual override lever, use fingers to push the lever all the way down and turn it clockwise 90 degrees. To release the manual override, turn the lever 90 degrees counterclockwise, which will release the manual override lock by spring action and return it to its normal position. To operate the unit in the same way as the non-locking type, leave the lever unturned.

Caution: Model **F□T1** (2-position valve) has a manual override lever on the A side, and a manual override button with cover on the B side.
Model **F□T2** has a manual override lever on the A side only, and a manual override button on the B side.
The 3-position valve has manual override lever on both the A and B sides.

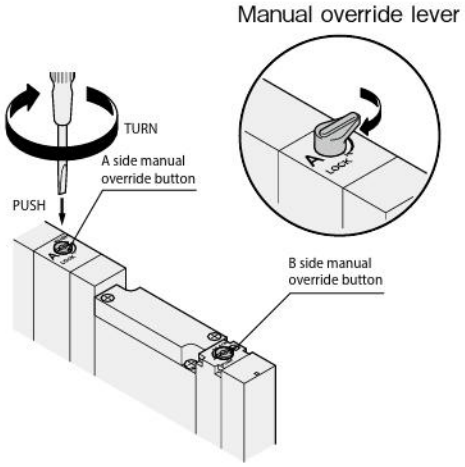

※ Illustration shows the F10 series.

Locking protruding type -83

Use a small screwdriver or the fingers to press down and rotate the manual override button by at least 45 degrees, to lock in place. Either rotation direction is acceptable. In the locked position, rotate further the manual override which will release the manual override lock by spring action and return it to its normal position. If the manual override is not rotated, the unit can be operated in the same way as the non-locking type.

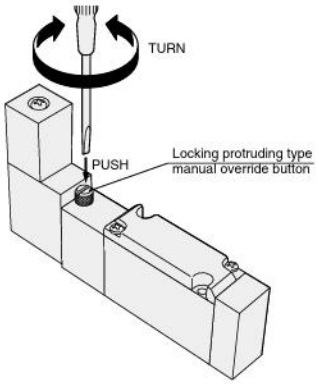

DIN connector

Wiring instructions

Remove the cover mounting screws, and lift the terminal cover off from the solenoid. Use a screwdriver, etc., to push strongly against the terminal body through the hole of the terminal cover's mounting screw, and remove the terminal body.
Slip a cable ground, washer, and cable gasket over a cable, insert the cable into the terminal cover's wiring port, and connect the lead wire to the terminal body (screwdriver blade width of about 3 mm [0.12 in]).

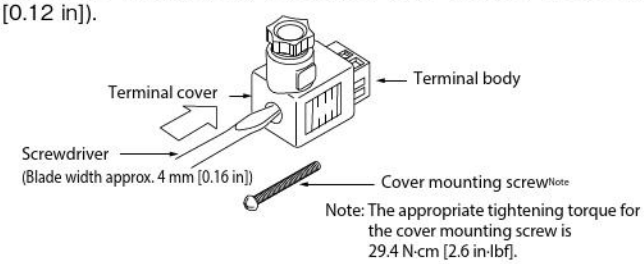

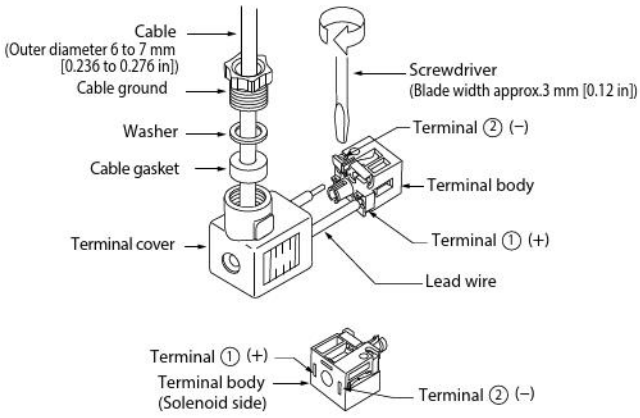

※For the DC24V solenoid with surge suppression, connect (+) to terminal ①, and (−) to terminal ②.

3-port valves

While the F series is a 5-port valve (excluding tandem 3-port valve), it can be used as a normally closed (NC) or normally open (NO) 3-port valve by plugging one of either outlet port 4(A) or 2(B). In this case, leave the exhaust ports 3(R2) and 5(R1) open for use. It can also be used as a double solenoid type 3-port valve.

When using a single use fitting block or female thread block for 3-port

In the F10 and F15 series, a single use fitting block and female thread block for 3-port with one plugged port can be selected at the time of order. (Note: Not available for F18 series.)

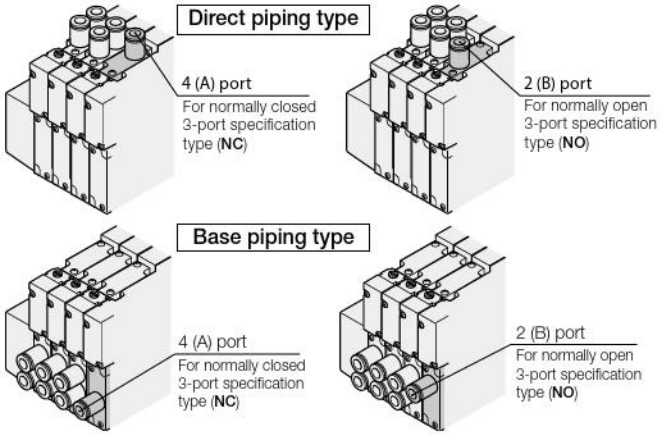

Fitting type	- ※※ A	- ※※ B
Switching type	Normally closed (NC)	Normally open (NO)
For single solenoid setting	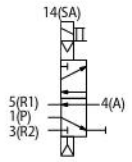	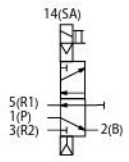
For double solenoid setting	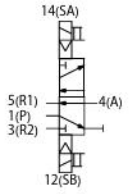	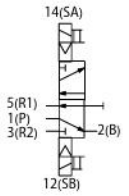

When using a plug

The F10, F15, and F18 series can be used as either a normally closed (NC) or normally open (NO) 3-port valve by plugging either outlet port of 4(A) or 2(B).

Plug position	When the 2(B) port is plugged	When the 4(A) port is plugged
Switching type	Normally closed (NC)	Normally open (NO)
For single solenoid setting	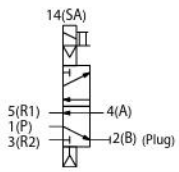	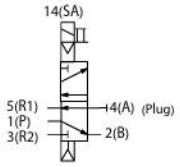
For double solenoid setting	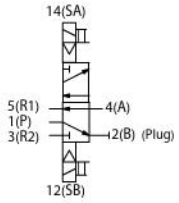	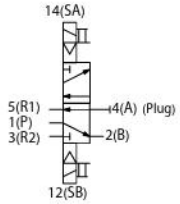

Manifold

Attaching and removing valves

To remove the valve body from the sub-base or manifold, loosen the valve mounting screws (2 places), and lift it up in the direction of the arrow (see the illustration at right). To install it, reverse the above procedure. The recommended tightening torques for the valve mounting screws are as shown below.

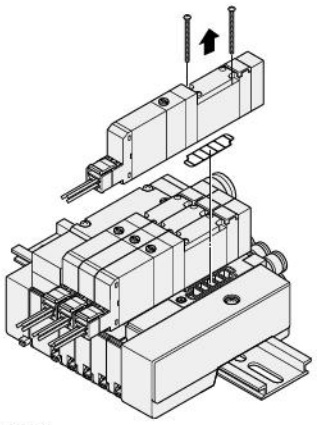

※ Illustration shows the F10 series (split manifold).

N·cm [in·lbf]

Series	Recommended tightening torque
F10	17.6 [1.6]
F15	49.0 [4.3]
F18	49.0 [4.3]

Precautions for using manifold

Observe the following precautions when using the split type, split type serial transmission type, easy assembly type and easy assembly type serial transmission type (except for the monoblock manifold and PC board manifold).

- When using the direct piping type manifold
  Avoid using valves at an operating frequency exceeding 2 Hz, as such use can result in heat-related breakdowns.
- When using the base piping type manifold
  When plugs have been attached on the 4(A) and/or 2(B) ports, avoid using valves at an operating frequency exceeding 2 Hz, as such use can result in heat-related breakdowns.

Stop valve usage procedure (F10, F15 series)

Mount a stop valve on a manifold to stop the air supply to valves on the individual station. For the operation procedure, use a small screwdriver or the hand to press down and rotate the stop valve manual knob clockwise 90 degrees to lock in place, shutting off the air supply. In the locked position, rotate the stop valve manual knob counterclockwise 90 degrees, and air pressure returns the stop valve manual knob to its original position, releasing the lock. Note that use of the stop valve reduces the flow rate volume by about 30%.

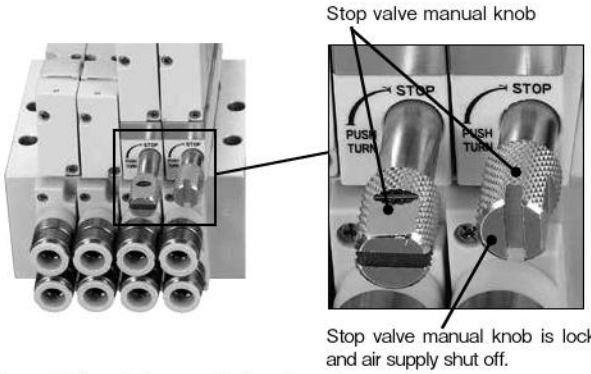

Cautions:
1. Do not disassemble the stop valve.
2. When using a stop valve to remove the valve, be careful of residual pressure in the affected station.
3. When using a stop valve to remove the valve, be aware that exhaust from other stations can be exhausted through the stop valve's exhaust hole. If this will cause a problem during use, when ordering the manifold, select the back pressure prevention valve (**-E1**).
4. To use a stop valve in combination with a back pressure prevention valve, select the combination when ordering the manifold. The back pressure prevention valve (**F1□Z-E1**) in additional parts cannot be installed after purchase.
5. Do not release the locked stop valve manual knob when valves have been removed by using the stop valve.

Port isolator

In the split manifold and the easy assembly type, installing port isolators to the 1(P), 3(R2) and 5(R1) ports between each station isolates the air path between stations equipped with port isolators and stations with smaller station numbers. However, a piping block must be placed on both ends.

- ●Port isolator for the 1 (P) port — Can supply two different pressures
  - Model: Split manifold F□Z-SP / Easy assembly type F□ZX-XSP
- ●Port isolators for the 3 (R2), 5 (R1) ports — Can isolate exhaust air (prevents exhaust interference)
  - Model: Split manifold F□Z-SR / Easy assembly type F□ZX-XSR
- ●Port isolators for the 1 (P), 3 (R2), 5 (R1) ports — Can supply two different pressures, and can isolate exhaust air (prevents exhaust interference)
  - Model: Split manifold F□Z-SA / Easy assembly type F□ZX-XSA

※□ denotes valve size.

Split manifold
〔F10, F15 series〕

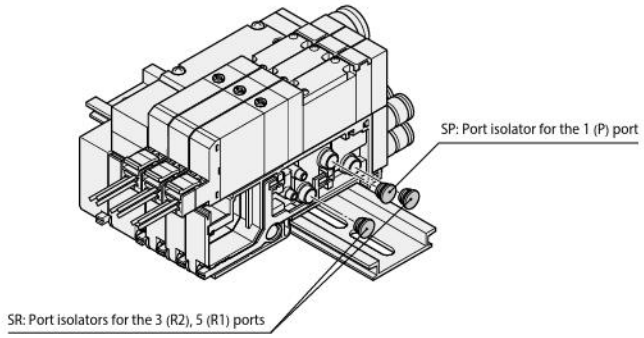

Split manifold
〔F18 series〕

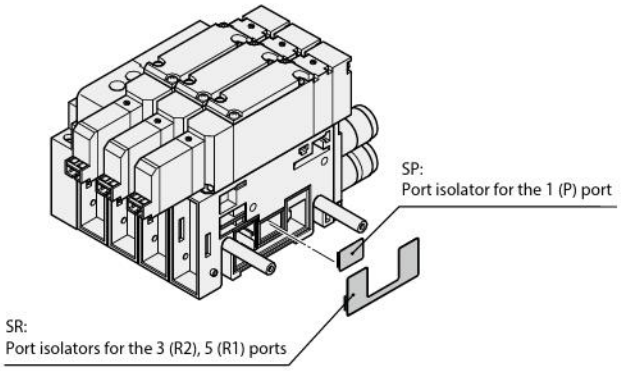

Easy assembly type
[F10, F15 Series]

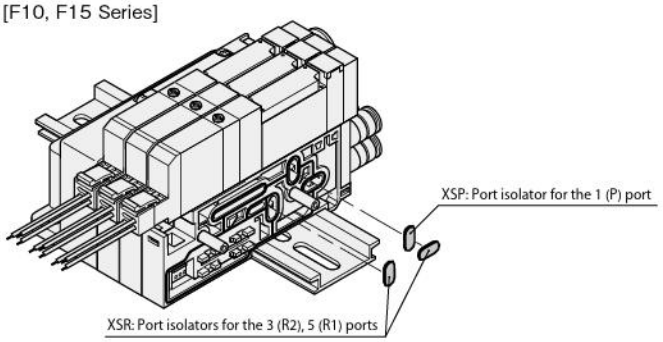

Caution: Installing port isolators requires the disassembly and re-assembly of manifolds. See the disassembly illustration, unit adding procedure, and cautions on p.30-37.
However, since the F18 series serial transmission compatible manifold cannot be disassembled, port isolators cannot be installed on it after purchase.

Precautions for the use of individual air supply and exhaust spacers

By mounting an individual air supply or exhaust spacer on the manifold, the air supply or exhaust can be operated individually on the unit. It is also effective in preventing erratic operation due to back pressure. Caution should be exercised when spacers are used, as the effective area is reduced by about 30%. If mounting additional spacers to an existing unit, observe the following items:

● Spacer mounting procedure (F10 split manifold, F10 and F15 easy assembly type)

① Loosen the valve mounting screws where the individual air supply or exhaust spacer will be installed, and remove the valve.
② Install the gaskets and exhaust valve provided with the individual air supply or exhaust spacer, and use the mounting screws provided to secure the valve on the manifold (see Fig. 7).

Remark: When attaching fittings to the F10 spacer, use the recommended fittings shown below:
TSH4-M5M, TSH4-M5, TSH6-M5M, TS4-M50, TS4-M5M

● Spacer mounting procedure (F15 and F18 split manifold)

① Loosen the valve mounting screws where the individual air supply or exhaust spacer will be installed, and remove the valve.
② Open the cover of the manifold, and pull out the plug-in connector in the near side direction (for the plug-in type) (see Fig. 8).
③ Insert the plug-in connector firmly into the connector attaching section of the individual air supply or exhaust spacer, and then close the cover, while watching to ensure that the lead wires are not caught by the cover (for the plug-in type) (see Fig. 9).
④ Attach the gasket and exhaust valve provided with the individual air supply or exhaust spacer, and use the mounting screws provided to mount the valve on the manifold.

Cautions: Locations where the spacers are mounted make the valve height higher by the height of the spacer (see the dimensions below).

● Muffler for the individual exhaust spacer

A muffler for the individual exhaust spacer is available.
For dimensions, see p.129, 225, and 263.

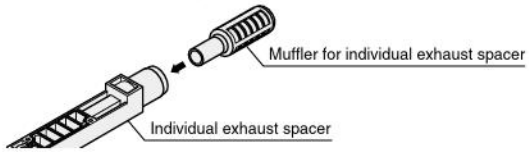

● Dimensions Unit: mm [in.]

F10Z-N□□ (For F10 series) Mass 7 g [0.25 oz.]
F10ZX-XN□□ (For F10 easy assembly type)

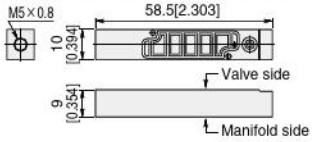

F15Z-N□□ (For F15 series) Mass 26 g [0.92 oz.]
F15ZX-XN□□ (For F15 easy assembly type)

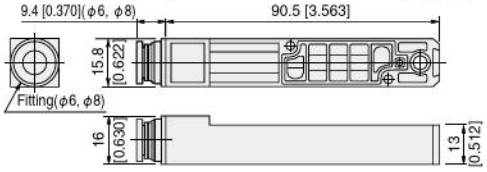

F18Z-N□□ (For F18 series) Mass 41 g [1.45 oz.]

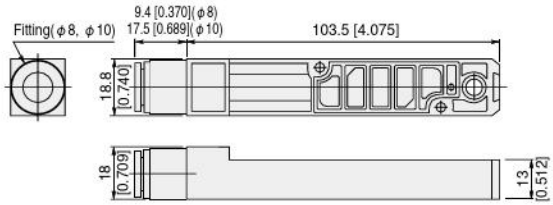

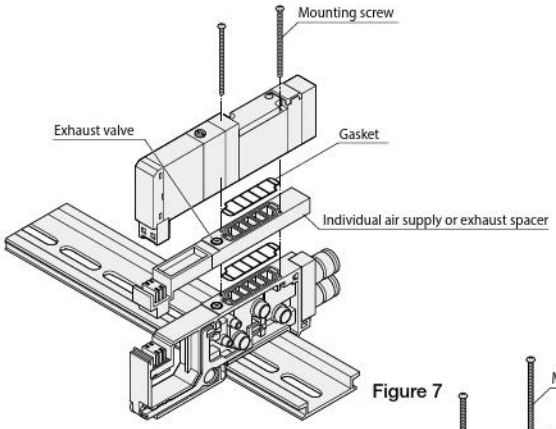

Figure 7

F10 series
(Illustration shows the split manifold plug-in type)
*The same applies for the F10 and F15 easy assembly type plug-in type.

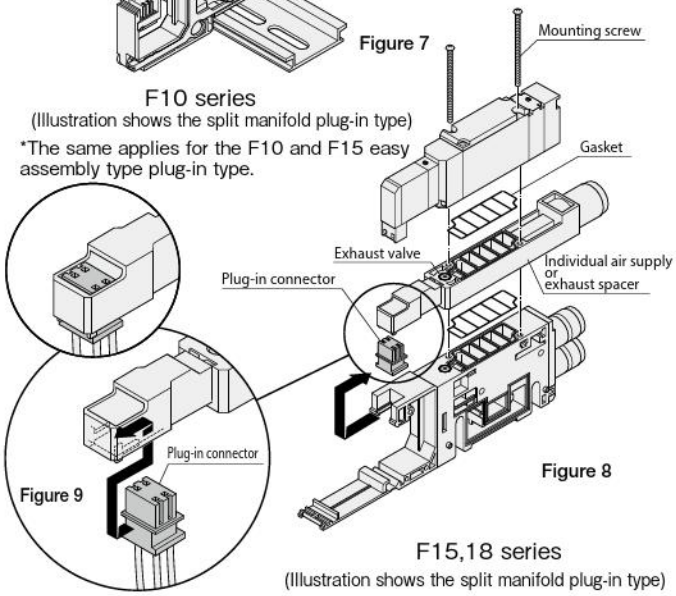

Figure 8

Figure 9

F15,18 series
(Illustration shows the split manifold plug-in type)

F10Z-P□□ (For F10 series) Mass 9 g [0.32 oz.]
F10ZX-XP□□ (For F10 easy assembly type)

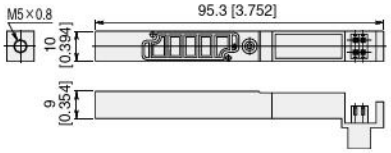

F15Z-P□□ (For F15 series) Mass 29 g [1.02 oz.]

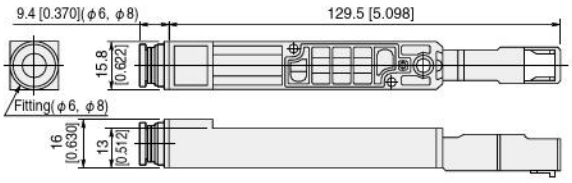

F15ZX-XP□□ (For F15 easy assembly type) Mass 32 g [1.129 oz.]

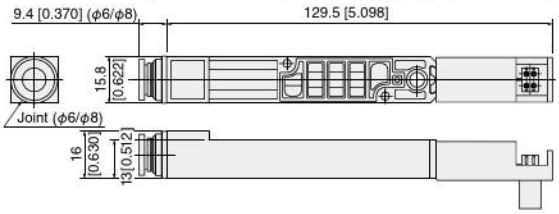

F18Z-P□□ (For F18 series) Mass 44 g [1.55 oz.]

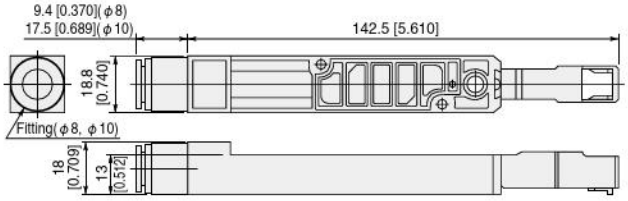

Precautions for use of the back pressure prevention valve (F10, F15 series)

A back pressure prevention valve can be mounted on the manifold to prevent erratic operation of the cylinder due to exhaust from other valves. It is particularly effective when using a single acting cylinder or when using an exhaust center valve. Note that when a back pressure prevention valve is used, the OUT-EXH flow rate volume is reduced by as much as 30%. In addition, since the back pressure prevention valve allows back pressure leaks, be careful to avoid letting the manifold exhaust port throttle the exhaust air. When mounting the back pressure prevention valve on an existing system, observe the following points.

① Loosen the valve screws mounting the back pressure prevention valve, and remove the valve.

② For a monoblock manifold, temporarily remove the gasket between the valve and manifold, insert the back pressure prevention valve into the exhaust port, attach the gasket back in place, and then mount the valve.

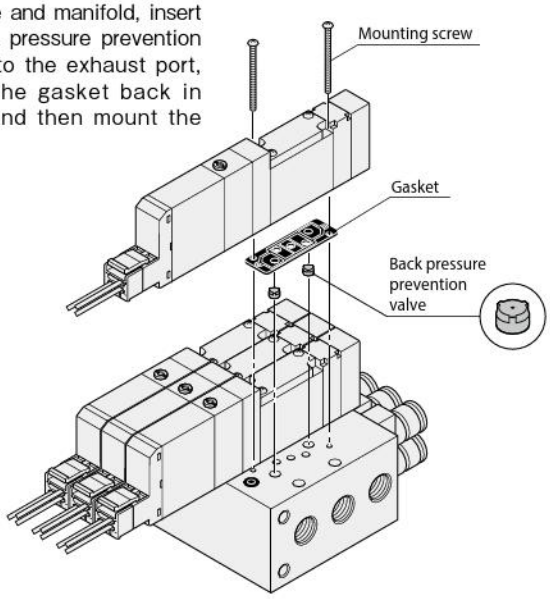

For a split type manifold, insert the back pressure prevention valve into the exhaust port, attach the dedicated gasket and plate provided, and then mount the valve.

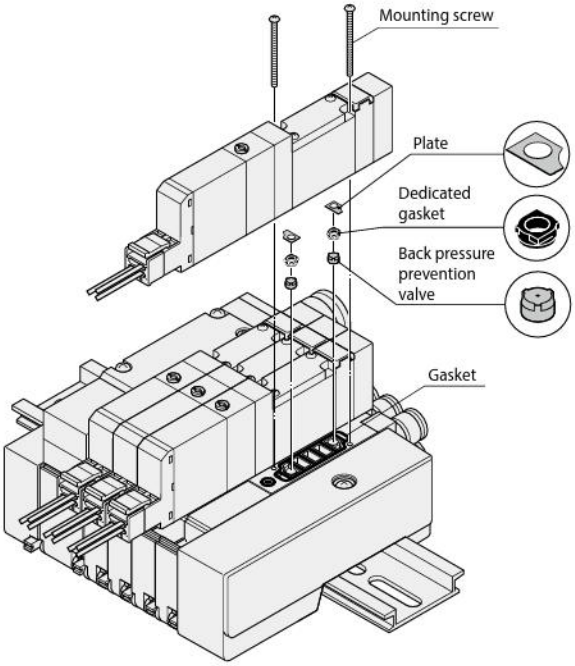

Mounting screw tightening torque: F10 series 17.6 N · cm [1.6 in•lbf]
F15 series 49.0 N · cm [4.3 in•lbf]

Changing the connector bracket direction (F10, F15 series)

● Split manifold

Remove the wiring block mounting screws, position the connector bracket as shown in the illustration, and rotate the connector 90 degrees so that it faces outward. The connector can be changed to either the top surface (vertical) wiring or side surface (horizontal) wiring positions.

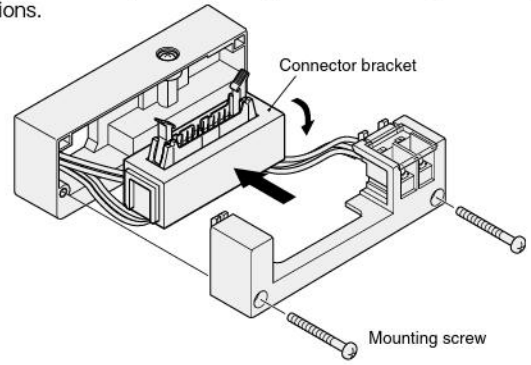

Mounting screw tightening torque: 49 N·cm [4.3 in•lbf]

●Easy assembly type

The direction can be changed by grasping the knobs on both ends of the connector and unlocking it (Illustration shows the flat cable type. The same applies for the D-sub connector.).

<Procedure> ① Grasp the knobs. ② Turn the connector in the direction of the arrow. ③ Confirm that the knobs have returned to their original position.

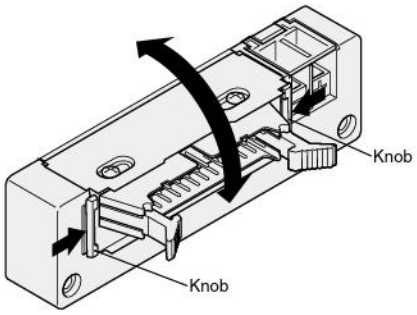

Securing the manifold in place

● Split manifold

When securing a DIN rail mounting type manifold to the installation surface, use the number of screws table below as a guide, depending on the installation direction and with or without vibration, to secure the DIN rail in place using screws. If not secured in place, be aware that there is a possibility of air leaks or other problems occurring.

Mounting condition	Number of screws			
Horizontal mounting	2 screws or more			
Vertical mounting or vibration area	2 to 5 units	6 to 10 units	11 to 15 units	16 to 20 units
	2 screws or more	3 screws or more	4 screws or more	5 screws or more

●Easy assembly type

When securing a DIN rail mounting type manifold to the installation surface, use the number of screws table below as a guide, depending on the installation direction and with or without vibration, to secure the DIN rail in place using screws. If not secured in place, be aware that there is a possibility of air leaks or other problems occurring.

Take care when using the easy assembly type in a location subject to vibrations, as the load on the DIN fitting will be high. Or, use the direct mounting type.

Direct mounting screw tightening torque: 74 N · cm [6.5 in · lbf]

Fitting

Piping

<Valve base>

1. Procedure for switching between the base piping type and the direct piping type

Base piping and direct piping can be switched by replacing the plate with a fitting block or a female thread block (see Fig. 10).

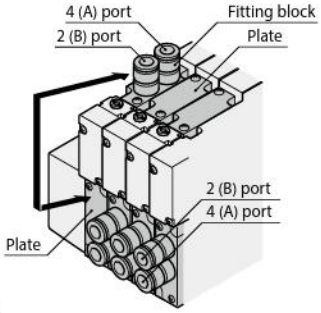

Figure 10

※ Illustration shows the F10 series.

Cautions: 1. Firmly tighten the screws after completing a re-combination. Recommended tightening torques are shown below.
2. Perform piping carefully in regards to the locations of each connection port (see Figs. 11, 12).
3. Care should be taken not to lose the gaskets while changing plates.

N·cm [in·lbf]

Series	Recommended tightening torque
F10	17.6 [1.6]
F15	49.0 [4.3]
F18	49.0 [4.3]

<Piping block>

● **Direct piping type**

For **F10**, **F15** series

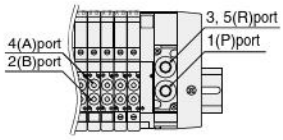

※ Diagram shows the F10 series.

For **F18** series

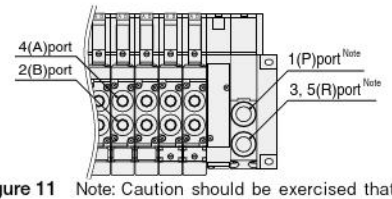

Figure 11 Note: Caution should be exercised that the positions of the 1(P) and 3, 5(R) ports are reversed from their positions in the F10 and F15 series.

● **Base piping type**

Port locations for **F10**, **F15**, **F18** series are as shown in Fig. 12.

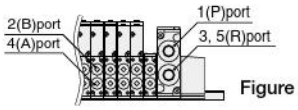

Figure 12

※ Diagram shows the F10 series.

Series	Recommended tightening torque N·cm [in·lbf]	
	Split manifold	Easy assembly type
F10	58.8 [5.2]	49.0 [4.3]
F15	58.8 [5.2]	58.8 [5.2]
F18	58.8 [5.2]	-

2. Attaching fittings to female thread blocks

When attaching fittings to female thread blocks, secure with the tightening torques shown below or less.

Screw size	Tightening torque N·cm [in·lbf]
Rc 1/8, NPT1/8	686 [60.7]
Rc 1/4, NPT1/4	882 [78.1]

※ For M5 and -10-32UNF, tighten at the recommended torques for the fittings used.

3. Attaching fittings to piping blocks〔F18Z(G)-PM(P)〕

To attach fittings to the female thread type piping block of the F18 series, remove the piping block portion (the triangular-shaped block portion), screw the fittings into the 1(P) and 3, 5(R) ports while holding the piping block by applying a wrench to its metal portion. The tightening torque for the mounting (two M3 screws) of the piping block after the fittings have been attached should be 58.8 N·cm [5.2 in·lbf].

Dual use fittings (With dual use fitting blocks)

The F series dual use fitting blocks employ dual use fittings for different tube sizes, which can connect tubes of 2 different outer diameters.

● **Attaching and removing tubes**

When connecting tubes, insert an appropriate size tube until it contacts the tube stopper, and then lightly pull it to check the connection. For tube removal, push the tube against the tube stopper, then for large tube sizes, push on the release ring and at the same time pull the tube out. For small tube sizes, push on the outer ring by pressing the release ring and simultaneously pull the tube out (see Fig. 13).

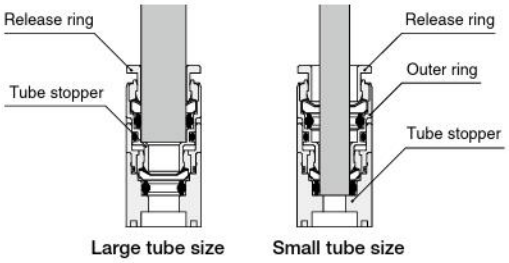

Figure 13

Usable tubes

Either a nylon or urethane tube can be used.
Use tubes with an outer diameter tolerance within ±0.1 mm [0.004 in.] of the nominal diameter, and ensure the ovalness (difference between the large diameter and small diameter) is 0.2 mm [0.008 in.] or less.
(Using a Koganei tube is recommended.)

Cautions: 1. Do not use extra-soft tubes since their pull-out strength is significantly reduced.
2. Only use tubes without scratches on their outer surfaces. If a scratch occurs during repeated use, cut off the scratched portion.
3. Do not bend the tube excessively near the fittings.The minimum bending radii for nylon tubes are shown in the table below.
4. When attaching or removing tubes, always stop the air supply. In addition, always confirm that air has been completely exhausted from the manifold.

mm [in.]

Tube size	Minimum bending radius
φ 4	20 [0.8]
φ 6	30 [1.2]
φ 8	50 [2.0]
φ 10	80 [3.1]

F10 and F15 Series Disassembly Diagram of Split Manifold Non-Plug-in Type

Figure 1

Disassembly example: For F10 series

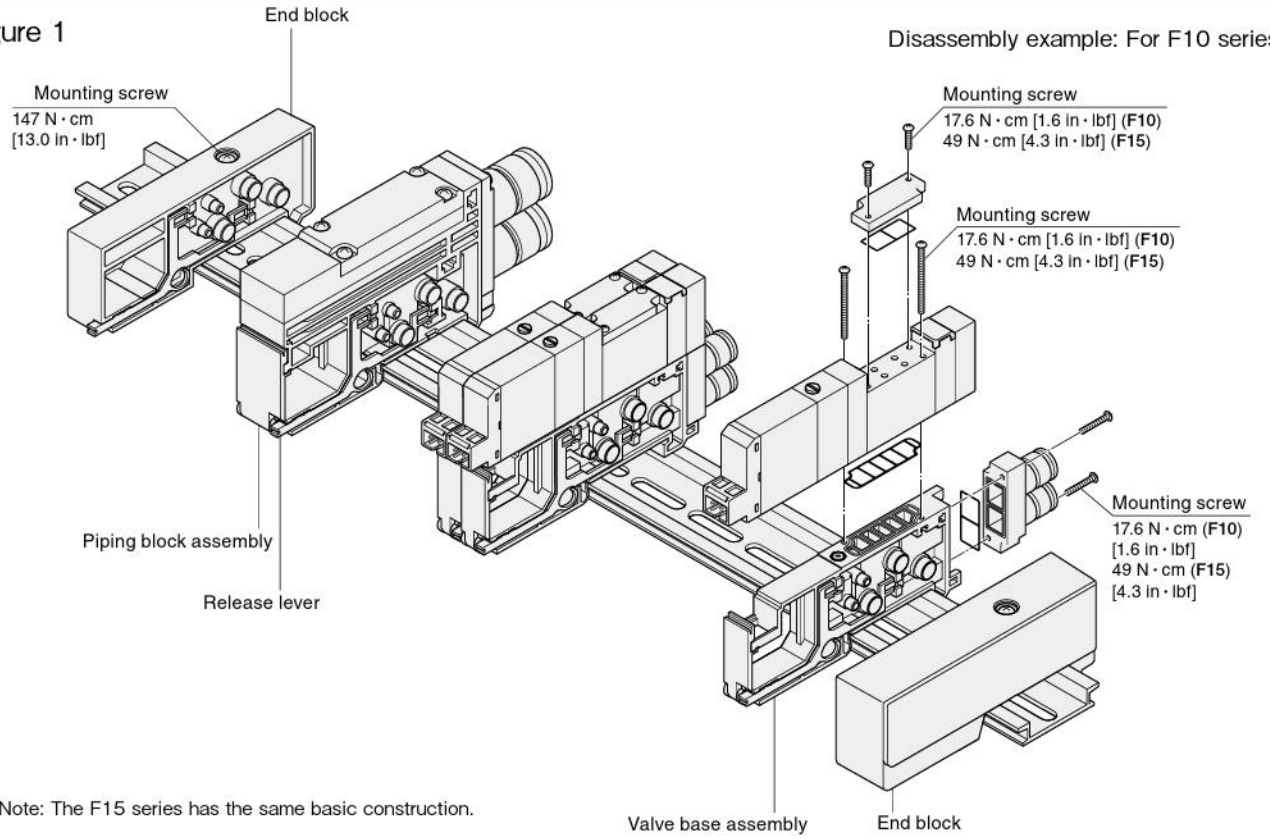

Note: The F15 series has the same basic construction.

Manifold Unit Adding Procedure (F10 and F15 Series Non-Plug-in Type)

■ Adding a valve base unit

Use the valve base assembly for adding valve base units.

① Loosen the mounting screw on the end block until it can slide (see Fig. 1).
Note: For the F15 series, loosen the mounting screws on both the left and right end blocks (2 screws each).

② Press the release lever on the valve base assembly where the new unit is to be added, and disconnect the link between the bases.

③ Mount the valve base assembly to be added on the DIN rail as shown in Fig. 2.

④ Return the release lever of the valve base assembly disassembled in step ② to its normal position, as shown in Fig. 3. In addition, set the release lever for the valve assembly being added to the same position, then press the bases together until they connect and click into place.

⑤ Press the bases together from both sides to ensure that there is no gap between them, and then tighten the end block mounting screws, and install the units in place on the DIN rail (see Fig. 5). Tightening torque: 147 N·cm [13.0 in·lbf]
Notes: 1. Always follow the steps shown in Fig.4 when tightening the end block mounting screws for the F15 series.
2. Confirm that the DIN rail mounting hooks secure the DIN rail (see Fig. 5).

【Caution】

- Always cut off the power and air supply before working. In addition, always confirm that air has been completely exhausted from the manifold.
- Care should be exercised to prevent the gasket from becoming caught or lost.
- Before supplying air to the manifold, always confirm that the bases are connected, the end block mounting screws are tightened, etc. Supplying air when either of the end blocks is not secured to the DIN rail could result in air leaks or in separation of manifold bases.
- When there are a large number of valves simultaneously delivering air to the secondary side, or when there are a large number of valves overall, we recommend using 2 air supplies and exhausts (on each side).

Adding units to the piping block assembly should be performed in the same way as adding units of the valve base assembly.

Figure 2

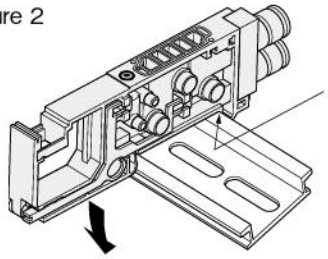

Figure 3

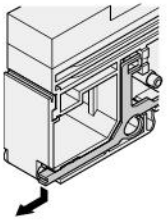

Pressing down lightly on the release lever will return it to its normal position.

Figure 4

● Tightening order of screws (for F15 series only)

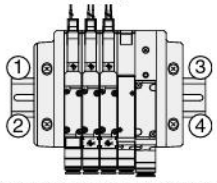

Tightening torque: 147 N·cm [13.0 in·lbf]

Figure 5

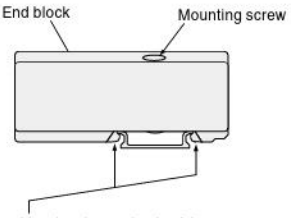

Use hooks on both sides to secure the DIN rail in place.

● Removing the F15 series end block from the DIN rail

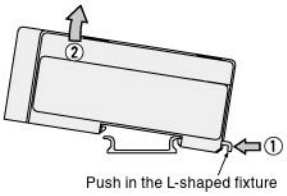

Push in the L-shaped fixture

※ The end block for the F10 series does not include an L-shaped hook. To remove the end block from the DIN rail, loosen the end block mounting screws, and lift it off.

F18 Series Disassembly Diagram of Split Manifold Non-Plug-in Type

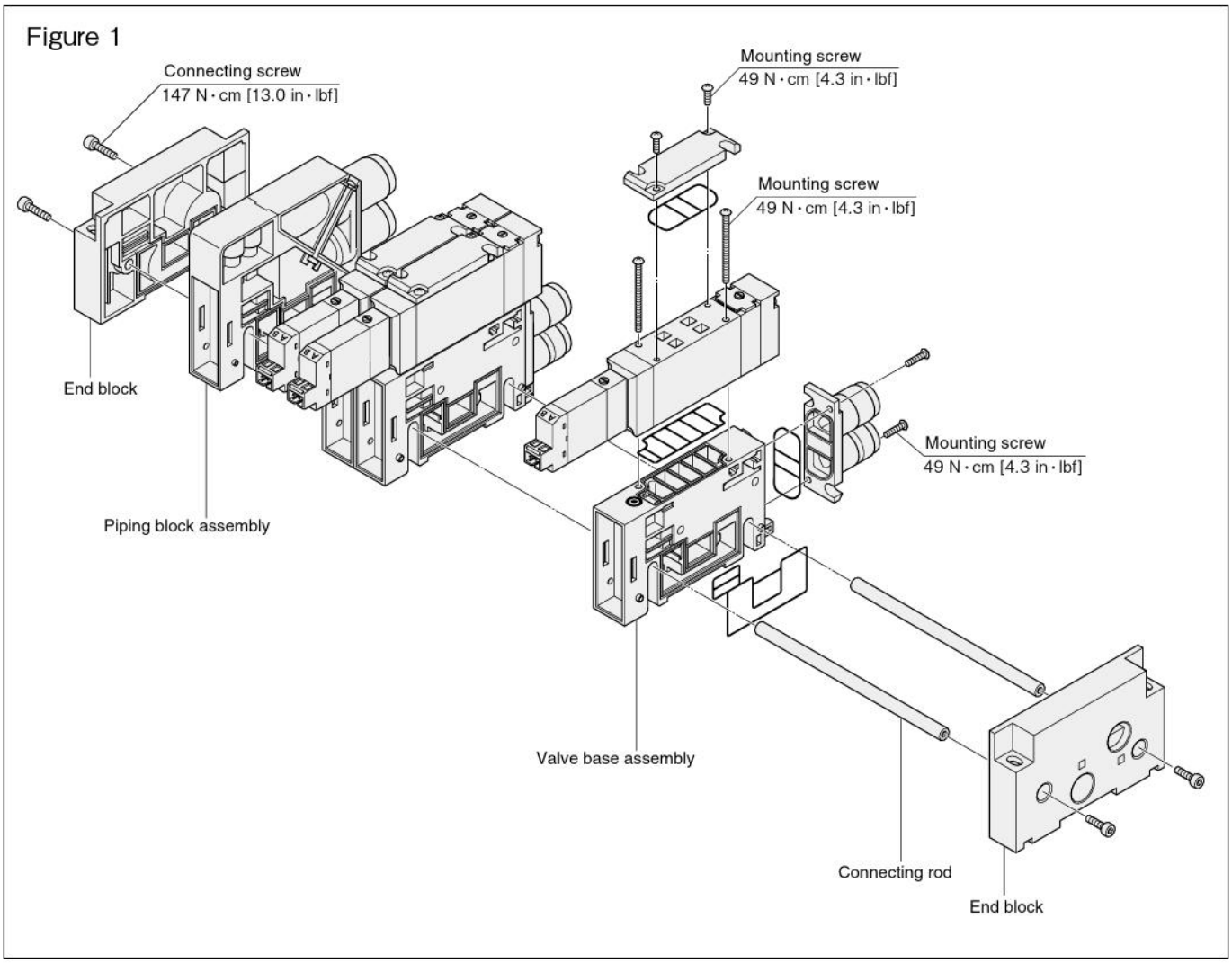

Manifold Unit Adding Procedure (F18 Series Non-Plug-in Type)

■ Adding a valve base unit

Use the valve base assembly and unit-adding connecting rod to add valve base units.

① Remove the connecting screws on the end block and separate the end block from the manifold (see Fig. 1).

② Install the connecting rods to be added, open up the spaces where the units are being added, position the gaskets onto the valve base assemblies being added, and fit the units on the connecting rods from above. At this time, securely mount the units so that no gap is left between the added valve base assemblies and the upper surface of the connecting rods.

③ Install gaskets onto the end blocks removed in step ①, and retighten the connecting screws. At this time, use a hexagon bar wrench to hold the connecting screws on the opposite side in place so as to prevent the screws from slipping while securing them into place. Tightening torque: 147 N·cm [13.0 in·lbf]

【Caution】

- Always cut off power and air supply before working. In addition, always confirm that air has been completely exhausted from the manifold.
- Care should be exercised to prevent the gasket from becoming caught or lost.
- Before supplying air to the manifold, always confirm that the bases are securely connected, the end block connecting screws on both sides are tightened, etc. Supplying air when either of the end blocks is not secured to the DIN rail could result in air leaks or in separation of manifold bases.
- When there are a large number of valves simultaneously delivering air to the secondary side, or when there are a large number of valves overall, we recommend using 2 air supplies and exhausts (on each side).

Adding units to the piping block assembly should be performed in the same way as adding units to the valve base assembly.

F10 and F15 Series Disassembly Diagram of Split Manifold Plug-in Type

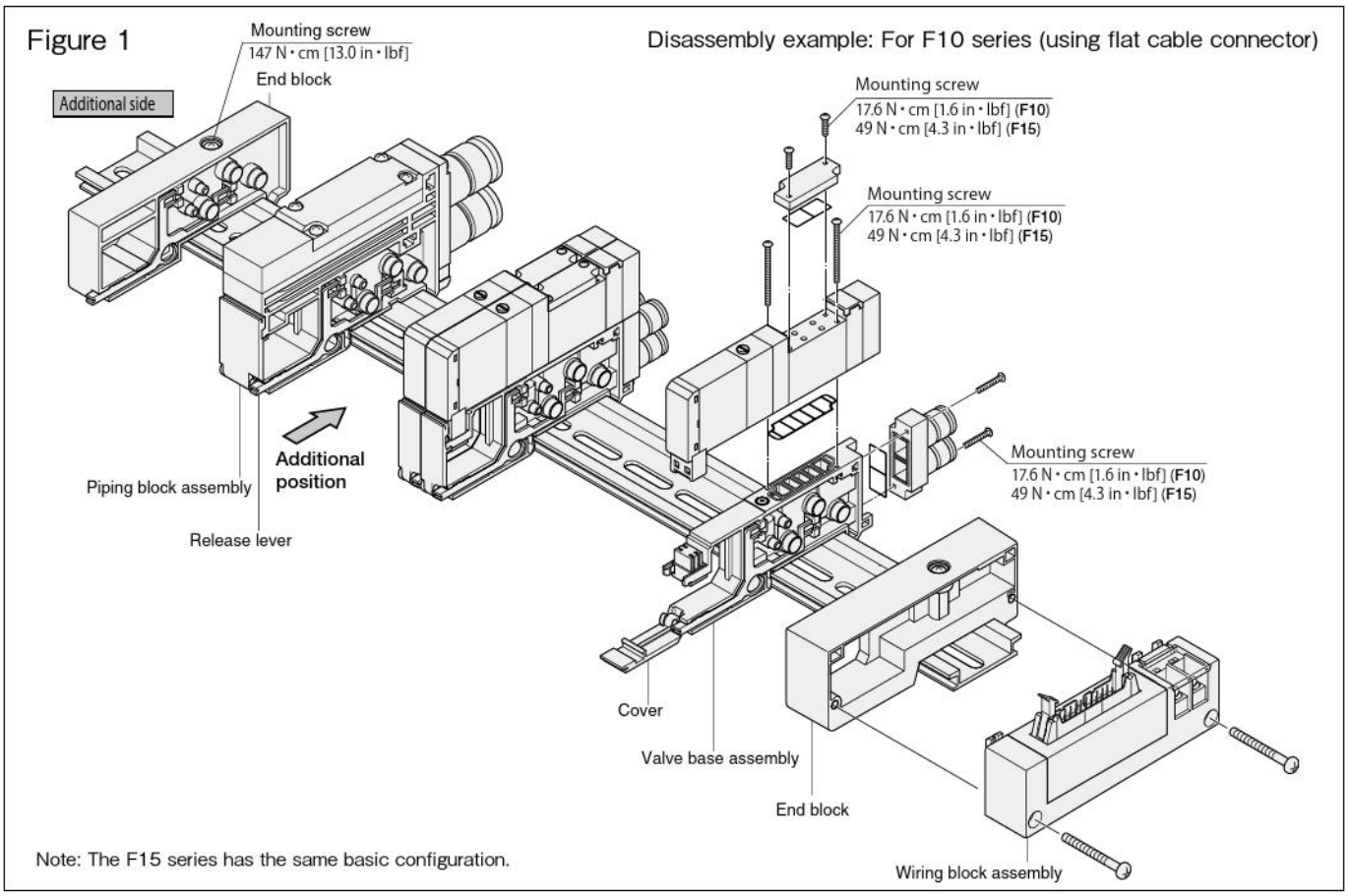

Manifold Unit Adding Procedure (F10 and F15 Series Plug-in Type)

■ Adding a valve base unit

Use the valve base assembly for adding valve base units.

① Loosen the mounting screw on the end block until it can slide (see Fig. 1).

Note: For the F15 series, loosen the mounting screws on both the left and right end blocks (2 screws each).

② Add units on the additional side (with the solenoid on top and its right) shown in Fig. 1. To split up at additional unit locations, push the piping base assembly's release lever, and release the connections between the bases.

③ Mount the valve base assembly to be added on the DIN rail as shown in Fig. 2.

④ Return the release lever of the piping block assembly disassembled in step ② to its normal position, as shown in Fig. 3. Set the release levers on the additional valve bases in the same position, and press all the bases together until they click into place, while watching to ensure that the lead wires are not caught by the cover.

⑤ Press the bases together from both sides to ensure that there is no gap between them, and then tighten the end block mounting screws, and install the units in place on the DIN rail (see Fig. 5). Tightening torque: 147 N·cm [13.0 in·lbf]

Notes: 1. Always follow the steps shown in Fig. 4 when tightening the end block mounting screws for the F15 series.
2. Confirm that the DIN rail mounting hooks secure the DIN rail (see Fig. 5).

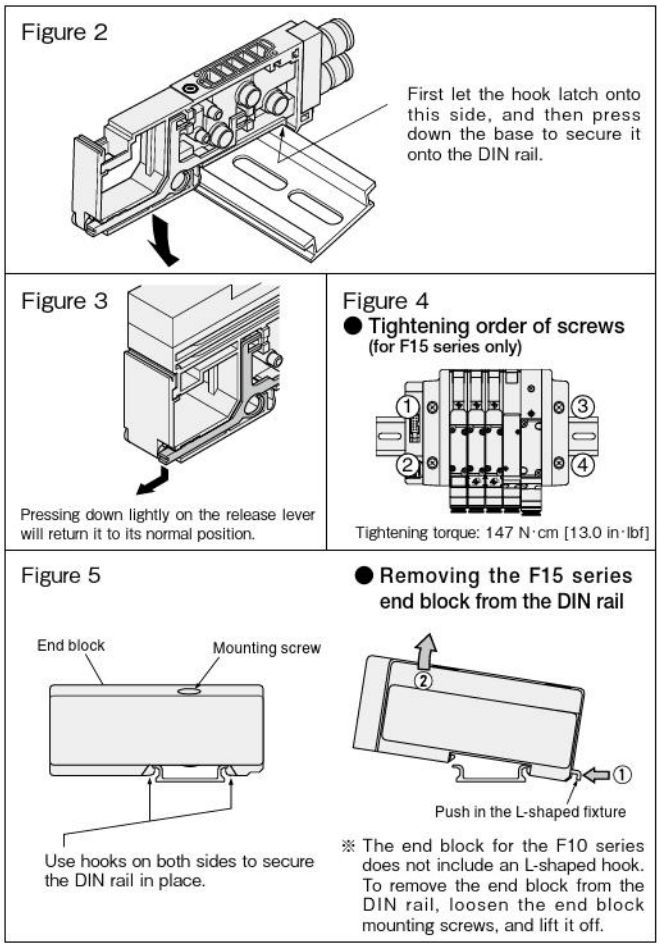

■ Wiring Procedure

① Use a flatblade screwdriver to open all of the covers (see Fig. 1). Loosen the mounting screws of the valve next to the valve base to be added, remove the valve, and remove the plug-in connector (see Fig. 6).

② The end terminal lead wire (short red wire) is inserted into the pin insert section (No.3) of the plug-in connector that was removed in step ① (see Fig. 7).
(When shipping, end terminal lead wire is inserted into the plug-in connector of the end unit valve.) Remove this end terminal lead wire, and insert it into the insert section (No.3) of the plug-in connector for the valve base assembly to be added. Next, insert the common wire (red) of this plug-in connector into the insert section (No.3) of the removed plug-in connector.

Note: When inserting the lead wire, confirm that the short bar of the plug-in connector's common wire insert section has been attached.

③ Install each of the wired plug-in connectors in step ② to the valve base, and mount the valve.

④ Remove the wiring block mounting screws and place the connector bracket in the position shown in Fig. 8, then connect the lead wire (white) of the added valve base after confirming the pin locations. (For details, see the "Detailed diagram of wiring block internal connections" on p.34, 35)

⑤ Return the connector bracket to its original position, tighten the wiring block mounting screws in place, and then install the cover while exercising caution that the lead wires are not trapped by the cover.

【Caution】

- Always cut off the power and air supply before working. In addition, always confirm that air has been completely exhausted from the manifold.
- When removing lead wires from the plug-in connector, use a tool with a fine tip (such as a small screwdriver) to press lightly on the contact hook from a hole on the side of the plug-in connector, and pull out the lead wire. When re-inserting the lead wire to the connector, spread the contact hooks so that they face outward, and then insert the lead wire into the plug-in connector. At this time, pull the lead wire lightly to confirm that it is securely inserted.
- Always connect the end terminal lead wires (see Fig. 7).
- Care should be exercised to prevent the gasket from becoming caught or lost.
- Before supplying air to the manifold, always confirm that the bases are connected, the end block mounting screws are tightened, etc. Supplying air when either of the end blocks is not securing the DIN rail could result in air leaks or in separation of manifold bases.
- Caution should be exercised as the number of valve units that can be added is limited in the manifold, by the wiring specifications and wiring connection types, etc. For details, see the "Table for maximum number of valve units by wiring specification," on p.66.
- When there are a large number of valves simultaneously delivering air to the secondary side, or when there are a large number of valves overall, we recommend using 2 air supplies and exhausts (on each side).

Adding units to the piping block assembly should be performed in the same way as adding units to the valve base assembly. In addition, when the wiring block and piping block are mounted side-by-side, always mount the wiring block on the outside of the piping block, for structural reasons.

Valve tightening torque N·cm [in·lbf]

Series	Torque
F10	17.6 [1.6]
F15	49.0 [4.3]

Figure 6

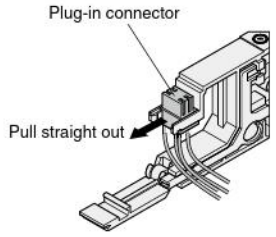

Figure 7

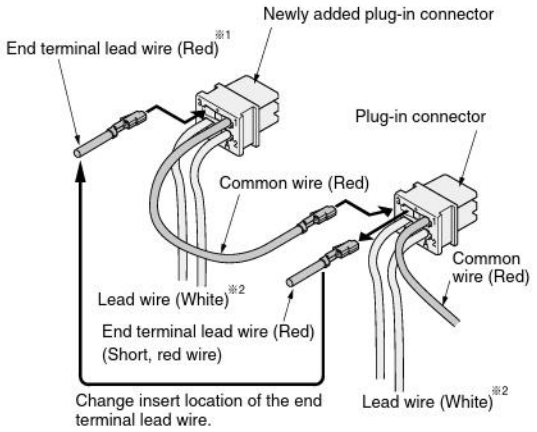

※ 1: Always insert end terminal lead wire.
※ 2: Shows when both A and B are used.

Figure 8

Note: For the serial transmission type (integrated transmission block), remove the serial transmission block.

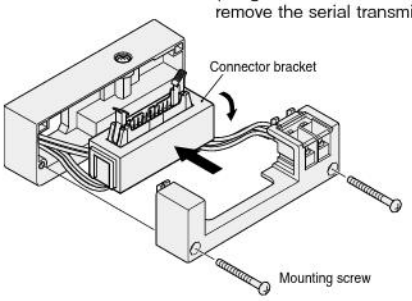

Mounting screw tightening torque: 49 N・cm [4.3 in・lbf]

See "F10, F15 Series Detailed Diagram of Wiring Block Internal Connections" on p.38, 39.

F18 Series Disassembly Diagram of Split Manifold Plug-in Type

Figure 1

Disassembly example: For mounted flat cable connector

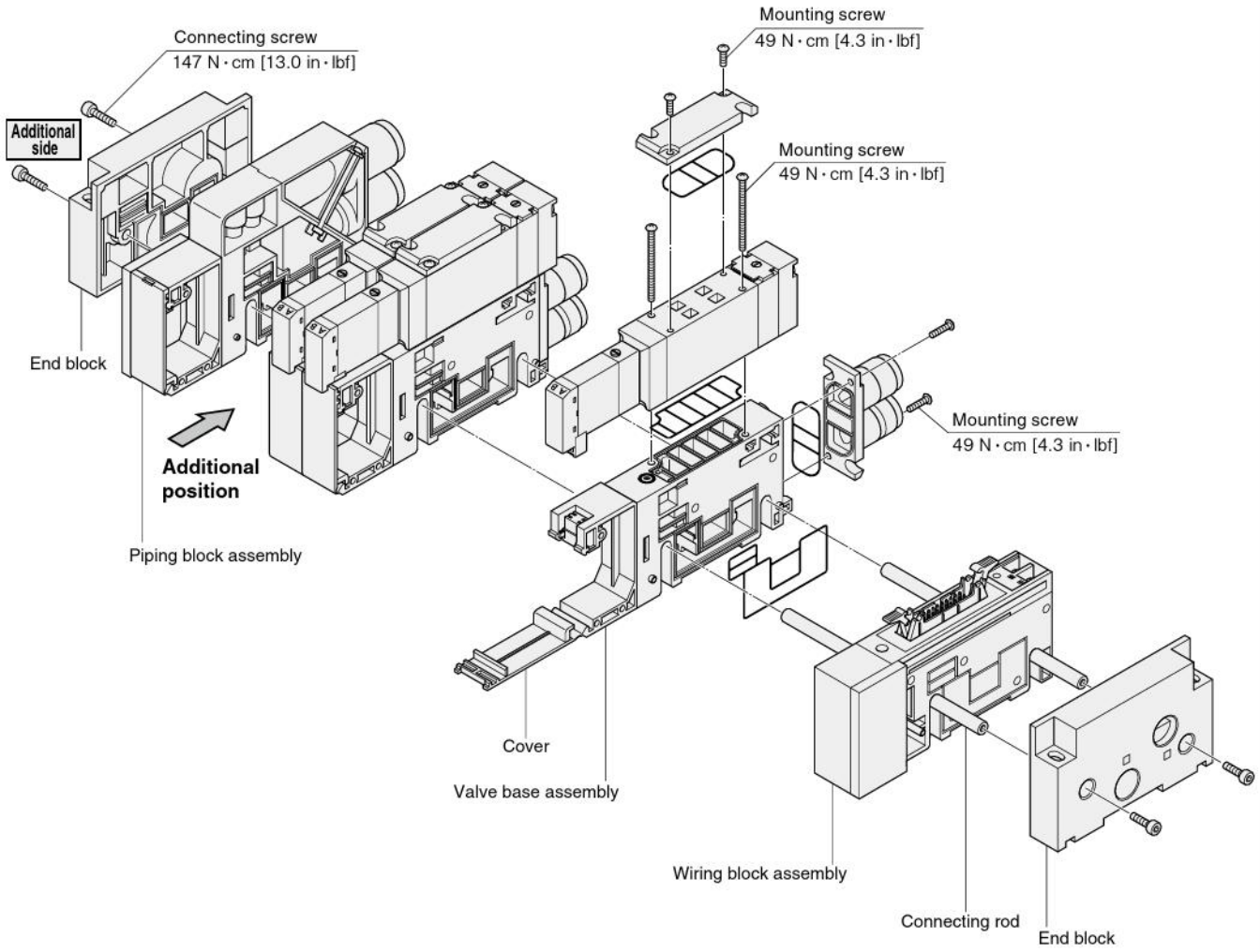

Manifold Unit Adding Procedure (F18 Series Plug-in Type)

■ Adding a valve base unit

Use the valve base assembly for adding valve base units.

① Remove the connecting screws on the additional side end block and separate the end block from the manifold (see Fig. 1).

② Install the connecting rods to be added, open up spaces where the units are being added, position the gaskets onto the valve base assemblies being added, and fit the units on the connecting rods from above. At this time, securely mount the units so that no gap is left between the added valve base assemblies and the upper surface of the connecting rods.

③ Install gaskets onto the end blocks removed in step ①, and retighten the connecting screws. At this time, use a hexagon bar wrench to hold the connecting screws on the opposite side in place so as to prevent the screws from slipping while securing them into place. Tightening torque: 147 N·cm [13.0 in·lbf]

■ Wiring Procedure

① Use a flatblade screwdriver to open all of the covers (see Fig. 1). Loosen the mounting screws of the valve next to the valve base to be added, remove the valve, and remove the plug-in connector (see Fig. 2).

② The end terminal lead wire (short red wire) is inserted into the pin insert section (No.3) of the removed plug-in connector that was removed in step ① (see Fig. 3).
(When shipping, end terminal lead wire is inserted into the plug-in connector of the end unit valve.) Remove this end terminal lead wire, and insert it into the insert section (No.3) of the plug-in connector for the valve base assembly to be added. Next, insert the common wire (red) of this plug-in connector into the insert section (No.3) of the removed plug-in connector.

Note: When inserting the lead wire, confirm that the short bar of the plug-in connector's common wire insert section has been attached.

③ Install each of the wired plug-in connectors in step ② to the valve base, and mount the valve.

④ Remove the wiring block mounting screws and place the connector bracket in the position shown in Fig. 4, then connect the lead wire (white) of the added valve base after confirming the pin locations (For details, see the "Detailed diagram of wiring block internal connections" on p.36, 37).

⑤ Return the connector bracket to its original position, tighten the wiring block mounting screws in place, and then install the cover while exercising caution that the lead wires are not trapped by the cover.

【Caution】

- Always cut off the power and air supply before working. In addition, always confirm that air has been completely exhausted from the manifold.
- When removing lead wires from the plug-in connector, use a tool with a fine tip (such as a small screwdriver) to press lightly on the contact hook from a hole on the side of the plug-in connector, and pull out the lead wire. When re-inserting the lead wire to the connector, spread the contact hooks so that they face outward, and then insert the lead wire into the plug-in connector. At this time, pull the lead wire lightly to confirm that it is securely inserted.
- Always connect the end terminal lead wire (see Fig. 3).
- Care should be exercised to prevent the gasket from becoming caught or lost.
- Before supplying air to the manifold, always confirm that the bases are connected, the end block connecting screws on both sides are tightened, etc.
  Supplying air when either of the end blocks is not securing the DIN rail could result in air leaks or in separation of manifold bases.
- Caution should be exercised as the number of valve units that can be added is limited in the manifold, by the wiring specifications and wiring connection types, etc. For details, see the "Table for maximum number of valve units by wiring specification," on p.84.
- When there are a large number of valves simultaneously delivering air to the secondary side, or when there are a large number of valves overall, we recommend using 2 air supplies and exhausts (on each side).

Adding units to the piping block assembly should be performed in the same way as adding units to the valve base assembly. In addition, when the wiring block and piping block are mounted side-by-side, always mount the wiring block on the outside of the piping block, for structural reasons.

Valve tightening torque N·cm [in·lbf]

Series	torque
F18	49.0 [4.3]

Figure 2

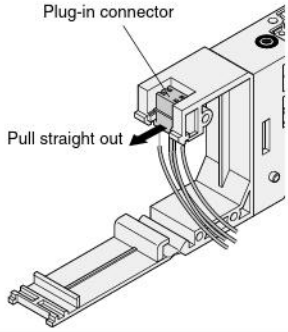

Figure 3

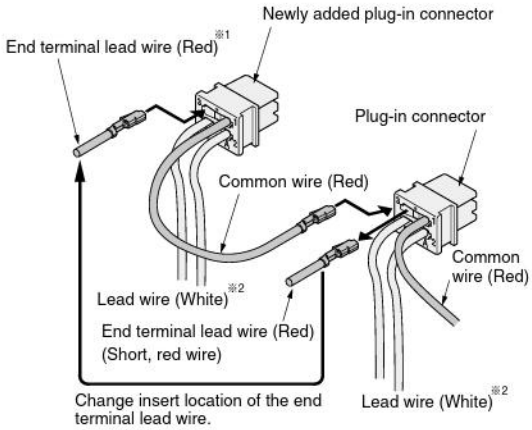

※ 1: Always insert end terminal lead wire.
※ 2: Shows when both A and B are used.

Figure 4

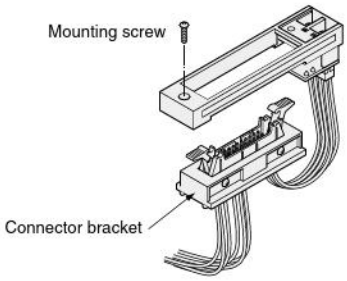

See "F18 Series Detailed Diagram of Wiring Block Internal Connections" on p.40.

F10 and F15 Series Disassembly Diagram of Easy Assembly Type Manifold Non-Plug-in Type

Figure 1

Disassembly example: For F10 series

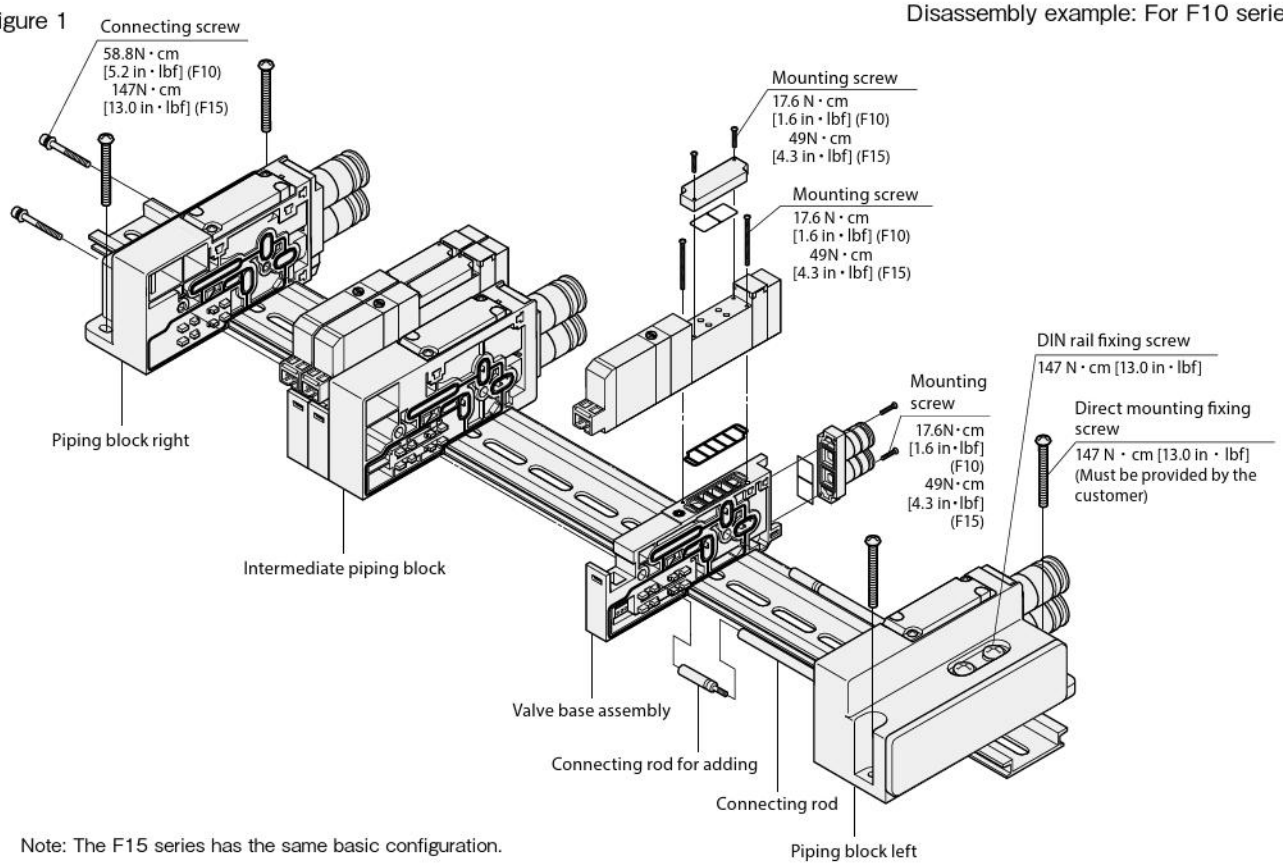

Note: The F15 series has the same basic configuration.

Manifold Unit Adding Procedure (F10 and F15 Series Easy Assembly Type)

■Adding a valve base unit (use the same procedure for adding an intermediate piping block)

<When using a DIN rail>

① Loosen the DIN rail fixing screws (4 locations) on both sides of the piping block in advance, to a degree which enables the manifold to slide on the DIN rail. (see Fig.1)

② Loosen the connecting screws (two locations) on the right side of the piping block. (see Fig.2)

③ Divide the manifold in the location where the valve base unit will be added, and remove it from the connecting rod.

④ Install the connecting rod included with the valve base assembly to add to the connecting rod of the manifold.

⑤ Install the valve base assembly to add in the required location through the connecting rod, and enclose the valve base assembly on both sides.

⑥ Tighten the connecting screws (two locations) on the right side of the piping block.
Tightening torque: F10 58.8 N・cm [5.2 in・lbf]　F15 147 N・cm [13.0 in・lbf]

⑦ Confirm that the hook of the DIN rail mounting bracket is securely caught, and tighten the DIN rail fixing screws (4 locations). (see Fig.4) Tightening torque: 147 N・cm [13.0 in・lbf]

Figure 2

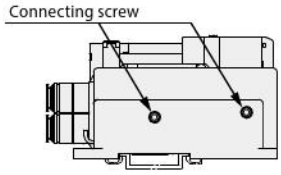

Note: Always follow the steps shown in Fig.3 when tightening the DIN rail fixing screws.

Figure 3

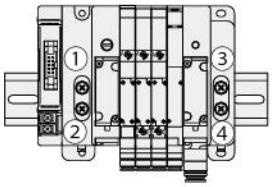

Tightening torque: 147 N・cm [13.0 in・lbf]

<For direct mounting>

① Loosen the connecting screws (2 locations) on the right side of the piping block. (see Fig.2)

② Divide the manifold in the location where the valve base unit will be added, and remove it from the connecting rod.

③ Install the connecting rod included with the valve base assembly to add to the connecting rod of the manifold.

④ Install the valve base assembly to add in the required location through the connecting rod, and enclose the valve base assembly on both sides.

⑤ Tighten the connecting screws (two locations) on the right side of the piping block.
Tightening torque: F10 58.8 N・cm [5.2 in・lbf]　F15 147 N・cm [13.0 in・lbf]

⑥ Tighten the fixing screws (provided by the customer).
Tightening torque: 74.5 N・cm [6.6 in・lbf] (for both the F10 and F15)

【Caution】

●Before supplying air to the manifold, always confirm that the tightening of the connecting screws. Insufficient tightening is dangerous because it may cause air leaks or accidents.

Figure 4

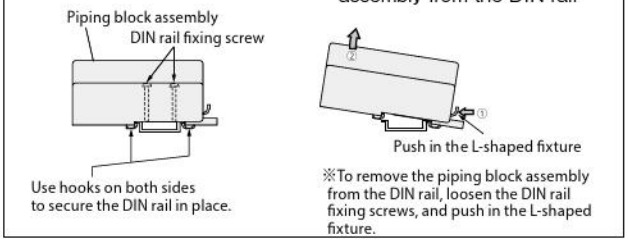

F10 and F15 Series Disassembly Diagram of Easy Assembly Type Manifold Plug-in Type

Figure 1

Disassembly example: For F10 series (using flat cable connector)

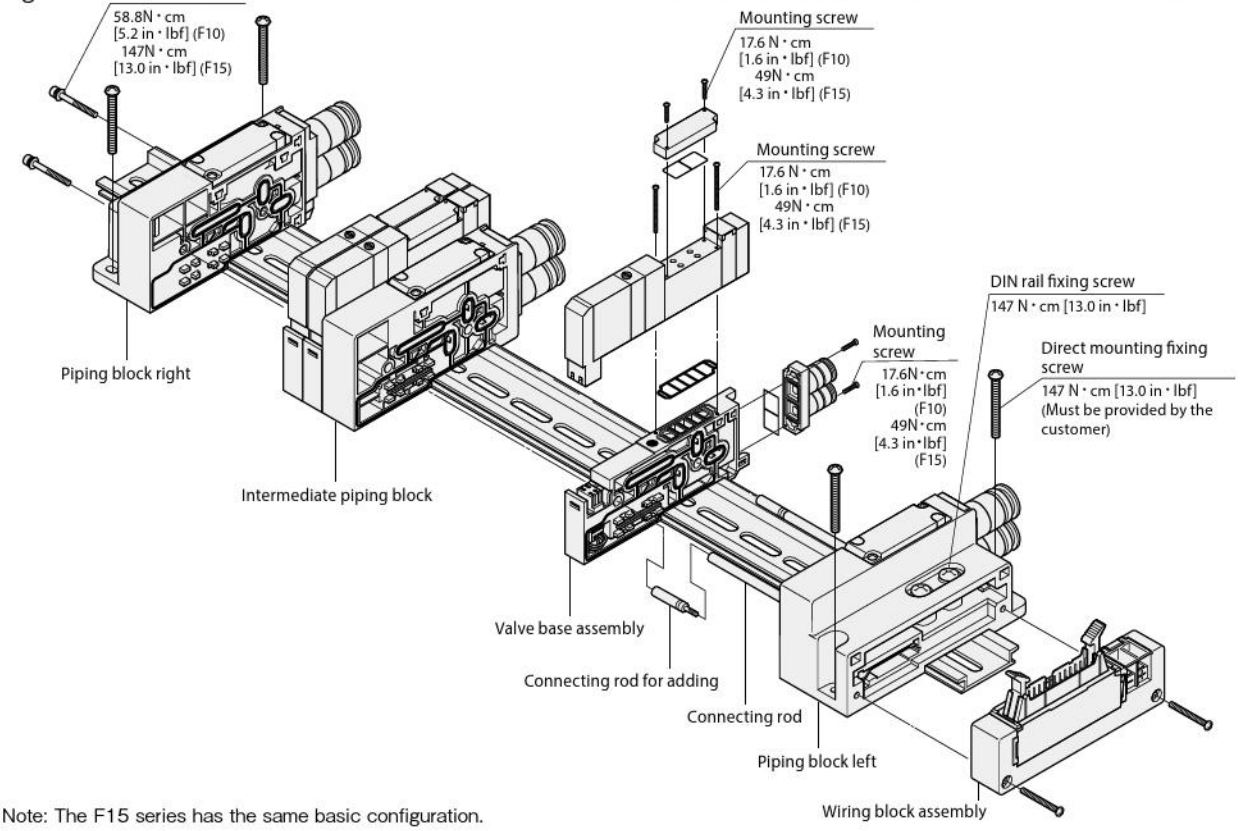

Note: The F15 series has the same basic configuration.

Manifold Unit Adding Procedure (F10 and F15 Series Easy Assembly Type)

■Adding a valve base unit (use the same procedure for adding an intermediate piping block)

<When using a DIN rail>

① Loosen the DIN rail fixing screws (4 locations) on both sides of the piping block in advance, to a degree which enables the manifold to slide on the DIN rail. (see Fig.1)
② Loosen the connecting screws (two locations) on the right side of the piping block. (see Fig.2)
③ Divide the manifold in the location where the valve base unit will be added, and remove it from the connecting rod.
④ Install the connecting rod included with the valve base assembly to add to the connecting rod of the manifold.
⑤ Install the valve base assembly to add in the required location through the connecting rod, and enclose the valve base assembly on both sides.
⑥ Tighten the connecting screws (two locations) on the right side of the piping block.
Tightening torque: F10 58.8 N・cm [5.2 in・lbf]　F15 147 N・cm [13.0 in・lbf]
⑦ Confirm that the hook of the DIN rail mounting bracket is securely caught, and tighten the DIN rail fixing screws (4 locations). (see Fig.4) Tightening torque: 147 N・cm [13.0 in・lbf]

Figure 2

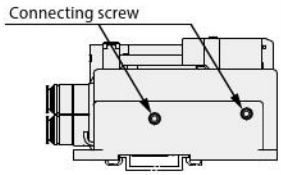

Figure 3

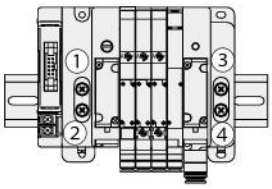

Tightening torque: 147 N・cm [13.0 in・lbf]

Note: Always follow the steps shown in Fig.3 when tightening the DIN rail fixing screws.

<For direct mounting>

① Loosen the connecting screws (2 locations) on the right side of the piping block. (see Fig.2)
② Divide the manifold in the location where the valve base unit will be added, and remove it from the connecting rod.
③ Install the connecting rod included with the valve base assembly to add to the connecting rod of the manifold.
④ Install the valve base assembly to add in the required location through the connecting rod, and enclose the valve base assembly on both sides.
⑤ Tighten the connecting screws (two locations) on the right side of the piping block.
Tightening torque: F10 58.8 N・cm [5.2 in・lbf]　F15 147 N・cm [13.0 in・lbf]
⑥ Always follow the steps shown in Fig.3 when tightening the fixing screws.

Figure 4

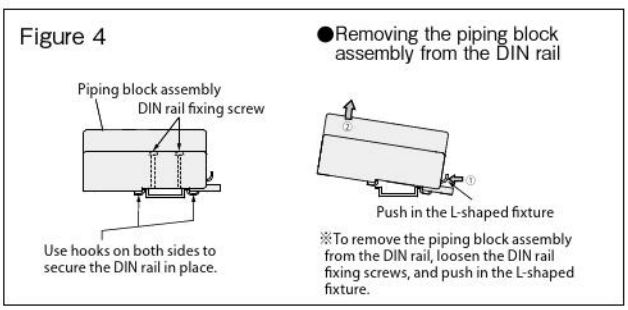

【Caution】

●Before supplying air to the manifold, always confirm that the tightening of the connecting screws. Insufficient tightening is dangerous because it may cause air leaks or accidents.

●When adding a valve base unit, be aware that the pin locations will change if it is not inserted in the final station.
The pin locations are the same for an intermediate piping block, regardless of the station.

Flat cable connector 10, 20, 26 pins
(The illustration is of the split manifold)

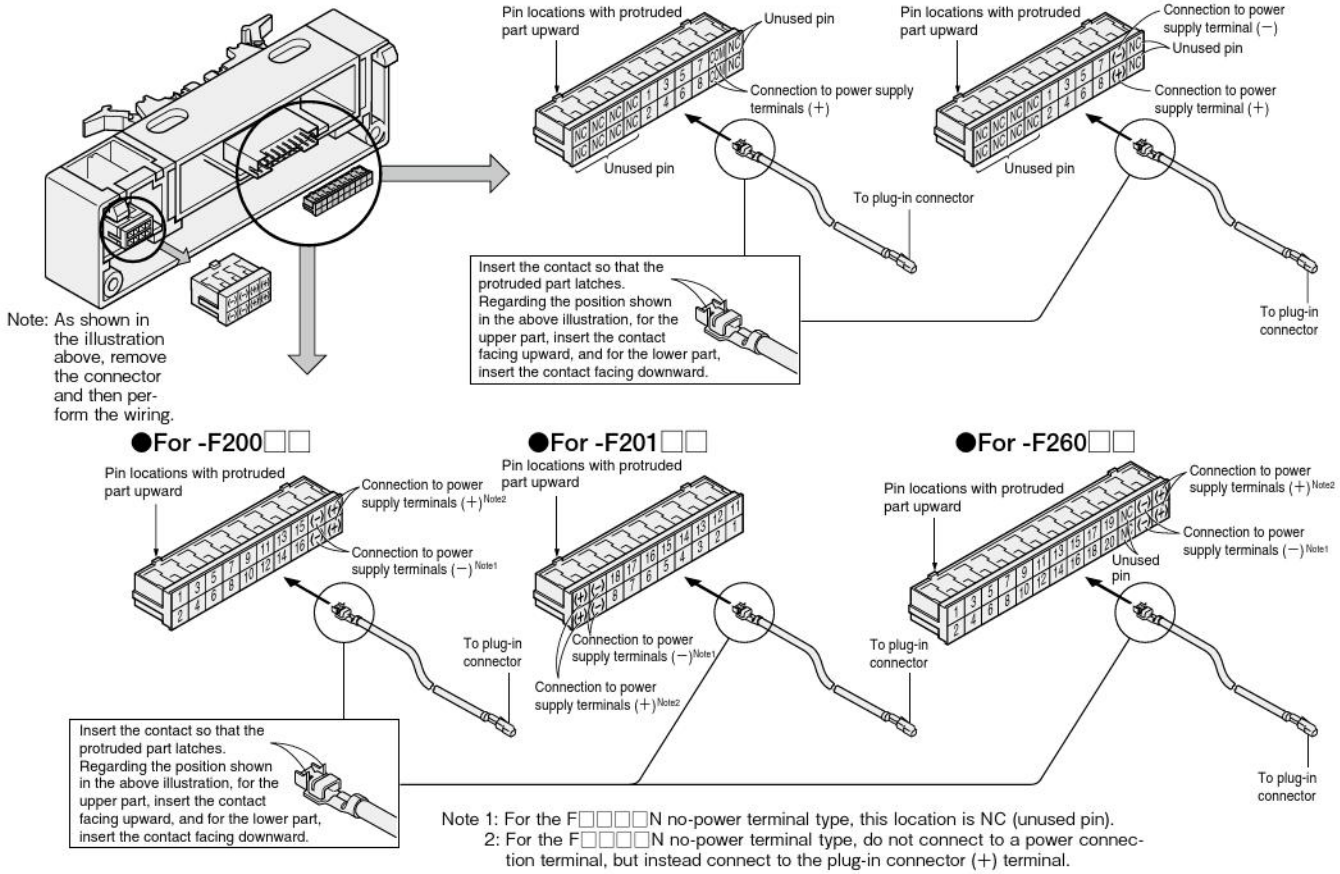

Note 1: For the F□□□□N no-power terminal type, this location is NC (unused pin).
2: For the F□□□□N no-power terminal type, do not connect to a power connection terminal, but instead connect to the plug-in connector (+) terminal.

D-sub connector
(The illustration is of the split manifold)

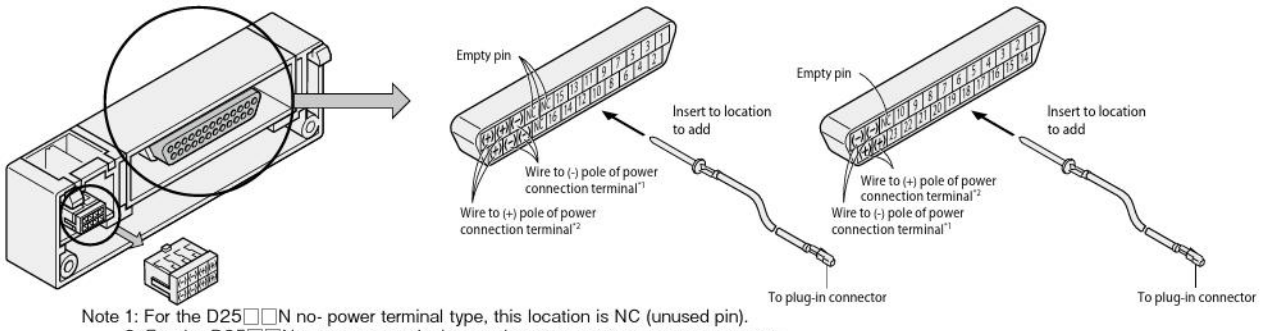

Note 1: For the D25□□N no- power terminal type, this location is NC (unused pin).
2: For the D25□□N no-power terminal type, do not connect to a power connection terminal, but instead connect to the plug-in connector (+) terminal.

Terminal block (The illustration is of the split manifold)

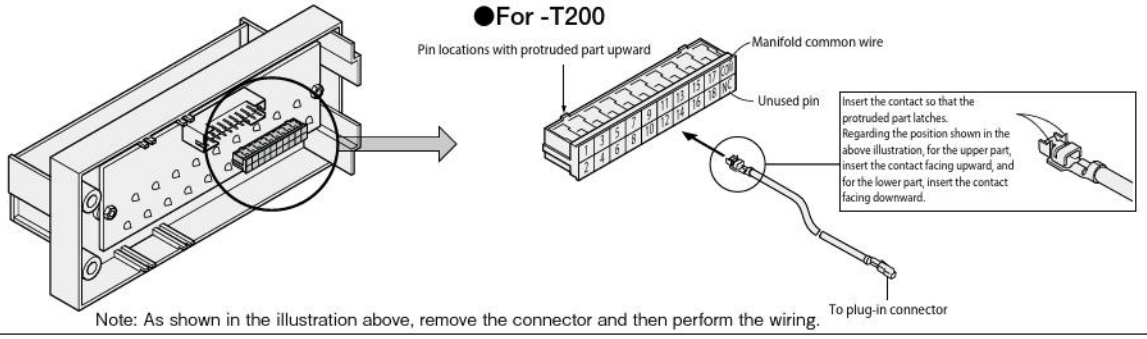

Note: As shown in the illustration above, remove the connector and then perform the wiring.

Remarks: The easy assembly type has internal wiring for each control point by default, so it is not necessary to add wiring.

Serial transmission block (The illustration is of the split manifold)

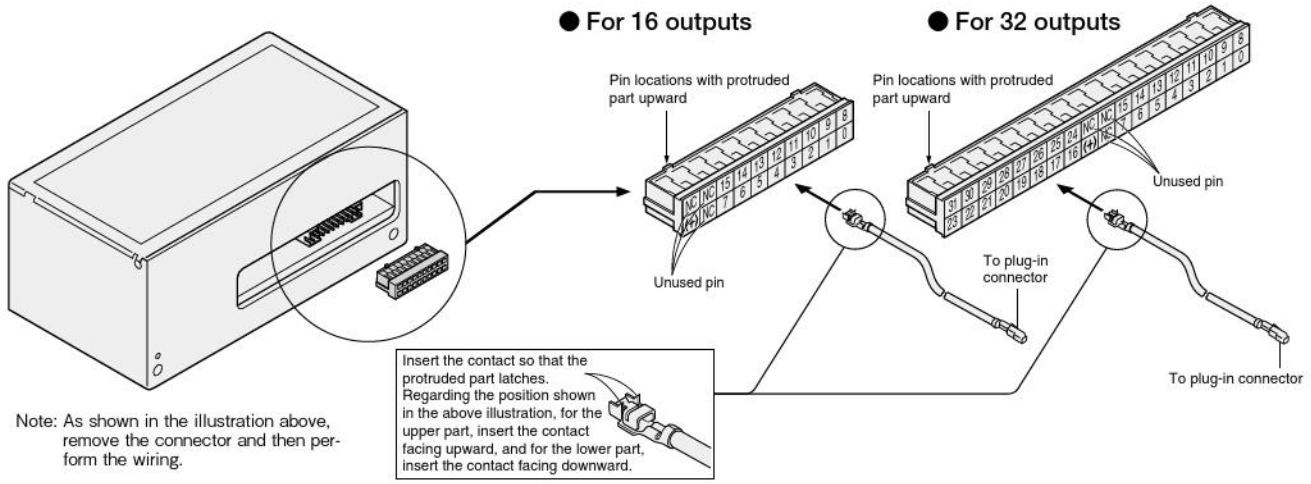

Note: As shown in the illustration above, remove the connector and then perform the wiring.

Remarks: The easy assembly type has internal wiring for each control point by default, so it is not necessary to add wiring.

F18 Series Detailed Diagram of Wiring Block Internal Connections

Flat cable connector 10, 20, 26 pins

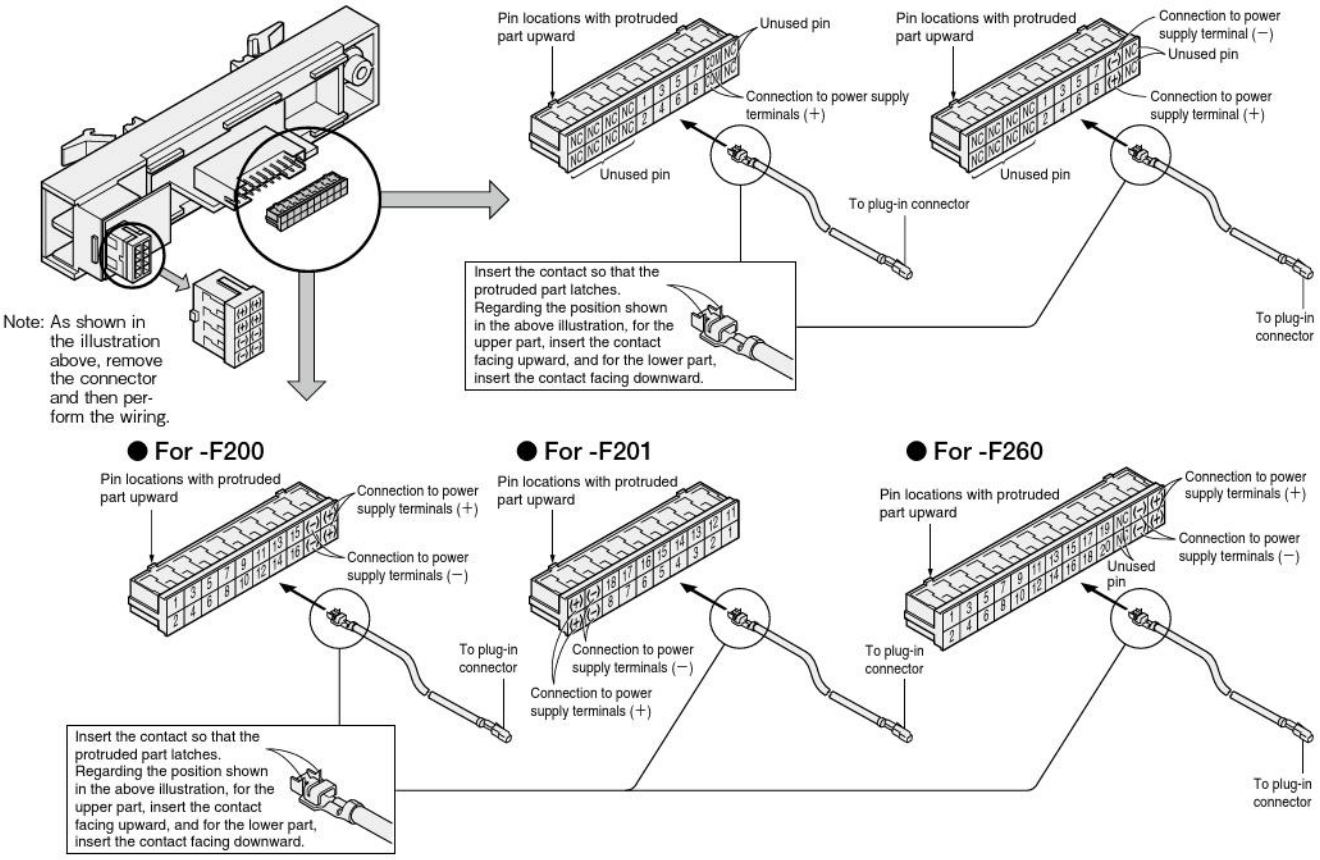

D-sub connector

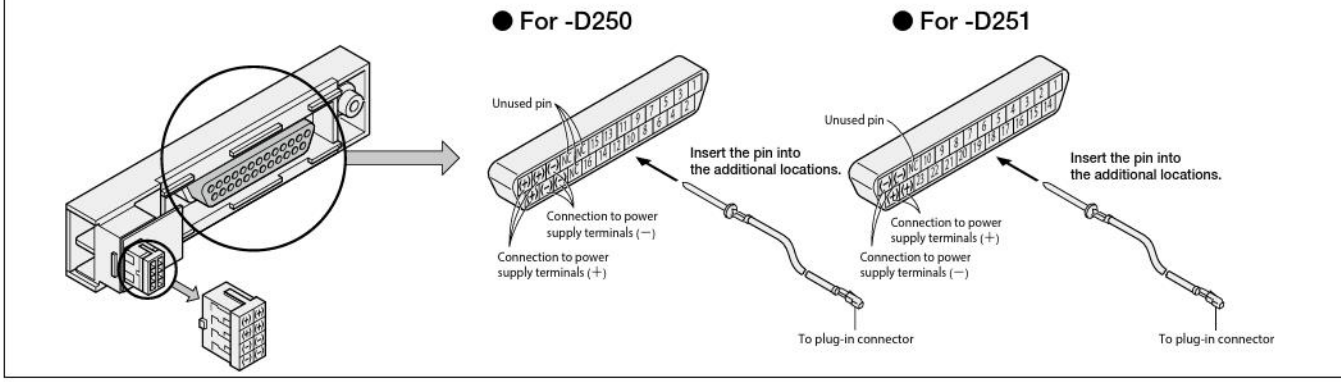

Terminal block

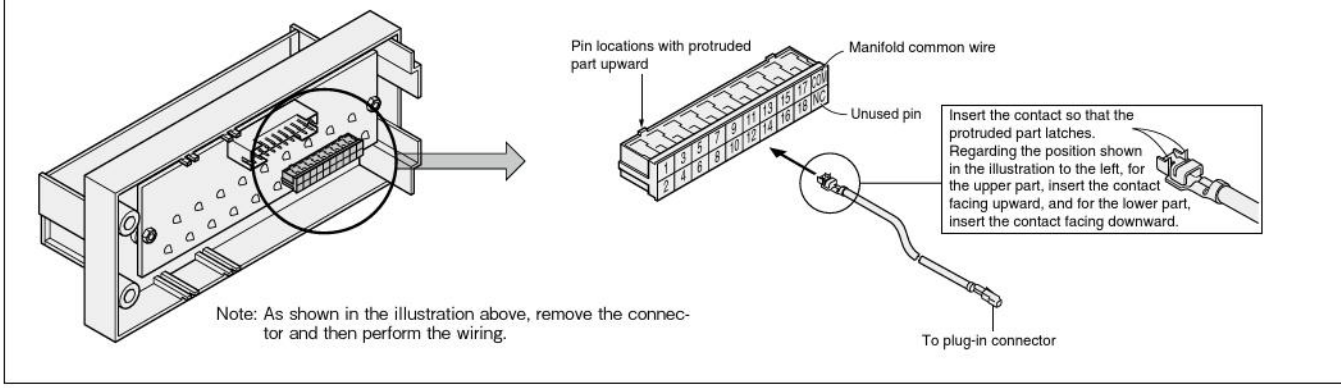

Product Configurations for the F Series Serial Transmission type

When ordering the serial transmission type, note that the product configurations vary between the F10 and F15 series, and the F18 series.

■ For F10 and F15 series

●Models compatible with integrated transmission block

- For CC-Link
- For DeviceNet
- For CompoNet
- For EtherCAT (the shape differs to that below)
- For EtherNet/IP (the shape differs to that below)

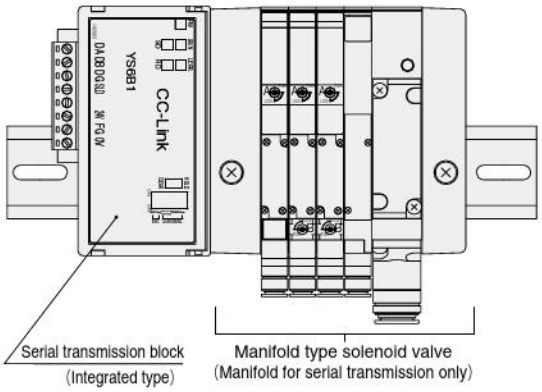

●Models for stand-alone transmission block

The manifold body and serial transmission block are connected with a flat cable.

- For Omron B7A Link Terminal

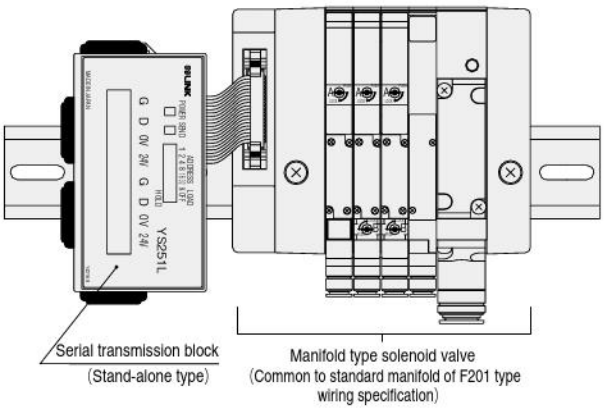

■ For F18 series

●Models compatible with integrated transmission block

- For Omron B7A Link Terminal
- For CC-Link
- For DeviceNet
- For EtherCAT (the shape differs to that below)
- For EtherNet/IP (the shape differs to that below)

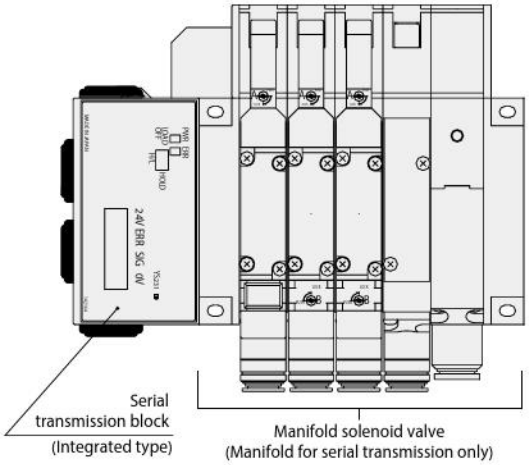

●Models for stand-alone transmission block

The manifold body and serial transmission block are connected with a flat cable.

- For CompoNet

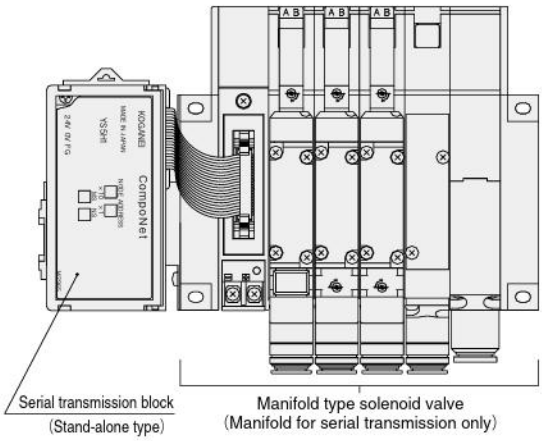

Specifications of Serial Transmission Type

General Specifications

Voltage	24VDC ±10%
Operating temperature range	5~50° C [41~122° F]
Vibration resistance	49.0 m/s^2 [5G]
Shock resistance	98.1 m/s^2 [10G]

● For details about specifications, see each user's manual (see below).

Serial Transmission Block, Terminal Block (LED) Part Names

● For OMRON B7A Link Terminal

Transmission block specification: -31 (standard type), **-32** (high-speed type)
(F10, F15 and F18 split manifold/Easy assembly type)

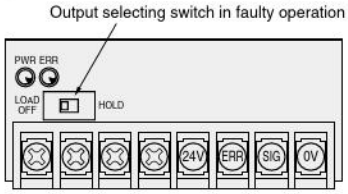

LED indicator

Indicator	Description
PWR	•Lights up when power is turned on
ERR	•Lights up during faulty transmission

Remarks

● **Connection method: 1 to 1**

(Transmission block spec.)	Standard type (-31)	High-speed type (-32)
Transmission delay time	Max. 31 ms	Max. 5 ms
Transmission distance	Max. 500 m [1640 ft]	Max. 100 m [328 ft]

※ For details of B7A Link Terminal, see the OMRON catalog, user's manual, etc.

● **Number of outputs per block**
Maximum of 16 solenoids

● **Error output specifications**
Output type: NPN open collector
Rated load voltage: 24VDC
Output current: Sink current MAX. 40 mA

● **Related materials:** User's manual, document **No. BK-HV038**

● For CC-Link

Transmission block specification: -B1 (16 outputs)
(F10 and F15 split manifold/Easy assembly type)

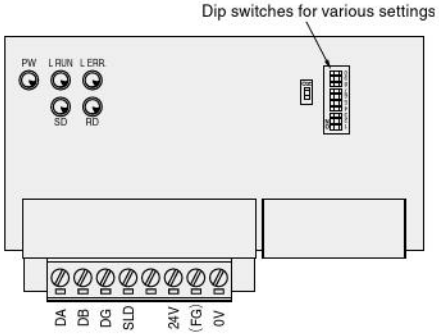

(F18 split manifold)

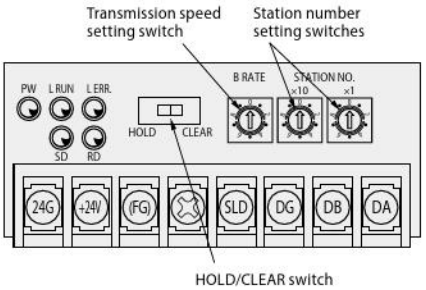

LED indicator

Indicator	Description
PW	•Lights up when power is turned on
L RUN	•Lights up when normal data is received from master station
SD	•Lights up during sending data
RD	•Lights up during receiving data
L ERR.	•Lights up during transmission errors, and shuts off when time is over Lights up due to station number setting error or transmission speed setting error

Remarks

※ Conforms to CC-Link.

● **Number of outputs per block**
16 solenoids (transmission block specification: **-B1**)

※ Since the block occupies 1 station, if remote I/O stations are entirely composed of the blocks, a maximum of 64 units can be connected to 1 master station.

● **Related materials:** User's manual, document **No.BK-HV041**

Serial Transmission Block, Terminal Block (LED) Part Names

● For CC-Link

Transmission block specification: -B3 (32 outputs)
(F10 and F15 split manifold/Easy assembly type)

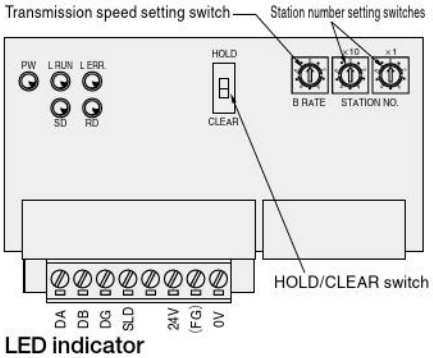

LED indicator

Indicator	Description
PW	•Lights up when power is turned on
L RUN	•Lights up when normal data is received from master station
SD	•Lights up during sending data
RD	•Lights up during receiving data
L ERR.	•Lights up during transmission errors, and shuts off when time is over Lights up due to station number setting error or transmission speed setting error

Remarks

※ Conforms to CC-Link.

● **Number of outputs per block**
32 solenoids (transmission block specification: **-B3**)

※ Since the block occupies 1 station, if remote I/O stations are entirely composed of the blocks, a maximum of 64 units can be connected to 1 master station.

● **Related materials:** User's manual, document **No.BK-HV041**

● For DeviceNet

Transmission block specification: -D1 (16 outputs), **-D3** (32 outputs)
(F10, F15 and F18 split manifold/Easy assembly type)

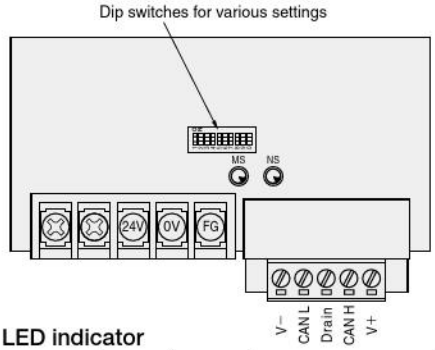

LED indicator

Indicator	State	Color	Description
MS	Lights up	Green	• Normal state
	Flashing		• No setting state
	Lights up	Red	• Serious breakdown
	Flashing		• Minor breakdown
	Shuts off	—	• No power supply
NS	Lights up	Green	• Communication connection completed
	Flashing		• No communication connection
	Lights up	Red	• Serious communication fault
	Flashing		• Minor communication fault
	Shuts off	—	• No power supply

Remarks

※Conforms to DeviceNet.

●**Number of outputs per block**
A maximum of 16 solenoids: **-D1**
A maximum of 32 solenoids: **-D3**

●**Related materials:** User's manual, document **BK-HV042**

●For CompoNet

Transmission block specification: -H1 (16 outputs)
(F10, F15 and F18 split manifold/Easy assembly type)

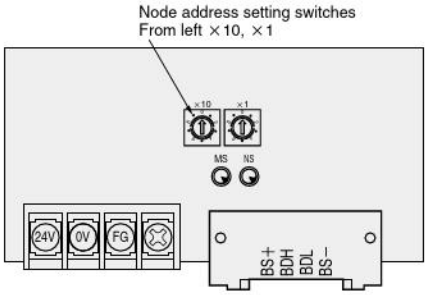

LED indicator

Indicator	State	Color	Description
MS	Lights up	Green	• Normal state
	Lights up	Red	• Serious breakdown
	Flashing	Red	• Minor breakdown
	Shuts off	—	• Power OFF/In preparation
NS	Lights up	Green	• Online/Access state
	Flashing	Green	• Online/No-access state
	Lights up	Red	• Serious communication fault
	Flashing	Red	• Minor communication fault
	Shuts off	—	• Power OFF/In preparation

Remarks

※Conforms to CompoNet.

●**Number of outputs per block**
16 solenoids (transmission block specification: **-H1**)

●**Related materials:** User's manual, document **No.BK-HV043**

※The communication connector is sold by Omron Corporation. Direct your inquiries to Omron.

●EtherCAT Compliant

Transmission block specifications: -K1 (16 outputs), **-K3** (32 outputs)
(F10, F15 and F18 split manifold/Easy assembly type)

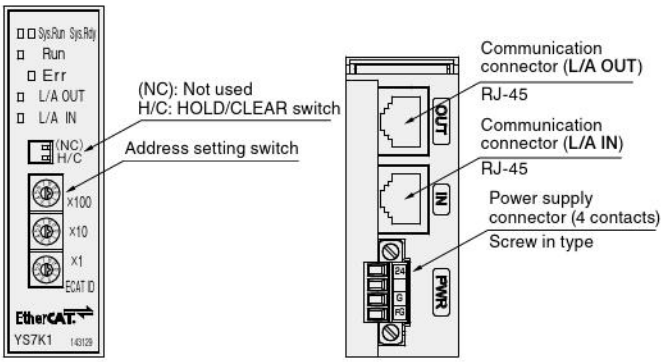

LED indicator

Indicator	State	Color	Description
Sys.Run/ Sys.Rdy	Lit/Not lit	Green/yellow	• Transmission block operation normal
	Flashing/flashing	Green/yellow	• Transmission block initialization
	Not lit/lit or flashing	Green/yellow	• Transmission block error
	Not lit/Not lit	Green/yellow	• Transmission block power OFF
Run	Off	Green	• INIT
	Flashing (blinking)	Green	• PRE-OPERATIONAL
	Flashing (single flash)	Green	• SAFE-OPERATIONAL
	Lighted	Green	• OPERATIONAL
Err	Off	Red	• No error
	Flashing (blinking)	Red	• Invalid setting
	Flashing (single flash)	Red	• Unrequested change in status
	Flashing (double flash)	Red	• Communication disconnect
L/A OUT L/A IN	Lighted	Green	• Normal communication
	Flashing	Green	• EtherCAT frame sending/receiving
	Off	Green	• Not connected

EtherCAT® is a registered trademark for patented technology licensed from Beckhoff Automation GmbH of Germany.

Remarks

※Comforms to EtherCAT.

●**Number of outputs per block**
A maximum of 16 solenoids: **-K1**
A maximum of 32 solenoids: **-K3**

●We recommend category 5 (100BASE-TX) or higher twisted paired cables (CAT 5e STP) for the communications cables.

●You can download the ESI (EtherCAT Slave Information) file from our web site.

●**Related materials:** User's manual, document **No.BK-HV044**

■For specifications and handling details, see the above-listed user's manuals (Document **No. BK-HV038 - BK-HV045**).

●EtherNet/IP Compliant

Transmission block specifications: -M1 (16 outputs), -M3 (32 outputs)
(F10, F15 and F18 split manifold/Easy assembly type)

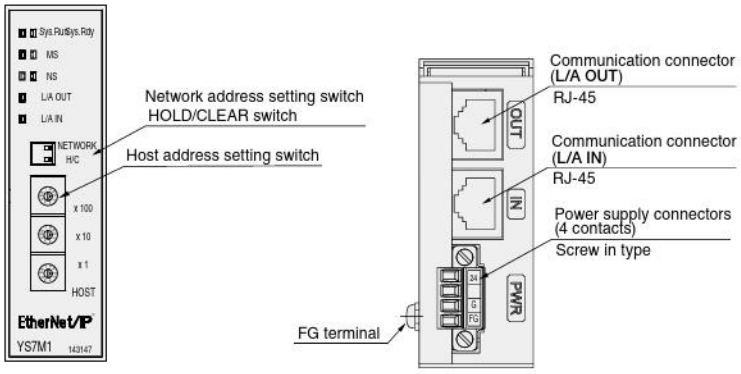

LED indicator

Indicator	LED state	Description
Sys.Run/Sys.Rdy	□□ Not lit/Not lit	Transmission block power off
	■□ Lit green/Not lit	Transmission block operation normal
MS	□ Not lit	Transmission block power off
	◪ Flashing green	Setting IP address
	■ Lit green	During normal operation
	◪ Flashing red	Recoverable error
	■ Lit red	Unrecoverable error
NS	□ Not lit	Transmission block power off
	◪ Flashing green	Normal communication being performed but connection not established
	■ Lit green	Normal communication being performed and connection established
	◪ Flashing red	Connection timeout
	■ Lit red	Duplicate IP address detected
L/A	□ Not lit	No connection
	■ Lit green	Normal communication

EtherNet/IPTM is a trademark of ODVA.

Remarks

※Complies with EtherNet/IP.

●**Number of outputs per block**
A maximum of 16 solenoids: **-M1**
A maximum of 32 solenoids: **-M3**

●We recommend category 5 (100BASE-TX) or higher twisted paired cables (CAT 5e STP) for the communications cables.

●You can download the EDS (Electronic Data Sheet) file from our web site.

●**Related materials:** User's manual, document **No. BK-HV045**.

■For specifications and handling details, see the above-listed user's manuals (Document **No. BK-HV038 - BK-HV045**).

PC Board Manifold Pin Locations by Wiring Specification (Top View)

Flat cable connector (20-pin)

● **-F200** (Maximum number of control pins: 16)

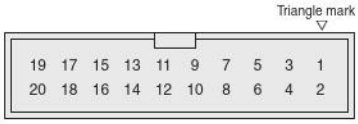

1 ~ 16 : Control pins
17, 18 : (−) pins (Short-circuited inside)
19, 20 : (+) pins (Short-circuited inside)

● **-F201** (Maximum number of control pins: 16)

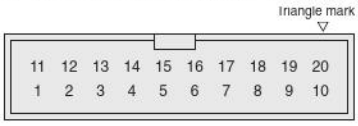

1 ~ 8: Control pins
11 ~ 18: Control pins
9, 19 : (−) pins (Short-circuited inside)
10, 20 : (+) pins (Short-circuited inside)
Caution : Connector pin numbers are assigned for the sake of convenience.
Use the ▽ mark as the reference.

● Various dedicated cable assemblies are available.
See p. 103, 104 for details.

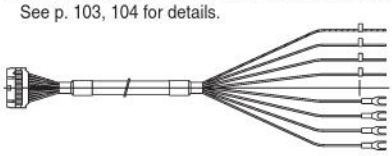

Remark: Socket and strain relief for flat cable are included at shipping.
※ For the relationship between the pin No. (terminal No.) and the corresponding solenoid, see p.46.

Detailed Diagram of Wiring System

● **Positive common**

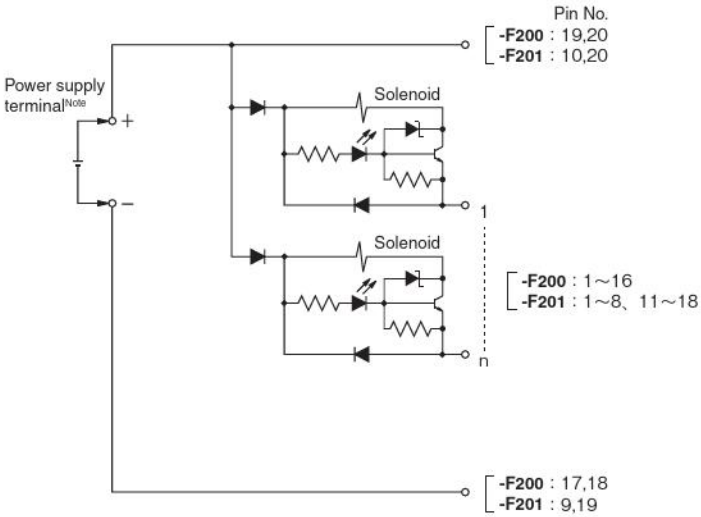

Note: For connecting a power line to the PC board manifold power terminal, see the "PC Board Manifold" precautions on p.23.

Remark: The internal circuit is of the standard type. For details of the low-current type, see p.23.

Pin No. and Corresponding Solenoid (For PC Board Manifold A Type and F Type)

The examples below show the relationship between the PC board manifold pin No. and the corresponding solenoid.
All the mounting examples show cases of the maximum number of control pins used.

Flat cable connector (20-pin)

● In the case of wiring specification **-F200** (Maximum number of control pins: 16)

Example 1

F10M16APJ-F200-S stn.1 ～ 15 F10T1-A1-PP DC24V
stn.16 F10BPC

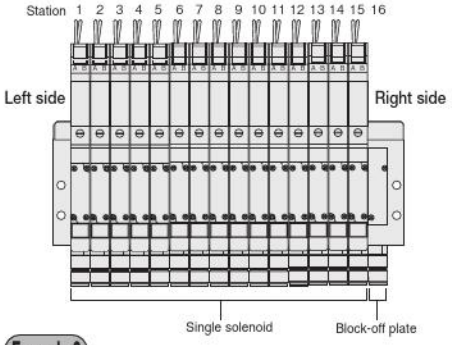

Number of units :	16 units
Wiring specification :	**-F200**
Wiring connection specification :	**-S** (single wiring)

(Top View) Triangle mark ▽

19	17	15	13	11	9	7	5	3	1
20	18	16	14	12	10	8	6	4	2

Pin No.	19	17	15	13	11	9	7	5	3	1
Valve No.	+	−	15A	13A	11A	9A	7A	5A	3A	1A
Pin No.	20	18	16	14	12	10	8	6	4	2
Valve No.	+	−	16A	14A	12A	10A	8A	6A	4A	2A

Example 2

F10M8APJ-F200-W stn.1 ～ 4 F10T1-A1-PP DC24V
stn.5 ～ 7 F10T2-A1-PP DC24V
stn.8 F10BPC

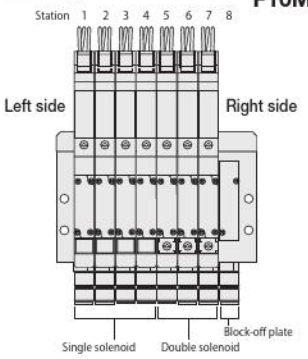

Number of units :	8 units
Wiring specification :	**-F200**
Wiring connection specification :	**-W** (double wiring)

(Top View) Triangle mark ▽

19	17	15	13	11	9	7	5	3	1
20	18	16	14	12	10	8	6	4	2

Pin No.	19	17	15	13	11	9	7	5	3	1
Valve No.	+	−	8A	7A	6A	5A	4A	3A	2A	1A
Pin No.	20	18	16	14	12	10	8	6	4	2
Valve No.	+	−	8B	7B	6B	5B	4B	3B	2B	1B

Flat cable connector (20-pin)

● In the case of wiring specification **-F201** (Maximum number of control pins: 16)

Example 1

F10M16APJ-F201-S stn.1 ～ 15 F10T1-A1-PP DC24V
stn.16 F10BPC

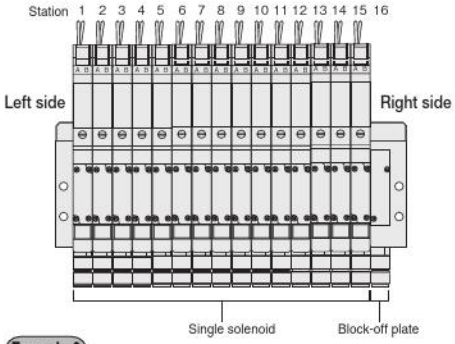

Number of units :	16 units
Wiring specification :	**-F201**
Wiring connection specification :	**-S** (single wiring)

(Top View) Triangle mark ▽

11	12	13	14	15	16	17	18	19	20
1	2	3	4	5	6	7	8	9	10

Pin No.	11	12	13	14	15	16	17	18	19	20
Valve No.	9A	10A	11A	12A	13A	14A	15A	16A	−	+
Pin No.	1	2	3	4	5	6	7	8	9	10
Valve No.	1A	2A	3A	4A	5A	6A	7A	8A	−	+

Example 2

F10M8APJ-F201-W stn.1～4 F10T1-A1-PP DC24V
stn.5～7 F10T2-A1-PP DC24V
stn.8 F10BPC

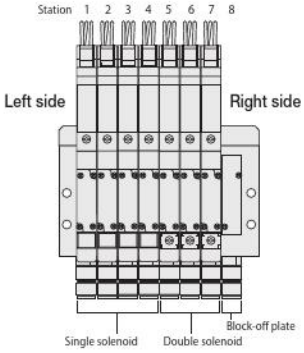

Number of units :	8 units
Wiring specification :	**-F201**
Wiring connection specification :	**-W** (double wiring)

(Top View) Triangle mark ▽

11	12	13	14	15	16	17	18	19	20
1	2	3	4	5	6	7	8	9	10

Pin No.	11	12	13	14	15	16	17	18	19	20
Valve No.	5A	5B	6A	6B	7A	7B	8A	8B	−	+
Pin No.	1	2	3	4	5	6	7	8	9	10
Valve No.	1A	1B	2A	2B	3A	3B	4A	4B	−	+

Caution: Connector pin numbers are assigned for the sake of convenience.
Use the ▽ mark as the reference.

Notes: 1. The valve No.1A, 1B, 2A, 2B… numerals show the stn. numbers in order, while the letters A and B show the A and B sides of the solenoid.
2. The stn. numbers are counted from the left, 1, 2…, with the solenoid on top and the valve in front.

Pin (Terminal) Locations by Wiring Specification (Top View) (For Monoblock Manifold A Type and F Type Wire-Saving Type, Split Manifold Plug-in Type, Easy Assembly Type Manifold Plug-in Type)

Flat cable connector (10-pin)

●-F100□□ (Maximum number of control pins: 8)

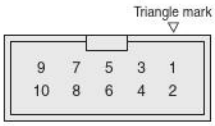

1~8 : Control pins
9, 10 : Common pins (short-circuited within the wiring block)

●-F101□□ (Maximum number of control pins: 8)

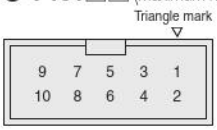

1~8 : Control pins
9 : (−) pin Note
10 : (+) pin

Note: For no-power terminal type, set to NC (unused pin).

● Various dedicated cable assemblies are available. See p. 103, 104 for details.

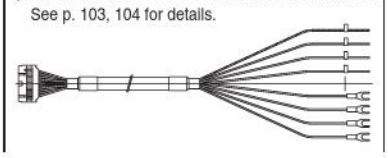

Flat cable connector (20-pin)

●-F200□□ (Maximum number of control pins: 16)

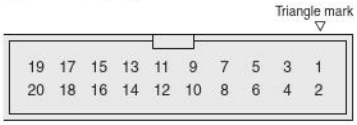

1~16 : Control pins
17, 18 : (−) pins (short-circuited within the wiring block) Note
19, 20 : (+) pins (short-circuited within the wiring block)
Note: For no-power terminal type, set to NC (unused pin).

●-F201□□ (Maximum number of control pins: 16)

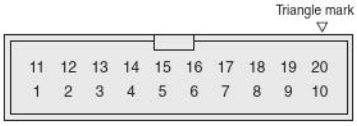

1~8 : Control pins
11~18 : Control pins
9, 19 : (−) pins (short-circuited within the wiring block) Note
10, 20 : (+) pins (short-circuited within the wiring block)

Note: For no-power terminal type, set to NC (unused pin).

Caution : Connector pin numbers are assigned for the sake of convenience.
Use the ▽ mark as the reference.

Flat cable connector (26-pin)

●-F260□□ (Maximum number of control pins: 20)

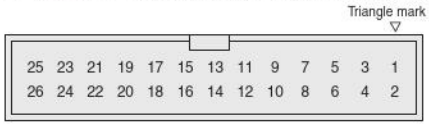

1~20 : Control pins
23, 24 : (−) pins (short-circuited within the wiring block) Note
25, 26 : (+) pins (short-circuited within the wiring block)
Note: For no-power terminal type, set to NC (unused pin).

D-sub connector (25-pin)

●-D250□□ (Maximum number of control pins: 16)

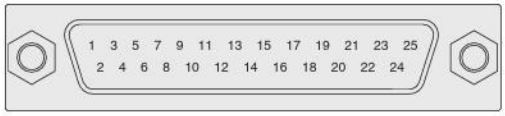

1~16 : Control pins
20, 21, 22 : (−) pins (short-circuited within the wiring block) Note
23, 24, 25 : (+) pins (short-circuited within the wiring block)
Note: For no-power terminal type, set to NC (unused pin).

Caution: The above pin numbers are assigned based on the solenoid valve wiring sequence for the sake of convenience.
They differ from the pin locations and pin numbers (marking) prescribed (JIS-X5101) for the Data Circuit-terminating Equipment (DCE).

●-D251□□ Pin locations based on JIS (Maximum number of control pins: 20)

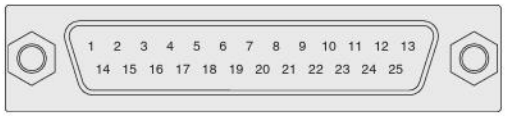

1~10, 14~23 : Control pins
12, 13 : (−) pins (short-circuited within the wiring block) Note
24, 25 : (+) pins (short-circuited within the wiring block)
Note: For no-power terminal type, set to NC (unused pin).

Terminal block type (19 terminals, M3 screws)

●-T200 (Maximum number of control pins: 18)

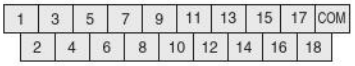

1~18 : Control terminals
COM : Common terminal

Caution: Apply the tightening torque for the terminal screw (M3) to 49.0 N·cm [4.3 in·lbf] or less.

※ For the relationship between the pin No.(terminal No.) and the corresponding solenoid, see p. 52-56.

F10 and F15 Series Detailed Diagram of Wiring System

Flat cable connector and D-sub connector (12VDC and 24VDC)

● Positive common

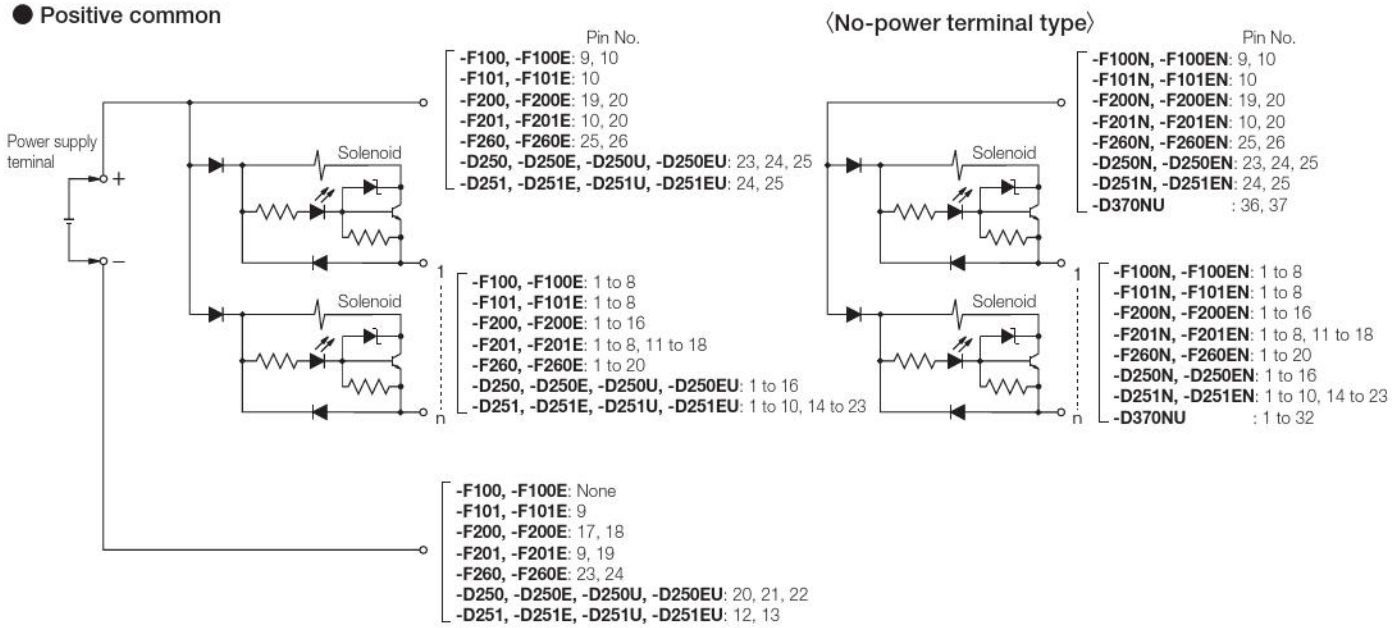

Remark:The internal circuit is of the standard type,For details of the low-current type, see p23.

● Negative common (-129W)

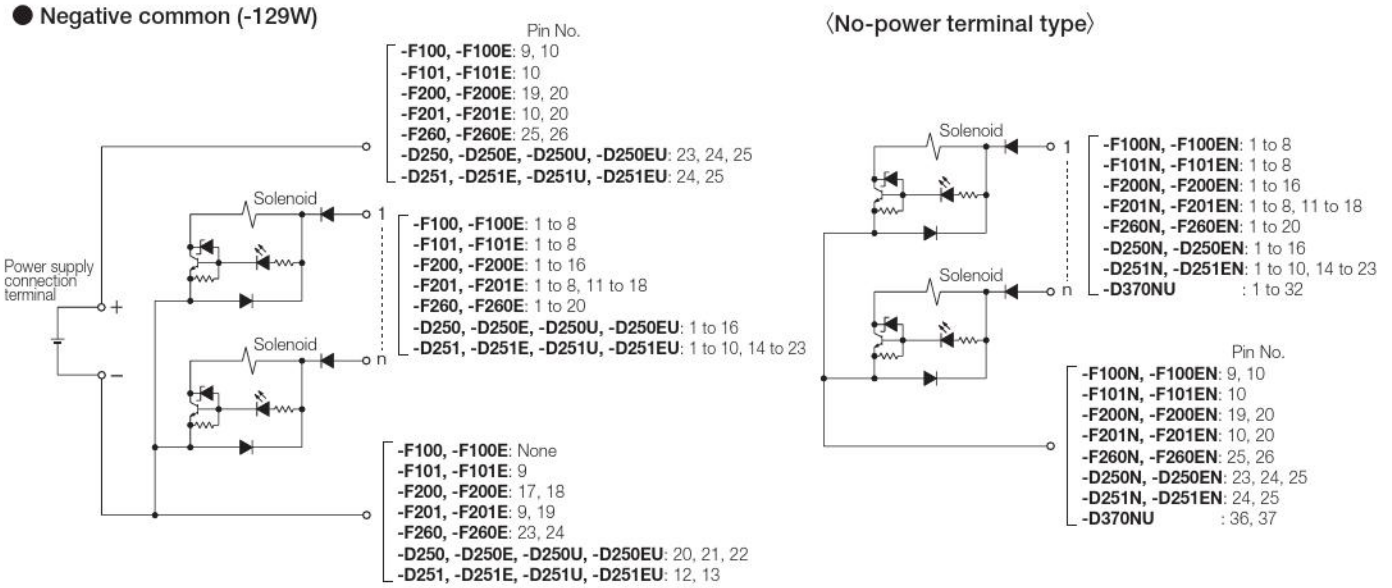

Remark:The internal circuit is of the standard type,For details of the low-current type, see p23.

D-sub connector (For 100VAC and 120VAC specification)

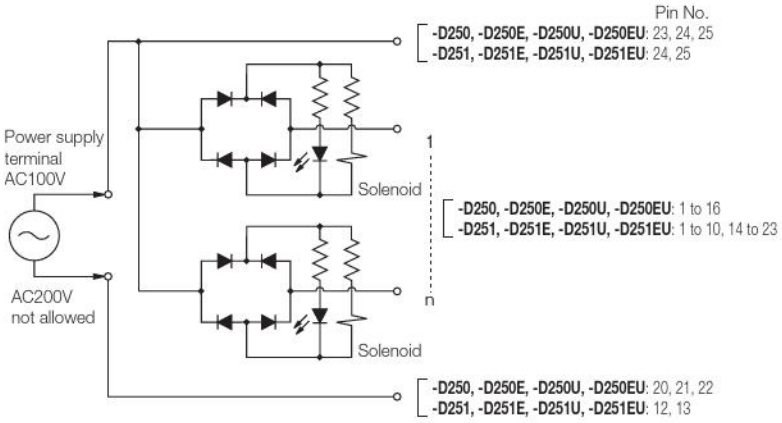

〈No-power terminal type〉

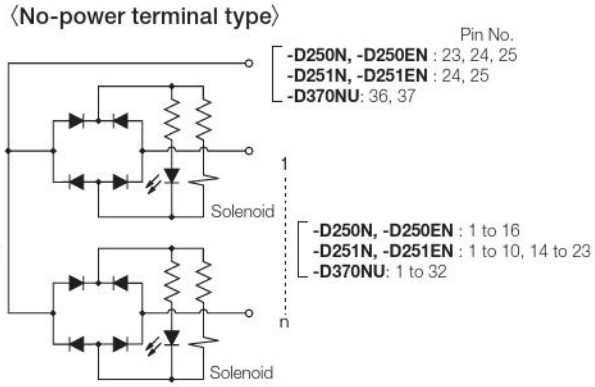

Terminal block (For 12VDC and 24VDC specifications)

● Positive common

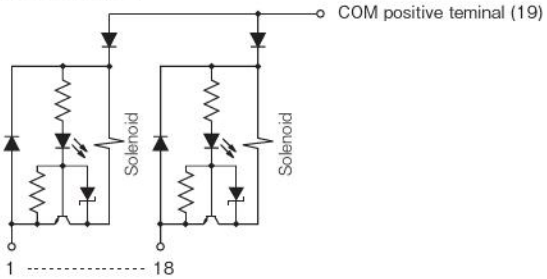

● Negative common (-129W)

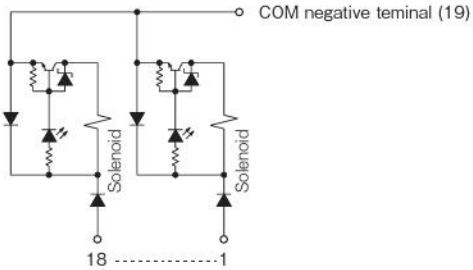

Terminal block (For 100VAC and 120VAC specification)

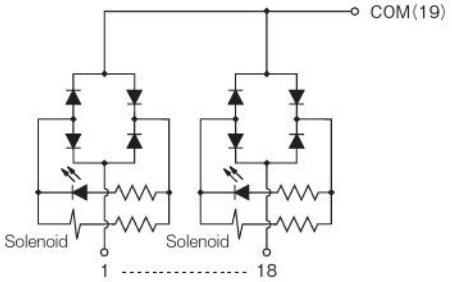

Remark: The internal circuit is of the standard type. For details of the low-current type, see p.23.

F18 Series Detailed Diagram of Wiring System

Flat cable connector and D-sub connector (12VDC and 24VDC)

● Positive common

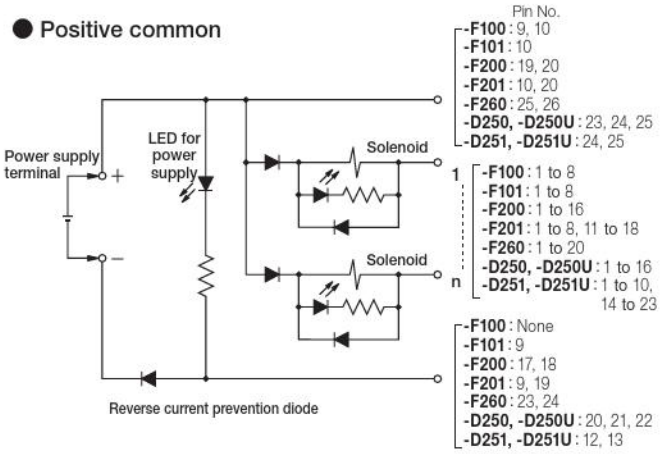

● Negative common (-129W)

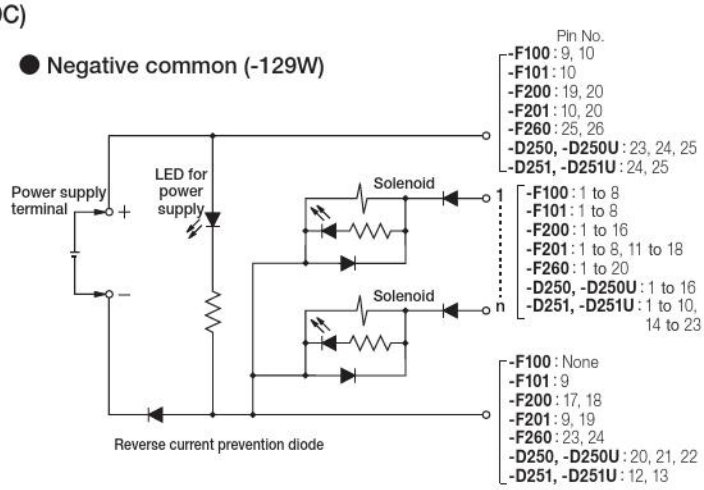

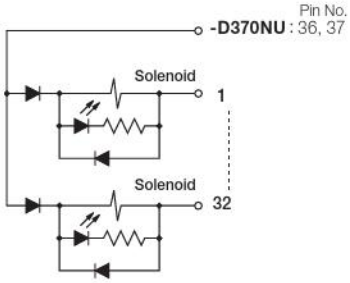

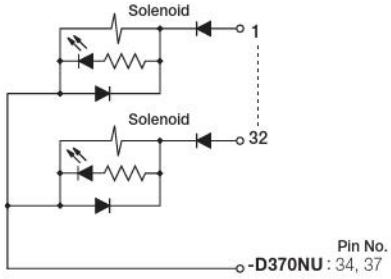

D-sub connector (For 100VAC and 120VAC specification)

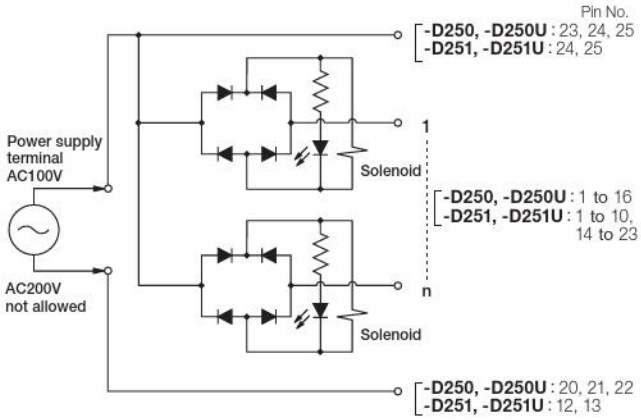

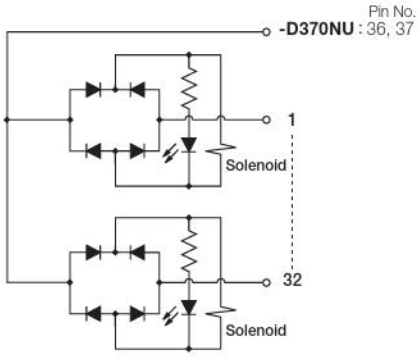

F18 Series Detailed Diagram of Wiring System

Terminal block (For 12VDC and 24VDC specifications)

● Positive common

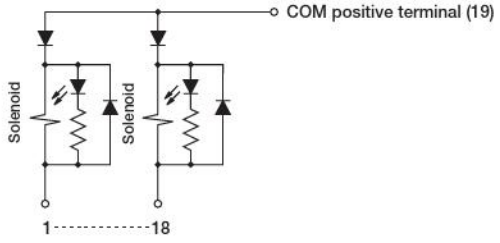

● Negative common (-129W)

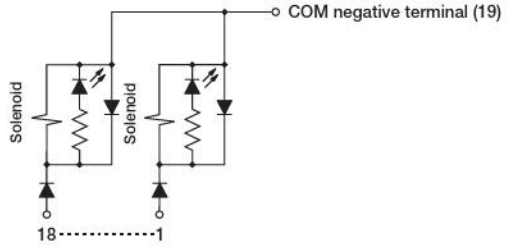

Terminal block (For 100VAC and 120VAC specification)

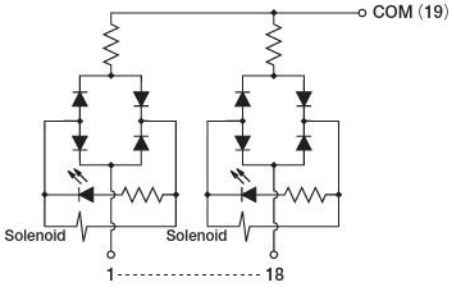

The examples below show the relationship between the split manifold pin No. (terminal No.) and the corresponding solenoid. This is the same for monoblock manifold A type wire-saving type, monoblock manifold F type wire-saving type and easy assembly type manifold.
All the mounting examples show cases of the maximum number of control pins used.

Flat cable connector (10-pin)

● In the case of wiring specification **-F100**□□ (Maximum number of control pins: 8)

Example 1 **F10M5PJ-JR-F100 DC24V stn.1～2 F10T1-A1 DC24V**
stn.3～4 F10T2-A1 DC24V
stn.5 F10BPP

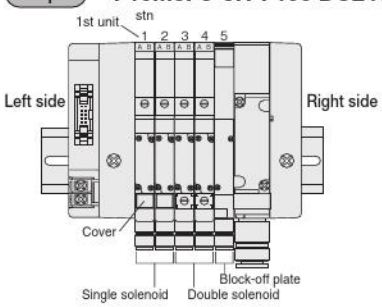

Number of units : 5 units
Wiring specification : **-F100**
Wiring connection specification : **Blank** (packed wiring)

(Top View) Triangle mark ▽

9	7	5	3	1
10	8	6	4	2

Pin No.	9	7	5	3	1
Valve No.	+	5A	4A	3A	1A
Pin No.	10	8	6	4	2
Valve No.	+	5B	4B	3B	2A

Example 2 **F10M4PJ-JR-F100-W DC24V stn.1～2 F10T1-A1 DC24V**
stn.3～4 F10T2-A1 DC24V

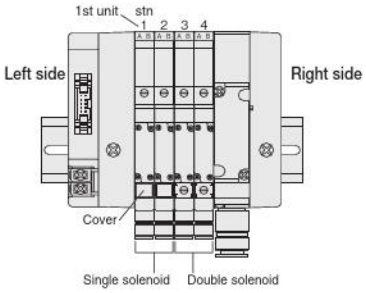

Number of units : 4 units
Wiring specification : **-F100**
Wiring connection specification : **-W** (double wiring)

(Top View) Triangle mark ▽

9	7	5	3	1
10	8	6	4	2

Pin No.	9	7	5	3	1
Valve No.	+	4A	3A	2A	1A
Pin No.	10	8	6	4	2
Valve No.	+	4B	3B	2B	1B

Flat cable connector (10-pin)

● In the case of wiring specification **-F101**□□ (Maximum number of control pins: 8)

Example 1 **F10M5PJ-JR-F101 DC24V stn.1～2 F10T1-A1 DC24V**
stn.3～4 F10T2-A1 DC24V
stn.5 F10BPP

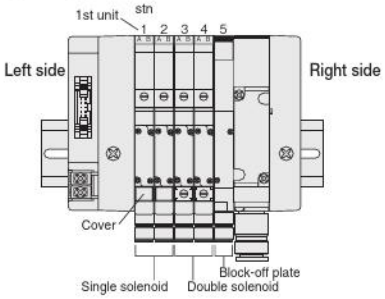

Number of units : 5 units
Wiring specification : **-F101**
Wiring connection specification : **Blank** (packed wiring)

(Top View) Triangle mark ▽

9	7	5	3	1
10	8	6	4	2

Pin No.	9	7	5	3	1
Valve No.	–	5A	4A	3A	1A
Pin No.	10	8	6	4	2
Valve No.	+	5B	4B	3B	2A

Note: For the no-power terminal type, set pin No.9 to NC (unused pin).

Example 2 **F10M4PJ-JR-F101-W DC24V stn.1～2 F10T1-A1 DC24V**
stn.3～4 F10T2-A1 DC24V

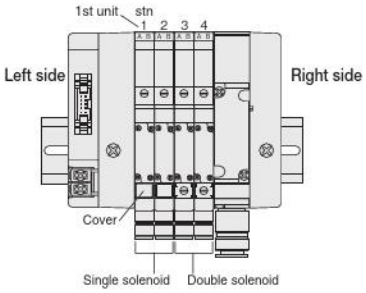

Number of units : 4 units
Wiring specification : **-F101**
Wiring connection specification : **-W** (double wiring)

(Top View) Triangle mark ▽

9	7	5	3	1
10	8	6	4	2

Pin No.	9	7	5	3	1
Valve No.	–	4A	3A	2A	1A
Pin No.	10	8	6	4	2
Valve No.	+	4B	3B	2B	1B

Note: For the no-power terminal type, set pin No.9 to NC (unused pin).

Notes:
1. The valve No.1A, 1B, 2A, 2B··· numerals show the stn. numbers in order, while the letters A and B show the A and B sides of the solenoid.
2. The stn. numbers are counted from the left, 1, 2···, with the solenoid on top and the valve in front.
3. When selecting wiring connection specification **-W**, all wiring becomes double wiring, regardless of valve specifications.
4. Caution should be exercised that the block-off plate is always dou ble wiring (allocated 2 control pins to 1 unit), regardless of the wiring connection specifications.
5. Connector pin numbers are assigned for the sake of convenience. Use the ▽ mark as the reference.

The examples below show the relationship between the split manifold pin No. (terminal No.) and the corresponding solenoid. This is the same for monoblock manifold A type wire-saving type, monoblock manifold F type wire-saving type and easy assembly type manifold.
All the mounting examples show cases of the maximum number of control pins used.

Flat cable connector (20-pin)

● In the case of wiring specification **-F200**□□ (Maximum number of control pins: 16)

Example 1

F10M10PJ-JR-F200 DC24V stn.1～4 F10T1-A1 DC24V
stn.5～9 F10T2-A1 DC24V
stn.10 F10BPP

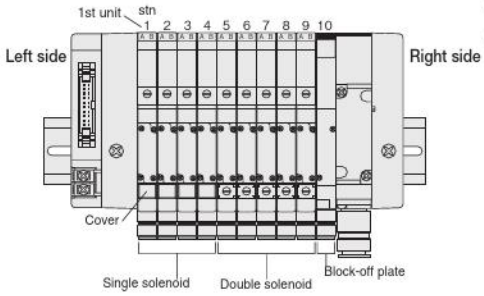

Number of units : 10 units
Wiring specification : **-F200**
Wiring connection specification : **Blank** (packed wiring)

(Top View) Triangle mark ▽

19	17	15	13	11	9	7	5	3	1
20	18	16	14	12	10	8	6	4	2

Pin No.	19	17	15	13	11	9	7	5	3	1
Valve No.	+	–	10A	9A	8A	7A	6A	5A	3A	1A
Pin No.	20	18	16	14	12	10	8	6	4	2
Valve No.	+	–	10B	9B	8B	7B	6B	5B	4A	2A

Note: For the no-power terminal type, set pins No.17 and 18 to NC (unused pins).

Example 2

F10M8PJ-JR-F200-W DC24V stn.1～4 F10T1-A1 DC24V
stn.5～7 F10T2-A1 DC24V
stn.8 F10BPP

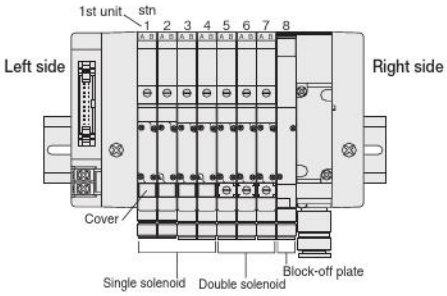

Number of units : 8 units
Wiring specification : **-F200**
Wiring connection specification : **-W** (double wiring)

(Top View) Triangle mark ▽

19	17	15	13	11	9	7	5	3	1
20	18	16	14	12	10	8	6	4	2

Pin No.	19	17	15	13	11	9	7	5	3	1
Valve No.	+	–	8A	7A	6A	5A	4A	3A	2A	1A
Pin No.	20	18	16	14	12	10	8	6	4	2
Valve No.	+	–	8B	7B	6B	5B	4B	3B	2B	1B

Note: For the no-power terminal type, set pins No.17 and 18 to NC (unused pins).

Flat cable connector (20-pin)

● In the case of wiring specification **-F201**□□ (Maximum number of control pins: 16)

Example 1

F10M10PJ-JR-F201 DC24V stn.1～4 F10T1-A1 DC24V
stn.5～9 F10T2-A1 DC24V
stn.10 F10BPP

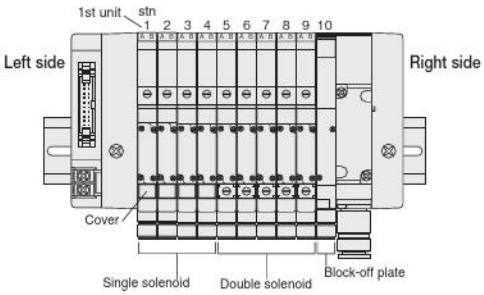

Number of units : 10 units
Wiring specification : **-F201**
Wiring connection specification : **Blank** (packed wiring)

(Top View) Triangle mark ▽

11	12	13	14	15	16	17	18	19	20
1	2	3	4	5	6	7	8	9	10

Pin No.	11	12	13	14	15	16	17	18	19	20
Valve No.	7A	7B	8A	8B	9A	9B	10A	10B	–	+
Pin No.	1	2	3	4	5	6	7	8	9	10
Valve No.	1A	2A	3A	4A	5A	5B	6A	6B	–	+

Note: For the no-power terminal type, set pins No.9 and 19 to NC (unused pins).

Example 2

F10M8PJ-JR-F201-W DC24V stn.1～4 F10T1-A1 DC24V
stn.5～7 F10T2-A1 DC24V
stn.8 F10BPP

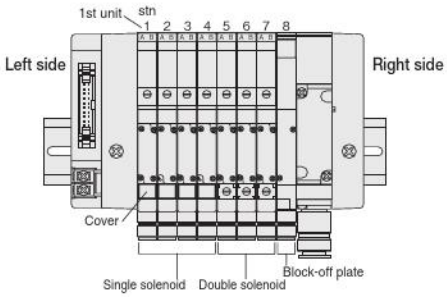

Number of units : 8 units
Wiring specification : **-F201**
Wiring connection specification : **-W** (double wiring)

(Top View) Triangle mark ▽

11	12	13	14	15	16	17	18	19	20
1	2	3	4	5	6	7	8	9	10

Pin No.	11	12	13	14	15	16	17	18	19	20
Valve No.	5A	5B	6A	6B	7A	7B	8A	8B	–	+
Pin No.	1	2	3	4	5	6	7	8	9	10
Valve No.	1A	1B	2A	2B	3A	3B	4A	4B	–	+

Note: For the no-power terminal type, set pins No.9 and 19 to NC (unused pins).

Caution: Connector pin numbers are assigned for the sake of convenience.
Use the ▽ mark as the reference.

Notes:
1. The valve No.1A, 1B, 2A, 2B··· numerals show the stn. numbers in order, while the letters A and B show the A and B sides of the solenoid.
2. The stn. numbers are counted from the left, 1, 2···, with the solenoid on top and the valve in front.
3. When selecting wiring connection specification **-W,** all wiring becomes double wiring, regardless of valve specifications.
4. Caution should be exercised that the block-off plate is always double wiring (allocated 2 control pins to 1 unit), regardless of the wiring connection specifications.
5. Connector pin numbers are assigned for the sake of convenience. Use the ▽ mark as the reference.

Pin No. (Terminal No.) and Corresponding Solenoid (For Monoblock Manifold A Type and F Type, Wire-Saving Type, Split Manifold Plug-in Type, Easy Assembly Type Manifold)

The examples below show the relationship between the split manifold pin No. (terminal No.) and the corresponding solenoid. This is the same for monoblock manifold A type wire-saving type, monoblock manifold F type wire-saving type and easy assembly type manifold.
All the mounting examples show cases of the maximum number of control pins used.

Flat cable connector (26-pin)

● In the case of wiring specification **-F260**□□ (Maximum number of control pins: 20)

Example 1 **F10M12PJ-JR-F260 DC24Vstn.1～4 F10T1-A1 DC24V**
stn.5～11 F10T2-A1 DC24V
stn.12 F10BPP

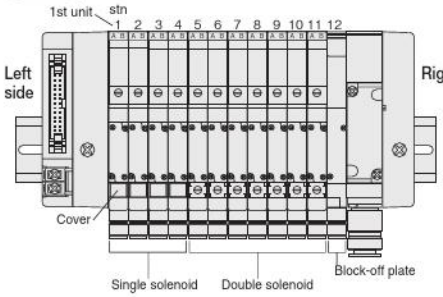

Number of units : 12 units
Wiring specification : **-F260**
Wiring connection specification : **Blank** (packed wiring)

(Top View) Triangle mark ▽

25	23	21	19	17	15	13	11	9	7	5	3	1
26	24	22	20	18	16	14	12	10	8	6	4	2

Pin No.	25	23	21	19	17	15	13	11	9	7	5	3	1
Valve No.	+	−		12A	11A	10A	9A	8A	7A	6A	5A	3A	1A
Pin No.	26	24	22	20	18	16	14	12	10	8	6	4	2
Valve No.	+	−		12B	11B	10B	9B	8B	7B	6B	5B	4A	2A

Note: For the no-power terminal type, set pins No.23 and 24 to NC (unused pins).

Example 2 **F10M10PJ-JR-F260-W DC24Vstn.1～6 F10T1-A1 DC24V**
stn.7～9 F10T2-A1 DC24V
stn.10 F10BPP

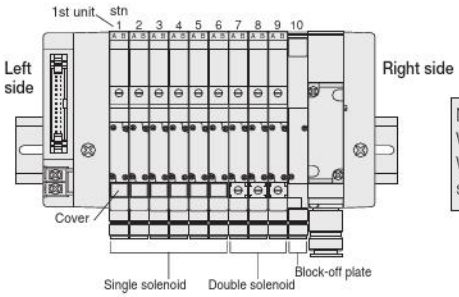

Number of units : 10 units
Wiring specification : **-F260**
Wiring connection specification : **-W** (double wiring)

(Top View) Triangle mark ▽

25	23	21	19	17	15	13	11	9	7	5	3	1
26	24	22	20	18	16	14	12	10	8	6	4	2

Pin No.	25	23	21	19	17	15	13	11	9	7	5	3	1
Valve No.	+	−		10A	9A	8A	7A	6A	5A	4A	3A	2A	1A
Pin No.	26	24	22	20	18	16	14	12	10	8	6	4	2
Valve No.	+	−		10B	9B	8B	7B	6B	5B	4B	3B	2B	1B

Note: For the no-power terminal type, set pins No.23 and 24 to NC (unused pins).

Notes:
1. The valve No.1A, 1B, 2A, 2B··· numerals show the stn. numbers in order, while the letters A and B show the A and B sides of the solenoid.
2. The stn. numbers are counted from the left, 1, 2···, with the solenoid on top and the valve in front.
3. When selecting wiring connection specification **-W**, all wiring becomes double wiring, regardless of valve specifications.
4. Caution should be exercised that the block-off plate is always double wiring (allocated 2 control pins to 1 unit), regardless of the wiring connection specifications.
5. Connector pin numbers are assigned for the sake of convenience. Use the ▽ mark as the reference.

The examples below show the relationship between the split manifold pin No. (terminal No.) and the corresponding solenoid. This is the same for monoblock manifold A type wire-saving type, monoblock manifold F type wire-saving type and easy assembly type manifold.
All the mounting examples show cases of the maximum number of control pins used.

D-sub connector (25-pin)

● In the case of wiring specification **-D250**□□
(Maximum number of control pins: 16)

Caution: The connector pin numbers are assigned based on the solenoid valve wiring sequence for the sake of convenience. They differ from the pin locations and pin numbers (marking) prescribed (JIS-X5101) for the Data Circuit-terminating Equipment (DCE).

Example 1 **F10M10PJ-JR-D250 DC24V stn.1～4 F10T1-A1 DC24V stn.5～9 F10T2-A1 DC24V stn.10 F10BPP**

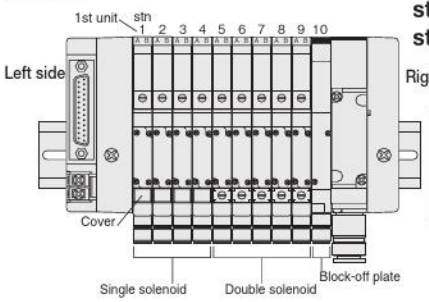

Number of units : 10 units
Wiring specification : **-D250**
Wiring connection specification : **Blank** (packed wiring)

(Top View)

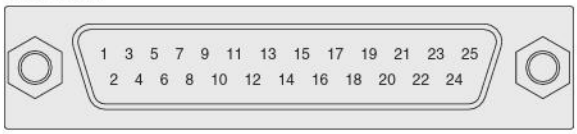

Pin No.	1	3	5	7	9	11	13	15	17	19	21	23	25
Valve No.	1A	3A	5A	6A	7A	8A	9A	10A			−	+	+

Pin No.	2	4	6	8	10	12	14	16	18	20	22	24
Valve No.	2A	4A	5B	6B	7B	8B	9B	10B		−	−	+

Note: For the no-power terminal type, set pins No.20, 21, and 22 to NC (unused pins).

Example 2 **F10M8PJ-JR-D250-W DC24V stn.1～4 F10T1-A1 DC24V stn.5～7 F10T2-A1 DC24V stn.8 F10BPP**

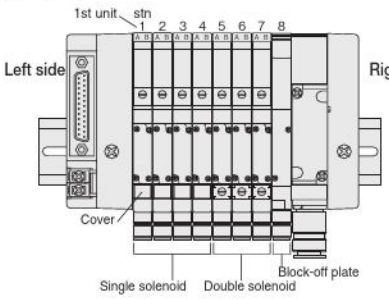

Number of units : 8 units
Wiring specification : **-D250**
Wiring connection specification : **-W** (double wiring)

(Top View)

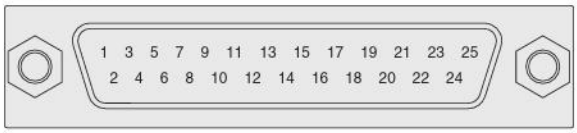

Pin No.	1	3	5	7	9	11	13	15	17	19	21	23	25
Valve No.	1A	2A	3A	4A	5A	6A	7A	8A			−	+	+

Pin No.	2	4	6	8	10	12	14	16	18	20	22	24
Valve No.	1B	2B	3B	4B	5B	6B	7B	8B		−	−	+

Note: For the no-power terminal type, set pins No.20, 21, and 22 to NC (unused pins).

D-sub connector (25-pin)

● In the case of wiring specification **-D251**□□
Pin locations based on JIS (Maximum number of control pins: 20)

Example 1 **F10M12PJ-JR-D251 DC24V stn.1～4 F10T1-A1 DC24V stn.5～11 F10T2-A1 DC24V stn.12 F10BPP**

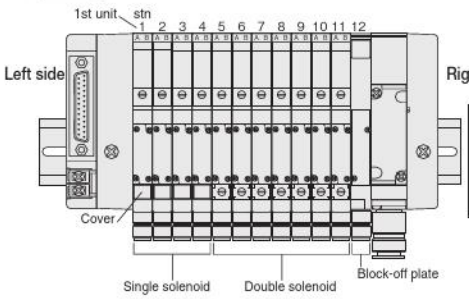

Number of units : 12 units
Wiring specification : **-D251**
Wiring connection specification : **Blank** (packed wiring)

(Top View)

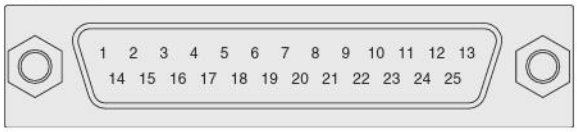

Pin No.	1	2	3	4	5	6	7	8	9	10	11	12	13
Valve No.	1A	2A	3A	4A	5A	5B	6A	6B	7A	7B		−	−

Pin No.	14	15	16	17	18	19	20	21	22	23	24	25
Valve No.	8A	8B	9A	9B	10A	10B	11A	11B	12A	12B	+	+

Note: For the no-power terminal type, set pins No.12 and 13 to NC (unused pins).

Example 2 **F10M10PJ-JR-D251-W DC24V stn.1～6 F10T1-A1 DC24V stn.7～9 F10T2-A1 DC24V stn.10 F10BPP**

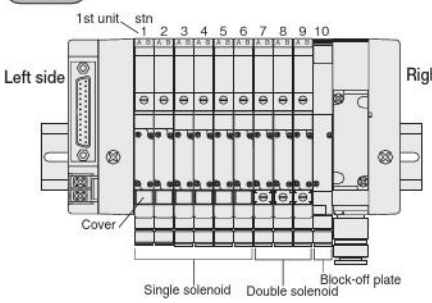

Number of units : 10 units
Wiring specification : **-D251**
Wiring connection specification : **-W** (double wiring)

(Top View)

Pin No.	1	2	3	4	5	6	7	8	9	10	11	12	13
Valve No.	1A	1B	2A	2B	3A	3B	4A	4B	5A	5B		−	−

Pin No.	14	15	16	17	18	19	20	21	22	23	24	25
Valve No.	6A	6B	7A	7B	8A	8B	9A	9B	10A	10B	+	+

Note: For the no-power terminal type, set pins No.12 and 13 to NC (unused pins).

Notes:
1. The valve No.1A, 1B, 2A, 2B··· numerals show the stn. numbers in order, while the letters A and B show the A and B sides of the solenoid.
2. The stn. numbers are counted from the left, 1, 2···, with the solenoid on top and the valve in front.
3. When selecting wiring connection specification **-W**, all wiring becomes double wiring, regardless of valve specifications.
4. Caution should be exercised that the block-off plate is always double wiring (allocated 2 control pins to 1 unit), regardless of the wiring connection specifications.

Pin No. (Terminal No.) and Corresponding Solenoid (For Split Manifold, Easy Assembly Type Manifold Plug-in Type)

The examples below show the relationship between the split manifold terminal No., the easy assembly type manifold terminal No. and the corresponding solenoid.
All the mounting examples show cases of the maximum number of control pins used.

Terminal block type (19 terminals, M3 screws)

● In the case of wiring specification **-T200** (Maximum number of control pins: 18)

Example 1

F10M12PJ-JR-T200 DC24V stn.1～6 F10T1-A1 DC24V
stn.7～11 F10T2-A1 DC24V
stn.12 F10BPP

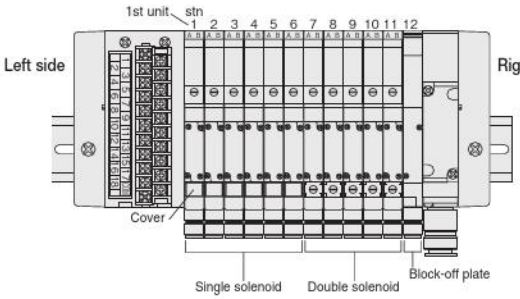

Number of units : 12 units
Wiring specification : **-T200**
Wiring connection specification : **Blank** (packed wiring)

(Top View)

1	3	5	7	9	11	13	15	17	COM
2	4	6	8	10	12	14	16	18	

Terminal No.	1	3	5	7	9	11	13	15	17	COM
Valve No.	1A	3A	5A	7A	8A	9A	10A	11A	12A	+

Terminal No.	2	4	6	8	10	12	14	16	18
Valve No.	2A	4A	6A	7B	8B	9B	10B	11B	12B

Example 2

F10M9PJ-JR-T200-W DC24V stn.1～6 F10T1-A1 DC24V
stn.7～8 F10T2-A1 DC24V
stn.9 F10BPP

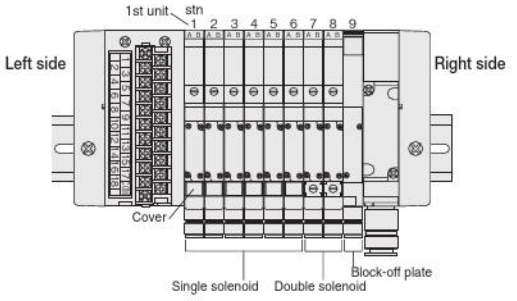

Number of units : 9 units
Wiring specification : **-T200**
Wiring connection specification : **-W** (double wiring)

(Top View)

1	3	5	7	9	11	13	15	17	COM
2	4	6	8	10	12	14	16	18	

Terminal No.	1	3	5	7	9	11	13	15	17	COM
Valve No.	1A	2A	3A	4A	5A	6A	7A	8A	9A	+

Terminal No.	2	4	6	8	10	12	14	16	18
Valve No.	1B	2B	3B	4B	5B	6B	7B	8B	9B

Notes:
1. The valve No.1A, 1B, 2A, 2B··· numerals show the stn. numbers in order, while the letters A and B show the A and B sides of the solenoid.
2. The stn. numbers are counted from the left, 1, 2···, with the solenoid on top and the valve in front.
3. When selecting wiring connection specification **-W**, all wiring becomes double wiring, regardless of valve specifications.
4. Caution should be exercised that the block-off plate is always double wiring (allocated 2 control terminals to 1 unit), regardless of the wiring connection specifications.

A dedicated cable assembly is provided for each wiring specification.

■ Order codes

FMA - □ - □ - □

- Cable length: 0.5 - 20 m [1.6-65.6 ft.] (enter at 0.5 m pitch)
  ※Cable used UL STYLE NO.20266 150V 80℃ [176°F] AWG28 (7/0.127 [strands/mm])
- Terminal processing
  Blank: Loose wire [with dedicated label/No.]
  Y: Y terminal (M3.5) [with marker tube/No.]
- Types of dedicated cables
  100W : -F100□□dedicated cable assembly
  101W : -F101□□dedicated cable assembly
  200W : -F200□□dedicated cable assembly
  201W : -F201□□dedicated cable assembly
  260W : -F260□□dedicated cable assembly
  250W : -D250□□dedicated cable assembly
  251W : -D251□□dedicated cable assembly

Note: Perform wiring operations correctly, while checking each pin location, connector No., label No., and marker tube No., etc.

●-F100□□dedicated cable assembly

FMA-100W- □ - □

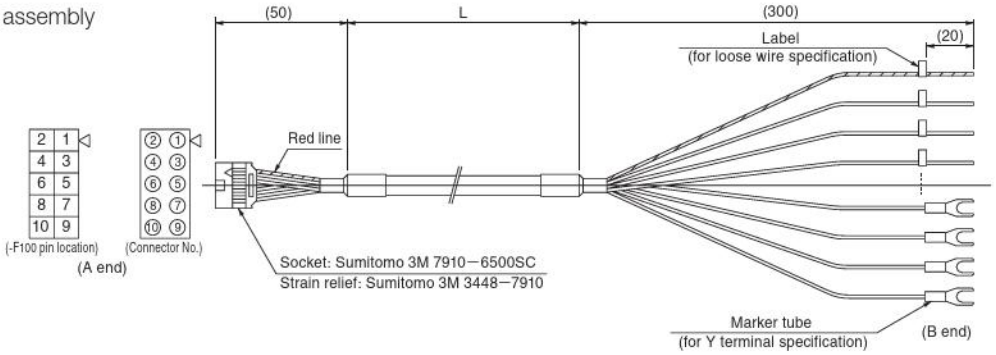

A end	-F100 pin location	1	2	3	4	5	6	7	8	9	10
	Connector No.	①	②	③	④	⑤	⑥	⑦	⑧	⑨	⑩
B end	Label, marker tube No.	1	2	3	4	5	6	7	8	COM	COM

●-F101□□dedicated cable assembly

FMA-101W- □ - □

Note: When wiring specification is the **-F101□N** (no power terminal) type, the -F101 pin location No.9 on the manifold side is set to NC (unused pin).

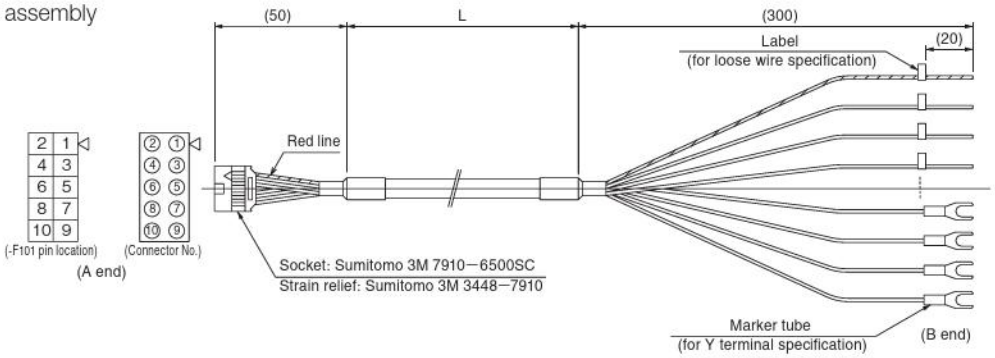

A end	-F101 pin location	1	2	3	4	5	6	7	8	9	10
	Connector No.	①	②	③	④	⑤	⑥	⑦	⑧	⑨	⑩
B end	Label, marker tube No.	1	2	3	4	5	6	7	8	−	+

●-F200□□dedicated cable assembly

FMA-200W- □ - □

Note: When wiring specification is the **-F200□N** (no power terminal) type, the -F200 pin location No.17 and 18 on the manifold side are set to NC (unused pins).

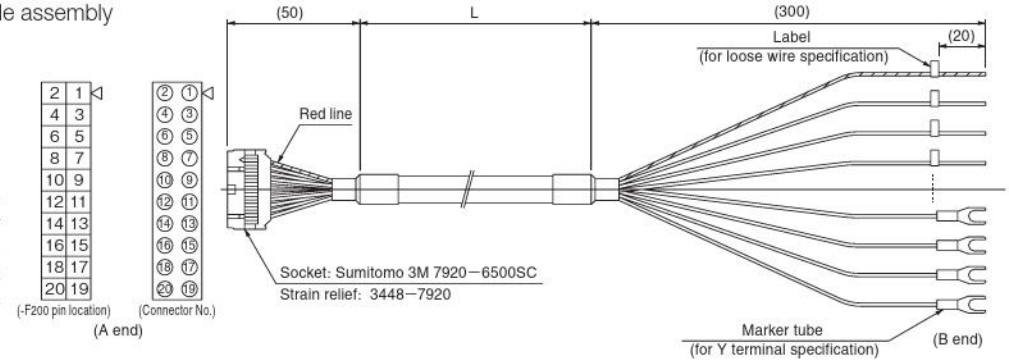

A end	-F200 pin location	1	2	3	4	5	6	7	8	9	10	11	12	13	14	15	16	17	18	19	20
	Connector No.	①	②	③	④	⑤	⑥	⑦	⑧	⑨	⑩	⑪	⑫	⑬	⑭	⑮	⑯	⑰	⑱	⑲	⑳
B end	Label, marker tube No.	1	2	3	4	5	6	7	8	9	10	11	12	13	14	15	16	−	−	+	+

●-F201□□dedicated cable assembly

FMA-201W- □ - □

Notes: 1. Be aware the pin location No. and connector No. are not the same.
2. When wiring specification is the **-F201□N** (no power terminal) type, the **-F201** pin location No.9 and 19 on the manifold side are set to NC (unused pins).

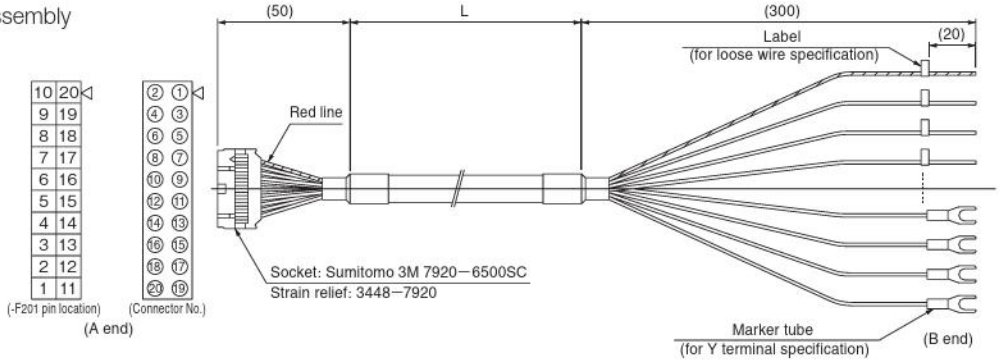

A end	-F201 pin location	1	2	3	4	5	6	7	8	9	10	11	12	13	14	15	16	17	18	19	20
	Connector No.	⑳	⑱	⑯	⑭	⑫	⑩	⑧	⑥	④	②	⑲	⑰	⑮	⑬	⑪	⑨	⑦	⑤	③	①
B end	Label, marker tube No.	1	2	3	4	5	6	7	8	−	+	9	10	11	12	13	14	15	16	−	+

●-F260□□dedicated cable assembly

FMA-260W- □ - □

Note: When wiring specification is the **-F260□N** (no power terminal) type, the **-F260** pin location No.23 and 24 on the manifold side are set to NC (unused pins).

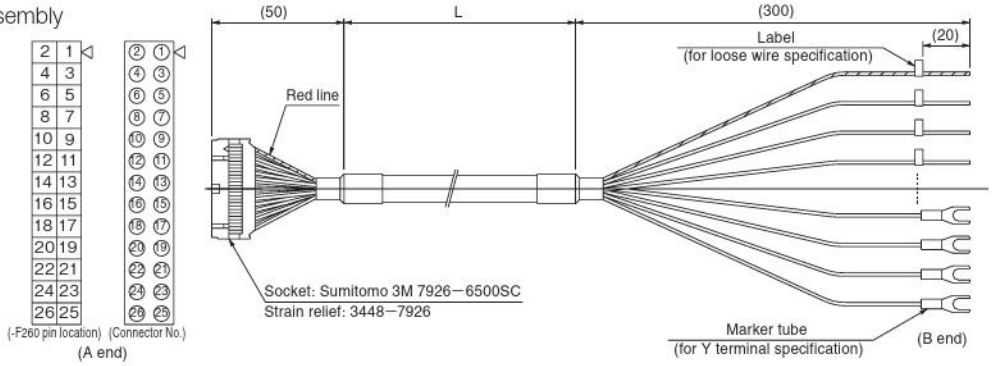

A end	-F260 pin location	1	2	3	4	5	6	7	8	9	10	11	12	13	14	15	16	17	18	19	20	21	22	23	24	25	26
	Connector No.	①	②	③	④	⑤	⑥	⑦	⑧	⑨	⑩	⑪	⑫	⑬	⑭	⑮	⑯	⑰	⑱	⑲	⑳	㉑	㉒	㉓	㉔	㉕	㉖
B end	Label, marker tube No.	1	2	3	4	5	6	7	8	9	10	11	12	13	14	15	16	17	18	19	20			−	−	+	+

●-D250□□dedicated cable assembly

FMA-250W- □ - □

Notes: 1. Be aware the pin location No. and connector No. are not the same.
2. When wiring specification is the **-D250□N** (no power terminal) type, the **-D250** pin location No.20, 21 and 22 on the manifold side are set to NC (unused pins).

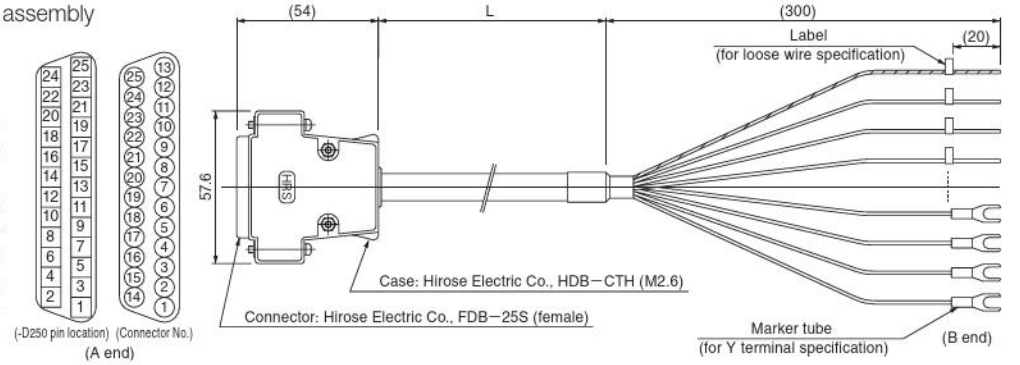

A end	-D250 pin location	1	2	3	4	5	6	7	8	9	10	11	12	13	14	15	16	17	18	19	20	21	22	23	24	25
	Connector No.	①	⑭	②	⑮	③	⑯	④	⑰	⑤	⑱	⑥	⑲	⑦	⑳	⑧	㉑	⑨	㉒	⑩	㉓	⑪	㉔	⑫	㉕	⑬
B end	Label, marker tube No.	1	2	3	4	5	6	7	8	9	10	11	12	13	14	15	16				−	−	−	+	+	+

●-D251□□dedicated cable assembly

FMA-251W- □ - □

Note: When wiring specification is the **-D251□N** (no power terminal) type, the **-D251** pin location No.12 and 13 on the manifold side are set to NC (unused pins).

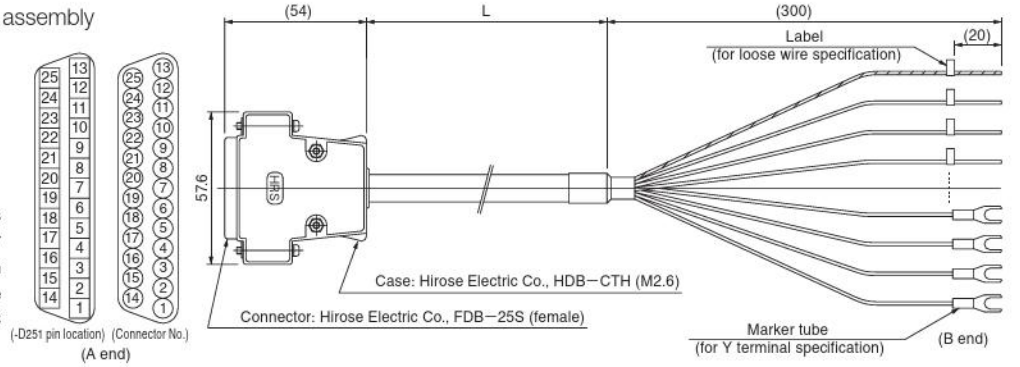

A end	-D251 pin location	1	2	3	4	5	6	7	8	9	10	11	12	13	14	15	16	17	18	19	20	21	22	23	24	25
	Connector No.	①	②	③	④	⑤	⑥	⑦	⑧	⑨	⑩	⑪	⑫	⑬	⑭	⑮	⑯	⑰	⑱	⑲	⑳	㉑	㉒	㉓	㉔	㉕
B end	Label, marker tube No.	1	2	3	4	5	6	7	8	9	10		−	−	11	12	13	14	15	16	17	18	19	20	+	+

SOLENOID VALVES
F10 SERIES

Contents

Specifications — 60

ORDER CODES

Single Valve Unit — 66
Monoblock Manifold A Type (Base Piping Type) — 69
Monoblock Manifold F Type (Direct Piping Type) — 72
Monoblock Manifold A Type, Wire-saving Type (Base Piping Type) — 76
Monoblock Manifold F Type, Wire-saving Type (Direct Piping Type) — 78
PC Board Manifold A Type (Base Piping Type) — 80
PC Board Manifold F Type (Direct Piping Type) — 84
Split Manifold Non-plug-in Type — 86
Split Manifold Plug-in Type — 92
Split Manifold Serial Transmission Type — 96
Easy Assembly Type Manifold Non-plug-in Type — 100
Easy Assembly Type Manifold Plug-in Type — 106
Easy Assembly Type Manifold Serial Transmission Type — 112

DIMENSIONS

Single Valve Unit — 118
Monoblock Manifold — 121
Monoblock Manifold, Wire-saving Type — 123
PC Board Manifold — 125
Split Manifold Non-plug-in Type — 126
Split Manifold Plug-in Type — 128
Split Manifold Serial Transmission Type — 137
Easy Assembly Type Manifold Non-plug-in Type — 144
Easy Assembly Type Manifold Plug-in Type — 146
Easy Assembly Type Manifold Serial Transmission Type — 151

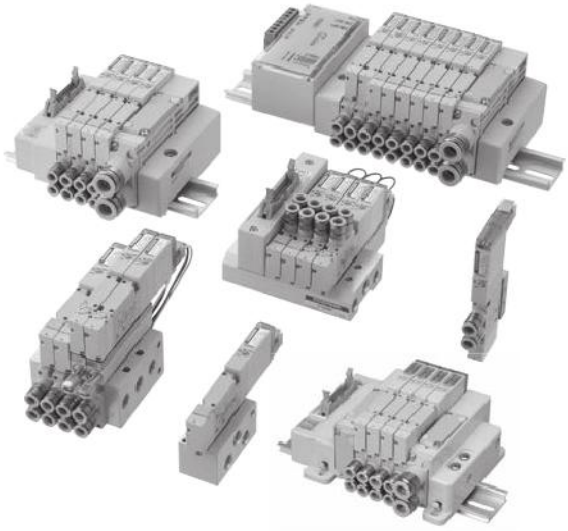

F10 SERIES Specifications

Specifications

Basic Models and Valve Functions

Item \ Basic model	F10□T0	F10□T1 F10□T2	F10□T3 F10□T4 F10□T5	F10□TA F10□TB F10□TC
Number of positions	2 positions		3 positions	4 positions
Number of ports	5			Tandem 3-port
Valve function	Single solenoid only	Both single and double solenoid use	Closed center, Exhaust center, Pressure center	NC/NC, NO/NO, NC/NO

Remark: For the optional specifications and order codes, see p.66.

Specifications

Item \ Basic model		F10□T0 F10□T1 F10□T2	F10□T3 F10□T4 F10□T5	F10□TA F10□TB F10□TC	F10□T0G F10□T1G F10□T2G	F10□T3G F10□T4G F10□T5G	F10□T0V F10□T1V F10□T2V	F10□T3V
Media		Air						
Operation type		Internal pilot type			External pilot type (for positive pressure)		External pilot type (for vacuum)	
Flow rate characteristics	Sonic conductance C $dm^3/(s \cdot bar)$ Note1	0.97	0.93	0.75	0.97	0.93	0.97	0.93
	Effective area Note2 mm^2 (Cv)	4.8 (0.27)	4.6 (0.25)	3.7 (0.21)	4.8 (0.27)	4.6 (0.25)	4.8 (0.27)	4.6 (0.25)
Port size Note3		M5×0.8, 10-32UNF, dual use fitting for φ4 and φ6, Rc1/8, NPT1/8						
Lubrication		Not required						
Operating pressure range	Main valve	0.2~0.7 MPa [29~102 psi.]			0~0.7 MPa [0~102 psi.] Note4		−100 kPa~0.15 MPa [−29.53 in.Hg~22 psi.]	
	External pilot	——			0.2~0.7 MPa [29~102 psi.] Note4		0.2~0.7 MPa [29~102 psi.]	
Proof pressure	MPa [psi.]	1.05 [152]						
Response time Note5 ON/OFF ms	12VDC, 24VDC	15/15(20) or below	15/20 (25) or below	15/20 (25) or below	15/15 (20) or below	15/20 (25) or below	15/15 (20) or below	15/20 (25) or below
	100VAC	15/15 or below	15/20 or below	——	15/15 or below	15/20 or below	15/15 or below	15/20 or below
Maximum operating frequency	Hz	5						
Minimum time to energize for self holding Note6	ms	50	——		50	——	50	——
Operating temperature range (atmosphere and media)	°C [°F]	5~50 [41~122]						
Shock resistance	m/s^2[G]	294.2 [30]						
Mounting direction		Any						

Notes: 1. For details, see the flow rate characteristics on p.61.
2. The effective area is a calculated value, and not a measured value.
3. For details, see the port size on p.61.
4. When the main valve pressure is 0.2~0.7 MPa [29~102 psi.], set the external pilot pressure to the main valve pressure or higher, and 0.7 MPa [102 psi.] or less.
5. Values when air pressure is 0.5 MPa [73 psi.]. For switching phase timing in the AC specification, add a maximum of 5 ms to the response time. The values for 2-position valves are those when used as a single solenoid, and the values for 3-position valves are those when switching from the neutral position of closed center. Values in parentheses ( ) are for low-current type.
6. When used as a double solenoid valve. Excludes **T0.**

Remark: Specification values are based on Koganei test standards.

Solenoid Specifications

Item \ Rated voltage			12VDC	24VDC (Standard type)	24VDC (Low-current type)	100VAC		120VAC	
Voltage range		V	10.8~13.2 (12±10%)	21.6~26.4 (24±10%)	21.6~26.4 (24±10%)	90~110 (100±10%)		108~132 (120±10%)	
Rated frequency		Hz	—	—	—	50	60	50	60
Standard	Current (when rated voltage is applied)	mA (r.m.s)	33	17	—	8		8.3	
Standard	Power consumption	W	0.4	0.4	—	0.8 VA		1 VA	
Low-current type	Current (when rated voltage is applied)	Starting mA	—	—	17	—		—	
Low-current type		Holding mA			4.2				
Low-current type	Power consumption	Starting W	—	—	0.4	—		—	
Low-current type		Holding W			0.1				
Low-current type	Starting time (standard)	ms	—	—	70	—		—	
Allowable leakage current		mA	2.0	1.0	1.0	1.0		1.0	
Type of insulation			Type B						
Insulation resistance Note1		MΩ	Over 100						
Color of LED indicator Note2			14(SA) : Red, 12(SB) : Green						
Surge suppression (as standard)			Surge absorption transistor		Flywheel diode	Bridge diode			

Notes: 1. Value at 500VDC megger.
2. The color of the **T0** indicator is red only.

Remark: Specification values are based on Koganei test standards.

Cylinder Operating Speed

How to obtain cylinder speed

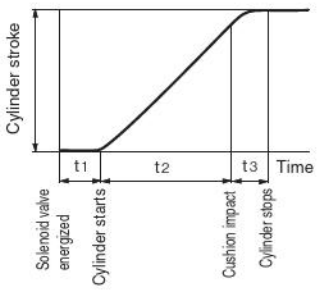

Measuring conditions

- Air pressure : 0.5 MPa [73 psi.]
- Piping (outer diameter × inner diameter × length) : $\phi 6 \times \phi 4 \times 1000$ mm [39 in.]
- Fitting : Quick fitting TS6-01
- Load ratio $= \frac{\text{Load}}{\text{Cylinder theoretical thrust}}$ (%)
- Cylinder stroke : 150 mm [5.91 in.]

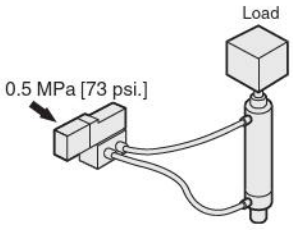

Maximum operating speed

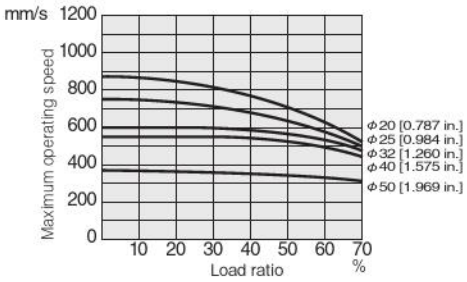

1 mm/s = 0.0394 in./sec.

Delay time

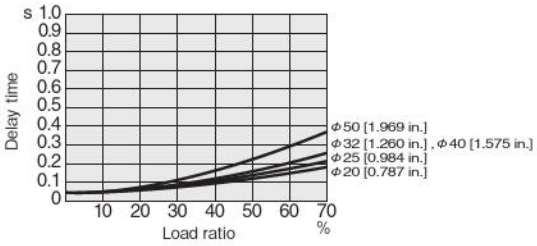

Note: Delay time may vary according to the cylinder stroke.

Flow Rate

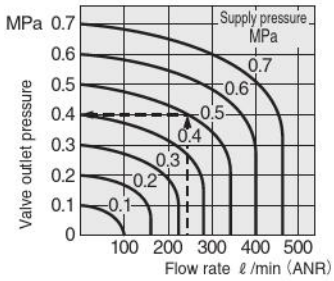

1 MPa = 145 psi., 1 ℓ/min = 0.0353 ft.^{3}/min.

How to read the graph

When the supply pressure is 0.5 MPa [73 psi.] and flow rate is 240R/min [8.47 ft.^{3}/min.] (ANR), the valve outlet pressure becomes 0.4 MPa [58 psi.].

Port Size

Description/Piping specification		PR	X (P2)	4 (A), 2 (B)	1 (P), 3 (R2), 5 (R1), 3, 5 (R)
With sub-base		M5×0.8, 10-32UNF	M5×0.8, 10-32UNF	Rc1/8, NPT1/8	Rc1/8, NPT1/8
Single unit	With female thread block	—	—	M5×0.8, 10-32UNF	M5×0.8, 10-32UNF
	With dual use fitting block	—	—	Dual use fitting for φ4 and φ6	M5×0.8, 10-32UNF
	With single use fitting block	—	—	φ4 or φ6	M5×0.8, 10-32UNF
Manifold	Monoblock type with female thread block, and PC board type with female thread block	M5×0.8, 10-32UNF	M5×0.8, 10-32UNF	M5×0.8, 10-32UNF	Rc1/8, NPT1/8
	Monoblock type with fitting block, and PC board type with fitting block	M5×0.8, 10-32UNF	M5×0.8, 10-32UNF	Dual use fitting for φ4 and φ6	Rc1/8, NPT1/8
	Monoblock type with single use fitting block, and PC board type with single use fitting block	M5×0.8, 10-32UNF	M5×0.8, 10-32UNF	φ4 or φ6	Rc1/8, NPT1/8
	Split type with female thread block, and serial transmission type with female thread block	—	M5×0.8, 10-32UNF	M5×0.8, 10-32UNF	Rc1/4, NPT1/4
	Split type with fitting block, and serial transmission type with fitting block	—	M5×0.8, 10-32UNF	Dual use fitting for φ4 and φ6	Dual use fitting for φ8 and φ10
	Split type with single use fitting block, and serial transmission type with single use fitting block	—	M5×0.8, 10-32UNF	φ4 or φ6	Single use fitting for φ8 or φ10
	Easy assembly type with female thread block, and serial transmission type with female thread block	—	M5×0.8, 10-32UNF	M5×0.8, 10-32UNF	Rc1/8, NPT1/8
	Easy assembly type with fitting block, and serial transmission type with fitting block	—	M5×0.8, 10-32UNF	Dual use fitting for φ4 and φ6	Dual use fitting for φ6 and φ8
	Easy assembly type with single use fitting block, and serial transmission type with single use fitting block	—	M5×0.8, 10-32UNF	φ4 or φ6	Single use fitting for φ6 or φ8

Flow Rate Characteristics

● When used as a single unit

Basic model	1(P)→2(B)/1(P)→4(A)		2(B)→3(R2)/4(A)→5(R1)	
	Sonic conductance C dm³/(s·bar)	Critical pressure ratio b	Sonic conductance C dm³/(s·bar)	Critical pressure ratio b
F10□T0-A2 **F10□T1-A2** **F10□T2-A2**	0.85	0.14	0.85	0.26
F10□T3-A2 **F10□T4-A2** **F10□T5-A2**	0.82	0.13	0.82	0.29
F10□TA-A2 **F10□TB-A2** **F10□TC-A2**	0.68	0.30	0.69	0.30
F10□T0-F3 **F10□T1-F3** **F10□T2-F3**	0.73	0.29	0.58	0.47
F10□T3-F3 **F10□T4-F3** **F10□T5-F3**	0.69	0.26	0.57	0.46
F10□TA-F3 **F10□TB-F3** **F10□TC-F3**	0.61	0.28	0.54	0.44
F10□T0-F4 **F10□T1-F4** **F10□T2-F4**	0.54	0.39	0.53	0.37
F10□T3-F4 **F10□T4-F4** **F10□T5-F4**	0.53	0.43	0.51	0.34
F10□TA-F4 **F10□TB-F4** **F10□TC-F4**	0.50	0.32	0.50	0.30

Basic model	1(P)→2(B)/1(P)→4(A)		2(B)→3(R2)/4(A)→5(R1)	
	Sonic conductance C dm³/(s·bar)	Critical pressure ratio b	Sonic conductance C dm³/(s·bar)	Critical pressure ratio b
F10□T0-F5 **F10□T1-F5** **F10□T2-F5**	0.57	0.39	0.54	0.38
F10□T3-F5 **F10□T4-F5** **F10□T5-F5**	0.57	0.41	0.54	0.40
F10□TA-F5 **F10□TB-F5** **F10□TC-F5**	0.53	0.33	0.51	0.31
F10□T0-F6 **F10□T1-F6** **F10□T2-F6**	0.64	0.47	0.56	0.42
F10□T3-F6 **F10□T4-F6** **F10□T5-F6**	0.61	0.42	0.56	0.40
F10□TA-F6 **F10□TB-F6** **F10□TC-F6**	0.57	0.34	0.52	0.40

Note: For **-F4**, value assumes **TS6-M5M** is mounted on the piping port.

● When mounted on a manifold

Valve type \ Manifold model		Monoblock manifold F type **F10M□F (FP)**		Monoblock manifold A type **F10M□A (AP)**		Split manifold **F10M□N (P) (S)**		Easy assembly type manifold **F10M□XN (P) (S)**	
		1(P)→2(B)/1(P)→4(A)	2(B)→3(R2)/4(A)→5(R1)	1(P)→2(B)/1(P)→4(A)	2(B)→3(R2)/4(A)→5(R1)	1(P)→2(B)/1(P)→4(A)	2(B)→3(R2)/4(A)→5(R1)	1(P)→2(B)/1(P)→4(A)	2(B)→3(R2)/4(A)→5(R1)
		Sonic conductance C dm³/(s/bar)		Sonic conductance C dm³/(s/bar)		Sonic conductance C dm³/(s/bar)		Sonic conductance C dm³/(s/bar)	
F10□T0□ **F10□T1□** **F10□T2□**	Outlet port dual use fitting for ϕ4 and ϕ6 ※These are the cases of ϕ6.	0.84	0.82	0.75	0.76	0.97	0.93	1.06	1.00
F10□T3□ **F10□T4□** **F10□T5□**		0.83	0.78	0.73	0.72	0.93	0.89	0.99	0.95
F10□TA□ **F10□TB□** **F10□TC□**		0.70	0.70	0.64	0.66	0.75	0.73	0.82	0.84
F10□T0□ **F10□T1□** **F10□T2□**	Output port ϕ4 fitting	0.66	0.72	0.63	0.69	0.72	0.79	0.84	0.79
F10□T3□ **F10□T4□** **F10□T5□**		0.65	0.70	0.62	0.67	0.70	0.77	0.82	0.80
F10□TA□ **F10□TB□** **F10□TC□**		0.60	0.64	0.56	0.62	0.63	0.67	0.73	0.74
F10□T0□ **F10□T1□** **F10□T2□**	Output port ϕ6 fitting	0.72	0.81	0.67	0.73	0.80	0.83	0.88	0.86
F10□T3□ **F10□T4□** **F10□T5□**		0.71	0.73	0.66	0.69	0.78	0.80	0.84	0.85
F10□TA□ **F10□TB□** **F10□TC□**		0.64	0.66	0.58	0.63	0.68	0.69	0.72	0.75

Notes: 1. When the individual air supply spacer or the individual air exhaust spacer, the back pressure prevention valve, or the stop valve is used, sonic conductance decreases by about 30%.
2. For the flow rate characteristics of other outlet ports, consult us.

Remark: Specification values are based on Koganei test standards.

Mass

Single Valve Unit Mass

g [oz.]

F10□T□□	F10□T□□-A1	F10□T□□-A2	F10□T□□-FJ	F10□T□□-FJ5	F10□T□□-FJ6
Outlet portion None	Outlet portion With plate	Outlet portion With plate	Outlet portion With dual use fitting block	Outlet portion With ϕ4 fitting block	Outlet portion With ϕ6 fitting block
Inlet portion None	Inlet portion None	Inlet portion With A type sub-base	Inlet portion None	Inlet portion None	Inlet portion None
44 [1.55]	47 [1.66]	116 [4.09]	55 [1.94]	57 [2.01]	60 [2.12]

g [oz.]

F10□T□□-FM	F10□T□□-F3	F10□T□□-F4	F10□T□□-F5	F10□T□□-F6
Outlet portion With female thread block	Outlet portion With dual use fitting block	Outlet portion With female thread block	Outlet portion With ϕ4 fitting block	Outlet portion With ϕ6 fitting block
Inlet portion None	Inlet portion With female thread block	Inlet portion With female thread block	Inlet portion With female thread block	Inlet portion With female thread block
51 [1.80]	62 [2.19]	58 [2.05]	64 [2.26]	67 [2.36]

Basic Type **F10□T0** is 10 g [0.35 oz.] less than the mass shown above.

Monoblock Manifold Mass (single valve unit included)

g [oz.]

Monoblock manifold	Mass calculation of each unit			
	4(A), 2(B) ports outlet specifications			
	Female thread block	Dual use fitting block	ϕ4 fitting block	ϕ6 fitting block
A type	(97×n)+79 [(3.42×n)+2.79]	(101×n)+79 [(3.56×n)+2.79]	(103×n)+79 [(3.63×n)+2.79]	(106×n)+79 [(3.74×n)+2.79]
F type	(71×n)+57 [(2.50×n)+2.01]	(75×n)+57 [(2.65×n)+2.01]	(77×n)+57 [(2.72×n)+2.01]	(80×n)+57 [(2.82×n)+2.01]

g [oz.]

Monoblock manifold	Additional mass (wire-saving type)		
	Wiring specification		
	-F100N, -F101N	**-F200N, -F201N, -F260N**	**-D250N, -D251N**
A type	164+4n [5.78+0.14n]	166+4n [5.86+0.14n]	170+4n [6.00+0.14n]
F type	112+4n [3.95+0.14n]	114+4n [4.02+0.14n]	118+4n [4.16+0.14n]

Calculation example : **F10M8AM**

stn.1～stn.8 F10T1-A1-PS DC24V

(97×8)+79 = 855 g [30.16 oz.]

When mounting the block-off plate, subtract 50 g [1.76 oz] per unit from the above calculation result.

When mounting the **F10□T0** specification valve, subtract 10 g [0.35 oz.] per unit from the above calculation result.

PC Board Manifold Mass (single valve unit included)

g [oz.]

PC board manifold	Mass calculation of each unit				
	4(A), 2(B) ports outlet specifications				Circuit board and connector portion
	Female thread block	Dual use fitting block	ϕ4 fitting block	ϕ6 fitting block	
A type	(97×n)+79 [(3.42×n)+2.79]	(101×n)+79 [(3.56×n)+2.79]	(103×n)+79 [(3.63×n)+2.79]	(106×n)+79 [(3.74×n)+2.79]	(2×n)+29 [(0.07×n)+1.02]
F type	(76×n)+83 [(2.68×n)+2.93]	(80×n)+83 [(2.82×n)+2.93]	(82×n)+83 [(2.89×n)+2.93]	(85×n)+83 [(3.00×n)+2.93]	

Calculation example : **F10M8APM-F201-W**

stn.1～stn.8 F10T1-A1-PP DC24V

(97×8)+79+(2×8)+29=900 g [31.75 oz.]

When mounting the block-off plate, subtract 50 g [1.76 oz] per unit from the above calculation result.

When mounting the **F10□T0** specification valve, subtract 10 g [0.35 oz.] per unit from the above calculation result.

Optional Parts Mass

Stop valve (-STP): 29 g [023 oz.]

Mass of Split Manifold and Serial Transmission Type

Because the valve and manifold have the same output specifications, their mass is the same. The mass can only be changed by choosing a different type of inlet/outlet block.

Mass of Split Manifold Non-Plug-in Type (single valve unit included)

g [oz.]

	Mass calculation of each unit			
	4(A), 2(B) ports outlet specifications			
Non-plug-in type	Female thread block	Dual use fitting block	φ4 fitting block	φ6 fitting block
	(75×n)+120 [(2.65×n)+4.23]	(79×n)+120 [(2.79×n)+4.23]	(81×n)+120 [(2.86×n)+4.23]	(84×n)+120 [(2.96×n)+4.23]

g [oz.]

Additional mass			
Piping block specification			
Female thread block	Dual use fitting block	φ8 fitting block	φ10 fitting block
111 [3.92]	125 [4.41]	149 [5.26]	159 [5.61]

Calculation example : **F10M8N-MR**
stn.1～stn.8 F10T1-A1-PS DC24V
(75×8)+120+111=831 g [29.31 oz.]
When mounting the block-off plate, subtract 50 g [1.76 oz] per unit from the above calculation result.
When mounting the **F10□T0** specification valve, subtract 10 g [0.35 oz.] per unit from the above calculation result.

Mass of Split Manifold Plug-in Type/Serial Transmission Type (single valve unit included)

g [oz.]

	Mass calculation of each unit			
	4(A), 2(B) ports outlet specifications			
Plug-in type Serial transmission compatible manifold	Female thread block	Dual use fitting block	φ4 fitting block	φ6 fitting block
	(79×n)+120 [(2.79×n)+4.23]	(83×n)+120 [(2.93×n)+4.23]	(85×n)+120 [(3.00×n)+4.23]	(88×n)+120 [(3.10×n)+4.23]

g [oz.]

Additional mass			
Piping block specification			
Female thread block	Dual use fitting block	φ8 fitting block	φ10 fitting block
111 [3.92]	125 [4.41]	149 [5.26]	159 [5.61]

g [oz.]

Additional mass			
Wiring block specification			
-F100□□, -F101□□	**-F200□□, -F201□□, -F260□□**	**-D250□□, -D251□□**	**-T200**
32 [1.13]	34 [1.20]	39 [1.38]	110 [3.88]

g [oz.]

Additional mass			
Serial transmission block specification			
Stand-alone type	Integrated type	Integrated type (For EtherCAT)	Integrated type (For EtherNet/IP)
231 [8.15]	138 [4.87]	100 [3.53]	110 [3.88]

Calculation example : **F10M8PM-MR-F201 DC24V**
stn.1～stn.8 F10T1-A1 DC24V
(79×8)+120+111+34=897 g [31.64 oz.]
When mounting the block-off plate, subtract 50 g [1.76 oz] per unit from the above calculation result.
When mounting the **F10□T0** specification valve, subtract 10 g [0.35 oz.] per unit from the above calculation result.

Mass of Easy Assembly Type Manifold and Serial Transmission Type Manifold

Mass of Easy Assembly Type Manifold Non-Plug-in Type (single valve unit included)

g [oz.]

Mounting type	Mass calculation of each unit			
	Outlet port specifications			
	Female thread block	Dual use fitting block	ϕ4 fitting block	ϕ6 fitting block
No code	(83 x n) + 229 [(2.93 × n) + 8.078]	(87 x n) + 229 [(3.069 × n) + 8.078]	(89 x n) + 229 [(3.139 × n) + 8.078]	(92 x n) + 229 [(3.245 × n) + 8.078]
-DN	(83 x n) + 290 [(2.93 × n) + 10.229]	(87 x n) + 290 [(3.069 × n) + 10.229]	(89 x n) + 290 [(3.139 × n) + 10.229]	(92 x n) + 290 [(3.245 × n) + 10.229]
-DR	(85 x n) + 308 [(3.00 × n) + 10.864]	(89 x n) + 308 [(3.139 × n) + 10.864]	(91 x n) + 308 [(3.210 × n) + 10.864]	(94 x n) + 308 [(3.316 × n) + 10.864]

g [oz.]

Fitting specifications	Additional mass			
	Intake/exhaust outlet			
	Female thread block	Dual use fitting block	ϕ6 fitting block	ϕ8 fitting block
J□ M□	22 [0.776]	32 [1.129]	43 [1.517]	48 [1.693]
J□D MD□	26 [0.917]	46 [1.623]	68 [2.399]	78 [2.751]
J□T MT□	33 [1.164]	63 [2.222]	96 [3.386]	111 [3.92]

Calculation example: **F10M8XNJ-JR-DR DC24V**

stn.1 ～ 8 F10T1-A1-PS DC24V

(89 x 8) + 308 + 32 = 1052 g [37.11 oz.]

When mounting the block-off plate, subtract 50 g [1.76 oz.] per unit from the above calculation result.

When mounting the **F10□T0** specification valve, subtract 10 g [0.35 oz.] per unit from the above calculation result.

Mass of Easy Assembly Type Manifold Plug-in Type/Serial Transmission Type Manifold (single valve unit included)

g [oz.]

Mounting type	Mass calculation of each unit			
	Outlet port specifications			
	Female thread block	Dual use fitting block	ϕ4 fitting block	ϕ6 fitting block
No code	(86 x n) + 227 [(3.034 × n) + 8.007]	(90 x n) + 227 [(3.175 × n) + 8.007]	(92 x n) + 227 [(3.245 × n) + 8.007]	(95 x n) + 227 [(3.351 × n) + 8.007]
-DN	(86 x n) + 288 [(3.034 × n) + 10.159]]	(90 x n) + 288 [(3.175 × n) + 10.159]	(92 x n) + 288 [(3.245 × n) + 10.159]	(95 x n) + 288 [(3.351 × n) + 10.159]
-DR	(88 x n) + 310 [(3.104 × n) + 10.935]	(92 x n) + 310 [(3.245 × n) + 10.935]	(94 x n) + 310 [(3.316 × n) + 10.935]	(97 x n) + 310 [(3.422 × n) + 10.935]

g [oz.]

Fitting specifications	Additional mass			
	Intake/exhaust outlet			
	Female thread block	Dual use fitting block	ϕ6 fitting block	ϕ8 fitting block
J□ M□	22 [0.776]	32 [1.129]	43 [1.517]	48 [1.693]
J□D MD□	26 [0.917]	46 [1.623]	68 [2.399]	78 [2.751]
J□T MT□	31 [1.093]	61 [2.152]	94 [3.316]	109 [3.845]

g [oz.]

Additional mass			
Wiring block specifications			
-F100□□, -F101□□	**-F200□□, -F201□□, -F260□□**	**-D250□□, -D251□□**	**-T200**
36 [1.270]	38 [1.340]	43 [1.517]	116 [4.092]

g [oz.]

Additional mass		
Serial transmission block specifications (Monoblock)		
For CC-Link, DeviceNet, and CompoNet	For EtherCAT	For EtherNet/IP
138 [4.87]	100 [3.53]	110 [3.88]

Calculation example: **F10M8XPJ-JR-F201-DR DC24V**

stn.1 ～ 8 F10T1-A1 DC24V

(98 x 8) + 310 + 32 + 38 = 1116 g [39.37 oz.]

When mounting the block-off plate, subtract 50 g [1.76 oz.] per unit from the above calculation result.

When mounting the **F10□T0** specification valve, subtract 10 g [0.35 oz.] per unit from the above calculation result.

F10 Series Single Valve Unit Order Codes

Valve size

F10
10 mm [0.394 in.] width
Standard type

F10L
10 mm [0.394 in.] width
Low-current type

Valve outlet type

Without inlet/outlet block

With A type outlet plate

With A type sub-base

-A2 inlet/outlet port
F10: Rc1/8
-A2H inlet/outlet port
F10: NPT1/8

With outlet port dual use fitting block

Outlet port fitting
F10: ϕ 4, ϕ 6

With outlet port single use fitting block

Outlet port fitting
F10: ϕ 4

With outlet port single use fitting block

Outlet port fitting
F10: ϕ 6

With outlet port female thread block

-FM outlet port
F10: M5 × 0.8
-FMH outlet port
F10: 10-32UNF

With outlet port dual use fitting block
With inlet port female thread block Note6

Outlet port fitting
F10: ϕ 4, ϕ 6

With outlet port female thread block
With inlet port female thread block Note6

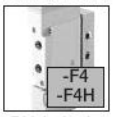

-F4 inlet/outlet port
F10: M5 × 0.8
-F4H inlet/outlet port
F10: 10-32UNF

With outlet port single use fitting block
With inlet port female thread block Note6

Outlet port fitting
F10: ϕ 4

With outlet port single use fitting block
With inlet port female thread block Note6

Outlet port fitting
F10: ϕ 6

3-port normally closed (NC) Note5
With outlet port single use fitting block

Outlet port fitting
F10: ϕ 4

3-port normally open (NO) Note5
With outlet port single use fitting block

Outlet port fitting
F10: ϕ 4

3-port normally closed (NC) Note5
With outlet port single use fitting block

Outlet port fitting
F10: ϕ 6

3-port normally open (NO) Note5
With outlet port single use fitting block

Outlet port fitting
F10: ϕ 6

3-port normally closed (NC) Note5
With outlet port female thread block

-FMA outlet port
F10: M5 × 0.8
-FMAH outlet port
F10: 10-32UNF

3-port normally open (NO) Note5
With outlet port female thread block

-FMB outlet port
F10: M5 × 0.8
-FMBH outlet port
F10: 10-32UNF

3-port normally closed (NC) Note5
With outlet port female thread block
With inlet port female thread block Note6

-F4A inlet/outlet port
F10: M5 × 0.8
-F4AH inlet/outlet port
F10: 10-32UNF

3-port normally open (NO) Note5
With outlet port female thread block
With inlet port female thread block Note6

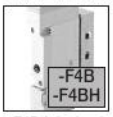

-F4B inlet/outlet port
F10: M5 × 0.8
-F4BH inlet/outlet port
F10: 10-32UNF

3-port normally closed (NC) Note5
With outlet port single use fitting block
With inlet port female thread block Note6

Outlet port fitting
F10: ϕ 4

3-port normally open (NO) Note5
With outlet port single use fitting block
With inlet port female thread block Note6

Outlet port fitting
F10: ϕ 4

3-port normally closed (NC) Note5
With outlet port single use fitting block
With inlet port female thread block Note6

Outlet port fitting
F10: ϕ 6

3-port normally open (NO) Note5
With outlet port single use fitting block
With inlet port female thread block Note6

Outlet port fitting
F10: ϕ 6

Wiring specification

L type plug connector
Without connector

S type plug connector
Without connector

S type plug connector
Lead wire 300 mm [11.8 in.]

L type plug connector
Lead wire 300 mm [11.8 in.]

S type plug connector
Lead wire 3000 mm [118 in.]

L type plug connector
Lead wire 3000 mm [118 in.]

DIN connector type with indicator Note12

DIN connector type without connector Note12

-39N

Valve specification

T0 : 2-position, for single solenoid only
T1 : 2-position single solenoid specification (for both single and double solenoid use)
T2 : 2-position double solenoid specification (for both single and double solenoid use)
T3 : 3-position closed center
T4 : 3-position exhaust center Note3
T5 : 3-position pressure center Note3
TA : Tandem 3-port (NC and NC) Note4
TB : Tandem 3-port (NO and NO) Note4
TC : Tandem 3-port (NC and NO) Note4

Operation type

Blank
Internal pilot type

G
External pilot type Note
(for positive pressure)

V
External pilot type Note
(for vacuum) ※
※ This is a vacuum valve.

Note: When using as a single unit, select **-A2** (A type with sub-base) for the valve outlet type. Without a sub-base, piping for the external pilot is not possible.

Manual override

Manual override button

No protrusion with DIN connector

Manual override lever Note1

Protruding locking type Note11

Valve size	Valve specification	Operation type	IP Specifications	Manual override	Valve outlet type	UL compatible type	Wiring specification	Voltage
F10 F10L	T0 T1 T2 T3 T4 Note3 T5 Note3 TA Note4 TB Note4 TC Note4	Blank G V	Blank -P Note9 Note10	Blank -R Note1 -83 Note11	Blank Note2 -A1 Note2 -A2 -A2H -FJ Note2, 3 -FJ5 Note2, 3 -FJ6 Note2, 3 -FM Note2, 3 -FMH Note2, 3 -F3 Note4 -F4 Note4 -F4H Note4 -F5 Note4 -F6 Note4 -FJ5A Note2, 3 -FJ5B Note2, 3 -FJ6A Note2, 3 -FJ6B Note2, 3 -FMA Note2, 3 -FMAH Note2, 3 -FMB Note2, 3 -FMBH Note2, 3 -F4A Note4 -F4AH Note4 -F4B Note4 -F4BH Note4 -F5A Note4 -F5B Note4 -F6A Note4 -F6B Note4	Blank: - -UR: UL certified product	Blank -PN -PS -PL -PS3 -PL3 -39L Note12 -39N Note12	DC24V DC12V Note7 AC100V Note8, 13 AC120V Note8 AC240V Note8, 13

Notes: 1. When the valve specification is **T1** or **T2**, the manual override lever is placed only on the A side.
2. Two manifold mounting screws are included.
3. Not available in the vacuum valves.
4. Not available in external pilot type and vacuum valves.
5. Only for valve specification **T0**, **T1**, and **T2**.
6. Thread size for the inlet port female thread block is **F10:** M5 × 0.8.
7. Not available in low-current type.
8. Not available in low-current type and tandem 3-port valves.
9. The IP65 protective structure around an electrical device that prevents the infiltration of solid foreign material and water from outside.
10. UR is unsupported.
11. Only for wiring specification **-39** □ .
12. Only for F15 series and not available for valve specification **T1**, **TA**, **TB**, and **TC**. In addition, the valve is used only as a double solenoid for **T2**.
13. Not available with DIN connectors.

Remark: Negative common specifications are also available as made to order products (add **-129W** to the end of order code). For details, consult us.

● For internal pilot

F10Z - □

Valve size
10: 10 mm [0.394 in.] width

Parts content
21 : Mounting bracket (mounting bracket, 2 mounting screws)
25 : Sub-base Rc1/8 (sub-base body, gasket, exhaust valve)Note1
P : Plate (plate, gasket, 2 mounting screws)
J : Dual use fitting block (fitting block, gasket, 2 mounting screws)
J5 : Single use fitting block **F10:** ϕ4
J6 : Single use fitting block **F10:** ϕ6
J5A : Single use fitting block for 3-port **F10:** ϕ4 Note3
J6A : Single use fitting block for 3-port F10: ϕ6 Note3
M : Female thread block **F10:** M5×0.8 (female thread block, gasket, 2 mounting screws)
MH : Female thread block **F10:** 10-32UNF (female thread block, gasket, 2 mounting screws)
MA : Female thread block for 3-port **F10:** M5×8 (female thread block, gasket, 2 mounting screws)Note3
MAH : Female thread block for 3-port **F10:** 10-32UNF (female thread block, gasket, 2 mounting screws)Note3
MP : P port female thread block **F10:** M5×0.8 (P port female thread block, gasket)Note1
MPH : P port female thread block **F10:** 10-32UNF (P port female thread block, gasket)Note1
MPP : IP dedicated P port female thread block (P port female thread block, gasket)
GS1 : Gasket (gasket, exhaust valve)Note2

Notes: 1. Valve mounting screws are not included.
2. Caution should be exercised as this gasket is different from the **GS2** gasket for the split-type manifolds.
3. Common to both normally closed (NC) and normally open (NO) types. Select the mounting direction by application requirements.

● For external pilot

F10Z - □

Valve size
10: 10 mm [0.394 in.] width

Parts content
P : Plate (plate, gasket, 2 mounting screws)
J : Dual use fitting block (fitting block, gasket, 2 mounting screws)
J5 : Single use fitting block **F10:** ϕ4
J6 : Single use fitting block **F10:** ϕ6
J5A : Single use fitting block for 3-port **F10:** ϕ4 Note1
J6A : Single use fitting block for 3-port **F10:** ϕ6 Note1
M : Female thread block **F10:** M5×0.8 (female thread block, gasket, 2 mounting screws)
MH : Female thread block **F10:** 10-32UNF (female thread block, gasket, 2 mounting screws)
MA : Female thread block for 3-port **F10:** M5×0.8 (female thread block, gasket, 2 mounting screws)Note1
MAH : Female thread block for 3-port **F10:** 10-32UNF (female thread block, gasket, 2 mounting screws)Note1
GS1 : Gasket (gasket, exhaust valve)Note2

Notes: 1. Common to both normally closed (NC) and normally open (NO) types. Select the mounting direction by application requirements.
2. Caution should be exercised as this gasket is different from the **GS2** gasket for the split type manifolds.

Sub-base for external pilot

F10ZG - 25

Valve size
10: 10 mm [0.394 in.] width
Sub-base Rc1/8

F10ZG - 25H

Valve size
10: 10 mm [0.394 in.] width
Sub-base NPT1/8

Connector-related order codes

JAZ - □ - □

UL compatible type Note1
Blank: -
UR : UL certified product

Valve specification
For **T1, T2, T3, T4, T5, TA, TB, TC**

Connector specification
CP : Connector, lead wire length 300 mm [11.8 in.] (black, red, white, for total of 3 lead wires)
CP3 : Connector, lead wire length 3000 mm [118 in.] (black, red, white, for total of 3 lead wires)
CPN : Connector without lead wire (1 short bar and 3 contacts included)

Remarks: A connector for negative common is also available. See p. 22 for details.
Notes: 1. The lead wire thickness is 24AWG when Blank or 22AWG when UR is specified.

JAZ0 - □ - □

UL compatible type Note1
Blank: -
UR : UL certified product

Valve specification
For **T0**

Connector specification
CP : Connector, lead wire length 300 mm [11.8 in.] (black, red, for total of 2 lead wires)
CP3 : Connector, lead wire length 3000 mm [118 in.] (black, red, for total of 2 lead wires)
CPN : Connector without lead wire (1 short bar, 2 contacts included)

FZ - □

Valve specification
For **T1, T2, T3, T4, T5, TA, TB, TC**

Connector specification
CC1.5 : Cabtyre cable length 1500 mm [59 in.] ※
CC3 : Cabtyre cable length 3000 mm [118 in.] ※

※ For details, see p. 22.

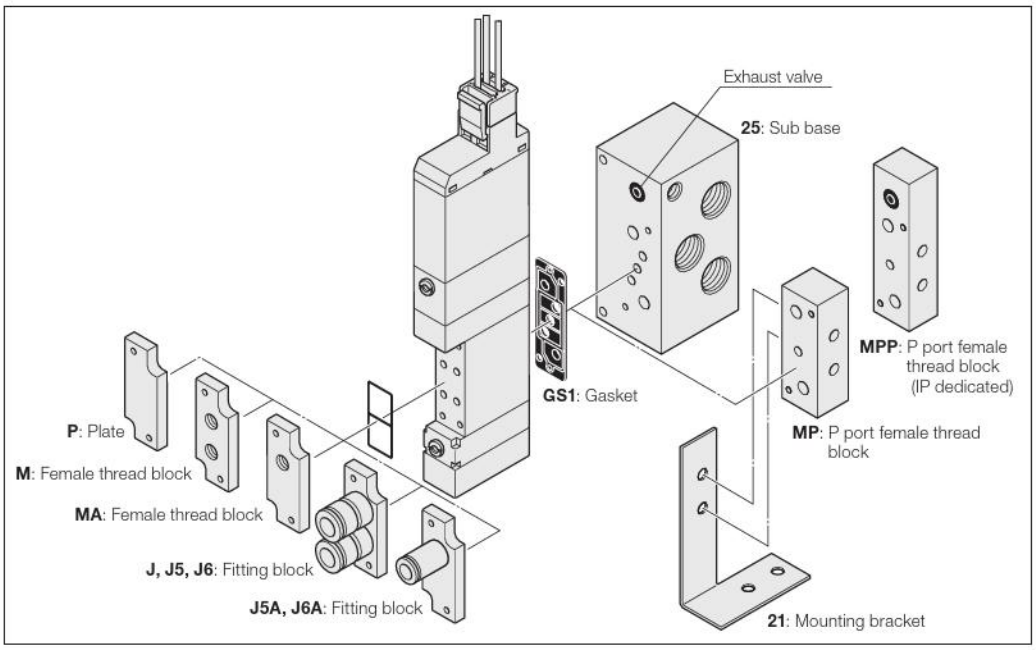

Connector-related order codes

JAZ - P - □ (for double use only)

Valve specification
For **T2, T3, T4, T5, TA, TB,** or **TC**

Connector specification

CP : Connector, lead wire length 300 mm [11.8 in.] (black, red, white, for total of 3 lead wires)
CP3 : Connector, lead wire length 3000 mm [118 in.] (black, red, white, for total of 3 lead wires)
PA : Positive common A type, lead wire length 300 mm [11.8 in.]※
PA3 : Positive common A type, lead wire length 3000 mm [118 in.]※
PB : Positive common B type, lead wire length 300 mm [11.8 in.]※
PB3 : Positive common B type, lead wire length 3000 mm [118 in.]※
PC : Positive common C type, lead wire length 300 mm [11.8 in.]※
PC3 : Positive common C type, lead wire length 3000 mm [118 in.]※
※A common connector assembly.

Notes:
1. When the valve specification is **T1**, select the **JAZ0-P-** □ single dedicated type.
2. When switching between the single and double type (**T1**/**T2**), purchase and use a dedicated connector for single or double use (the number of seal holes in the lead wire differs for the single and double type).
3. There is no white lead wire for the **JAZ0-P-** □ .
4. It is necessary to disassemble the connector to add a common connector assembly. Contact your nearest KOGANEI sales office.
5. For information on use in locations/atmospheres subject to substances other than water, such as organic solvents, cutting oil, or reagents, contact your nearest KOGANEI sales office.
6. For information on replacing the waterproof seal, contact your nearest KOGANEI sales office.

JAZ0 - P - □ (for single use only)

Valve specification
For **T0/T1**

Connector specification

CP : Connector, lead wire length 300 mm [11.8 in.] (black, red, for total of 2 lead wires)
CP3 : Connector, lead wire length 3000 mm [118 in.] (black, red, for total of 2 lead wires)
PA : Positive common A type, lead wire length 300 mm [11.8 in.]※
PA3 : Positive common A type, lead wire length 3000 mm [118 in.]※
PB : Positive common B type, lead wire length 300 mm [11.8 in.]※
PB3 : Positive common B type, lead wire length 3000 mm [118 in.]※
PC : Positive common C type, lead wire length 300 mm [11.8 in.] ※
PC3 : Positive common C type, lead wire length 3000 mm [118 in.]※
※A common connector assembly.

F10 Series Monoblock Manifold A Type (Base Piping Type) Order Codes

Valve size

F10M 10 mm [0.394 in.] width

Manifold outlet specification

With dual use fitting blocks (base piping type)

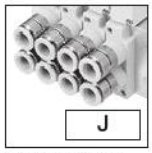

Outlet port fitting
F10: ϕ4, ϕ6

With selectable fittings (base piping type)

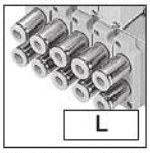

Outlet port should be selected in accordance with the manifold fitting specification.

With female thread blocks (base piping type)

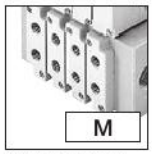

Outlet port female thread
F10: M5 × 0.8

Valve specification

T0 : 2-position, for single solenoid only
T1 : 2-position, single solenoid specification
T2 : 2-position, double solenoid specification
T3 : 3-position, closed center
T4 : 3-position, exhaust center Note6
T5 : 3-position, pressure center Note6
TA : Tandem 3-port (NC and NC) Note7
TB : Tandem 3-port (NO and NO) Note7
TC : Tandem 3-port (NC and NO) Note7

Valve size

F10 Standard type

F10L Low-current type

Pilot specification

Blank Internal pilot manifold

G External pilot manifold

Operation type

Blank
Internal pilot type Note4

G
External pilot type Note5 (for positive pressure)

V
External pilot type Note5 (for vacuum) ※
※ : This is a vacuum valve.

Note: Cannot be mounted together with a positive pressure valve.

Manual override

Manual override button

No protrusion with DIN connector

Manual override lever Note2

Protruding locking type

Valve outlet type

With plate Note3 (base piping type)

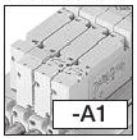

Wiring specification Note11

L type plug connector Without connector

Pre-wired positive common terminal
S type plug connector
Lead wire 300 mm [11.8 in.]

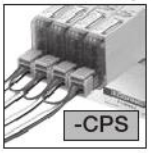

S type plug connector Without connector

Pre-wired positive common terminal
L type plug connector
Lead wire 300 mm [11.8 in.]

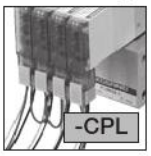

S type plug connector
Lead wire 300 mm [11.8 in.]

Pre-wired positive common terminal
S type plug connector
Lead wire 3000 mm [118 in.]

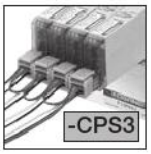

L type plug connector
Lead wire 300 mm [11.8 in.]

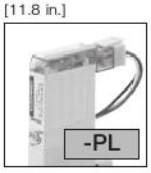

Pre-wired positive common terminal
L type plug connector
Lead wire 3000 mm [118 in.]

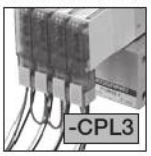

S type plug connector
Lead wire 3000 mm [118 in.]

DIN connector type with indicator Note16

L type plug connector
Lead wire 3000 mm [118 in.]

DIN connector type without connector Note12

-39N

Individual air supply and exhaust spacer, stop valve

Blank : No spacer and no stop valve
-NPM : Individual air supply spacer (with M5 female thread for F10)
-NRM : Individual exhaust spacer (with M5 female thread for F10)
-STP : With stop valve Note4
For details, see p. 26.

Manifold fitting specification

5-port specification

-J5	With single use fitting block (base piping type)	**F10:** ϕ4
-J6	With single use fitting block (base piping type)	**F10:** ϕ6
-M	With female thread block (base piping type)	**F10:** M5 × 0.8
-MH	With female thread block Note14 (base piping type)	**F10:** 10-32UNF

3-port specification

-J5A	With single use fitting block, normally closed (NC) (base piping type)	**F10:** ϕ4
-J5B	With single use fitting block, normally open (NO) (base piping type)	**F10:** ϕ4
-J6A	With single use fitting block, normally closed (NC) (base piping type)	**F10:** ϕ6
-J6B	With single use fitting block, normally open (NO) (base piping type)	**F10:** ϕ6
-MA	With female thread block, normally closed (NC) (base piping type)	**F10:** M5 × 0.8
-MAH	With female thread block, normally closed (NC) Note18 (base piping type)	**F10:** 10-32UNF
-MB	With female thread block, normally open (NO) Note17 (base piping type)	**F10:** M5 × 0.8
-MBH	With female thread block, normally open (NO) Note18 (base piping type)	**F10:** 10-32UNF

Caution: The 3-port specifications are only available in the valve specification **T0**, **T1**, and **T2**.

Back pressure prevention valve

Blank No back pressure prevention valve

-E1 With back pressure prevention valve Note8

Valve size	Valve units	Manifold type	Manifold output specification	Pilot specification	Station	Valve size	Valve specification	Operation type	IP specification	Manual override	Valve outlet type	Wiring specification	Manifold fitting specification	Back pressure prevention valve	Individual air supply and exhaust spacer, stop valve	Voltage
Manifold model					Mounting valve model											
F10M	2 ⋮ 20	A (※Rc)	J M	Blank G	stn. 1 ⋮ stn.□ Note1	F10 F10L	T0 TA Note7 T1 TB Note7 T2 TC Note7 T3 T4 Note6 T5 Note6	Blank Note4 G Note6 V Note6	Blank -P Note12	Blank -R Note2	-A1 Note3	Blank Note11 -PN -CPS -PS -CPL -PL -CPS3 -PS3 -CPL3 -PL3		Blank -E1 Note8	Blank -NPM Note19 -NRM Note19 -STP Note4	DC24V DC12V Note9 AC100V Note14 AC120V Note14
						F10	BP (for block-off plate)								Blank -STP Note4	
F10M	2 ⋮ 20	A (※Rc) AH (※NPT)	L	Blank G	stn. 1 ⋮ stn.□ Note1	F10 F10L	T0 TA Note7 T1 TB Note7 T2 TC Note7 T3 T4 Note6 T5 Note6	Blank Note4 G Note5 V Note5	Blank -P Note12	Blank -R Note2 -83 Note11	-A1 Note3	Blank -CPS -PN -CPL -PS -CPS3 -PL -CPL3 -PS3 -39L Note16 -PL3 -39N Note16	-J5 Note17 -J6A Note17 -J6 Note17 -J6B Note17 -M Note17 -MA Note17 -MH Note18 -MAH Note18 -J5A Note17 -MB Note17 -J5B Note17 -MBH Note18	Blank -E1 Note8	Blank -NPM Note19 -NRM Note19 -STP Note4	DC24V DC12V Note9 AC100V Note14, 19 AC120V Note14 AC240V Note14,15
						F10	BP (for block-off plate)								Blank -STP Note4	

Notes:
1. Valve mounting location is from the left, with the solenoid on top, and the 4(A), 2(B) ports side in front.
2. When the valve specification is **T1** or **T2**, the manual override lever is placed only on the A side.
3. Always enter **-A1**.
4. Cannot be mounted on the external pilot manifold.
5. Cannot be mounted on the internal pilot manifold.
6. Not available in the vacuum valves.
7. Not available in external pilot type and vacuum valves.
8. Not available with the individual exhaust spacer and vacuum valve.
9. Not available in low-current type.
10. Not available in the low current type and tandem 3-port valves.
11. The **-P** □ (including when Blank) and **-CP** □ wiring specifications cannot be mixed.
12. The IP65 protective structure around an electrical device that prevents the infiltration of solid foreign material and water from outside.
13. 3 port type is only supported by the **T0**, **T1**, and **T2** valve type.
14. Not available in low-current type and tandem 3-port valves.
15. Only for wiring specification **-39**□.
16. Not available for valve specification **T1**, **TA**, **TB**, and **TC**. In addition, the valve is used only as a double solenoid for **T2**.
17. Can be selected only when the manifold type is **A**.
18. Can be selected only when the manifold type is **AH**.
19. Not available with DIN connectors (**-39**□).

Remark: Negative common specifications are also available as made to order products (add **-129W** to the ends of the valve and manifold model order codes). For details, consult us.

Gasket (gasket and exhaust valve)

F10Z - GS1

Valve size
10: 10 mm [0.394 in.] width

Block-off plate (block-off plate and 2 mounting screws)

F10BP

Valve size
10: 10 mm [0.394 in.] width

Connector-related order codes

JAZ □ - □

※ For details, see p. 22.

Valve specification
Blank: For **T1, T2, T3, T4, T5, TA, TB, TC**
0: For **T0**

Connector specification
CP : Connector, lead wire length 300 mm [11.8 in.]
CP3 : Connector, lead wire length 3000 mm [118 in.]
CPN : Connector without lead wire (short bar and contacts included)
PA : Positive common A type, lead wire length 300 mm [11.8 in.] ※
PA3 : Positive common A type, lead wire length 3000 mm [118 in.] ※
PB : Positive common B type, lead wire length 300 mm [11.8 in.] ※
PB3 : Positive common B type, lead wire length 3000 mm [118 in.] ※
PC : Positive common C type, lead wire length 300 mm [11.8 in.] ※
PC3 : Positive common C type, lead wire length 3000 mm [118 in.] ※

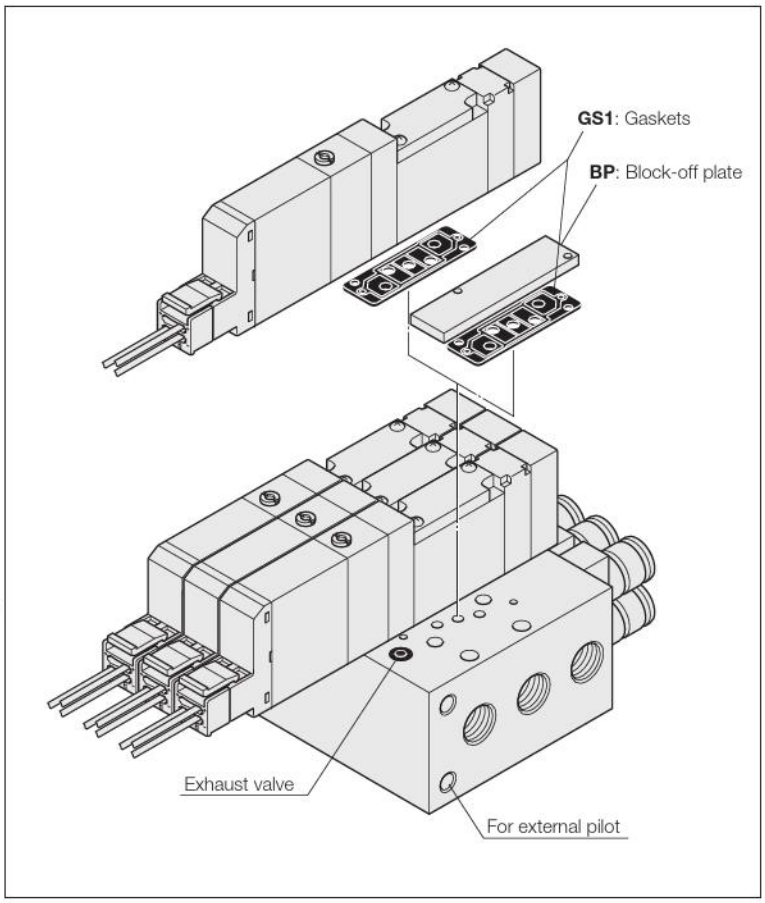

FZ - □

Valve specification
For **T1, T2, T3, T4, T5, TA, TB, TC**

Connector specification
CC1.5 : Cabtyre cable length 1500 mm [59 in.] ※
CC3 : Cabtyre cable length 3000 mm [118 in.] ※

● Common connector assembly

A type: JAZ-PA□※

Red Common wire (+)
Black A side (–)
White B side (–) (Insert when using as double solenoid) Note

B type: JAZ-PB□※

Red Common wire (+)
Black A side (–)
White B side (–) (Insert when using as double solenoid) Note

C type: JAZ-PC□※

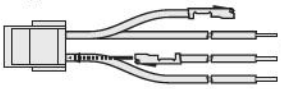

Red Common wire (+)
Black A side (–)
White B side (–) (Insert when using as double solenoid) Note
Red Common wire (+)

※ Lead wire length **Blank:** 300 mm [11.8 in.]
3: 3000 mm [118 in.]

Note: White lead wire is not available for **JAZ0-P□□**.

Remark: Connector for negative common type also available. For details, see p.22.

Back pressure prevention valve
(for monoblock type, 2 pieces)

F10Z - E1

Valve size
10: 10 mm [0.394 in.] width

Individual air supply and exhaust spacer
(Spacer for non-plug-in type, gasket, exhaust valve, and 2 mounting screws)

F10Z - □

Valve size
10: 10 mm [0.394 in.] width

Specification
NPM: Individual air supply spacer (with M5 female thread for F10)
NRM: Individual exhaust spacer (with M5 female thread for F10)

※ For details, see p. 27.
※ Not available with DIN connectors (-39□).

Manifold Order Code Example
(6 units of F10 Series)

F10M6AL

stn.1 ~ 2	**F10T0-A1-PS-J5 DC24V**
stn.3 ~ 5	**F10T2-A1-PS-J6 DC24V**
stn.6	**F10BP-J6**

Note: This order code example has no relationship to the illustration at upper right.

Muffler

KM - J □

Fitting size
6: Outer diameter ϕ 6 (for individual exhaust spacer)
8: Outer diameter ϕ 8 (for individual exhaust spacer)
(Sales unit: Set of 10 mufflers)

Precautions for Order Codes

● **Manifold outlet specification**
Select from among "dual use fitting blocks", "with female thread blocks" or "with selectable fittings." For repair or replacement, purchase the single valve unit additional parts, **F □ Z-J** (dual use fitting block), **F □ Z-J □** (single use fitting block), or **F □ Z-M □** (female thread block), on p. 67.

● **Orders for valves only**
Place orders from "Single Valve Unit Order Codes" on p. 66. Note, however, that the only available valve outlet type is A1. In addition, for common terminal wiring connections, order the common connector assemblies listed above separately.

Connector-related order codes

JAZ - P - □ (for double use only)

Valve specification
For **T2, T3, T4, T5, TA, TB,** or **TC**

Connector specification

CP : Connector, lead wire length 300 mm [11.8 in.] (black, red, white, for total of 3 lead wires)
CP3 : Connector, lead wire length 3000 mm [118 in.] (black, red, white, for total of 3 lead wires)
PA : Positive common A type, lead wire length 300 mm [11.8 in.]※
PA3 : Positive common A type, lead wire length 3000 mm [118 in.]※
PB : Positive common B type, lead wire length 300 mm [11.8 in.]※
PB3 : Positive common B type, lead wire length 3000 mm [118 in.]※
PC : Positive common C type, lead wire length 300 mm [11.8 in.]※
PC3 : Positive common C type, lead wire length 3000 mm [118 in.]※
※A common connector assembly.

JAZ0 - P - □ (for single use only)

Valve specification
For **T0/T1**

Connector specification

CP : Connector, lead wire length 300 mm [11.8 in.] (black, red, for total of 2 lead wires)
CP3 : Connector, lead wire length 3000 mm [118 in.] (black, red, for total of 2 lead wires)
PA : Positive common A type, lead wire length 300 mm [11.8 in.]※
PA3 : Positive common A type, lead wire length 3000 mm [118 in.]※
PB : Positive common B type, lead wire length 300 mm [11.8 in.]※
PB3 : Positive common B type, lead wire length 3000 mm [118 in.]※
PC : Positive common C type, lead wire length 300 mm [11.8 in.] ※
PC3 : Positive common C type, lead wire length 3000 mm [118 in.]※
※A common connector assembly.

Notes:
1. When the valve specification is **T1**, select the **JAZ0-P-** □ single dedicated type.
2. When switching between the single and double type (**T1**/**T2**), purchase and use a dedicated connector for single or double use (the number of seal holes in the lead wire differs for the single and double type).
3. There is no white lead wire for the **JAZ0-P-** □ .
4. It is necessary to disassemble the connector to add a common connector assembly. Contact your nearest KOGANEI sales office.
5. For information on use in locations/atmospheres subject to substances other than water, such as organic solvents, cutting oil, or reagents, contact your nearest KOGANEI sales office.
6. For information on replacing the waterproof seal, contact your nearest KOGANEI sales office.

F10 Series Monoblock Manifold F Type (Direct Piping Type) Order Codes

Valve size

F10M

10 mm [0.394 in.] width

Valve specification

T0 : 2-position, for single solenoid only
T1 : 2-position, single solenoid specification
T2 : 2-position, double solenoid specification
T3 : 3-position, closed center
T4 : 3-position, exhaust center
T5 : 3-position, pressure center
TA : Tandem 3-port (NC and NC)
TB : Tandem 3-port (NO and NO)
TC : Tandem 3-port (NC and NO)

Manual override

Manual override button

No protrusion with DIN connector

Manual override lever[Note2]

Protruding locking type[Note9]

Valve outlet type

5-port specification

-FJ	With dual use fitting block (direct piping type)	F10: φ4, φ6
-FJ5	With single use fitting block (direct piping type)	F10: φ4
-FJ6	With single use fitting block (direct piping type)	F10: φ6
-FM	With female thread block (direct piping type)	F10: M5×0.8
-FMH	With female thread block[Note12] (direct piping type)	F10: 10-32UNF

3-port specification

-FJ5A	With single use fitting block, normally closed (NC) (direct piping type)	F10: φ4
-FJ5B	With single use fitting block, normally open (NO) (direct piping type)	F10: φ4
-FJ6A	With single use fitting block, normally closed (NC) (direct piping type)	F10: φ6
-FJ6B	With single use fitting block, normally open (NO) (direct piping type)	F10: φ6
-FMA	With female thread block, normally closed (NC) (direct piping type)	F10: M5×0.8
-FMAH	With female thread block, normally closed (NC)[Note9] (direct piping type)	F10: 10-32UNF
-FMB	With female thread block, normally open (NO)[Note6] (direct piping type)	F10: M5×0.8
-FMBH	With female thread block, normally open (NO)[Note9] (direct piping type)	F10: 10-32UNF

Caution: The 3-port specifications are only available in the valve specification **T0**, **T1**, and **T2**.

Wiring specification[Note6]

L type plug connector
Without connector

S type plug connector
Lead wire 3000 mm [118 in.]

Pre-wired positive common terminal
S type plug connector
Lead wire 3000 mm [118 in.]

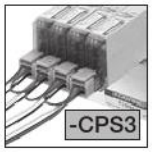

S type plug connector
Without connector

L type plug connector
Lead wire 3000 mm [118 in.]

Pre-wired positive common terminal
L type plug connector
Lead wire 3000 mm [118 in.]

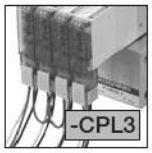

S type plug connector
Lead wire 300 mm [11.8 in.]

Pre-wired positive common terminal
S type plug connector
Lead wire 300 mm [11.8 in.]

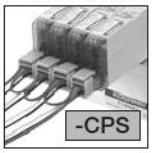

DIN connector type with indicator[Note10]

L type plug connector
Lead wire 300 mm [11.8 in.]

Pre-wired positive common terminal
L type plug connector
Lead wire 300 mm [11.8 in.]

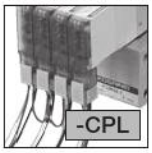

DIN connector type without connector[Note10]

-39N

Individual air supply and exhaust spacer, stop valve

Blank : No spacer and no stop valve
-NPM : Individual air supply spacer (with M5 female thread for F10)
-NRM : Individual exhaust spacer (with M5 female thread for F10)
-STP : With stop valve

For details, see p. 26.

Valve size

F10	Standard type
F10L	Low-current type

Back pressure prevention valve

Blank	No back pressure prevention valve
-E1	With back pressure prevention valve[Note3]

Valve size	Valve units	Manifold type	Station	Valve size	Valve specification	IP specification	Manual override	Valve outlet type	Wiring specification	Back pressure prevention valve	Individual air supply and exhaust spacer, stop valve	Voltage
Manifold model					Mounting valve model							
F10M	2 ⋮ 20	F (※Rc) FH (※NPT)	stn. 1 ⋮ stn.□ Note1	F10 F10L	T0 T1 T2 T3 T4 T5 TA TB TC	Blank -P[Note7]	Blank -R[Note2] -83[Note9]	-FJ[Note11] -FJ5[Note11] -FJ6[Note11] -FM[Note11] -FMH[Note12] -FJ5A[Note11] -FJ5B[Note11] -FJ6A[Note11] -FJ6B[Note11] -FMA[Note11] -FMAH[Note9] -FMB[Note8] -FMBH[Note12]	Blank -PN -PS -PL -PS3 -PL3 -CPS -CPL -CPS3 -CPL3 -39L[Note10] -39N[Note10]	Blank -E1[Note3]	Blank -NPM -NRM -STP	DC24V DC12V[Note4] AC100V[Note5, 13] AC120V[Note5] AC240V[Note5, 9]
				F10	BP (for block-off plate)						Blank -STP	

Notes:
1. Valve mounting location is from the left, with the solenoid on top, and the 4(A), 2(B) ports side in front.
2. When the valve specification is **T1** or **T2**, the manual override lever is placed only on the A side. This is not available with **-39**□.
3. Not available with the individual exhaust spacer.
4. Not available in low-current type.
5. Not available in low-current type and tandem 3-port valves.
6. The **-P** □ (including when Blank) and **-CP** □ wiring specifications cannot be mixed.
7. The IP65 protective structure around an electrical device that prevents the infiltration of solid foreign material and water from outside.
8. 3 port type is only supported by the **T0**, **T1**, and **T2** valve type.
9. Only for wiring specification **-39** □ .
10. Not available for valve specification **T1**, **TA**, **TB**, and **TC**. In addition, the valve is used only as a double solenoid for **T2**.
11. Can be selected only when the manifold type is **F**.
12. Can be selected only when the manifold type is **FH**.
13. Not available with DIN connectors (**-39** □).

Remarks:
1. The external pilot type valve cannot be mounted on the F type manifold.
2. Negative common specifications are also available as made to order products (add **-129W** to the ends of the valve and manifold model order codes). For details, consult us.

Gasket (gasket and exhaust valve)

F10Z - GS1

Valve size
10: 10 mm [0.394 in.] width

Block-off plate (block-off plate and 2 mounting screws)

F10BP

Valve size
10: 10 mm [0.394 in.] width

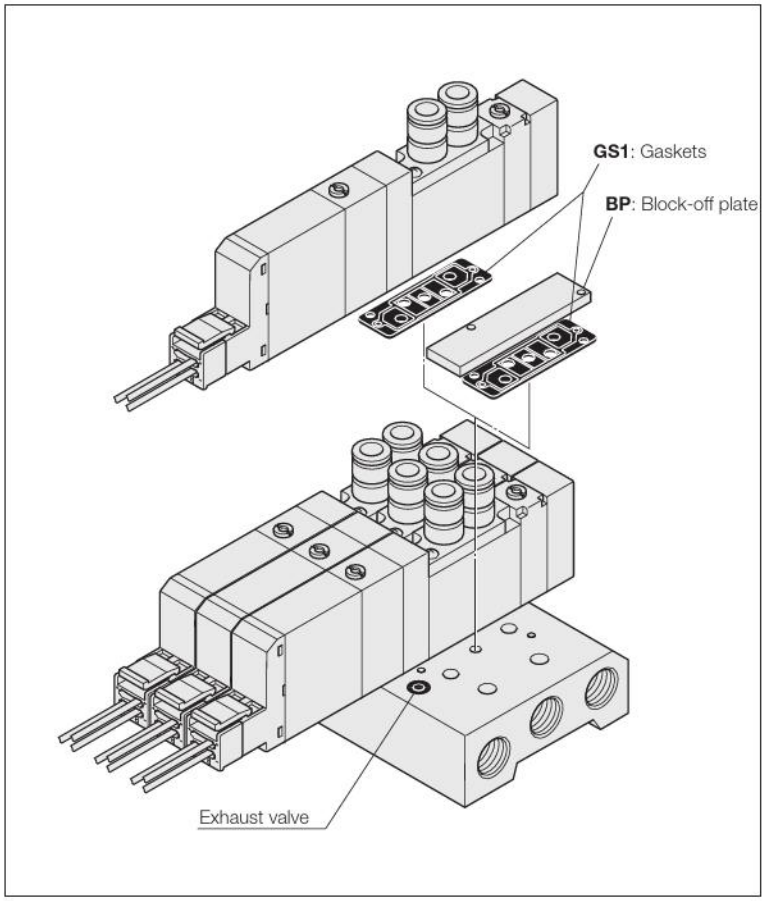

Connector-related order codes

JAZ □ - □

※ For details, see p. 22.

Valve specification
Blank: For **T1, T2, T3, T4, T5, TA, TB, TC**
0: For **T0**

Connector specification
CP : Connector, lead wire length 300 mm [11.8 in.]
CP3 : Connector, lead wire length 3000 mm [118 in.]
CPN: Connector without lead wire (short bar, contacts included)
PA : Positive common A type, lead wire length 300 mm [11.8 in.] ※
PA3 : Positive common A type, lead wire length 3000 mm [118 in.] ※
PB : Positive common B type, lead wire length 300 mm [11.8 in.] ※
PB3 : Positive common B type, lead wire length 3000 mm [118 in.] ※
PC : Positive common C type, lead wire length 300 mm [11.8 in.] ※
PC3 : Positive common C type, lead wire length 3000 mm [118 in.] ※

FZ - □

Valve specification
For **T1, T2, T3, T4, T5, TA, TB, TC**

Connector specification
CC1.5 : Cabtyre cable length 1500 mm [59 in.] ※
CC3 : Cabtyre cable length 3000 mm [118 in.] ※

● Common connector assembly

A type: JAZ-PA□※

Red Common wire (+)
Black A side (–)
White B side (–) (Insert when using as double solenoid) Note

B type: JAZ-PB□※

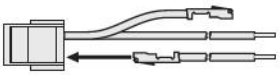

Red Common wire (+)
Black A side (–)
White B side (–) (Insert when using as double solenoid) Note

C type: JAZ-PC□※

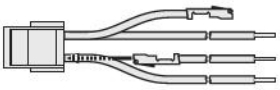

Red Common wire (+)
Black A side (–)
White B side (–) (Insert when using as double solenoid) Note
Red Common wire (+)

※ Lead wire length **Blank:** 300 mm [11.8 in.] **3:** 3000 mm [118 in.]

Note: White lead wire is not available for **JAZ0-P□□**.

Remark: Connector for negative common type also available. For details, see p. 22.

Back pressure prevention valve
(for monoblock type, 2 pieces)

F10Z - E1

Valve size
10: 10 mm [0.394 in.] width

Individual air supply and exhaust spacer

(Spacer for non-plug-in type, gasket, exhaust valve, and 2 mounting screws)

F10Z - □

Valve size
10: 10 mm [0.394 in.] width

Specification
NPM: Individual air supply spacer (with M5 female thread for F10)
NRM: Individual exhaust spacer (with M5 female thread for F10)

※ For details, see p. 27.
※ Not available with DIN connectors (**-39□**).

Manifold Order Code Example
(4 units of F10 Series)

F10M4F

stn.1 ~ 2	F10T0-FJ5-PS DC24V
stn.3	F10T2-FJ6-PS DC24V
stn.4	F10BP

Note: This order code example has no relationship to the illustration at upper right.

Muffler

KM - J □

Fitting size
6: Outer diameter ϕ 6 (for individual exhaust spacer)
8: Outer diameter ϕ 8 (for individual exhaust spacer)
(Sales unit: Set of 10 mufflers)

Precautions for Order Codes

● **Orders for valves only**
Place orders from "Single Valve Unit Order Codes" on p. 66.
Select from valve outlet types **-FJ**, **-FJ5**, **-FJ6**, **-FM**, **-FJ5A**, **-FJ5B**, **-FJ6A**, **-FJ6B**, **-FMA**, or **-FMB**. In addition, for common terminal wiring connections, order the common connector assemblies listed above separately.

Connector-related order codes

JAZ - P - □ (for double use only)

Valve specification
For **T2, T3, T4, T5, TA, TB,** or **TC**

Connector specification

CP : Connector, lead wire length 300 mm [11.8 in.] (black, red, white, for total of 3 lead wires)
CP3 : Connector, lead wire length 3000 mm [118 in.] (black, red, white, for total of 3 lead wires)
PA : Positive common A type, lead wire length 300 mm [11.8 in.]※
PA3 : Positive common A type, lead wire length 3000 mm [118 in.]※
PB : Positive common B type, lead wire length 300 mm [11.8 in.]※
PB3 : Positive common B type, lead wire length 3000 mm [118 in.]※
PC : Positive common C type, lead wire length 300 mm [11.8 in.]※
PC3 : Positive common C type, lead wire length 3000 mm [118 in.]※
※A common connector assembly.

Notes:
1. When the valve specification is **T1**, select the **JAZ0-P-** □ single dedicated type.
2. When switching between the single and double type (**T1**/**T2**), purchase and use a dedicated connector for single or double use (the number of seal holes in the lead wire differs for the single and double type).
3. There is no white lead wire for the **JAZ0-P-** □ .
4. It is necessary to disassemble the connector to add a common connector assembly. Contact your nearest KOGANEI sales office.
5. For information on use in locations/atmospheres subject to substances other than water, such as organic solvents, cutting oil, or reagents, contact your nearest KOGANEI sales office.
6. For information on replacing the waterproof seal, contact your nearest KOGANEI sales office.

JAZ0 - P - □ (for single use only)

Valve specification
For **T0/T1**

Connector specification

CP : Connector, lead wire length 300 mm [11.8 in.] (black, red, for total of 2 lead wires)
CP3 : Connector, lead wire length 3000 mm [118 in.] (black, red, for total of 2 lead wires)
PA : Positive common A type, lead wire length 300 mm [11.8 in.]※
PA3 : Positive common A type, lead wire length 3000 mm [118 in.]※
PB : Positive common B type, lead wire length 300 mm [11.8 in.]※
PB3 : Positive common B type, lead wire length 3000 mm [118 in.]※
PC : Positive common C type, lead wire length 300 mm [11.8 in.] ※
PC3 : Positive common C type, lead wire length 3000 mm [118 in.]※
※A common connector assembly.

F10 Series Monoblock Manifold A Type, Wire-Saving Type (Base Piping Type) Order Codes

Valve size

F10M 10 mm [0.394 in.] width

Manifold outlet specification

With dual use fitting blocks (base piping type)

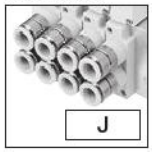

J

Outlet port fitting
F10: ϕ4, ϕ6

With selectable fittings (base piping type)

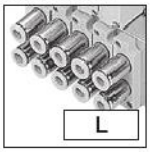

L

Outlet port should be selected in accordance with the manifold fitting specification.

With female thread blocks (base piping type)

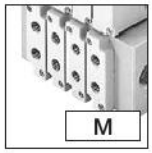

M

Outlet port female thread
F10: M5 × 0.8

Operation type

Blank
Internal pilot type[Note5]

G
External pilot type[Note6] (for positive pressure)

V
External pilot type[Note6] (for vacuum) ※
※ : This is a vacuum valve.

Note: Cannot be mounted together with a positive pressure valve.

Manual override

Manual override button

Blank

Manual override lever[Note3]

-R

Valve outlet type

With plate[Note4] (base piping type)

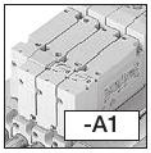

-A1

Individual air supply and exhaust spacer, stop valve

Blank: No spacer and no stop valve
-NPM: Individual air supply spacer (with M5 female thread for F10)
-NRM: Individual exhaust spacer (with M5 female thread for F10)
-STP : With stop valve[Note5]
For details, see p. 26.

Wiring specification

-PN
S type plug connector[Note4]

Manifold fitting specification

5-port specification

-J5	With single use fitting block (base piping type)	**F10:** ϕ4
-J6	With single use fitting block (base piping type)	**F10:** ϕ6
-M	With female thread block (base piping type)	**F10:** M5 × 0.8
-MH	With female Thread block[Note15] (base piping type)	**F10:** 10-32UNF

3-port specification

-J5A	With single use fitting block, normally closed (NC) (base piping type)	**F10:** ϕ4
-J5B	With single use fitting block, normally open (NO) (base piping type)	**F10:** ϕ4
-J6A	With single use fitting block,normally closed (NC) (base piping type)	**F10:** ϕ6
-J6B	With single use fitting block, normally open (NO) (base piping type)	**F10:** ϕ6
-MA	With female thread block, normally closed (NC) (base piping type)	**F10:** M5 × 0.8
-MAH	With female thread block, normally closed (NC)[Note15] (base piping type)	**F10:** 10-32UNF
-MB	With female thread block,normally open (NO)[Note14] (base piping type)	**F10:** M5 × 0.8
-MBH	With female thread block, normally open (NO)[Note15] (base piping type)	**F10:** 10-32UNF

Caution: The 3-port specifications are only available in the valve specification **T0**, **T1**, and **T2**.

Valve specification

T0 : 2-position, for single solenoid only
T1 : 2-position, single solenoid specification
T2 : 2-position, double solenoid specification
T3 : 3-position, closed center
T4 : 3-position, exhaust center[Note8]
T5 : 3-position, pressure center[Note8]
TA : Tandem 3-port (NC and NC)[Note9]
TB : Tandem 3-port (NO and NO)[Note9]
TC : Tandem 3-port (NC and NO)[Note9]

Wiring specifications (wiring block)

(no power supply terminal only)

Flat cable connector (with socket and strain relief)

-F□

-F100N: 10-pin
-F101N: 10-pin
-F200N: 20-pin
-F201N: 20-pin
-F260N: 26-pin
For derails, see p. 47.

D-sub connector

-D25□

(M2.6 mounting screws)
-D250N: 25-pin[Note14]
-D251N: 25-pin[Note14]

(4-40UNC mounting screws)
-D250NU: 25-pin[Note15]
-D251NU: 25-pin[Note15]
For derails, see p. 47.

Valve size

F10 Standard type

F10L Low-current type

Wiring connection specification

Blank
Packed wiring: Wired to match the specifications of the mounted valve.

-W
Double wiring: Wiring is always for the double solenoid, regardless of the specifications of the mounted valve.

Pilot specification

Blank Internal pilot manifold

G External pilot manifold

Back pressure prevention valve

Blank No back pressure prevention valve

-E1 With back pressure prevention valve[Note10]

Valve size	Valve units	Manifold type	Manifold outlet specification	Pilot specification	Wiring specifications	Wiring connection specification	Station	Valve size	Valve specification	Operation type	Manual override	Valve outlet type	Wiring specification	Manifold fitting specification	Back pressure prevention valve	Individual air supply and exhaust spacer, stop valve	Voltage
Manifold model							Mounting valve model										
F10M	2 ⋮ □ Note1	A (※Rc)	J M	Blank G	-F100N -F101N -F200N -F201N -F260N -D250N -D251N	Blank -W	stn. 1 ⋮ stn.□ Note2	F10 F10L	T0 T1 T2 T3 T4[Note8] T5[Note8] TA[Note9] TB[Note9] TC[Note9]	Blank[Note5] G[Note6] V[Note6]	Blank -R[Note3]	-A1 Note4	-PN Note4		Blank -E1[Note10]	Blank -NPM -NRM -STP[Note5]	DC24V DC12V[Note11] AC100V[Note12] AC120V[Note12]
								F10	BP (for block-off plate)[Note7]							Blank -STP[Note5]	
F10M	2 ⋮ □ Note1	A (※Rc) AH (※NPT)	L	Blank G	-F100N -F101N -F200N -F201N -F260N -D250N[Note14] -D251N[Note14] -D250NU[Note15] -D251NU[Note15]	Blank -W	stn. 1 ⋮ stn.□ Note2	F10 F10L	T0 T1 T2 T3 T4[Note8] T5[Note8] TA[Note9] TB[Note9] TC[Note9]	Blank[Note5] G[Note6] V[Note6]	Blank -R[Note3]	-A1 Note4	-PN Note4	-J5[Note14] -J6[Note14] -M[Note14] -MH[Note15] -J5A[Note14] -J5B[Note14] -J6A[Note14] -J6B[Note14] -MA[Note14] -MAH[Note15] -MB[Note14] -MBH[Note15]	Blank -E1[Note10]	Blank -NPM -NRM -STP[Note5]	DC24V DC12V[Note11] AC100V[Note12] AC120V[Note12]
								F10	BP (for block-off plate)[Note7]							Blank -STP[Note5]	

Notes:
1. For the maximum number of units, see the table for maximum number of valve units by wiring specification, on p. 77.
2. Valve mounting location is from the left, with the solenoid on top, and the 4(A), 2(B) ports side in front.
3. When the valve specification is **T1** or **T2**, the manual override lever is placed only on the A side.
4. Always enter **-A1** and **-PN**.
5. Cannot be mounted on the external pilot manifold.
6. Cannot be mounted on the internal pilot manifold.
7. Caution should be exercised that the block-off plate wiring is always double wiring (allocated 2 control pins at 1 stn.), regardless of the wiring connection specification. For single wiring, see p. 77.
8. Not available in the vacuum valves.
9. Not available in external pilot type and vacuum valves.
10. Not available with the individual exhaust spacer and vacuum valve.
11. Not available in low-current type.
12. Not available in low-current type and tandem 3-port valves. In addition, only available when the wiring specification is a D-sub connector.
13. 3 port type is only supported by the **T0**, **T1**, and **T2** valve type.
14. Can be selected only when the manifold type is **A**.
15. Can be selected only when the manifold type is **AH**.

Gasket (gasket and exhaust valve)

F10Z - GS1

Valve size
10: 10 mm [0.394 in.] width

Block-off plate (block-off plate and 2 mounting screws)

F10BP

Valve size
10: 10 mm [0.394 in.] width

Back pressure prevention valve
(for monoblock type, 2 pieces)

F10Z - E1

Valve size
10: 10 mm [0.394 in.] width

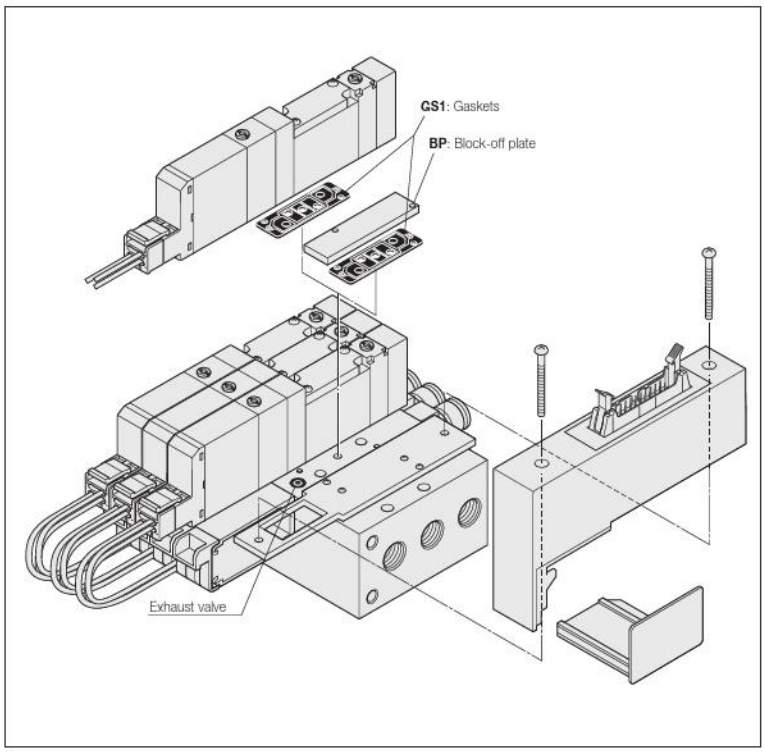

Individual air supply and exhaust spacer
(Spacer for non-plug-in type, gasket, exhaust valve, and 2 mounting screws)

F10Z - □

Valve size
10: 10 mm [0.394 in.] width

Specification
NPM: Individual air supply spacer (with M5 female thread for F10)
NRM: Individual exhaust spacer (with M5 female thread for F10)

※ For details, see p. 27.

Muffler

KM - J□

Fitting size
6: Outer diameter ϕ6 (for individual exhaust spacer)
8: Outer diameter ϕ8 (for individual exhaust spacer)
(Sales unit: Set of 10 mufflers)

Manifold Order Code Example
(6 units of F10 Series)

F10M6AL-F201N

stn.1 ~ 2 F10T0-A1-PN-J5 DC24V
stn.3 ~ 5 F10T2-A1-PN-J6 DC24V
stn.6 F10BP-J6

Note: This order code example has no relationship to the illustration at upper right.

■ Table for maximum number of valve units by wiring specification

Wiring specification	Max. outputs	Maximum number of units: Wiring connection specification: Packed wiring (Blank)	Maximum number of units: Wiring connection specification: Double wiring (-W)
F100N Flat cable (10P)	8	Varies depending on the number of mounted single solenoids, double solenoids, and block-off plates. The number of controlled solenoids should be designated as the maximum number of outputs or less.	4 units
F101N Flat cable (10P)	8		4 units
F200N Flat cable (20P)	16		8 units
F201N Flat cable (20P)	16		8 units
F260N Flat cable (26P)	20		10 units
D250N D-sub connector (25P)	16		8 units
D251N D-sub connector (25P)	20		10 units

Precautions for Order Codes

- **Manifold outlet specification**
  Select from among "dual use fitting blocks", "with female thread blocks" or "with selectable fittings." For repair or replacement, purchase the single valve unit additional parts, **F □ Z-J** (dual use fitting block), **F □ Z-J □** (single use fitting block), or **F □ Z-M □** (female thread block), on p. 67.
- **Orders for valves only**
  Place orders from "Single Valve Unit Order Codes" on p. 66. Note, however, that the only available valve outlet type is **A1**.
- **Wiring connection specification**
  Blank (packed wiring): Wired to match the specifications of the mounted valve.
  -W (double wiring): Wiring is always for the double solenoid, regardless of the specifications of the mounted valve.

Caution

Caution should be exercised that the block-off plate wiring is always double wiring (allocated 2 control pins at 1 stn.), regardless of the wiring connection specification.
The block-off plate wiring can be made as wiring for a single solenoid. Add **-1W** to the end of the block-off plate order code in the case.
For details, consult us.

F10 Series Monoblock Manifold F Type, Wire-Saving Type (Direct Piping Type) Order Codes

■ Valve size

F10M

10 mm [0.394 in.] width

■ Valve specification

T0 : 2-position, for single solenoid only
T1 : 2-position, single solenoid specification
T2 : 2-position, double solenoid specification
T3 : 3-position, closed center
T4 : 3-position, exhaust center
T5 : 3-position, pressure center
TA : Tandem 3-port (NC and NC)
TB : Tandem 3-port (NO and NO)
TC : Tandem 3-port (NC and NO)

■ Manual override

Manual override button

Manual override lever[Note3]

■ Valve outlet type

5-port specification

-FJ	With dual use fitting block (direct piping type)	**F10:** ϕ4, ϕ6
-FJ5	With single use fitting block (direct piping type)	**F10:** ϕ4
-FJ6	With single use fitting block (direct piping type)	**F10:** ϕ6
-FM	With female thread block (direct piping type)	**F10:** M5 × 0.8
-FMH	With female thread block[Note10] (direct piping type)	**F10:** 10-32UNF

3-port specification

-FJ5A	With single use fitting block, normally closed (NC) (direct piping type)	**F10:** ϕ4
-FJ5B	With single use fitting block, normally open (NO) (direct piping type)	**F10:** ϕ4
-FJ6A	With single use fitting block, normally closed (NC) (direct piping type)	**F10:** ϕ6
-FJ6B	With single use fitting block, normally open (NO) (direct piping type)	**F10:** ϕ6
-FMA	With female thread block, normally closed (NC) (direct piping type)	**F10:** M5 × 0.8
-FMAH	With female thread block, normally closed (NC)[Note11] (direct piping type)	**F10:** 10-32UNF
-FMB	With female thread block, normally open (NO) (direct piping type)	**F10:** M5 × 0.8
-FMBH	With female thread block, normally open (NO)[Note11] (direct piping type)	**F10:** 10-32UNF

Caution: The 3-port specifications are only available in the valve specification **T0**, **T1**, and **T2**.

■ Wiring specification (wiring block)

(no power supply terminal only)

Flat cable connector (with socket and strain relief)

-F100N: 10-pin
-F101N: 10-pin
-F200N: 20-pin
-F201N: 20-pin
-F260N: 26-pin
For derails, see p. 47.

D-sub connector

(M2.6 mounting screws)
-D250N: 25-pin
-D251N: 25-pin

(4-40UNC mounting screws)
-D250NU: 25-pin
-D251NU: 25-pin
For derails, see p. 47.

■ Wiring connection specification

Blank

Packed wiring: Wired to match the specifications of the mounted valve.

-W

Double wiring: Wiring is always for the double solenoid, regardless of the specifications of the mounted valve.

■ Valve size

F10 Standard type

F10L Low-current type

■ Individual air supply and exhaust spacer, stop valve

Blank : No spacer and no stop valve
-NPM : Individual air supply spacer (with M5 female thread for F10)
-NRM : Individual exhaust spacer (with M5 female thread for F10)
-STP : With stop valve
For details, see p. 26.

■ Back pressure prevention valve

Blank No back pressure prevention valve

-E1 With back pressure prevention valve[Note6]

■ Wiring specification

-PN

S type plug connector[Note4]

Valve size	Valve units	Manifold type	Wiring specification	Wiring connection specification	Station	Valve size	Valve specification	Manual override	Valve outlet type	Wiring specification	Back pressure prevention valve	Individual air supply and exhaust spacer, stop valve	Voltage
Manifold model					Mounting valve model								
F10M	2 ⋮ □ Note1	F (※Rc) FH (※NPT)	-F100N -F101N -F200N -F201N -F260N -D250N[Note10] -D251N[Note10] -D250NU[Note11] -D251NU[Note11]	Blank -W	stn. 1 ⋮ stn.□ Note2	F10 F10L	T0 T1 T2 T3 T4 T5 TA TB TC	Blank -R[Note3]	Note9 -FJ -FJ5 -FJ6 -FM -FJ5A -FJ5B -FJ6A -FJ6B -FMA -FMB	-PN Note4	Blank -E1[Note6]	Blank -NPM -NRM -STP	DC24V DC12V[Note7] AC100V[Note8] AC120V[Note8]
						F10	BP (for block-off plate)[Note5]					Blank -STP	

Notes: 1. For the maximum number of units, see the table for maximum number of valve units by wiring specification, on p. 79.
2. Valve mounting location is from the left, with the solenoid on top, and the 4(A), 2(B) ports side in front.
3. When the valve specification is **T1** or **T2**, the manual override lever is placed only on the A side.
4. Always enter **-PN**.
5. Caution should be exercised that the block-off plate wiring is always double wiring (allocated 2 control pins at 1 stn.), regardless of the wiring connection specification. For single wiring, see p. 79.
6. Not available with the individual exhaust spacer.
7. Not available in low-current type.
8. Not available in low-current type and tandem 3-port valves. In addition, only available when the wiring specification is a D-sub connector.
9. 3 port type is only supported by the **T0**, **T1**, and **T2** valve type.
10. Can be selected only when the manifold type is **F**.
11. Can be selected only when the manifold type is **FH**.

Remark: The external pilot type valve cannot be mounted on the F type manifold.

Gasket (gasket and exhaust valve)

F10Z - GS1

Valve size
10: 10 mm [0.394 in.] width

Block-off plate (block-off plate and 2 mounting screws)

F10BP

Valve size
10: 10 mm [0.394 in.] width

Back pressure prevention valve
(for monoblock type, 2 pieces)

F10Z - E1

Valve size
10: 10 mm [0.394 in.] width

Individual air supply and exhaust spacer
(Spacer for non-plug-in type, gasket, exhaust valve, and 2 mounting screws)

F10Z - □

Valve size
10: 10 mm [0.394 in.] width

Specification
NPM: Individual air supply spacer (with M5 female thread for F10)
NRM: Individual exhaust spacer (with M5 female thread for F10)

※ For details, see p. 27.

Muffler

KM - J□

Fitting size
6: Outer diameter ϕ6 (for individual exhaust spacer)
8: Outer diameter ϕ8 (for individual exhaust spacer)
(Sales unit: Set of 10 mufflers)

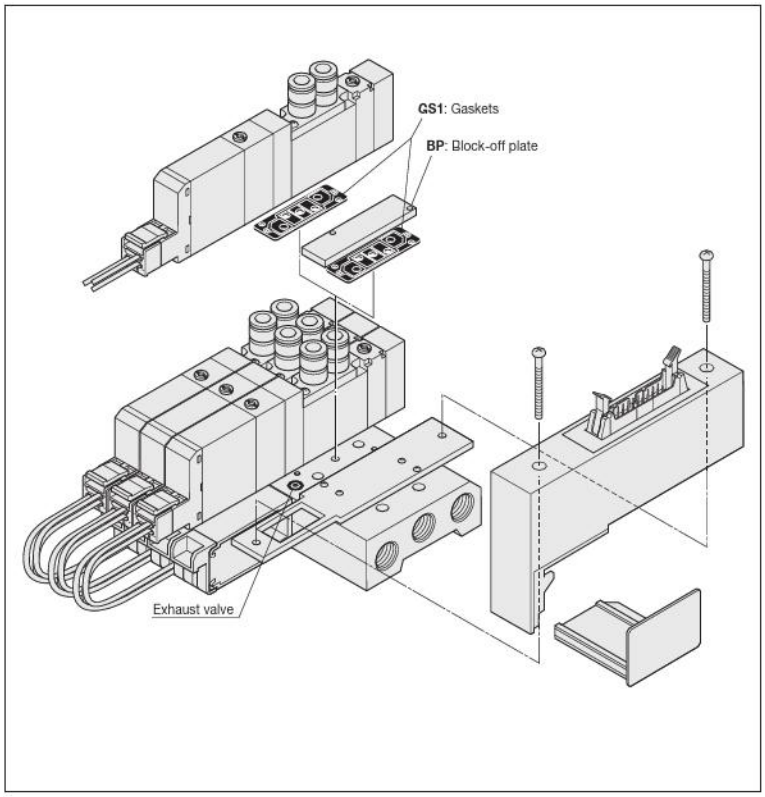

Manifold Order Code Example
(4 units of F10 Series)

F10M4F-F201

stn.1～2	F10T0-FJ5-PN DC24V
stn.3	F10T2-FJ6-PN DC24V
stn.4	F10BP

Note: This order code example has no relationship to the illustration at upper right.

■ Table for maximum number of valve units by wiring specification

		Maximum number of units	
		Wiring connection specification	
Wiring specification	Max. outputs	Packed wiring (**Blank**)	Double wiring (**-W**)
F100N Flat cable (10P)	8	Varies depending on the number of mounted single solenoids, double solenoids, and block-off plates. The number of controlled solenoids should be designated as the maximum number of outputs or less.	4 units
F101N Flat cable (10P)	8		4 units
F200N Flat cable (20P)	16		8 units
F201N Flat cable (20P)	16		8 units
F260N Flat cable (26P)	20		10 units
D250N D-sub connector (25P)	16		8 units
D251N D-sub connector (25P)	20		10 units

Precautions for Order Codes

- **Orders for valves only**
  Place orders from "Single Valve Unit Order Codes" on p. 66.
  Select from valve outlet types **-FJ**, **-FJ5**, **-FJ6**, **-FM□**, **-FJ5A**, **-FJ5B**, **-FJ6A**, **-FJ6B**, **-FMA□**, or **-FMB□**.
- **Wiring connection specification**
  Blank (packed wiring): Wired to match the specifications of the mounted valve.
  -W (double wiring): Wiring is always for the double solenoid, regardless of the specifications of the mounted valve.

Caution

Caution should be exercised that the block-off plate wiring is always double wiring (allocated 2 control pins at 1 stn.), regardless of the wiring connection specification.
The block-off plate wiring can be made as wiring for a single solenoid. Add **-1W** to the end of the block-off plate order code in the case.
For details, consult us.

F10 Series PC Board Manifold A Type (Base Piping Type) Order Codes

■ **Valve size**

F10M

10 mm [0.394 in.] width

■ **Manifold outlet specification**

With dual use fitting blocks (base piping type)

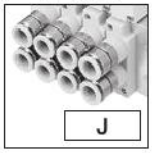

Outlet port fitting
F10: ϕ4, ϕ6

With female thread blocks (base piping type)

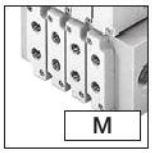

Outlet port female thread
F10: M5 × 0.8

With selectable fittings (base piping type)

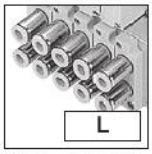

Outlet port should be selected in accordance with the manifold fitting specification.

■ **Pilot specification**

Blank

Internal pilot manifold

G

External pilot manifold

■ **Wiring specification (wiring block)**

Flat cable connector (with socket and strain relief)

-F200: 20-pin
-F201: 20-pin
For details, see p. 45.

■ **Wiring connection specification**

-S

Single wiring Note1

-W

Double wiring Note2

	Valve size	Valve units		Manifold outlet specification	Pilot specification	Wiring specification	Wiring connection specification
	Manifold model						
Single wiring typeNote1	F10M	6 8 10 12 14 16 Note3	AP	J M	Blank G	-F200 -F201	-S
				L	Blank G	-F200 -F201	-S
Double wiring typeNote2		6 8 Note3	AP	J M	Blank G	-F200 -F201	-W
				L	Blank G	-F200 -F201	-W

Notes: 1. Wiring is for the single solenoid only. Note that this is not the same as packed wiring. The mounting valves are limited to single solenoid only (**T0, T1** specifications). Therefore, even if the **T1** specification valve is switched over to a double solenoid, no power will be applied to the B side solenoid.
2. Wiring is always for the double solenoid, regardless of the specifications of the mounted valves.
3. In terms of wiring connection specifications, the number of units for single wiring is 6-16 (even numbers only) and for double wiring is 6 or 8.

Valve specification

T0 : 2-position, for single solenoid only
T1 : 2-position, single solenoid specification
T2 : 2-position, double solenoid specification
T3 : 3-position, closed center
T4 : 3-position, exhaust center[Note9]
T5 : 3-position, pressure center[Note9]
TA : Tandem 3-port (NC and NC)[Note10]
TB : Tandem 3-port (NO and NO)[Note10]
TC : Tandem 3-port (NC and NO)[Note10]

Manual override

Manual override button

Manual override lever[Note7]

Valve outlet type

With plate[Note8] (base piping type)

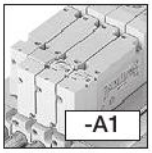

Manifold fitting specification

5-port specification

-J5	With single use fitting block (base piping type)	F10: ϕ4
-J6	With single use fitting block (base piping type)	F10: ϕ6
-M	With female thread block (base piping type)	F10: M5×0.8

3-port specification

-J5A	With single use fitting block, normally closed (NC) (base piping type)	F10: ϕ4
-J5B	With single use fitting block, normally open (NO) (base piping type)	F10: ϕ4
-J6A	With single use fitting block, normally closed (NC) (base piping type)	F10: ϕ6
-J6B	With single use fitting block, normally open (NO) (base piping type)	F10: ϕ6
-MA	With female thread block, normally closed (NC) (base piping type)	F10: M5×0.8
-MB	With female thread block, normally open (NO) (base piping type)	F10: M5×0.8

Caution: The 3-port specification is only available in the valve specification T0, T1, and T2.

Wiring specification

S type plug connector
Lead wire for PC board[Note8]

Valve size

F10	Standard type
F10L	Low-current type

Operation type

Blank
Internal pilot type[Note5]

G
External pilot type[Note6] (for positive pressure)

V
External pilot type[Note6] (for vacuum) ※
※ : This is a vacuum valve.

Note: Cannot be mounted together with a valve for positive pressure.

Back pressure prevention valve

Blank	No back pressure prevention valve
-E1	With back pressure prevention valve[Note12]

Individual air supply and exhaust spacer, stop valve

Blank : No spacer and no stop valve
-NPM : Individual air supply spacer (with M5 female thread for F10)
-NRM : Individual exhaust spacer (with M5 female thread for F10)
-STP : With stop valve[Note5]
For details, see p. 26.

Station	Valve size	Valve specification	Operation type	Manual override	Valve outlet type	Wiring specification	Manifold fitting specification	Back pressure prevention valve	Individual air supply and exhaust spacer, stop valve	Voltage
Mounting valve model										
stn. 1 : stn.□ Note4	F10 F10L	T0 T1 Note1	Blank[Note5] G[Note6] V[Note6]	Blank -R[Note7]	-A1 Note8	-PP Note8		Blank -E1[Note12]	Blank -NPM -NRM -STP Note5	DC24V DC12V[Note13]
	F10	BPC (for block-off plate)							Blank -STP[Note5]	
stn. 1 : stn.□ Note4	F10 F10L	T0 T1 Note1	Blank[Note5] G[Note6] V[Note6]	Blank -R[Note7]	-A1 Note8	-PP Note8	-J5 -J6A -J6 -J6B -M -MA -J5A -MB -J5B Note14	Blank -E1[Note12]	Blank -NPM -NRM -STP Note5	DC24V DC12V[Note13]
	F10	BPC (for block-off plate)							Blank -STP[Note5]	
stn. 1 : stn.□ Note4	F10 F10L	T0 T3 TA[Note10] T1 T4[Note9] TB[Note10] T2 T5[Note9] TC[Note10]	Blank[Note5] G[Note6] V[Note6]	Blank -R[Note7]	-A1 Note8	-PP Note8 Note11		Blank -E1[Note12]	Blank -NPM -NRM -STP Note5	DC24V DC12V[Note13]
	F10	BPC (for block-off plate)							Blank -STP[Note5]	
stn. 1 : stn.□ Note4	F10 F10L	T0 T3 TA[Note10] T1 T4[Note9] TB[Note10] T2 T5[Note9] TC[Note10]	Blank[Note5] G[Note6] V[Note6]	Blank -R[Note7]	-A1 Note8	-PP Note8 Note11	-J5 -J6A -J6 -J6B -M -MA -J5A -MB -J5B Note14	Blank -E1[Note12]	Blank -NPM -NRM -STP Note5	DC24V DC12V[Note13]
	F10	BPC (for block-off plate)							Blank -STP[Note5]	

Notes:
4. Valve mounting location is from the left, with the solenoid on top, and the 4(A), 2(B) ports side in front.
5. Cannot be mounted on the external pilot manifold.
6. Cannot be mounted on the internal pilot manifold.
7. When the valve specification is **T1** or **T2**, the manual override lever is placed only on the A side.
8. Always enter **-A1** and **-PP**.
9. Not available in the vacuum valves.
10. Not available in external pilot type and vacuum valves.
11. The lead wire on the solenoid B side (white) is not available in valve specification **T0**.
12. Not available with the individual exhaust spacer and vacuum valve.
13. Not available in low-current type.
14. The 3-port specification is only available in the valve specification **T0**, **T1**, and **T2**.

Gasket (gasket and exhaust valve)

F10Z - GS1

Valve size
10: 10 mm [0.394 in.] width

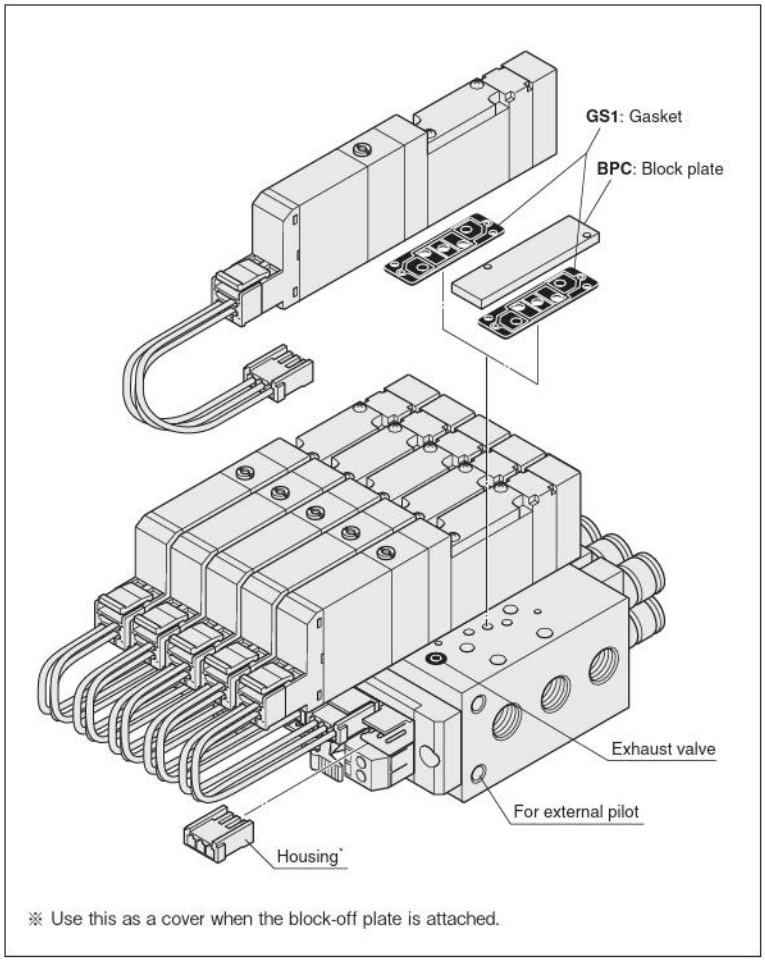

※ Use this as a cover when the block-off plate is attached.

Block-off plate
(block-off plate, 2 mounting screws, and housing)

F10BPC

Valve size
10: 10 mm [0.394 in.] width

Connector-related order codes

JAZ□ - P10

Valve specification
Blank: For **T1, T2, T3, T4, T5, TA, TB, TC**
0: For **T0**

Connector specification
P10: For F10 series
Connector lead wire for PC board manifold

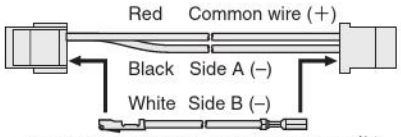

(Insert when using as a double solenoid)[Note]

Note: White lead wire is not available for **JAZ0-P□**.

Back pressure prevention valve
(for monoblock type, 2 pieces)

F10Z - E1

Valve size
10: 10 mm [0.394 in.] width

Individual air supply and exhaust spacer
(Spacer for non-plug-in type, gasket, exhaust valve, and 2 mounting screws)

F10Z - □

Valve size
10: 10 mm [0.394 in.] width

Specification
NPM: Individual air supply spacer (with M5 female thread for F10)
NRM: Individual exhaust spacer (with M5 female thread for F10)

※ For details, see p. 27.

Manifold Order Code Example
(8 units of F10 Series)

F10M8APL-F201-W

stn.1～4	**F10T0-A1-PP-J5 DC24V**
stn.5～7	**F10T2-A1-PP-J6 DC24V**
stn.8	**F10BPC-J6**

Note: This order code example has no relationship to the illustration at upper right.

Muffler

KM - J□

Fitting size
6: Outer diameter ϕ6 (for individual exhaust spacer)
8: Outer diameter ϕ8 (for individual exhaust spacer)
(Sales unit: Set of 10 mufflers)

Precautions for Order Codes

● **Orders for valves only**

Enter the code [Valve size] [Valve specification] [Pilot specification] [Manual override] - [Valve outlet type] - **PP** [Voltage] to order.

When the lead wire for the PC board is not required, enter **-PN.**

● **Wiring connection specification**
-S (single wiring): Wiring for single solenoid only.
-W (double wiring): Wiring is always for the double solenoid, regardless of the specifications of the mounted valve.

F10 Series PC Board Manifold F Type (Direct Piping Type) Order Codes

Valve size

F10M

10 mm [0.394 in.] width

Manual override

Manual override button

Manual override lever Note5

Valve outlet type

5-port specification

-FJ	With dual use fitting block (direct piping type) F10: φ4, φ6
-FJ5	With single use fitting block (direct piping type) F10: φ4
-FJ6	With single use fitting block (direct piping type) F10: φ6
-FM	With female thread block (direct piping type) F10: M5×0.8

3-port specification

-FJ5A	With single use fitting block, normally closed (NC) F10: φ4 (direct piping type)
-FJ5B	With single use fitting block, normally open (NO) F10: φ4 (direct piping type)
-FJ6A	With single use fitting block, normally closed (NC) F10: φ6 (direct piping type)
-FJ6B	With single use fitting block, normally open (NO) F10: φ6 (direct piping type)
-FMA	With female thread block, normally closed (NC) F10: M5×0.8 (direct piping type)
-FMB	With female thread block, normally open (NO) F10: M5×0.8 (direct piping type)

Caution: The 3-port specifications are only available in the valve specification **T0**, **T1**, and **T2**.

Wiring specification (wiring block)

Flat cable connector (with socket and strain relief)

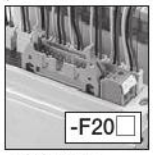

-F200: 20-pin
-F201: 20-pin
For details, see p. 45.

Wiring specification

S type plug connector
Lead wire for PC board

Individual air supply and exhaust spacer, stop valve

Blank : No spacer and no stop valve
-NPM : Individual air supply spacer (with M5 female thread for F10)
-NRM : Individual exhaust spacer (with M5 female thread for F10)
-STP : With stop valve
For details, see p. 26.

Wiring connection specification

-S	Single wiring Note1
-W	Double wiring Note2

Valve size

F10	Standard type
F10L	Low-current type

Valve specification

T0 : 2-position, for single solenoid only
T1 : 2-position, single solenoid specification
T2 : 2-position, double solenoid specification
T3 : 3-position, closed center
T4 : 3-position, exhaust center
T5 : 3-position, pressure center
TA : Tandem 3-port (NC and NC)
TB : Tandem 3-port (NO and NO)
TC : Tandem 3-port (NC and NO)

Back pressure prevention valve

Blank	No back pressure prevention valve
-E1	With back pressure prevention valve Note8

	Valve size	Valve units		Wiring specification	Wiring connection specification	Station	Valve size	Valve specification	Manual override	Valve outlet type	Wiring specification	Back pressure prevention valve	Individual air supply and exhaust spacer, stop valve	Voltage
	Manifold model					Mounting valve model								
Single wiring type Note1	F10M	6 8 10 12 14 16 Note3	FP	-F200 -F201	-S	stn. 1 ⋮ stn.□ Note4	F10 F10L	T0 T1 Note1	Blank -R Note5	Note10 -FJ -FJ5B -FJ5 -FJ6A -FJ6 -FJ6B -FM -FMA -FJ5A -FMB	-PP Note6	Blank -E1 Note8	Blank -NPM -NRM -STP	DC24V DC12V Note9
							F10	BPC (for block-off plate)					Blank -STP	
Double wiring type Note2		6 8 Note3	FP	-F200 -F201	-W	stn. 1 ⋮ stn.□ Note4	F10 F10L	T0 T3 TA T1 T4 TB T2 T5 TC	Blank -R Note5	Note10 -FJ -FJ5B -FJ5 -FJ6A -FJ6 -FJ6B -FM -FMA -FJ5A -FMB	-PP Note6 Note7	Blank -E1 Note8	Blank -NPM -NRM -STP	DC24V DC12V Note9
							F10	BPC (for block-off plate)					Blank -STP	

Notes:
1. Wiring is for the single solenoid only. Note that this is not the same as packed wiring. The mounting valves are limited to single solenoid only (**T0**, **T1** specifications). Therefore, even if the **T1** specification valve is switched over to a double solenoid, no power will be applied to the B side solenoid.
2. Wiring is always for the double solenoid, regardless of the specifications of the mounted valve.
3. In terms of wiring connection specifications, the number of units for single wiring is 6-16 (even numbers only) and for double wiring is 6 or 8.
4. Valve mounting location is from the left, with the solenoid on top, and the 4(A), 2(B) ports side in front.
5. When the valve specification is **T1** or **T2**, the manual override lever is placed only on the A side.
6. Always enter **-PP**.
7. The lead wire on the solenoid B side (white) is not available in valve specification **T0**.
8. Not available with the individual exhaust spacer.
9. Not available in low-current type.
10. The 3-port specifications are only available in the valve specification **T0**, **T1**, and **T2**.

Gasket (gasket and exhaust valve)

F10Z - GS1

Valve size
10: 10 mm [0.394 in.] width

Block-off plate
(block-off plate, 2 mounting screws, and housing)

F10BPC

Valve size
10: 10 mm [0.394 in.] width

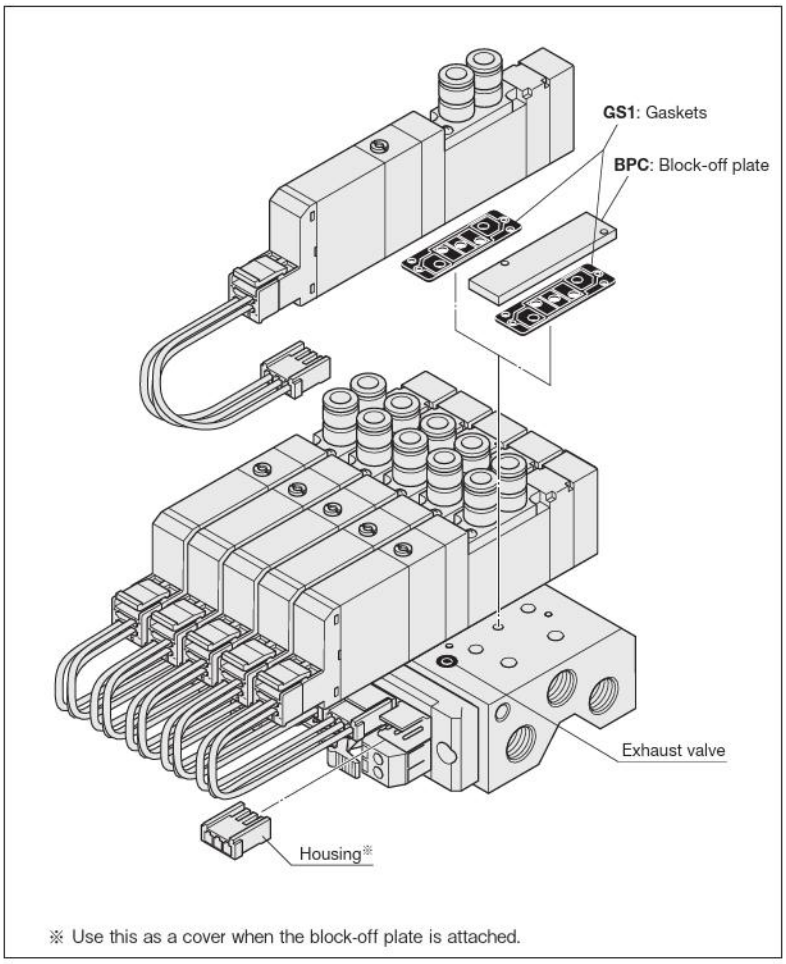

※ Use this as a cover when the block-off plate is attached.

Connector-related order code

JAZ□ -P10

Valve specification
Blank: For **T1, T2, T3, T4, T5, TA, TB, TC**
0: For **T0**

Connector specification
P10: For F10 series
Connector lead wire for PC board manifold

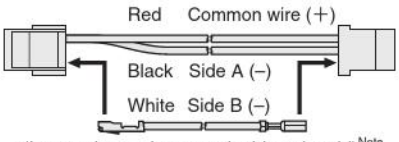

(Insert when using as a double solenoid)[Note]

Note: White lead wire is not available for **JAZ0-P□**.

Back pressure prevention valve
(for monoblock type, 2 pieces)

F10Z - E1

Valve size
10: 10 mm [0.394 in.] width

Individual air supply and exhaust spacer
(Spacer for non-plug-in type, gasket, exhaust valve, and 2 mounting screws)

F10Z - □

Valve size
10: 10 mm [0.394 in.] width

Specification
NPM: Individual air supply spacer (with M5 female thread for F10)
NRM: Individual exhaust spacer (with M5 female thread for F10)

※ For details, see p. 27.

Manifold Order Code Example
(8 units of F10 Series)

F10M8FP-F201-W

stn.1～4	**F10T0-FJ5-PP DC24V**
stn.5～7	**F10T2-FJ6-PP DC24V**
stn.8	**F10BPC**

Note: This order code example has no relationship to the illustration at upper right.

Muffler

KM - J□

Fitting size
6: Outer diameter ϕ6 (for individual exhaust spacer)
8: Outer diameter ϕ8 (for individual exhaust spacer)
(Sales unit: Set of 10 mufflers)

Precautions for Order Codes

● **Orders for valves only**

Enter the code [Valve size] [Valve specification] [Manual override] - [Valve outlet type] - **PP** [Voltage] to order.

When the lead wire for the PC board is not required, enter **-PN.**

● **Wiring connection specification**
-S (single wiring): Wiring for single solenoid only.
-W (double wiring): Wiring is always for the double solenoid, regardless of the specifications of the mounted valve.

F10 Series Split Manifold Non-Plug-in Type Order Codes

■ **Valve size**

F10M 10 mm [0.394 in.] width

■ **Manifold outlet specification**

With dual use fitting blocks (base piping type)

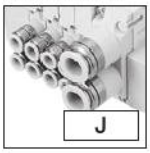

Outlet port fitting
F10: ϕ4, ϕ6

With selectable fittings (base piping type)

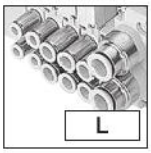

Outlet port should be selected in accordance with the manifold fitting specification.

With female thread blocks (base piping type)

Outlet port female thread
F10: M5×0.8

With plates (direct piping type)

■ **Pilot specification**

Blank
Internal pilot manifold

G
External pilot manifold

■ **Piping block specification (air supply and exhaust)**

Fitting block
-JR : Dual use fitting, right-side mounting
-JL : Dual use fitting, left-side mounting
-JD : Dual use fitting, both-side mounting
Fitting size (1(P), 3, 5(R) ports), ϕ8, ϕ10

Female thread block
-MR : Female thread, right-side mounting
-ML : Female thread, left-side mounting
-MD : Female thread, both-side mounting
Female thread size (1(P), 3, 5(R) ports), Rc1/4

Female thread block
-MRH : Female thread, right-side mounting Note15
-MLH : Female thread, left-side mounting Note15
-MDH : Female thread, both-side mounting Note15
Female thread size (1(P), 3, 5(R) ports), NPT1/4

Single use fitting block
-J5R : Single use fitting, right-side mounting
-J5L : Single use fitting, left-side mounting
-J5D : Single use fitting, both-side mounting
Fitting size (1(P), 3, 5(R) ports), ϕ8

-J6R : Single use fitting, right-side mounting
-J6L : Single use fitting, left-side mounting
-J6D : Single use fitting, both-side mounting
Fitting size (1(P), 3, 5(R) ports), ϕ10

■ **Valve size**

F10 Standard type

F10L Low-current type

	Valve size	Valve units	Manifold type	Manifold outlet specification	Pilot specification	Piping block specification
	Manifold model					
Base piping type	F10M	2 : 20	N (※Rc)	J M	Blank G	-JR -J5R -JL -J6R -JD -J5L -MR -J6L -ML -J5D -MD -J6D
Base piping type selectable fitting			N (※Rc)	L	Blank G	-JR Note14 -MDH Note15 -JL Note14 -J5R Note14 -JD Note14 -J6R Note14 -MR Note14 -J5L Note14 -ML Note14 -J6L Note14 -MD Note14 -J5D Note14 -MRH Note15 -J6D Note14 -MLH Note15
Direct piping type			N (※Rc) NH (※NPT)	Blank	Blank G	-JR Note14 -MDH Note15 -JL Note14 -J5R Note14 -JD Note14 -J6R Note14 -MR Note14 -J5L Note14 -ML Note14 -J6L Note14 -MD Note14 -J5D Note14 -MRH Note15 -J6D Note14 -MLH Note15

Remark: Negative common specifications are also available as made to order products (add **-129W** to the ends of the valve and manifold model order codes). For details, consult us.

Valve specification

T0 : 2-position, for single solenoid only
T1 : 2-position, single solenoid specification
T2 : 2-position, double solenoid specification
T3 : 3-position, closed center
T4 : 3-position, exhaust center
T5 : 3-position, pressure center
TA : Tandem 3-port (NC and NC)Note7
TB : Tandem 3-port (NO and NO)Note7
TC : Tandem 3-port (NC and NO)Note7

Operation type

Blank
Internal pilot typeNote5

G
External pilot typeNote6
(for positive pressure)
※ No vacuum valve can be mounted.

Manual override

Manual override button

Manual override leverNote2

Valve outlet type

-A1 With plateNote3 (base piping type)

5-port specification

-FJ With dual use fitting blockNote14 (direct piping type) F10: ϕ4, ϕ6

-FJ5 With single use fitting blockNote14 (direct piping type) F10: ϕ4

-FJ6 With single use fitting blockNote14 (direct piping type) F10: ϕ6

-FM With female thread blockNote14 (direct piping type) F10: M5×0.8

-FMH With female thread blockNote15 (direct piping type) F10: 10-32UNF

3-port specification

-FJ5A With single use fitting block, normally closed (NC)Note14 (direct piping type) F10: ϕ4

-FJ5B With single use fitting block, normally open (NO)Note14 (direct piping type) F10: ϕ4

-FJ6A With single use fitting block, normally closed (NC)Note14 (direct piping type) F10: ϕ6

-FJ6B With single use fitting block, normally open (NO)Note14 (direct piping type) F10: ϕ6

-FMA With female thread block, normally closed (NC)Note14 (direct piping type) F10: M5×0.8

-FMAH With female thread block, normally closed (NC)Note15 (direct piping type) F10: 10-32UNF

-FMB With female thread block, normally open (NO)Note14 (direct piping type) F10: M5×0.8

-FMBH With female thread block, normally open (NO)Note15 (direct piping type) F10: 10-32UNF

Caution: The 3-port specifications are only available in the valve specification **T0**, **T1**, and **T2**.

Wiring specification Note11

S type plug connector
Without connector

S type plug connector
Lead wire 300 mm [11.8 in.]

S type plug connector
Lead wire 3000 mm [118 in.]

Pre-wired positive common terminal
S type plug connector
Lead wire 300 mm [11.8 in.]

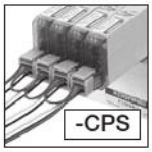

Pre-wired positive common terminal
S type plug connector
Lead wire 3000 mm [118 in.]

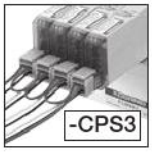

Manifold fitting specification

5-port specification

-J5 With single use fitting block (base piping type) F10: ϕ4

-J6 With single use fitting block (base piping type) F10: ϕ6

-M With female thread block (base piping type) F10: M5×0.8

3-port specification

-J5A With single use fitting block, normally closed (NC) (base piping type) F10: ϕ4

-J5B With single use fitting block, normally open (NO) (base piping type) F10: ϕ4

-J6A With single use fitting block, normally closed (NC) (base piping type) F10: ϕ6

-J6B With single use fitting block, normally open (NO) (base piping type) F10: ϕ6

-MA With female thread block, normally closed (NC) (base piping type) F10: M5×0.8

-MAH With female thread block, normally closed (NC)Note15 (base piping type) F10: 10-32UNF

-MB With female thread block, normally open (NO)Note14 (base piping type) F10: M5×0.8

-MBH With female thread block, normally open (NO)Note15 (base piping type) F10: 10-32UNF

Caution: The 3-port specifications are only available in the valve specification **T0**, **T1**, and **T2**.

Port isolator

Blank : No port isolator
-SP : For 1(P) portNote4
-SR : For 3(R2), 5(R1) portsNote4
-SA : For 1(P), 3(R2), and 5(R1) portsNote4

Back pressure prevention valve

Blank
No back pressure prevention valve

-E2
With back pressure prevention valveNote8

Individual air supply and exhaust spacer

Blank : No spacer
-NPM : Individual air supply spacer (with M5 female thread for F10)
-NRM : Individual exhaust spacer (with M5 female thread for F10)
For details, see p. 26.

Station	Valve size	Valve specifications	Operation type	IP Specifications	Manual override	Valve outlet type	Wiring specification	Manifold fitting specification	Back pressure prevention valve	Individual air supply and exhaust spacer	Port isolator	Voltage
Mounting valve model												
stn. 1 : stn.□ Note1	F10 F10L	T0 TANote7 T1 TBNote7 T2 TCNote7 T3 T4 T5	BlankNote6 GNote6	Blank -P Note12	Blank -RNote2	-A1Note3	-PN -PS Note11 -PS3 -CPS -CPS3	Blank -E2Note8	Blank -NPM -NRM	Blank -SPNote4 -SRNote4 -SANote4	DC24V DC12VNote9 AC100VNote10 AC120VNote10
	F10	BPN (for block-off plate)										
stn. 1 : stn.□ Note1	F10 F10L	T0 TANote7 T1 TBNote7 T2 TCNote7 T3 T4 T5	BlankNote6 GNote6	Blank -P Note12	Blank -RNote2	-A1Note3	-PN -PS Note11 -PS3 -CPS -CPS3	-J5Note14 -J6Note14 -MNote14 -MHNote15 -J5ANote14 -J5BNote14 -J6ANote14 -J6BNote14 -MANote14 -MAHNote15 -MBNote14 -MBHNote15	Blank -E2Note8	Blank -NPM -NRM	Blank -SPNote4 -SRNote4 -SANote4	DC24V DC12VNote9 AC100VNote10 AC120VNote10
	F10	BPN (for block-off plate)										
stn. 1 : stn.□ Note1	F10 F10L	T0 TANote7 T1 TBNote7 T2 TCNote7 T3 T4 T5	BlankNote6 GNote6	Blank -P Note12	Blank -RNote2	-FJNote14 -FJ5Note14 -FJ6Note14 -FMNote14 -FMHNote15 -FJ5ANote14 -FJ5BNote14 -FJ6ANote14 -FJ6BNote14 -FMANote14 -FMAHNote15 -FMBNote14 -FMBHNote15	-PN -PS Note11 -PS3 -CPS -CPS3	Blank -E2Note8	Blank -NPM -NRM	Blank -SPNote4 -SRNote4 -SANote4	DC24V DC12VNote9 AC100VNote10 AC120VNote10
	F10	BPN (for block-off plate)										

Notes: 1. Valve mounting location is from the left, with the solenoid on top, and the 4(A), 2(B) ports side in front.
2. When the valve specification is **T1** or **T2**, the manual override lever is placed only on the A side.
3. When selecting **J**, **M**, or **L** (base piping type) for the manifold outlet specification, always enter **-A1** (with plate) for the valve outlet type.
4. Port isolators can be installed only when piping blocks are mounted on both sides. In addition, only 1 port isolator can be mounted in 1 manifold for **-SA**, or 1 each port isolator for **-SP** and **-SR** for a total of 2 locations. When shipping, the designated port isolators are mounted between the designated station and the station to its immediate left (the next smaller stn. No.).
5. Cannot be mounted on the external pilot manifold.
6. Cannot be mounted on the internal pilot manifold.
7. Not available in external pilot type.
8. Not available with the individual exhaust spacer.
9. Not available in low-current type.
10. Not available in low-current type and tandem 3-port valves.
11. Wiring specifications of **-P** □ and **-CP** □ cannot be mounted together.
12. The IP65 protective structure around an electrical device that prevents the infiltration of solid foreign material and water from outside.
13. The 3-port specifications are only available in the valve specification **T0**, **T1**, and **T2**.
14. Can be selected only when the manifold type is **N**.
15. Can be selected only when the manifold type is **NH**.

Parts for manifold

F10Z - □

Valve size
10: 10 mm [0.394 in.] width

Parts content
GS2 : Gasket (gasket and exhaust valve)
SP : Port isolator (for 1(P) port)
SR : Port isolator (for 3(R2), 5(R1) ports)
SA : Port isolator (for 1(P), 3(R2), 5(R1) ports)

Block-off plate (block-off plate, 2 mounting screws, and plug)

F10BP N

Valve size
10: 10 mm [0.394 in.] width

For non-plug-in type

Connector-related order codes

※ For details, see p. 19.

JAZ □ - □

300 mm = 11.8 in.
1500 mm = 59 in.
3000 mm = 118 in.

Valve specification
Blank: For **T1, T2, T3, T4, T5, TA, TB, TC**
0: For **T0**

Connector specification
CP : Connector, lead wire length 300 mm
CP3 : Connector, lead wire length 3000 mm
CPN : Connector without lead wire (short bar, contacts included)
PA : Positive common A type, lead wire length 300 mm ※
PA3 : Positive common A type, lead wire length 3000 mm ※
PB : Positive common B type, lead wire length 300 mm ※
PB3 : Positive common B type, lead wire length 3000 mm ※
PC : Positive common C type, lead wire length 300 mm ※
PC3 : Positive common C type, lead wire length 3000 mm ※

FZ - □

Valve specification
For **T1, T2, T3, T4, T5, TA, TB, TC**

Connector specification
CC1.5 : Cabtyre cable, length 1500 mm ※
CC3 : Cabtyre cable, length 3000 mm ※

● Common connector assembly

A Type: JAZ-PA□※

Red Common wire (+)
Black A side (–)
White B side (–) (Insert when using as double solenoid) Note

B Type: JAZ-PB□※

Red Common wire (+)
Black A side (–)
White B side (–) (Insert when using as double solenoid) Note

C Type: JAZ-PC□※

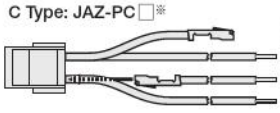

Red Common wire (+)
Black A side (–)
White B side (–) (Insert when using as double solenoid) Note
Red Common wire (+)

※ Lead wire length **Blank:** 300 mm [11.8 in.] **3:** 3000 mm [118 in.]
Note: White lead wire is not available with **JAZ0-P□□**.

Remark: Connector for negative common type also available. For details, see p. 22.

Valve base assembly (valve base and gasket)

F10Z □ - □

Valve size
10: 10 mm [0.394 in.] width

Pilot specification
Blank : Internal pilot
G : External pilot

Piping specification
VJ : Dual use fitting valve base
VJ5 : Single use fitting valve base F10: $\phi 4$
VJ6 : Single use fitting valve base F10: $\phi 6$
VJ5A : 3-port specification normally closed, single use fitting valve base F10: $\phi 4$
VJ5B : 3-port specification normally open, single use fitting valve base F10: $\phi 4$
VJ6A : 3-port specification normally closed, single use fitting valve base F10: $\phi 6$
VJ6B : 3-port specification normally open, single use fitting valve base F10: $\phi 6$
VM : Female thread valve base
VMA : 3-port specification normally closed, female thread valve base
VMB : 3-port specification normally open, female thread valve base
VMH : Female thread valve base F10: 10-32UNF
VMAH : 3-port specification normally closed, female thread valve base F10: 10-32UNF
VMBH : 3-port specification normally open, female thread valve base F10: 10-32UNF
VP : Valve base plate

Piping block assembly

F10Z □ - □

Valve size
10: 10 mm [0.394 in.] width

Piping specification
PJ : Dual use fitting piping block
PJ5 : Single use fitting piping block $\phi 8$
PJ6 : Single use fitting piping block $\phi 10$
PM : Female thread piping block

Pilot specification
Blank : Internal pilot
G : External pilot

End blocks (one set of left and right)

F10Z □ - E

Valve size
10: 10 mm [0.394 in.] width

Pilot specification
Blank : Internal pilot
G : External pilot

Back pressure prevention valve

(2 pieces for split type, with dedicated gasket)

F10Z - E2

Valve size
10: 10 mm [0.394 in.] width

Individual air supply and exhaust spacer

(Spacer for non-plug-in type, gasket, exhaust valve, and 2 mounting screws)

F10Z - □

Valve size
10: 10 mm [0.394 in.] width

Specification
NPM : Individual air supply spacer (with M5 female thread for F10)
NRM : Individual exhaust spacer (with M5 female thread for F10)

※ For details, see p. 27.

Muffler

KM - J □

Fitting size
6: Outer diameter $\phi 6$ (for individual exhaust spacer)
8: Outer diameter $\phi 8$ (for individual exhaust spacer)
10: Outer diameter $\phi 10$
(Sales unit: Set of 10 mufflers)

DIN rail

DIN - □ (Unit: 1)

Rail length
125: 125mm [4.921 in.]
⋮ (25 mm [0.984 in.] pitch)
525: 525mm [20.669 in.]

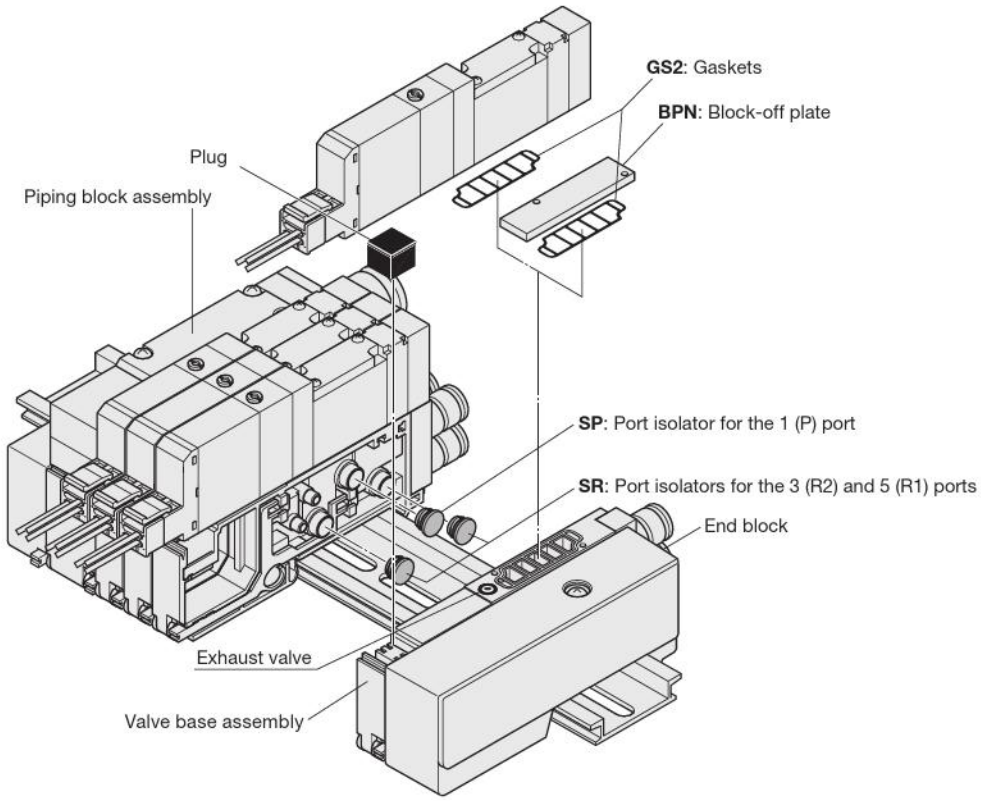

※ Illustration shows the F10 series.

Manifold Order Code Example

(4 units of F10 Series)

F10M4NL-J5R

stn.1～2	F10T0-A1-PS-J5 DC24V
stn.3	F10T2-A1-PS-J6 DC24V
stn.4	F10BPN-J6

Note: This order code example has no relationship to the illustration above.

Precautions for Order Codes

● **Orders for valves only**

Place orders from "Single Valve Unit Order Codes" on p. 66.

However, **Blank, A2, F3, F4, F5, F6, F4A, F4B, F5A, F5B, F6A,** and **F6B** cannot be selected for the valve outlet type. And for the wiring specification, **Blank, PL**, and **PL3** cannot be selected. In addition, for common terminal wiring connections, separately order the common connector assemblies listed on the previous page.

Connector-related order codes

JAZ - P - □ (for double use only)

Valve specification
For **T2, T3, T4, T5, TA, TB,** or **TC**

Connector specification

CP : Connector, lead wire length 300 mm [11.8 in.] (black, red, white, for total of 3 lead wires)
CP3 : Connector, lead wire length 3000 mm [118 in.] (black, red, white, for total of 3 lead wires)
PA : Positive common A type, lead wire length 300 mm [11.8 in.]※
PA3 : Positive common A type, lead wire length 3000 mm [118 in.]※
PB : Positive common B type, lead wire length 300 mm [11.8 in.]※
PB3 : Positive common B type, lead wire length 3000 mm [118 in.]※
PC : Positive common C type, lead wire length 300 mm [11.8 in.]※
PC3 : Positive common C type, lead wire length 3000 mm [118 in.]※
※A common connector assembly.

JAZ0 - P - □ (for single use only)

Valve specification
For **T0/T1**

Connector specification

CP : Connector, lead wire length 300 mm [11.8 in.] (black, red, for total of 2 lead wires)
CP3 : Connector, lead wire length 3000 mm [118 in.] (black, red, for total of 2 lead wires)
PA : Positive common A type, lead wire length 300 mm [11.8 in.]※
PA3 : Positive common A type, lead wire length 3000 mm [118 in.]※
PB : Positive common B type, lead wire length 300 mm [11.8 in.]※
PB3 : Positive common B type, lead wire length 3000 mm [118 in.]※
PC : Positive common C type, lead wire length 300 mm [11.8 in.] ※
PC3 : Positive common C type, lead wire length 3000 mm [118 in.]※
※A common connector assembly.

Notes:
1. When the valve specification is **T1**, select the **JAZ0-P-** □ single dedicated type.
2. When switching between the single and double type (**T1**/**T2**), purchase and use a dedicated connector for single or double use (the number of seal holes in the lead wire differs for the single and double type).
3. There is no white lead wire for the **JAZ0-P-** □ .
4. It is necessary to disassemble the connector to add a common connector assembly. Contact your nearest KOGANEI sales office.
5. For information on use in locations/atmospheres subject to substances other than water, such as organic solvents, cutting oil, or reagents, contact your nearest KOGANEI sales office.
6. For information on replacing the waterproof seal, contact your nearest KOGANEI sales office.

F10 Series Split Manifold Plug-in Type Order Codes

■ Manifold outlet specification

With dual use fitting blocks (base piping type)

Outlet port fitting
F10: ϕ4 , ϕ6

With selectable fittings (base piping type)

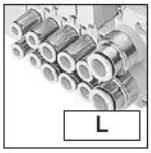

Outlet port should be selected in accordance with the manifold fitting specification.

With female thread blocks (base piping type)

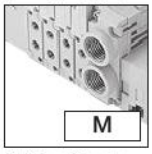

Outlet port female thread
F10: M5 × 0.8

With plates (direct piping type)

■ Pilot specification

Blank
Internal pilot manifold

G
External pilot manifold

■ Piping block specification (air supply and exhaust)

Fitting block
-JR : Dual use fitting, right-side mounting[Note15]
-JL : Dual use fitting, left-side mounting[Note15]
-JD : Dual use fitting, both-side mounting[Note15]
Fitting size (1(P), 3, 5(R) ports), ϕ8, ϕ10

Female thread block
-MR : Female thread, right-side mounting[Note15]
-ML : Female thread, left-side mounting[Note15]
-MD : Female thread, both-side mounting[Note15]
Female thread size (1(P), 3, 5(R) ports), Rc1/4

Female thread block
-MRH : Female thread, right-side mounting[Note16]
-MLH : Female thread, left-side mounting[Note16]
-MDH : Female thread, both-side mounting[Note16]
Female thread size (1(P), 3, 5(R) ports), NPT1/4

Single size fitting block
-J5R : Single use fitting, right-side mounting[Note15]
-J5L : Single use fitting, left-side mounting[Note15]
-J5D : Single use fitting, both-side mounting[Note15]
Fitting size (1(P), 3, 5(R) ports), ϕ8
-J6R : Single use fitting, right-side mounting[Note15]
-J6L : Single use fitting, left-side mounting[Note15]
-J6D : Single use fitting, both-side mounting[Note15]
Fitting size (1(P), 3, 5(R) ports), ϕ10

■ Wiring specification (wiring block)

Flat cable connector (with socket and strain relief)

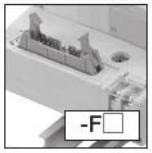

<Connector top surface wiring>
-F100 : 10-pin
-F100N: 10-pin without power terminal
-F101 : 10-pin
-F101N: 10-pin without power terminal
-F200 : 20-pin
-F200N: 20-pin without power terminal
-F201 : 20-pin
-F201N: 20-pin without power terminal
-F260 : 26-pin
-F260N: 26-pin without power terminal

<Connector side surface wiring>
-F100E : 10-pin
-F100EN : 10-pin without power terminal
-F101E : 10-pin
-F101EN : 10-pin without power terminal
-F200E : 20-pin
-F200EN : 20-pin without power terminal
-F201E : 20-pin
-F201EN : 20-pin without power terminal
-F260E : 26-pin
-F260EN : 26-pin without power terminal

For details, see p. 47.

D-sub connector

<Connector top surface wiring>
(M2.6 mounting screws)
-D250 : 25-pin[Note14]
-D250N : 25-pin without power terminal[Note14]
-D251 : 25-pin[Note14]
-D251N : 25-pin without power terminal[Note14]
(4-40 UNC mounting screws)
-D250U : 25-pin[Note15]
-D251U : 25-pin[Note15]
-D370NU : 37-pin without power terminal[Note15]

<Connector side surface wiring>
(M2.6 mounting screws)
-D250E : 25-pin[Note14]
-D250EN : 25-pin without power terminal[Note14]
-D251E : 25-pin[Note14]
-D251EN : 25-pin without power terminal[Note14]
(4-40 UNC mounting screws)
-D250EU : 25-pin[Note15]
-D251EU : 25-pin[Note15]

For details, see p. 47.

Terminal block (19 terminals, M3 screws)

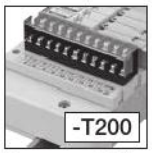

Also can provide the terminal block with cover.[Note4]

For details, see p. 47.

■ Wiring connection specification

Blank
Packed wiring:
Wiring is made in accordance with the mounted valve specifications.

-W
Double wiring:
Wiring is always for the double solenoid, regardless of the specifications of the mounted valve.

■ Wiring position (wiring block)

Blank : Left-side mounting
-R : Right-side mounting

■ Valve size

F10M 10 mm [0.394 in.] width

■ Valve size

F10 Standard type
F10L Low-current type

Valve size	Valve units	Manifold type	Manifold outlet specification	Pilot specification	Piping block specification	Wiring specification	Wiring connection specification	Wiring position	Voltage
Manifold model									
Base piping type	F10M	P (※Rc)	J M	Blank G	-JR -J5R -JL -J6R -JD -J5L -MR -J6L -ML -J5D -MD -J6D	-F100 -F201 -D251 -F200E -D250E -F100N -F201N -D251N -F200EN -D250EN -F101 -F260 -F100E -F201E -D251E -F101N -F260N -F100EN -F201EN -D251EN -F200 -D250 -F101E -F260E -T200 -F200N -D250N -F101EN -F260EN	Blank -W	Blank -R	DC24V DC12V[Note2] AC100V[Note3] AC120V[Note3]
Base piping type selectable fitting	2 : □ Note1	P (※Rc)	L	Blank G	-JR[Note15] -MDH[Note16] -JL[Note15] -J5R[Note15] -JD[Note15] -J6R[Note15] -MR[Note15] -J5L[Note15] -ML[Note15] -J6L[Note15] -MD[Note15] -J5D[Note15] -MRH[Note16] -J6D[Note15] -MLH[Note16]	-F100 -F201N -D250U[Note16] -F200E -D250EN[Note15] -F100N -F260 -D251U[Note16] -F200EN -D251E[Note15] -F101 -F260N -D370NU[Note16] -F201E -D251EN[Note15] -F101N -D250[Note15] -F100E -F201EN -D250EU[Note16] -F200 -D250N[Note15] -F100EN -F260E -D251EU[Note16] -F200N -D251[Note15] -F101E -F260EN -T200 -F201 -D251N[Note15] -F101EN -D250E[Note15]	Blank -W	Blank -R	DC24V DC12V[Note2] AC100V[Note3] AC120V[Note3]
Direct piping type		PH (※NPT)	Blank	Blank G	-JR[Note15] -MDH[Note16] -JL[Note15] -J5R[Note15] -JD[Note15] -J6R[Note15] -MR[Note15] -J5L[Note15] -ML[Note15] -J6L[Note15] -MD[Note15] -J5D[Note15] -MRH[Note16] -J6D[Note15] -MLH[Note16]	-F100 -F201N -D250U[Note16] -F200E -D250EN[Note15] -F100N -F260 -D251U[Note16] -F200EN -D251E[Note15] -F101 -F260N -D370NU[Note16] -F201E -D251EN[Note15] -F101N -D250[Note15] -F100E -F201EN -D250EU[Note16] -F200 -D250N[Note15] -F100EN -F260E -D251EU[Note16] -F200N -D251[Note15] -F101E -F260EN -T200 -F201 -D251N[Note15] -F101EN -D250E[Note15]	Blank -W	Blank -R	DC24V DC12V[Note2] AC100V[Note3] AC120V[Note3]

Notes: 1. For the maximum number of units, see the table for maximum number of valve units by wiring specification, on p. 94.
2. Not available in low-current type.
3. AC100V, AC120V is available only for the **-D250□**, **-D251□**, **-D370NU** (D-sub connector) and **-T200** (terminal block) wiring specifications. In addition, not available in low-current type and tandem 3-port valves.
4. The terminal block with cover is also available as a made to order product (add **-139W** to the end of the manifold model order code). For details, consult us.
5. Valve mounting location is from the left, with the solenoid on top, and the 4(A), 2(B) ports side in front.
6. When selecting **J**, **M**, or **L** (base piping type) for the manifold outlet specification, always enter **-A1** (with plate) for the valve outlet type.
7. Caution should be exercised that the block-off plate wiring is always double wiring (allocated 2 control pins at 1 stn.), regardless of the wiring connection specification. For wiring for a single solenoid, see p. 71.

Remark: Negative common specifications are also available as made to order products (add **-129W** to the ends of the valve and manifold model order codes). For details, consult us.

Valve specification

T0 : 2-position, for single solenoid only
T1 : 2-position, single solenoid specification
T2 : 2-position, double solenoid specification
T3 : 3-position, closed center
T4 : 3-position, exhaust center
T5 : 3-position, pressure center
TA : Tandem 3-port (NC and NC)[Note12]
TB : Tandem 3-port (NO and NO)[Note12]
TC : Tandem 3-port (NC and NO)[Note12]

Operation type

Blank
Internal pilot type[Note10]

G
External pilot type[Note11]
(for positive pressure)
※ No vacuum valve can be mounted.

Manual override

Manual override button

Manual override lever[Note8]

Valve outlet type

-A1 With plate[Note6] (base piping type)

5-port specification

-FJ With dual use fitting block[Note14] (direct piping type) **F10:** ϕ4, ϕ6

-FJ5 With single use fitting block[Note14] (direct piping type) **F10:** ϕ4

-FJ6 With single use fitting block[Note14] (direct piping type) **F10:** ϕ6

-FM With female thread block[Note14] (direct piping type) **F10:** M5 × 0.8

-FMH With female thread block[Note15] (direct piping type) **F10:** 10-32UNF

3-port specification

-FJ5A With single use fitting block, normally closed (NC)[Note15] (direct piping type) **F10:** ϕ4

-FJ5B With single use fitting block, normally open (NO)[Note15] (direct piping type) **F10:** ϕ4

-FJ6A With single use fitting block, normally closed (NC)[Note15] (direct piping type) **F10:** ϕ6

-FJ6B With single use fitting block, normally open (NO)[Note15] (direct piping type) **F10:** ϕ6

-FMA With female thread block, normally closed (NC)[Note15] (direct piping type) **F10:** M5 × 0.8

-FMAH With female thread block, normally closed (NC)[Note16] (direct piping type) **F10:** 10-32UNF

-FMB With female thread block, normally open (NO)[Note15] (direct piping type) **F10:** M5 × 0.8

-FMBH With female thread block, normally open (NO)[Note15] (direct piping type) **F10:** 10-32UNF

Caution: The 3-port specifications are only available in the valve specification **T0**, **T1**, and **T2**.

Manifold fitting specification

5-port specification

-J5 With single use fitting block (base piping type) **F10:** ϕ4

-J6 With single use fitting block (base piping type) **F10:** ϕ6

-M With female thread block (base piping type) **F10:** M5 × 0.8

3-port specification

-J5A With single use fitting block, normally closed (NC) (base piping type) **F10:** ϕ4

-J5B With single use fitting block, normally open (NO) (base piping type) **F10:** ϕ4

-J6A With single use fitting block, normally closed (NC) (base piping type) **F10:** ϕ6

-J6B With single use fitting block, normally open (NO) (base piping type) **F10:** ϕ6

-MA With female thread block, normally closed (NC) (base piping type) **F10:** M5 × 0.8

-MAH With female thread block, normally closed (NC)[Note16] (base piping type) **F10:** 10-32UNF

-MB With female thread block, normally open (NO)[Note15] (base piping type) **F10:** M5 × 0.8

-MBH With female thread block, normally open (NO)[Note16] (base piping type) **F10:** 10-32UNF

Caution: The 3-port specifications are only available in the valve specification **T0**, **T1**, and **T2**.

Back pressure prevention valve

Blank
No back pressure prevention valve

-E2
With back pressure prevention valve[Note13]

Individual air supply and exhaust spacer

Blank : No spacer
-PPM : Individual air supply spacer (with M5 female thread for F10)
-PRM : Individual exhaust spacer (with M5 female thread for F10)
For details, see p. 27.

Port isolator

Blank : No port isolator
-SP : For 1(P) port[Note9]
-SR : For 3(R2), 5(R1) ports[Note9]
-SA : For 1(P), 3(R2), and 5(R1) ports[Note9]

Station	Valve size	Valve specification	Operation type	Manual override	Valve outlet type	Manifold fitting specification	Back pressure prevention valve	Individual air supply and exhaust spacer	Port isolator	Voltage
Mounting valve model										
stn. 1 · · stn.□ Note5	F10 F10L	T0 T3 TA[Note12] T1 T4 TB[Note12] T2 T5 TC[Note12]	Blank[Note10] G[Note11]	Blank -R[Note8]	-A1[Note6]		Blank -E2[Note13]	Blank -PPM -PRM	Blank -SP[Note9] -SR[Note9] -SA[Note9]	DC24V DC12V[Note2] AC100V[Note3] AC120V[Note3]
	F10	BPP (for block-off plate)[Note7]								
stn. 1 · · stn.□ Note5	F10 F10L	T0 T3 TA[Note12] T1 T4 TB[Note12] T2 T5 TC[Note12]	Blank[Note10] G[Note11]	Blank -R[Note8]	-A1[Note6]	-J5[Note15] -J6A[Note15] -J6[Note15] -J6B[Note15] -M[Note15] -MA[Note15] -MH[Note16] -MAH[Note16] -J5A[Note15] -MB[Note15] -J5B[Note15] -MBH[Note16]	Blank -E2[Note13]	Blank -PPM -PRM	Blank -SP[Note9] -SR[Note9] -SA[Note9]	DC24V DC12V[Note2] AC100V[Note3] AC120V[Note3]
	F10	BPP (for block-off plate)[Note7]								
stn. 1 · · stn.□ Note5	F10 F10L	T0 T3 TA[Note12] T1 T4 TB[Note12] T2 T5 TC[Note12]	Blank[Note10] G[Note11]	Blank -R[Note8]	-FJ[Note15] -FJ6A[Note15] -FJ5[Note15] -FJ6B[Note15] -FJ6[Note15] -FMA[Note15] -FM[Note15] -FMAH[Note16] -FMH[Note16] -FMB[Note15] -FJ5A[Note15] -FMBH[Note16] -FJ5B[Note15]		Blank -E2[Note13]	Blank -PPM -PRM	Blank -SP[Note9] -SR[Note9] -SA[Note9]	DC24V DC12V[Note2] AC100V[Note3] AC120V[Note3]
	F10	BPP (for block-off plate)[Note7]								

Notes:
8. When the valve specification is **T1** or **T2**, the manual override lever is placed only on the A side.
9. Port isolators can be installed only when piping blocks are mounted on both sides. In addition, only 1 port isolator can be mounted in 1 manifold for **-SA**, or 1 each port isolator for **-SP** and **-SR** for a total of 2 locations. When shipping, the designated port isolators are mounted between the designated station and the station to its immediate left (the next smaller stn. No.).
10. Cannot be mounted on the external pilot manifold.
11. Cannot be mounted on the internal pilot manifold.
12. Not available in external pilot type.
13. Not available with the individual exhaust spacer.
14. The 3-port specifications are only available in the valve specification **T0**, **T1**, and **T2**.
15. Can be selected only when the manifold type is **P**.
16. Can be selected only when the manifold type is **PH**.

Parts for manifold

F10Z - □

Valve size
10: 10 mm [0.394 in.] width

Parts content
GS2 : Gasket (gasket and exhaust valve)
SP : Port isolator (for 1(P) port)
SR : Port isolator (for 3(R2), 5(R1) ports)
SA : Port isolator (for 1(P), 3(R2), 5(R1) ports)

Block-off plate (block-off plate, 2 mounting screws, and plug)

F10BP P

Valve size
10: 10 mm [0.394 in.] width

For plug-in type

Valve base assembly (valve base, gasket, lead wire, and plug-in connector)

F10Z □ - □ - □

Valve size
10: 10 mm [0.394 in.] width

Pilot specification
Blank : Internal pilot
G : External pilot

Piping specification
VJ : Dual use fitting valve base
VJ5 : Single use fitting valve base F10: ϕ4
VJ6 : Single use fitting valve base F10: ϕ6
VJ5A : 3-port specification normally closed, single use fitting valve base F10: ϕ4
VJ5B : 3-port specification normally open, single use fitting valve base F10: ϕ4
VJ6A : 3-port specification normally closed, single use fitting valve base F10: ϕ6
VJ6B : 3-port specification normally open, single use fitting valve base F10: ϕ6
VM : Female thread valve base
VMA : 3-port specification normally closed, female thread valve base
VMB : 3-port specification normally open, female thread valve base
VP : Valve base plate

Wiring specification
D : For D-sub connector
F : For flat cable connector, terminal block

Piping block assembly

F10Z □ - □

Valve size
10: 10 mm [0.394 in.] width

Pilot specification
Blank : Internal pilot
G : External pilot

Piping specification
PJ : Dual use fitting piping block
PJ5 : Single use fitting piping block ϕ8
PJ6 : Single use fitting piping block ϕ10
PM : Female thread piping block

End blocks (one set of left and right)

F10Z □ - □

Valve size
10: 10 mm [0.394 in.] width

Pilot specification
Blank : Internal pilot
G : External pilot

End block specification
E : For wiring specification T200
EL : For wiring block left side
ER : For wiring block right side

Wiring block assembly (one set)

F10Z - □ - □

Valve size
10: 10 mm [0.394 in.] width

Voltage (Not required for T200□)
DC24
DC12
AC100 (for **D250□**, **D251□** only)

Piping specification
F100 : Flat cable connector (DC specification)
F101 : Flat cable connector (DC specification)
F200 : Flat cable connector (DC specification)
F201 : Flat cable connector (DC specification)
F260 : Flat cable connector (DC specification)
D250 : D-sub connector
D251 : D-sub connector
F100N : Flat cable connector (DC specification), without power terminal
F101N : Flat cable connector (DC specification), without power terminal
F200N : Flat cable connector (DC specification), without power terminal
F201N : Flat cable connector (DC specification), without power terminal
F260N : Flat cable connector (DC specification), without power terminal
D250N : D-sub connector, without power terminal
D251N : D-sub connector, without power terminal
D370NU : D-sub connector (4-40UNC screws), without power terminal
T200L : Terminal block for left-side mounting
T200R : Terminal block for right-side mounting

Back pressure prevention valve

(2 pieces for split type, with dedicated gasket)

F10Z - E2

Valve size
10: 10 mm [0.394 in.] width

Individual air supply and exhaust spacer (Spacer for plug-in type, gasket, exhaust valve, and 2 mounting screws)

F10Z - □

Valve size
10: 10 mm [0.394 in.] width

Specification
PPM : Individual air supply spacer (with M5 female thread for F10)
PRM : Individual exhaust spacer (with M5 female thread for F10)

※ For details, see p. 27.

■ Table for maximum number of valve units by wiring specification

Wiring specification	Max. outputs	Maximum number of units — Wiring connection specification: Packed wiring (Blank)	Maximum number of units — Wiring connection specification: Double wiring (-W)
F100 □ Flat cable (10P)	8	Varies depending on the number of mounted single solenoids, double solenoids, and block-off plates. The number of controlled solenoids should be designated as the maximum number of outputs or less. D370NU is a maximum of 20 units.	4 units
F101 □ Flat cable (10P)	8		4 units
F200 □ Flat cable (20P)	16		8 units
F201 □ Flat cable (20P)	16		8 units
F260 □ Flat cable (26P)	20		10 units
D250 □ D-sub connector (25P)	16		8 units
D251 □ D-sub connector (25P)	20		10 units
D370NU D-sub connector(37P)	32		16 units
T200 Terminal block (19 terminals)	18		9 units

Muffler

KM - J□

Fitting size
6: Outer diameter $\phi 6$ (for individual exhaust spacer)
8: Outer diameter $\phi 8$ (for individual exhaust spacer)
10: Outer diameter $\phi 10$
(Sales unit: Set of 10 mufflers)

DIN rail

DIN - □ **(Unit:1)**

Rail length
125: 125mm [4.921 in.]
⋮ (25 mm [0.984 in.] pitch)
525: 525mm [20.669 in.]

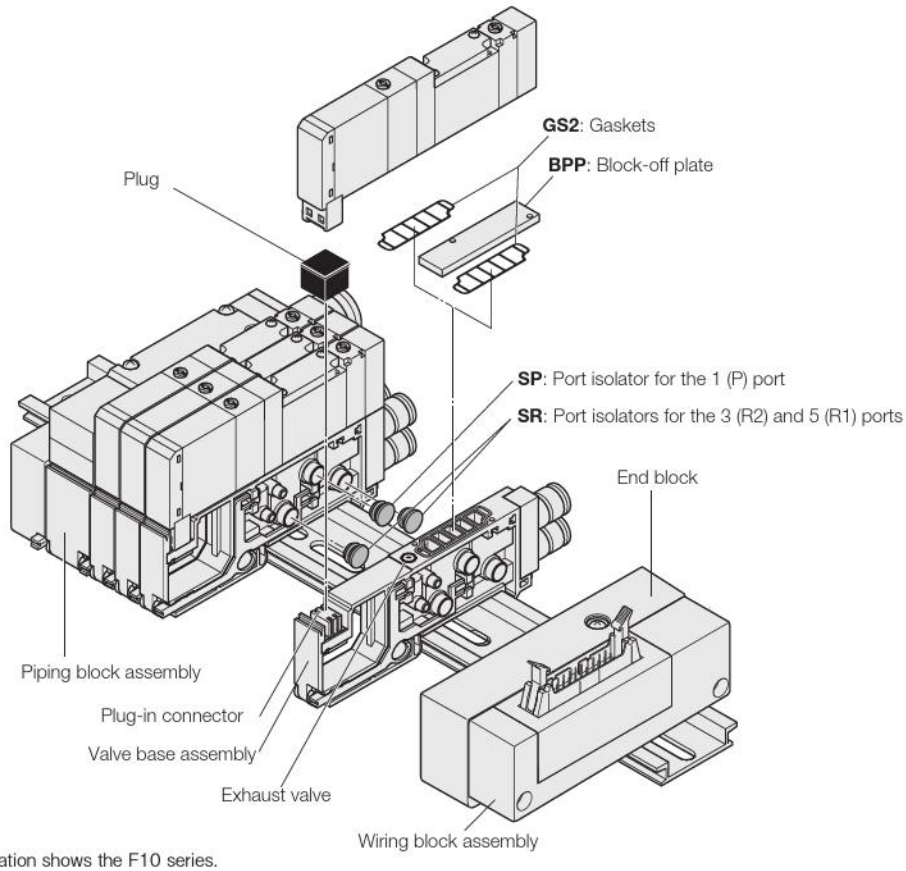

※Illustration shows the F10 series.

Manifold Order Code Example

(12 units of F10 Series)

F10M12PL-J5R-F201 DC24V

stn.1～8	F10T0-A1-J5 DC24V
stn.9～11	F10T2-A1-J6 DC24V
stn.12	F10BPP-J6

Note: This order code example has no relationship to the illustration above.

Precautions for Order Codes

● **Orders for valves only**
Place orders from "Single Valve Unit Order Codes" on p. 66.
However, **Blank, A2, F3, F4, F5, F6, F4A, F4B, F5A, F5B, F6A,** and **F6B** cannot be selected for the valve outlet type. For the wiring specification, **Blank** is the only selection.

● **Wiring connection specification**
Blank (packed wiring): Wiring is made in accordance with the mounted valve specifications.
-W (double wiring): Wiring is always for the double solenoid, regardless of the specifications of the mounted valve.

Caution

Caution should be exercised that the block-off plate wiring is always double wiring (allocated 2 control pins at 1 stn.), regardless of the wiring connection specification. The block-off plate wiring can be made as wiring for a single solenoid. Add **-1W** to the end of the block-off plate order code in the case.
For details, consult us.

F10 Series Split Manifold Serial Transmission Type Order Codes

■ Manifold outlet specification

With dual use fitting blocks (base piping type)

Outlet port fitting
F10: $\phi 4$, $\phi 6$

With selectable fittings (base piping type)

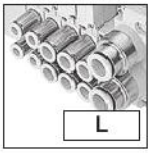

Outlet port should be selected in accordance with the manifold fitting specification.

With female thread blocks (base piping type)

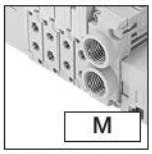

Outlet port female thread
F10: M5 × 0.8

With plates (direct piping type)

■ Pilot specification

Blank
Internal pilot manifold

G
External pilot manifold

■ Piping block specification (air supply and exhaust)

Fitting block
-JR : Dual use fitting, right-side mounting[Note13]
-JL : Dual use fitting, left-side mounting[Note13]
-JD : Dual use fitting, both-side mounting[Note13]
Fitting size (1(P), 3, 5(R) ports), $\phi 8$, $\phi 10$

Female thread block
-MR : Female thread, right-side mounting[Note13]
-ML : Female thread, left-side mounting[Note13]
-MD : Female thread, both-side mounting[Note13]
Female thread size (1(P), 3, 5(R) ports), Rc1/4

Female thread block
-MRH : Female thread, right-side mounting[Note14]
-MLH : Female thread, left-side mounting[Note14]
-MDH : Female thread, both-side mounting[Note14]
Female thread size (1(P), 3, 5(R) ports), NPT1/4

Single use fitting block
-J5R : Single use fitting, right-side mounting[Note13]
-J5L : Single use fitting, left-side mounting[Note13]
-J5D : Single use fitting, both-side mounting[Note13]
Fitting size (1(P), 3, 5(R) ports), $\phi 8$
-J6R : Single use fitting, right-side mounting[Note13]
-J6L : Single use fitting, left-side mounting[Note13]
-J6D : Single use fitting, both-side mounting[Note13]
Fitting size (1(P), 3, 5(R) ports), $\phi 10$

■ Transmission block specification

※ These are the serial transmission block specifications compatible with each system.

● Block on the right photo is the case of B7A Link Terminal.
For details, see p. 41-44.

Integrated type
-B1 : For CC-Link (16 outputs)[Note2]
-B3 : For CC-Link (32 outputs)[Note2]
-D1 : For DeviceNet (16 outputs)
-D3 : For DeviceNet (32 outputs)
-H1 : For CompoNet (16 outputs)
-K1 : For EtherCAT (16 outputs)
-K3 : For EtherCAT (32 outputs)
-M1 : For EtherNet/IP (16 outputs)[Note2]
-M3 : For EtherNet/IP (32 outputs)[Note2]

Stand-alone type
-31 : For OMRON B7A Link Terminal (standard)
-32 : For OMRON B7A Link Terminal (high speed)

■ Wiring connection specification

Blank
Packed wiring: Wiring is made in accordance with the mounted valve specifications.

-W
Double wiring: Wiring is always for the double solenoid, regardless of the specifications of the mounted valve.

■ Wiring position (transmission block)

Blank : Left-side mounting
-R : Right-side mounting

■ Valve size

F10M 10 mm [0.394 in.] width

■ Valve size

F10 Standard type
F10L Low-current type

Valve size	Valve units	Manifold type	Manifold outlet specification	Pilot specification	Piping block specification	Transmission block specification	Wiring connection specification	Wiring position
Manifold model								
Base piping type	F10M	S (※Rc)	J M	Blank G	-JR -J5R -JL -J6R -JD -J5L -MR -J6L -ML -J5D -MD -J6D	-31 -D1 -K3 -32 -D3 -M1[Note2] -B1[Note2] -H1 -M3[Note2] -B3[Note2] -K1	Blank -W	Blank -R
Base piping type selectable fitting	F10M	2 ⋮ □ Note1	L	Blank G	-JR[Note13] -MDH[Note14] -JL[Note13] -J5R[Note13] -JD[Note13] -J6R[Note13] -MR[Note13] -J5L[Note13] -ML[Note13] -J6L[Note13] -MD[Note13] -J5D[Note13] -MRH[Note14] -J6D[Note13] -MLH[Note14]	-31 -D1 -K3 -32 -D3 -M1[Note2] -B1[Note2] -H1 -M3[Note2] -B3[Note2] -K1	Blank -W	Blank -R
Direct piping type	F10M	S (※Rc) SH (※NPT)	Blank	Blank G	-JR[Note13] -MDH[Note14] -JL[Note13] -J5R[Note13] -JD[Note13] -J6R[Note13] -MR[Note13] -J5L[Note13] -ML[Note13] -J6L[Note13] -MD[Note13] -J5D[Note13] -MRH[Note14] -J6D[Note13] -MLH[Note14]	-31 -D1 -K3 -32 -D3 -M1[Note2] -B1[Note2] -H1 -M3[Note2] -B3[Note2] -K1	Blank -W	Blank -R

Notes: 1. To determine the maximum number of units, see the table for maximum number of valve units by transmission block specification, on p. 98.
2. Complies with the CE marking regulation.
3. Valve mounting location is from the left, with the solenoid on top, and the 4(A), 2(B) ports side in front.
4. When selecting **J**, **M**, or **L** (base piping type) for the manifold outlet specifications, always enter **-A1** (with plate) for the valve outlet type.
5. Caution should be exercised that the block-off plate wiring is always double wiring (allocated 2 control pins at 1 stn.), regardless of the wiring connection specification. The block-off plate wiring can be made as wiring for a single solenoid. Add **-1W** to the end of the block-off plate order code in the case.
6. When the valve specification is **T1** or **T2**, the manual override lever is placed only on the A side.

Valve specification

T0 : 2-position, for single solenoid only
T1 : 2-position, single solenoid specification
T2 : 2-position, double solenoid specification
T3 : 3-position, closed center
T4 : 3-position, exhaust center
T5 : 3-position, pressure center
TA : Tandem 3-port (NC and NC)Note10
TB : Tandem 3-port (NO and NO)Note10
TC : Tandem 3-port (NC and NO)Note10

Operation type

Blank
Internal pilot typeNote8

G
External pilot typeNote9
(for positive pressure)
※ No vacuum valve can be mounted.

Manual override

Manual override button

Manual override leverNote7

Valve outlet type

-A1 With plateNote4 (base piping type)

5-port specification

-FJ With dual use fitting blockNote13 (direct piping type) F10: ϕ4, ϕ6

-FJ5 With single use fitting blockNote13 (direct piping type) F10: ϕ4

-FJ6 With single use fitting blockNote13 (direct piping type) F10: ϕ6

-FM With female thread blockNote13 (direct piping type) F10: M5×0.8

-FMH With female thread blockNote14 (direct piping type) F10: 10-32UNF

3-port specification

-FJ5A With single use fitting block, normally closed (NC)Note13 (direct piping type) F10: ϕ4

-FJ5B With single use fitting block, normally open (NO)Note13 (direct piping type) F10: ϕ4

-FJ6A With single use fitting block, normally closed (NC)Note13 (direct piping type) F10: ϕ6

-FJ6B With single use fitting block, normally open (NO)Note13 (direct piping type) F10: ϕ6

-FMA With female thread block, normally closed (NC)Note13 (direct piping type) F10: M5×0.8

-FMAH With female thread block, normally closed (NC)Note14 (direct piping type) F10: 10-32UNF

-FMB With female thread block, normally open (NO)Note13 (direct piping type) F10: M5×0.8

-FMBH With female thread block, normally open (NO)Note14 (direct piping type) F10: 10-32UNF

Caution: The 3-port specifications are only available in the valve specification **T0**, **T1**, and **T2**.

Manifold fitting specification

5-port specification

-J5 With single use fitting block (base piping type) F10: ϕ4

-J6 With single use fitting block (base piping type) F10: ϕ6

-M With female thread block (base piping type) F10: M5×0.8

3-port specification

-J5A With single use fitting block, normally closed (NC) (base piping type) F10: ϕ4

-J5B With single use fitting block, normally open (NO) (base piping type) F10: ϕ4

-J6A With single use fitting block, normally closed (NC) (base piping type) F10: ϕ6

-J6B With single use fitting block, normally open (NO) (base piping type) F10: ϕ6

-MA With female thread block, normally closed (NC) (base piping type) F10: M5×0.8

-MAH With female thread block, normally closed (NC)Note14 (base piping type) F10: 10-32UNF

-MB With female thread block, normally open (NO)Note13 (base piping type) F10: M5×0.8

-MBH With female thread block, normally open (NO)Note14 (base piping type) F10: 10-32UNF

Caution: The 3-port specifications are only available in the valve specification **T0**, **T1**, and **T2**.

Port isolator

Blank : No port isolator
-SP : For 1(P) portNote7
-SR : For 3(R2), 5(R1) portsNote7
-SA : For 1(P), 3(R2), and 5(R1) portsNote7

Back pressure prevention valve

Blank
No back pressure prevention valve

-E2
With back pressure prevention valveNote11

Individual air supply and exhaust spacer

Blank : No spacer
-PPM : Individual air supply spacer (with M5 female thread for F10)
-PRM : Individual exhaust spacer (with M5 female thread for F10)
For details, see p. 27.

Station	Valve size	Valve specification	Operation type	Manual override	Valve outlet type	Manifold fitting specification	Back pressure prevention valve	Individual air supply and exhaust spacer	Port isolator	Voltage
Mounting valve model										
stn. 1 : stn.□ Note3	F10 F10L	T0 T3 TANote10 T1 T4 TBNote10 T2 T5 TCNote10	BlankNote8 GNote9	Blank -RNote6	-A1Note4		Blank -E2Note11	Blank -PPM -PRM	Blank -SPNote7 -SRNote7 -SANote7	DC24V
	F10	BPP (for block-off plate)Note4								
stn. 1 : stn.□ Note3	F10 F10L	T0 T3 TANote10 T1 T4 TBNote10 T2 T5 TCNote10	BlankNote8 GNote9	Blank -RNote6	-A1Note4	-J5Note13 -J6ANote13 -J6Note13 -J6BNote13 -MNote13 -MANote13 -MHNote12 -MAHNote14 -J5ANote13 -MBNote13 -J5BNote13 -MBHNote14	Blank -E2Note11	Blank -PPM -PRM	Blank -SPNote7 -SRNote7 -SANote7	DC24V
	F10	BPP (for block-off plate)Note4								
stn. 1 : stn.□ Note3	F10 F10L	T0 T3 TANote10 T1 T4 TBNote10 T2 T5 TCNote10	BlankNote8 GNote9	Blank -RNote6	-FJNote13 -FJ6ANote13 -FJ5Note13 -FJ6BNote13 -FJ6Note13 -FMANote13 -FMNote13 -FMAHNote14 -FMHNote14 -FMBNote13 -FJ5ANote13 -FMBHNote12 -FJ5BNote13		Blank -E2Note11	Blank -PPM -PRM	Blank -SPNote7 -SRNote7 -SANote7	DC24V
	F10	BPP (for block-off plate)Note5								

Notes: 7. Port isolators can be installed only when piping blocks are mounted on both sides. In addition, only 1 port isolator can be mounted in 1 manifold for **-SA**, or 1 each port isolator for **-SP** and **-SR** for a total of 2 locations. When shipping, the designated port isolators are mounted between the designated station and the station to its immediate left (the next smaller stn. No.).
8. Cannot be mounted on the external pilot manifold.
9. Cannot be mounted on the internal pilot manifold.
10. Not available in external pilot type.
11. Not available with the individual exhaust spacer.
12. The 3-port specifications are only available in the valve specification **T0**, **T1**, and **T2**.
13. Can be selected only when the manifold type is **S**.
14. Can be selected only when the manifold type is **SH**.

Parts for manifold

F10Z - □

Valve size
10: 10 mm [0.394 in.] width

Parts content
GS2 : Gasket (gasket and exhaust valve)
SP : Port isolator (for 1(P) port)
SR : Port isolator (for 3(R2), 5(R1) ports)
SA : Port isolator (for 1(P), 3(R2), 5(R1) ports)

Block-off plate (block-off plate, 2 mounting screws, and plug)

F10BPP

Valve size
10: 10 mm [0.394 in.] width

Valve base assembly
(valve base, gasket, lead wire, and plug-in connector)

F10Z □ - □ - F

Valve size
10: 10 mm [0.394 in.] width

Pilot specification
Blank : Internal pilot
G : External pilot

Piping specification
VJ : Dual use fitting valve base
VJ5 : Single use fitting valve base F10: ϕ4
VJ6 : Single use fitting valve base F10: ϕ6
VJ5A : 3-port specification normally closed, single use fitting valve base F10: ϕ4
VJ5B : 3-port specification normally open, single use fitting valve base F10: ϕ4
VJ6A : 3-port specification normally closed, single use fitting valve base F10: ϕ6
VJ6B : 3-port specification normally open, single use fitting valve base F10: ϕ6
VM : Female thread valve base
VMA : 3-port specification normally closed, female thread valve base
VMB : 3-port specification normally open, female thread valve base
VP : Valve base plate

Piping block assembly

F10Z □ - □

Valve size
10: 10 mm [0.394 in.] width

Piping specification
PJ : Dual use fitting piping block
PJ5 : Single use fitting piping block ϕ8
PJ6 : Single use fitting piping block ϕ10
PM : Female thread piping block Rc1/4

Pilot specification
Blank : Internal pilot
G : External pilot

End blocks (one set of left and right)

F10Z □ - □

Valve size
10: 10 mm [0.394 in.] width

End block specification
EL : For left side
ER : For right side

Pilot specification
Blank : Internal pilot
G : External pilot

Wiring block assembly ※

F10Z - F201N - DC24

Valve size
10: 10 mm [0.394 in.] width

※ Use this when the transmission block specification is **-31**, or **-32**.

Back pressure prevention valve
(2 units for split type, with dedicated gasket)

F10Z - E2

Valve size
10: 10 mm [0.394 in.] width

Individual air supply and exhaust spacer (Spacer for plug-in type, gasket, exhaust valve, and 2 mounting screws)

F10Z - □

Valve size
10: 10 mm [0.394 in.] width

Specification
PPM : Individual air supply spacer (with M5 female thread for F10)
PRM : Individual exhaust spacer (with M5 female thread for F10)

※ For details, see p. 27.

Serial transmission block (single unit)

YS2 □ □

Transmission block specification
31: For OMRON B7A Link Terminal (standard)
32: For OMRON B7A Link Terminal (high speed)

Wiring position
L : For stand-alone type, left-side mounting ※
R : For stand-alone type, right-side mounting ※
※ DIN rail included (length 75 mm [2.95 in.])

YS6 □ (Dedicated for manifold mounting)

Transmission block specification
B1 : For CC-Link (16 outputs)
B3 : For CC-Link (32 outputs)
D1 : For DeviceNet (16 outputs)
D3 : For DeviceNet (32 outputs)
H1 : For CompoNet (16 outputs)

YS7 □ □ (Dedicated for manifold mounting)

Transmission block specification
K1 : For EtherCAT (16 outputs)
K3 : For EtherCAT (32 outputs)
M1 : For EtherNet/IP (16 outputs)
M3 : For EtherNet/IP (32 outputs)

Wiring position
L : Left-side mounting
R : Right-side mounting

■ Table for maximum number of valve units by transmission block specification

Transmission block specifications	Max. outputs	Maximum number of units — Wiring connection specification: Packed wiring (Blank)	Maximum number of units — Wiring connection specification: Double wiring (-W)
-31: For Omron B7A Link Terminal (standard)	16	Varies depending on the number of mounted single solenoids, double solenoids, and block-off plates. The number of controlled solenoids should be designated as the maximum number of outputs or less. **-B3, -D3, -K3, and -M3** are a maximum of 20 units.	8 units
-32: For Omron B7A Link Terminal (high speed)	16		8 units
-B1: For CC-Link (16 outputs)	16		8 units
-B3: For CC-Link (32 outputs)	32		16 units
-D1: For DeviceNet (16 outputs)	16		8 units
-D3: For DeviceNet (32 outputs)	32		16 units
-H1: For CompoNet (16 outputs)	16		8 units
-K1: For EtherCAT (16 outputs)	16		8 units
-K3: For EtherCAT (32 outputs)	32		16 units
-M1: For EtherNet/IP (16 outputs)	16		8 units
-M3: For EtherNet/IP (32 outputs)	32		16 units

Muffler

KM - J □

Fitting size
- **6:** Outer diameter ϕ6 (for individual exhaust spacer)
- **8:** Outer diameter ϕ8 (for individual exhaust spacer)
- **10:** Outer diameter ϕ10

(Sales unit: Set of 10 mufflers)

DIN rail

DIN - □ **(Unit:1)**

Rail length
125: 125mm [4.921 in.]
⋮ (25 mm [0.984 in.] pitch)
525: 525mm [20.669 in.]

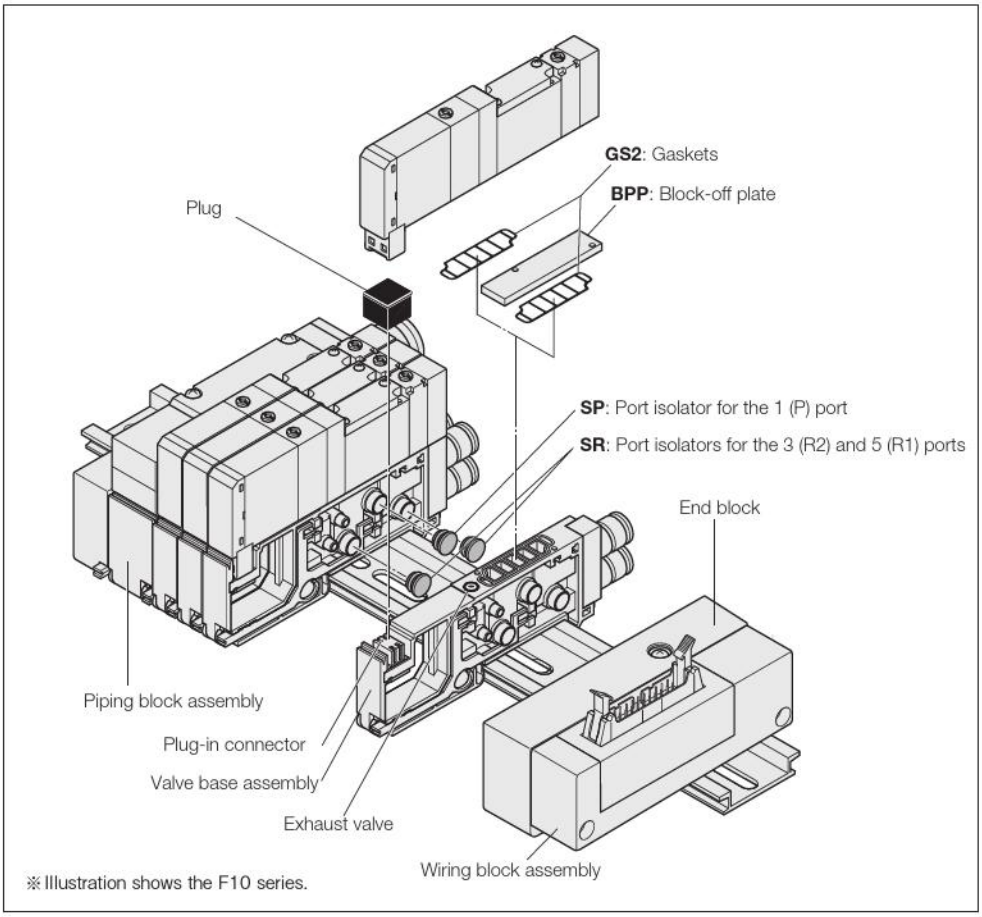

※Illustration shows the F10 series.

Manifold Order Code Example

(8 units of F10 Series)

F10M8SL-J5R-B1-W

stn.1～5	**F10T0-A1-J5 DC24V**
stn.6～7	**F10T2-A1-J6 DC24V**
stn.8	**F10BPP-J6**

Note: This order code example has no relationship to the illustration above.

Precautions for Order Codes

● **Orders for valves only**
Place orders from "Single Valve Unit Order Codes" on p. 66.
However, **Blank, A2, F3, F4, F5, F6, F4A, F4B, F5A, F5B, F6A,** and **F6B** cannot be selected for the valve outlet type. For the wiring specification, **Blank** is the only selection.

● **Wiring connection specification**
Blank (packed wiring): Wiring is made in accordance with the mounted valve specifications.
-W (double wiring): Wiring is always for the double solenoid, regardless of the specifications of the mounted valve.

Caution

Caution should be exercised that the block-off plate wiring is always double wiring (allocated 2 control pins at 1 stn.), regardless of the wiring connection specification. The block-off plate wiring can be made as wiring for a single solenoid. Add **-1W** to the end of the block-off plate order code in the case.
For details, consult us.

F10 Series Easy Assembly Type Manifold Non-Plug-in Type Order Codes

■ **Valve size**

F10M
10 mm [0.394 in.] width

■ **Manifold outlet specification**

With dual use fitting blocks (base piping type)

Outlet port fitting
F10: ϕ4, ϕ6

With selectable fittings (base piping type)

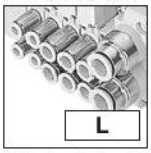

Outlet port should be selected in accordance with the manifold fitting specification.

With female thread blocks (base piping type)

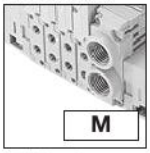

Outlet port female thread
F10: M5 x 0.8

With plates (direct piping type)

■ **Pilot specification**

Blank
Internal pilot manifold

G
External pilot manifold

■ **Piping block specification (air supply, exhaust and intermediate)**

Fitting block
-JR: Dual use fitting, right-side mounting
-JL: Dual use fitting, left-side mounting
-JD: Dual use fitting, both-side mounting
Fitting size (1(P), 3, 5(R) ports), ϕ6, ϕ8

Female thread block
-MR: Female thread, right-side mounting
-ML: Female thread, left-side mounting
-MD: Female thread, both-side mounting
Female thread size (1(P), 3, 5(R) ports), Rc1/8

Female thread block
-MRH: Female thread, right-side mounting Note15
-MLH: Female thread, left-side mounting Note15
-MDH: Female thread, both-side mounting Note15
Female thread size (1(P), 3, 5(R) ports), NPT1/8

Single use fitting block
-J5R: Single use fitting, right-side mounting
-J5L: Single use fitting, left-side mounting
-J5D: Single use fitting, both-side mounting
Fitting size (1(P), 3, 5(R) ports), ϕ6
-J6R: Single use fitting, right-side mounting
-J6L: Single use fitting, left-side mounting
-J6D: Single use fitting, both-side mounting
Fitting size (1(P), 3, 5(R) ports), ϕ8

Intermediate piping block
-JT : Dual use fitting, both-side mounting, intermediate piping block, ϕ6, ϕ8
-J5T: Single use fitting, both-side mounting, intermediate piping block, ϕ6
-J6T: Single use fitting, both-side mounting, intermediate piping block, ϕ8
-MT : Female thread, both-side mounting, intermediate piping block, Rc1/8
-MTH: Female thread, both-side mounting, intermediate piping block NPT1/8 Note15

■ **Mounting specification**

Blank
Direct mounting

-DN
With DIN bracket (no rail)

-DR
With DIN bracket, with rail
Caution: For information on rails assembled and shipped, see pages 144 and 145.

	Valve size	Valve units	Manifold type	Manifold outlet specification	Pilot specification	Piping block specification	Mounting specification
	Manifold model						
Base piping type	F10M	2 : 21 Note1	XN (※Rc)	J M	Blank G	-JR -J5R -JT -JL -J5L -J5T -JD -J5D -J6T -MR -J6R -MT -ML -J6L -MD -J6D	Blank -DN -DR
Base piping type selectable fitting			XN (※Rc) XNH (※NPT) Only L or Blank is available in the inch female thread specification and the manifold outlet specification.	L	Blank G	-JR -MLH Note15 -J6D -JL -MDH Note15 -JT -JD -J5R -J5T -MR -J5L -J6T -ML -J5D -MT -MD -J6R -MTH Note15 -MRH Note15 -J6L	Blank -DN -DR
Direct piping type				Blank	Blank G	-JR -MLH Note15 -J6D -JL -MDH Note15 -JT -JD -J5R -J5T -MR -J5L -J6T -ML -J5D -MT -MD -J6R -MTH Note15 -MRH Note15 -J6L	Blank -DN -DR

Notes:1.Up to 20 valves, with one intermediate piping block.
2.Valve mounting location is from the left, with the solenoid on top, and the 4(A), 2(B) ports side in front.
3.When the valve specification is **T1** or **T2**, the manual override lever is placed only on the **A** side.
4.When selecting **J**, **M**, or **L** (base piping type) for the manifold outlet specification, always enter **-A1** (with plate) for the valve outlet type.
5. Port isolators can be installed only when piping blocks are mounted on both sides. In addition, only 1 port isolator can be mounted in 1 manifold for **-XSA**, or 1 each port isolator for **-XSP** and **-XSR** for a total of 2 locations. When shipping, the designated port isolators are mounted between the designated station and the station to its immediate left (the next smaller stn. No.).

Valve type

T0: 2-position, for single solenoid only
T1: 2-position, single solenoid specification
T2: 2-position, double solenoid specification
T3: 3-position, closed center
T4: 3-position, exhaust center
T5: 3-position, pressure center
TA: Tandem 3-port (NC and NC)Note7
TB: Tandem 3-port (NO and NO)Note7
TC: Tandem 3-port (NC and NO)Note7

Operation type

Blank
Internal pilot typeNote5

G
External pilot typeNote6 (for positive pressure)
※No vacuum valve can be mounted.

Manual override

Manual override button

Manual override leverNote2

Valve outlet type

-A1 With plateNote4 (base piping type)

5-port specification

-FJ With dual use fitting block **F10**: $\phi4$, $\phi6$ (direct piping type)
-FJ5 With single use fitting block **F10**: $\phi4$ (direct piping type)
-FJ6 With single use fitting block **F10**: $\phi6$ (direct piping type)
-FM With female thread block **F10**: M5 x 0.8 (direct piping type)
-FMH With female thread blockNote15 (direct piping type) **F10**: 10-32UNF

3-port specification

-FJ5A With single use fitting block, normally closed (NC) (direct piping type) **F10**: $\phi4$
-FJ5B With single use fitting block, normally open (NO) (direct piping type) **F10**: $\phi4$
-FJ6A With single use fitting block, normally closed (NC) (direct piping type) **F10**: $\phi6$
-FJ6B With single use fitting block, normally open (NO) (direct piping type) **F10**: $\phi6$
-FMA With female thread block, normally closed (NC) (direct piping type) **F10**: M5 x 0.8
-FMAH With female thread block, normally closed (NC)Note15 (direct piping type) **F10**: 10-32UNF
-FMB With female thread block, normally open (NO) (direct piping type) **F10**: M5 x 0.8
-FMBH With female thread block, normally open (NO)Note15 (direct piping type) **F10**: 10-32UNF

Caution: The 3-port specifications are only available in the valve specification **T0**, **T1**, and **T2**.

Wiring specificationNote12

S type plug connector
Without connector

S type plug connector
Lead wire 300 mm [11.8 in.]

-PS3
S type plug connector
Lead wire 3000 mm [118 in.]

Pre-wired positive common terminal
S type plug connector
Lead wire 300 mm [11.8 in.]

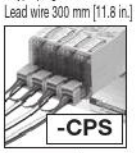

-CPS3
Pre-wired positive common terminal
S type plug connector
Lead wire 3000 mm [118 in.]

-MS
Pre-wired negative common terminal
S type plug connector
Lead wire 300 mm [11.8 in.]

-MS3
Pre-wired negative common terminal
S type plug connector
Lead wire 3000 mm [118 in.]

-CMS
Pre-wired negative common terminal
S type plug connector
Lead wire 300 mm [11.8 in.]

-CMS3
Pre-wired negative common terminal
S type plug connector
Lead wire 3000 mm [118 in.]

Manifold fitting specification

5-port specification

-J5 With single use fitting block **F10**: $\phi4$ (base piping type)
-J6 With single use fitting block **F10**: $\phi6$ (base piping type)
-M With female thread block **F10**: M5 x 0.8 (base piping type)
-MH With female thread blockNote15 (base piping type) **F10**: 10-32UNF

3-port specification

-J5A With single use fitting block, normally closed (NC) (base piping type) **F10**: $\phi4$
-J5B With single use fitting block, normally open (NO) (base piping type) **F10**: $\phi4$
-J6A With single use fitting block, normally closed (NC) (base piping type) **F10**: $\phi6$
-J6B With single use fitting block, normally open (NO) (base piping type) **F10**: $\phi6$
-MA With female thread block, normally closed (NC) (base piping type) **F10**: M5 x 0.8
-MAH With female thread block, normally closed (NC)Note15 (base piping type) **F10**: 10-32UNF
-MB With female thread block, normally open (NO) (base piping type) **F10**: M5 x 0.8
-MBH With female thread block, normally open (NO)Note15 (base piping type) **F10**: 10-32UNF

Caution: The 3-port specifications are only available in the valve specification **T0**, **T1**, and **T2**.

Port isolator

Blank: No port isolator
-XSP: For 1 (P) portNote4
-XSR: For 3 (R2), 5 (R1) portsNote4
-XSA: For 1 (P), 3 (R2), and 5(R1) portsNote4

Back pressure prevention valve

Blank
No back pressure prevention valve

-E2
With back pressure prevention valveNote8

Individual air supply and exhaust spacer

Blank: No spacer
-XNPM: Individual air supply spacer (with M5 female thread for F10)
-XNRM: Individual exhaust spacer (with M5 female thread for F10)
-STP : With stop valveNote5

See page 27 for details.

Valve size

F10 Standard type
F10L Low-current type

Station	Valve size	Valve specification	Operation type	IP Specifications	Manual override	Valve outlet type	Wiring specification	Manifold fitting specification	Back pressure prevention valve	Individual air supply, exhaust spacer and stop valve	Port isolator	Voltage
Mounting valve model												
stn. 1 ⋮ stn.□ Note2	F10 F10L	T0 T1 T2 T3 T4 T5 TA Note8 TB Note8 TC Note8	Blank Note6 G Note7	Blank -P Note12	Blank -R Note3	-A1 Note4	-PN -PS Note12 -PS3 -CPS -CPS3 -MS -MS3 -CMS -CMS3	Blank -E2 Note9	Blank -XNPM -XNRM -STP Note6	Blank -XSP Note5 -XSR Note5 -XSA Note5	DC24V DC12V Note10 AC100V Note11
	F10	XBPN (for block-off plate)								Blank -STP Note6		
	When selecting the intermediate piping block, see page 100 when specifying it.											
stn. 1 ⋮ stn.□ Note2	F10 F10L	T0 T1 T2 T3 T4 T5 TA Note8 TB Note8 TC Note8	Blank Note6 G Note7	Blank -P Note12	Blank -R Note3	-A1 Note4	-PN -PS Note12 -PS3 -CPS -CPS3 -MS -MS3 -CMS -CMS3	-J5 Note14 -J6 Note14 -M Note14 -MH Note15 -J5A Note14 -J5B Note14 -J6A Note14 -J6B Note14 -MA Note14 -MAH Note15 -MB Note14 -MBH Note15	Blank -E2 Note9	Blank -XNPM -XNRM -STP Note6	Blank -XSP Note5 -XSR Note5 -XSA Note5	DC24V DC12V Note10 AC100V Note11
	F10	XBPN (for block-off plate)								Blank -STP Note6		
	When selecting the intermediate piping block, see page 100 when specifying it.											
stn. 1 ⋮ stn.□ Note2	F10 F10L	T0 T1 T2 T3 T4 T5 TA Note8 TB Note8 TC Note8	Blank Note6 G Note7	Blank -P Note12	Blank -R Note3	-FJ Note14 -FJ5 Note14 -FJ6 Note14 -FM Note14 -FMH Note15 -FJ5A Note14 -FJ5B Note14 -FJ6A Note14 -FJ6B Note14 -FMA Note14 -FMAH Note15 -FMB Note14 -FMBH Note15	-PN -PS Note12 -PS3 -CPS -CPS3 -MS -MS3 -CMS -CMS3	Blank -E2 Note9	Blank -XNPM -XNRM -STP Note6	Blank -XSP Note5 -XSR Note5 -XSA Note5	DC24V DC12V Note10 AC100V Note11
	F10	XBPN (for block-off plate)								Blank -STP Note6		
	When selecting the intermediate piping block, see page 102 when specifying it.											

Notes: 6. Cannot be mounted on the external pilot manifold. Only direct mounting is available.
7. Cannot be mounted on the internal pilot manifold.
8. Not available in external pilot type.
9. Not available with the individual exhaust spacer.
10. Not available in low-current type.
11. Not available in low-current type and tandem 3-port valves.
12. Wiring specifications of -P□ and -CP□, the -M□ and -CM□, positive common and negative common cannot be mounted together.
13. The IP65 protective structure around an electrical device that prevents the infiltration of solid foreign material and water from outside.
14. The 3-port specifications are only available in the valve specification **T0**, **T1**, and **T2**.
15. Can be selected only when the manifold type is **XNH**.

Intermediate piping block

(When mounting an intermediate piping block to the manifold, complete the following type and specify the station specified on page 101.)

F 10 ZX□ - □ - TN - □

Valve size
10: 10 mm
[0.394 in.] width

Pilot specification
Blank: Internal pilot
G: External pilot

Piping block Specification[Note]
PJ : With dual use fitting ϕ6, ϕ8
PJ5 : With single use fitting ϕ6
PJ6 : With single use fitting ϕ8
PM : With female thread Rc 1/8
PMH : WIth female thread NPT 1/8

Manifold type
TN: **For non-plug-in type**

Port isolator
Blank: No port isolator
XSP: Port isolator (1(P) port)
XSR: Port isolator (3(R2), 5(R1) ports)
XSA: Port isolator (1(P), 3(R2), and 5(R1) ports)

Note:See the following table for combinations of intermediate piping block port specifications and manifold piping block specifications.

Manifold piping specifications	Intermediate piping block
JT	PJ
J5T	PJ5
J6T	PJ6
MT	PM
MTH	PMH

Parts for manifold

F 10 ZX - □

Valve size
10: 10 mm [0.394 in.] width

Parts content
GS2: Gasket (gasket and exhaust valve)
GS3: Gasket (valve base side)
XSP: Port isolator (for 1(P) port)
XSR: Port isolator (for 3(R2), 5(R1) ports)
XSA: Port isolator (for 1(P), 3(R2), 5(R1) ports)
DN : DIN mounting bracket (one set of two)

Block-off plate (block-off plate, 2 mounting screws, and plug)

F 10 XBP N

Valve size
10: 10 mm [0.394 in.] width

For non-plug-in type

Back pressure prevention valve (2 pieces for split type, with dedicated gasket)

F 10 Z - E2

Valve size
10: 10 mm [0.394 in.] width

Individual air supply and exhaust spacer (Spacer for non-plug-in type, gasket, exhaust valve, and 2 mounting screws)

F 10 ZX - □

Valve size
10: 10 mm [0.394 in.] width

Specification
XNPM: Individual air supply spacer (with M5 female thread for F10)
XNRM: Individual exhaust spacer (with M5 female thread for F10)

※For details, see p.27.

Valve base assembly (valve base, gasket, and two connecting rods for adding)

F 10 ZX - □ *For use with both internal pilot and external pilot

Valve size
10: 10 mm [0.394 in.] width

Piping specifications
VJ : Dual use fitting valve base
VJ5 : Single use fitting valve base F10: $\phi 4$
VJ6 : Single diameter fitting valve base F10: $\phi 6$
VJ5A : 3-port specification normally closed, single use fitting valve base F10: $\phi 4$
VJ5B : 3-port specification normally open, single use fitting valve base F10: $\phi 4$
VJ6A : 3-port specification normally closed, single use fitting valve base F10: $\phi 6$
VJ6B : 3-port specification normally open, single use fitting valve base F10: $\phi 6$
VM : Female thread valve base F10: M5 x 0.8
VMA : 3-port specification normally closed, female thread valve base F10: M5 x 0.8
VMB : 3-port specification normally open, female thread valve base F10: M5 x 0.8
VMH : Female thread valve base F10:10-32UNF
VMAH : 3-port specification normally closed, female valve base F10:10-32UNF
VMBH : 3-port specification normally open, female valve base F10:10-32UNF
VP : Valve base plate

Piping block assembly (non-plug-in)

F 10 ZX□ - □ - □ - □ - □

Valve size
10: 10 mm [0.394 in.] width

Port isolator Note2
Blank: No port isolator
XSP: Port isolator (1(P) port)
XSR: Port isolator (3(R2), 5(R1) ports)
XSA: Port isolator (1(P), 3(R2), and 5(R1) ports)

Mounting specification Note3
Blank: Without DIN bracket
DN: With DIN bracket

Pilot specification
Blank: Internal pilot
G: External pilot

Manifold type
LN : Left side piping block (for non-plug-in type) without circuit board (with end lid)
RN : Right piping block, without circuit board
TN : Intermediate piping block (for non-plug-in type) without circuit board

Piping block Specification Note1
PJ : With dual use fitting $\phi 6$, $\phi 8$
PJ5: With single use fitting $\phi 6$
PJ6: With single use fitting $\phi 8$
PM : With female thread Rc 1/8
PMH : WIth female thread NPT 1/8
PP : Plate (without fitting)

Notes:1.The fitting of the piping block is included. One set of two connecting rods is also included for a LN and TN type manifold.
2.Port isolator selection only available when the piping block name is TN.
3.Only when the manifold type is LN or RN.

Muffler

KM - J □

Fitting size
6: Outer diameter φ6 (for piping block)
8: Outer diameter φ8 (for piping block)
(Sales unit: Set of 10 mufflers)

Connecting rod (1 set of 2)

F 10 ZX - □ - □

Valve size
10: 10 mm [0.394 in.] width

Specification
RV: For valve base
RH: For left piping block
RC: For intermediate piping block

Number of units
01 ~ 20: When type for valve base (RV) is selected
01 : When type for left side piping block (RH) is selected
01 : When type for intermediate piping block (RC) is selected

DIN rail

DIN - □ (Unit:1)

Rail length
125: 125mm [4.921 in.]
⋮ (25 mm [0.984 in.] pitch)
525: 525mm [20.669 in.]

Connector-related order codes

JAZ - P - □ (for double use only)

Valve specification
For **T2 ,T3, T4, T5, TA, TB,** or **TC**

IP Specification

Connector specification
CP : Positive common, connector, lead wire length 300 mm [11.8 in.] (black, red, white, for total of 3 lead wires)
CP3 : Positive common, connector, lead wire length 3000 mm [118 in.] (black, red, white, for total of 3 lead wires)
PA : Positive common A type, lead wire length 300 mm [11.8 in.]※
PA3 : Positive common A type, lead wire length 3000 mm [118 in.]※
PB : Positive common B type, lead wire length 300 mm [11.8 in.]※
PB3 : Positive common B type, lead wire length 3000 mm [118 in.]※
PC : Positive common C type, lead wire length 300 mm [11.8 in.]※
PC3 : Positive common C type, lead wire length 3000 mm [118 in.]※
CM : Negative common, connector, lead wire length 300 mm [11.8 in.]※
CM3: Negative common, connector, lead wire length 3000 mm [118 in.]※
MA : Negative common A type, lead wire length 300 mm [11.8 in.]※
MA3: Negative common A type, lead wire length 3000 mm [118 in.]※
MB : Negative common B type, lead wire length 300 mm [11.8 in.]※
MB3: Negative common B type, lead wire length 3000 mm [118 in.]※
MC : Negative common C type, lead wire length 300 mm [11.8 in.]※
MC3: Negative common C type, lead wire length 3000 mm [118 in.]※
※A common connector assembly.

JAZ0 - P - □ (for single use only)

Valve specification
For **T0,** or **T1**

IP Specification

Connector specification
CP : Positive common, connector, lead wire length 300 mm [11.8 in.] (black, red, for total of 2 lead wires)
CP3 : Positive common, connector, lead wire length 3000 mm [118 in.] (black, red, for total of 2 lead wires)
PA : Positive common A type, lead wire length 300 mm [11.8 in.]※
PA3 : Positive common A type, lead wire length 3000 mm [118 in.]※
PB : Positive common B type, lead wire length 300 mm [11.8 in.]※
PB3 : Positive common B type, lead wire length 3000 mm [118 in.]※
PC : Positive common C type, lead wire length 300 mm [11.8 in.]※
PC3 : Positive common C type, lead wire length 3000 mm [118 in.]※
CM : Negative common, connector, lead wire length 300 mm [11.8 in.]※
CM3: Negative common, connector, lead wire length 3000 mm [118 in.]※
MA : Negative common A type, lead wire length 300 mm [11.8 in.]※
MA3: Negative common A type, lead wire length 3000 mm [118 in.]※
MB : Negative common B type, lead wire length 300 mm [11.8 in.]※
MB3: Negative common B type, lead wire length 3000 mm [118 in.]※
MC : Negative common C type, lead wire length 300 mm [11.8 in.]※
MC3: Negative common C type, lead wire length 3000 mm [118 in.]※
※A common connector assembly.

Connector-related order codes

※For details, see p. 22.

JAZ □ - □

Valve specification
Blank: For **T1, T2 ,T3, T4, T5, TA, TB,** or **TC**
0: For **T0**

Connector type
CP : Positive common, connector, lead wire length 300 mm [11.8 in.]
CP3 : Positive common, connector, lead wire length 3000 mm [118 in.]
CPN : Positive common, connector, no lead wire (with shorting bar and contact)
PA : Positive common A type, lead wire length 300 mm [11.8 in.]※
PA3 : Positive common A type, lead wire length 3000 mm [118 in.]※
PB : Positive common B type, lead wire length 300 mm [11.8 in.]※
PB3 : Positive common B type, lead wire length 3000 mm [118 in.]※
PC : Positive common C type, lead wire length 300 mm [11.8 in.]※
PC3 : Positive common C type, lead wire length 3000 mm [118 in.]※
CMN : Negative common, connector, no lead wire (with shorting bar and contact)
CM : Negative common, connector, lead wire length 300 mm [11.8 in.]※
CM3 : Negative common, connector, lead wire length 3000 mm [118 in.]※
MA : Negative common A type, lead wire length 300 mm [11.8 in.]※
MA3 : Negative common A type, lead wire length 3000 mm [118 in.]※
MB : Negative common B type, lead wire length 300 mm [11.8 in.]※
MB3 : Negative common B type, lead wire length 3000 mm [118 in.]※
MC : Negative common C type, lead wire length 300 mm [11.8 in.]※
MC3 : Negative common C type, lead wire length 3000 mm [118 in.]※

● Common connector assembly

A type: **JAZ-PA □**※

Red common wire (+)
Black A side (-)
White B side (-) (Insert when using as double solenoid)Note

B type: **JAZ-PB □**※

Red common wire (+)
Black A side (-)
White B side (-) (Insert when using as double solenoid)Note

C type: **JAZ-PC □**※

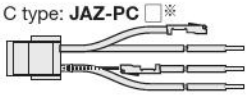

Red common wire (+)
Black A side (-)
White B side (-) (Insert when using as double solenoid)Note
Red common wire (+)

※ Lead wire length **Blank:** 300 mm [11.8 in.]
3: 3000 mm [118 in.]

Note: White lead wire is not available for **JAZ0-P□□**.

● For negative common

A type: **JAZ-MA□**※

Black common wire (-)
Red A side (+)
White B side (+) (Insert when using as double solenoid)

B type: **JAZ-MB□**※

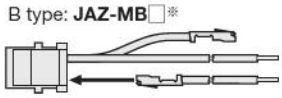

Black common wire (-)
Red A side (+)
White B side (+) (Insert when using as double solenoid)

C type: **JAZ-MC□**※

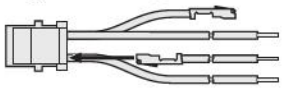

Black common wire (-)
Red A side (+)
White B side (+) (Insert when using as double solenoid)
Black common wire (-)

Single negative common plug connector unit
Type: **JAZ-CM□**※

※ Lead wire length **Blank:** 300 mm [11.8 in.]
3: 3000 mm [118 in.]

FZ - □

Valve specification
For **T1, T2 ,T3, T4, T5, TA, TB,** or **TC**

Connector specification
CC1.5: Cabtyre cable, length 1500 mm [59 in.]※
CC3 : Cabtyre cable, length 3000 mm [118 in.]※

Notes:
1. When the valve specification is **T1**, select the **JAZ0-P-** □ single dedicated type.
2. When switching between the single and double type (**T1**/**T2**), purchase and use a dedicated connector for single or double use (the number of seal holes in the lead wire differs for the single and double type).
3. There is no white lead wire for the **JAZ0-P-** □ .
4. It is necessary to disassemble the connector to add a common connector assembly. Contact your nearest KOGANEI sales office.
5. For information on use in locations/atmospheres subject to substances other than water, such as organic solvents, cutting oil, or reagents, contact your nearest KOGANEI sales office.
6. For information on replacing the waterproof seal, contact your nearest KOGANEI sales office.

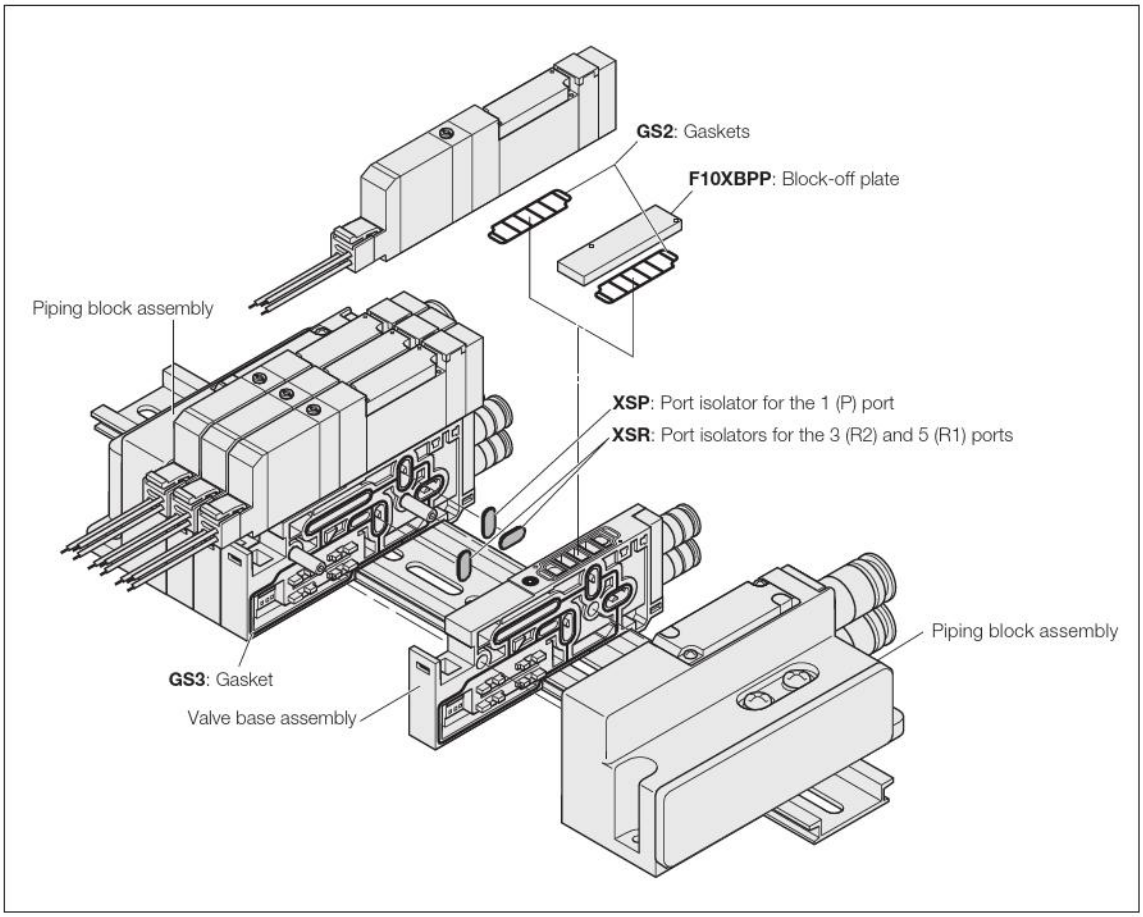

Manifold Order Code Example

(4 units of F10 Series)

F10M4XNJ-J6T-DR

stn.1 ~ 2 F10T0-A1-PS DC24V
stn.3 F10ZX-PJ6-TN
stn.4 F10T0-A1-PS DC24V

Note: This order code example has no relationship to the illustration above.

Precautions for Order Codes

●Orders for valves only

Place orders from "Single Valve Unit Order Codes" on p. 66.
However, **Blank**, **A2□**, **F3**, **F4□**, **F5**, **F6**, **F4A□**, **F4B□**, **F5A**, **F5B**, **F6A**, and **F6B** cannot be selected for the valve outlet type. And for the wiring specification, **Blank**, **PL**, and **PL3** cannot be selected. In addition, for common terminal wiring connections, separately order the common connector assemblies listed on the left.

F10 Series Easy Assembly Type Manifold Plug-in Type Order Codes

■ Manifold outlet specification

With dual use fitting blocks (base piping type)

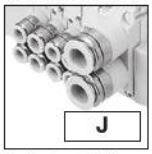

Outlet port fitting
F10: ϕ4, ϕ6

With selectable fittings (base piping type)

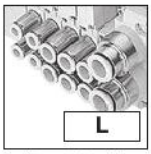

Outlet port should be selected in accordance with the manifold fitting specification.

With female thread blocks (base piping type)

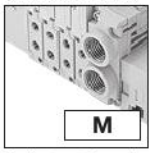

Outlet port female thread
F10: M5 x 0.8

With plates (direct piping type)

■ Pilot type

Blank
Internal pilot manifold

G
External pilot manifold

■ Piping block specification (air supply and exhaust)

Fitting block
-JR: Dual use fitting, right-side mounting
-JL: Dual use fitting, left-side mounting
-JD: Dual use fitting, both-side mounting
Fitting size (1(P), 3, 5(R) ports), ϕ6, ϕ8

Female thread block
-MR: Female thread, right-side mounting
-ML: Female thread, left-side mounting
-MD: Female thread, both-side mounting
Female thread size (1(P), 3, 5(R) ports), Rc1/8

Female thread block
-MRH: Female thread, right-side mounting Note15
-MLH : Female thread, left-side mounting Note15
-MDH: Female thread,both-side mounting Note15
Female thread size (1(P), 3, 5(R) ports), NPT1/8

Single size fitting block
-J5R : Single use fitting, right-side mounting
-J5L : Single use fitting, left-side mounting
-J5D : Single use fitting, both-side mounting
Fitting size (1(P), 3, 5(R) ports), ϕ6
-J6R : Single use fitting, right-side mounting
-J6L : Single use fitting, left-side mounting
-J6D : Single use fitting, both-side mounting
Fitting size (1(P), 3, 5(R) ports), ϕ8

Intermediate piping block
-JT : Dual use fitting, both-side mounting, intermediate piping block ϕ6, ϕ8
-J5T : Single use fitting, both-side mounting, intermediate piping block ϕ6
-J6T : Single use fitting, both-side mounting, intermediate piping block ϕ8
-MT : Female thread, both-side mounting, intermediate piping block Rc1/8
-MTH : Female thread, both-side mounting, intermediate piping block NPT1/8 Note15

■ Wiring specification (wiring block)

※ All wiring blocks are mounted on the left.

Flat cable connector (with socket and strain relief)

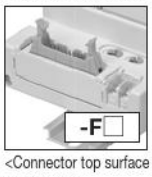

<Connector top surface wiring>
-F100 : 10-pin
-F100N: 10-pin without power terminal
-F101 : 10-pin
-F101N: 10-pin without power terminal
-F200 : 20-pin
-F200N: 20-pin without power terminal
-F201 : 20-pin
-F201N: 20-pin without power terminal
-F260 : 26-pin
-F260N: 26-pin without power terminal

<Connector side surface wiring>
-F100E : 10-pin
-F100EN: 10-pin without power terminal
-F101E : 10-pin
-F101EN: 10-pin without power terminal
-F200E : 20-pin
-F200EN: 20-pin without power terminal
-F201E : 20-pin
-F201EN: 20-pin without power terminal
-F260E : 26-pin
-F260EN: 26-pin without power terminal

For details, see p. 47.

D-sub connector

<Connector top surface wiring>
(M2.6 mounting screws)
-D250 : 25-pin Note14
-D250N : 25-pin without power terminal Note14
-D251 : 25-pin Note14
-D251N: 25-pin without power terminal Note14
(4-40 UNC mounting screws)
-D250U : 25-pin Note15
-D251U: 25-pin Note15
-D370NU : 37-pin without power terminal Note15

<Connector side surface wiring>
(M2.6 mounting screws)
-D250E : 25-pin Note14
-D250EN: 25-pin without power terminal Note14
-D251E : 25-pin Note14
-D251EN : 25-pin without power terminal Note14
(4-40 UNC mounting screws)
-D250EU : 25-pin Note15
-D251EU: 25-pin Note15

For details, see p. 47.

Terminal block
(19 terminals, M3 screws)

For details, see p.47.

■ Wiring connection specification

Blank
Packed wiring:
Specification of the valve base is always in accordance with the mounted valve specifications.

-W
Double wiring:
Valve base is always double wiring, regardless of the specifications of the mounted valve.

■ Common specification

Blank: Positive common
-CM : Negative common

■ Mounting specification

Blank
Direct mounting

-DN
With DIN bracket (no rail)

-DR
With DIN bracket, with rail
Caution: For information on rails assembled and shipped, see pages 146 and 147.

■ Valve size

F10M 10 mm [0.394 in.] width

■ Valve size

F10 Standard type
F10L Low-current type

Valve size	Valve units	Manifold type	Manifold outlet specification	Pilot specification	Piping block specification	Wiring specification	Wiring connection specification	Common specification	Mounting specification	Voltage
Manifold model										
Base piping type	F10M	XP (※Rc)	J M	Blank G	-JR -J5R -JT -JL -J5L -J5T -JD -J5D -J6T -MR -J6R -MT -ML -J6L -MD -J6D	-F100 -F260 -F101E -D250E -F100N -F260N -F101EN -D250EN -F101 -D250 -F200E -D251E -F101N -D250N -F200EN -D251EN -F200 -D251 -F201E -T200 -F200N -D251N -F201EN -F201 -F100E -F260E -F201N -F100EN -F260EN	Blank -W	Blank -CM	Blank -DN -DR	DC24V DC12V Note2
Base piping type selectable fitting	F10M	2 ⋮ □ Note1	XP (※Rc) XPH (※NPT) Note13	L	Blank G	-JR Note14 -MRH Note15 -J6L Note14 -JL Note14 -MLH Note15 -J5D Note14 -JD Note14 -MDH Note15 -J6D Note14 -MR Note14 -J5R Note14 -MTH Note15 -ML Note14 -J6R Note14 -MD Note14 -J5L Note14	-F100 -F260N -F100EN -D250E Note14 -F100N -D250 Note14 -F101E -D250EN Note14 -F101 -D250N Note14 -F101EN -D251E Note14 -F101N -D251 Note14 -F200E -D251EN Note14 -F200 -D251N Note14 -F200EN -D250EU Note15 -F200N -D250U Note15 -F201E -D251EU Note15 -F201 -D251U Note15 -F201EN -T200 -F201N -D370NU Note15 -F260E -F260 -F100E -F260EN	Blank -W	Blank -CM	Blank -DN -DR	DC24V DC12V Note2
Direct piping type	F10M	2 ⋮ □ Note1	XPH (※NPT) Note13	Blank	Blank G	-JR Note14 -MRH Note15 -J6L Note14 -JL Note14 -MLH Note15 -J5D Note14 -JD Note14 -MDH Note15 -J6D Note14 -MR Note14 -J5R Note14 -MTH Note15 -ML Note14 -J6R Note14 -MD Note14 -J5L Note14	-F100 -F260N -F100EN -D250E Note14 -F100N -D250 Note14 -F101E -D250EN Note14 -F101 -D250N Note14 -F101EN -D251E Note14 -F101N -D251 Note14 -F200E -D251EN Note14 -F200 -D251N Note14 -F200EN -D250EU Note15 -F200N -D250U Note15 -F201E -D251EU Note15 -F201 -D251U Note15 -F201EN -T200 -F201N -D370NU Note15 -F260E -F260 -F100E -F260EN	Blank -W	Blank -CM	Blank -DN -DR	DC24V DC12V Note2

Notes: 1. For the maximum number of units, see the table for maximum number of valve units by wiring specification, on p. 110.
2. Not available in low-current type.
3. Valve mounting location is from the left, with the solenoid on top, and the 4(A), 2(B) ports side in front.
4. When selecting **J**, **M**, or **L** (base piping type) for the manifold outlet specification, always enter **-A1** (with plate) for the valve outlet type.

Valve type

T0: 2-position, for single solenoid only
T1: 2-position, single solenoid specification
T2: 2-position, double solenoid specification
T3: 3-position, closed center
T4: 3-position, exhaust center
T5: 3-position, pressure center
TA: Tandem 3-port (NC and NC)Note10
TB: Tandem 3-port (NO and NO)Note10
TC: Tandem 3-port (NC and NO)Note10

Operation type

Blank
Internal pilot typeNote8

G
External pilot typeNote9
(for positive pressure)
※ No vacuum valve can be mounted.

Manual override

Manual override button

Manual override leverNote6

Valve type

-A1 With plateNote4 (base piping type)

5-port specification

-FJ With dual use fitting block (direct piping type) **F10**: ϕ4, ϕ6
-FJ5 With single use fitting block (direct piping type) **F10**: ϕ4
-FJ6 With single use fitting block (direct piping type) **F10**: ϕ6
-FM With female thread block (direct piping type) **F10**: M5 x 0.8
-FMH With female thread blockNote15 (direct piping type) **F10**: 10-32UNF

3-port specification

-FJ5A With single use fitting block, normally closed (NC) (direct piping type) **F10**: ϕ4
-FJ5B With single use fitting block, normally open (NO) (direct piping type) **F10**: ϕ4
-FJ6A With single use fitting block, normally closed (NC) (direct piping type) **F10**: ϕ6
-FJ6B With single use fitting block, normally open (NO) (direct piping type) **F10**: ϕ6
-FMA With female thread block, normally closed (NC) (direct piping type) **F10**: M5 x 0.8
-FMAH With female thread block, normally closed (NC)Note15 (direct piping type) **F10**: 10-32UNF
-FMB With female thread block, normally open (NO) (direct piping type) **F10**: M5 x 0.8
-FMBH With female thread block, normally open (NO)Note15 (direct piping type) **F10**: 10-32UNF

Caution: The 3-port specifications are only available in the valve specification **T0**, **T1**, and **T2**.

Manifold fitting specification

5-port specification

-J5 With single use fitting block (base piping type) **F10**: ϕ4
-J6 With single use fitting block (base piping type) **F10**: ϕ6
-M With female thread block (base piping type) **F10**: M5 x 0.8
-MH With female thread blockNote15 (base piping type) **F10**: 10-32UNF

3-port specification

-J5A With single use fitting block, normally closed (NC) (base piping type) **F10**: ϕ4
-J5B With single use fitting block, normally open (NO) (base piping type) **F10**: ϕ4
-J6A With single use fitting block, normally closed (NC) (base piping type) **F10**: ϕ6
-J6B With single use fitting block, normally open (NO) (base piping type) **F10**: ϕ6
-MA With female thread block, normally closed (NC) (base piping type) **F10**: M5 x 0.8
-MAH With female thread block, normally closed (NC)Note15 (base piping type) **F10**: 10-32UNF
-MB With female thread block, normally open (NO) (base piping type) **F10**: M5 x 0.8
-MBH With female thread block, normally open (NO)Note15 (base piping type) **F10**: 10-32UNF

Caution: The 3-port specifications are only available in the valve specification **T0**, **T1**, and **T2**.

Port isolator

Blank: No port isolator
-XSP: For 1(P) portNote7
-XSR: For 3(R2), 5(R1) portsNote7
-XSA: For 1(P), 3(R2), and 5(R1) portsNote7

Back pressure prevention valve

Blank
No back pressure prevention valve

-E2
With back pressure prevention valveNote11

Individual air supply and exhaust spacer

Blank: No spacer
-XPPM: Individual air supply spacer (with M5 female thread for F10)
-XPRM: Individual exhaust spacer (with M5 female thread for F10)

For details, see p.27.

Block-off plate wiring specification

Blank: Double wiring
-S: Single wiring

Station	Valve size	Valve specifications	Operation type	Manual override	Valve outlet type	Manifold fitting specification	Back pressure prevention valve	Individual air supply and exhaust spacer	Port isolator	Voltage / Block-off plate wiring specification
Valve type included										
stn. 1 ⋮ stn. □ Note3	F10 F10L	T0 T1 T2 T3 T4 T5 TA Note10 TB Note10 TC Note10	Blank Note8 G Note9	Blank -R Note6	-A1 Note4		Blank -E2 Note11	Blank -XPPM -XPRM	Blank -XSP Note7 -XSR Note7 -XSA Note7	DC24V DC12V Note2
	F10	XBPP (for block-off plate) Note5								Blank -S
When selecting the intermediate piping block, see page 106 when specifying it.										
stn. 1 ⋮ stn. □ Note3	F10 F10L	T0 T1 T2 T3 T4 T5 TA Note10 TB Note10 TC Note10	Blank Note8 G Note9	Blank -R Note6	-A1 Note4	-J5 Note12 -J6 Note12 -M Note12 -MH Note15 -J5A Note12 -J5B Note12 -J6A Note12 -J6B Note12 -MA Note12 -MAH Note15 -MB Note12 -MBH Note15	Blank -E2 Note11	Blank -XPPM -XPRM	Blank -XSP Note7 -XSR Note7 -XSA Note7	DC24V DC12V Note2
	F10	XBPP (for block-off plate) Note5								Blank -S
When selecting the intermediate piping block, see page 106 when specifying it.										
stn. 1 ⋮ stn. □ Note3	F10 F10L	T0 T1 T2 T3 T4 T5 TA Note10 TB Note10 TC Note10	Blank Note8 G Note9	Blank -R Note6	-FJ Note12 -FJ5 Note12 -FJ6 Note12 -FM Note12 -FMH Note15 -FJ5A Note12 -FJ5B Note12 -FJ6A Note12 -FJ6B Note12 -FMA Note12 -FMAH Note15 -FMB Note12 -FMBH Note15		Blank -E2 Note11	Blank -XPPM -XPRM	Blank -XSP Note7 -XSR Note7 -XSA Note7	DC24V DC12V Note2
	F10	XBPP (for block-off plate) Note5								Blank -S
When selecting the intermediate piping block, see page 108 when specifying it.										

Notes:
5. Select the block-off plate wiring in the block-off plate wiring connection specification.
6. When the valve specification is **T1** or **T2**, the manual override lever is placed only on the A side.
7. Port isolators can be installed only when piping blocks are mounted on both sides. In addition, only 1 port isolator can be mounted in 1 manifold for **-XSA**, or 1 each port isolator for **-XSP** and **-XSR** for a total of 2 locations. When shipping, the designated port isolators are mounted between the designated station and the station to its immediate left (the next smaller stn. No.).
8. Cannot be mounted on the external pilot manifold.
9. Cannot be mounted on the internal pilot manifold.
10. Not available in external pilot type.
11. Not available with the individual exhaust spacer.
12. The 3-port specifications are only available in the valve specification **T0**, **T1**, and **T2**.
13. Only L or Blank is available in the inch female thread specification and the manifold outlet specification.
14. Can be selected only when the manifold type is **XP**.
15. Can be selected only when the manifold type is **XPH**.

Intermediate piping block

(When mounting an intermediate piping block to the manifold, complete the following type and specify the station specified on page 107.)

F 10 ZX□ - □ - TK - □

Valve size
10: 10 mm [0.394 in.] width

Pilot specification
Blank: Internal pilot
G: External pilot

Manifold type
TK: For plug-in type

Port isolator
Blank: Internal pilot
XSP: Port isolator (1(P) port)
XSR: Port isolator (3(R2), 5(R1) ports)
XSA: Port isolator (1(P), 3(R2), and 5(R1) ports)

Piping block Specification Note
PJ : With dual use fitting $\phi 6$, $\phi 8$
PJ5 : With single use fitting $\phi 6$
PJ6 : With single use fitting $\phi 8$
PM : With female thread Rc 1/8
PMH : WIth female thread NPT 1/8

Note:See the following table for combinations of intermediate piping block port specifications and manifold piping block specifications.

Manifold piping specifications	Intermediate piping block
JT	PJ
J5T	PJ5
J6T	PJ6
MT	PM
MTH	PMH

Parts for manifold

F 10 ZX - □

Valve size
10: 10 mm [0.394 in.] width

Parts content
GS2: Gasket (gasket and exhaust valve)
GS3: Gasket (valve base side)
XSP: Port isolator (for 1(P) port)
XSR: Port isolator (for 3(R2), 5(R1) ports)
XSA: Port isolator (for 1(P), 3(R2), 5(R1) ports)
DN : DIN mounting bracket (1 set of 2)

Block-off plate (block-off plate, 2 mounting screws, and plug)

F 10 XBP P

Valve size
10: 10 mm [0.394 in.] width

For plug-in type

Valve base assembly (valve base, gasket, and 2 connecting rods for adding)

F 10 ZX - □ - □ - □ *For use with both internal pilot and external pilot

Valve size
10: 10 mm [0.394 in.] width

Common specification
Blank: For positive common
CM: For negative common

Wiring specification
S : For single wiring
W : For double wiring

Piping specifications
VJ : Dual use fitting valve base
VJ5 : Single use fitting valve base F10: ϕ4
VJ6 : Single diameter fitting valve base F10: ϕ6
VJ5A : 3-port specification normally closed, single use fitting valve base F10: ϕ4
VJ5B : 3-port specification normally open, single use fitting valve base F10: ϕ4
VJ6A : 3-port specification normally closed, single use fitting valve base F10: ϕ6
VJ6B : 3-port specification normally open, single use fitting valve base F10: ϕ6
VM : Female thread valve base F10: M5 x 0.8
VMA : 3-port specification normally closed, female thread valve base F10: M5 x 0.8
VMB : 3-port specification normally open, female thread valve base F10: M5 x 0.8
VMH : Female thread valve base F10:10-32UNF
VMAH : 3-port specification normally closed, female valve base F10:10-32UNF
VMBH : 3-port specification normally open, female valve base F10:10-32UNF
VP : Valve base plate

Back pressure prevention valve (2 pieces for split type, with dedicated gasket)

F 10 Z - E2

Valve size
10: 10 mm [0.394 in.] width

Individual air supply and exhaust spacer (Spacer for plug-in type, gasket, exhaust valve, and 2 mounting screws)

F 10 ZX - □

Valve size
10: 10 mm [0.394 in.] width

Specification
XPPM: Individual air supply spacer (with M5 female thread for F10)
XPRM: Individual exhaust spacer (with M5 female thread for F10)

※For details, see p.27.

Muffler

KM - J □

Fitting size
6: Outer diameter ϕ6 (for piping block)
8: Outer diameter ϕ8 (for piping block)
(Sales unit: Set of 10 mufflers)

DIN rail

DIN - □ (Unit:1)

Rail length
125: 125mm [4.921 in.]
⋮ (25 mm [0.984 in.] pitch)
525: 525mm [20.669 in.]

Piping block assembly (plug-in)

F 10 ZX□ - □ - □ - □ - □

Valve size
10: 10 mm [0.394 in.] width

Port isolator Note2
Blank: No port isolator
XSP: Port isolator (1(P) port)
XSR: Port isolator (3(R2), 5(R1) ports)
XSA: Port isolator (1(P), 3(R2), and 5(R1) ports)

Mounting specification Note3
Blank: Without DIN bracket
DN: With DIN bracket

Pilot specification
Blank: Internal pilot
G: External pilot

Manifold type
LK : Left side piping block (for plug-in type) with circuit board
RN : Right piping block, without circuit board
TK : Intermediate piping block (for plug-in type) with circuit board

Piping block Specification Note1
PJ : With dual use fitting ϕ6, ϕ8
PJ5: With single use fitting ϕ6
PJ6: With single use fitting ϕ8
PM : With female thread Rc 1/8
PMH : With female thread NPT 1/8
PP : Plate (without fitting)

Notes: 1.The fitting of the piping block is included. One set of two connecting rods is also included for a LN and TN type manifold.
2. Port isolator selection only available when the piping block name is TK.
3. Only when the manifold type is LK or RN.

Connecting rod (1 set of 2)

F 10 ZX - □ - □

Valve size
10: 10 mm [0.394 in.] width

Number of units
01 ~ 20: When type for valve base (RV) is selected
01: When type for left side piping block (RH) is selected
01: When type for intermediate piping block (RC) is selected

Specification
RV: For valve base
RH: For left piping block
RC: For intermediate piping block

Wiring block assembly (1 set)

FZX - □ - □

Common specification
Blank: Positive common
CM: Negative common

Wiring specification
F100 : Flat cable connector (DC specification)
F101 : Flat cable connector (DC specification)
F200 : Flat cable connector (DC specification)
F201 : Flat cable connector (DC specification)
F260 : Flat cable connector (DC specification)
D250 : D-sub connector (M2.6 screws)
D251 : D-sub connector (M2.6 screws)
F100N : Flat cable connector (DC specification), without power terminal
F101N : Flat cable connector (DC specification), without power terminal
F200N : Flat cable connector (DC specification), without power terminal
F201N : Flat cable connector (DC specification), without power terminal
F260N : Flat cable connector (DC specification), without power terminal
D250N : D-sub connector, without power terminal (M2.6 screws)
D251N : D-sub connector, without power terminal (M2.6 screws)
D250U : D-sub connector, (4-40UNC screws)
D250NU : D-sub connector, without power terminal (4-40UNC screws)
D251U : D-sub connector, (4-40UNC screws)
D251NU : D-sub connector, without power terminal (4-40UNC screws)
D370NU : D-sub connector, without power terminal (4-40UNC screws)
T200 : Terminal block, for left-side mounting

※ The above flat cable connectors and D-sub connectors can be switched between the top and side type.

■ Table for maximum number of valve units by wiring specification

		Maximum number of units ※	
		Wiring connection specification	
Wiring specification	Max. outputs	Packed wiring (Blank)	Double wiring (-W)
F100 □ Flat cable (10P)	8	Varies depending on the number of mounted single solenoids, double solenoids, and block-off plates. The number of controlled solenoids should be designated as the maximum number of outputs or less. D370NU is a maxmum of 20 units.	4 units
F101 □ Flat cable (10P)	8		4 units
F200 □ Flat cable (20P)	16		8 units
F201 □ Flat cable (20P)	16		8 units
F260 □ Flat cable (26P)	20		10 units
D250 □ D-sub connector (25P)	16		8 units
D251 □ D-sub connector (25P)	20		10 units
D370NU D-sub connector (37P)	32		16 units
T200 Terminal block (19 terminals)	18		9 units

※Note : When the intermediate piping block is selected, the maximum number of units will be added +1.

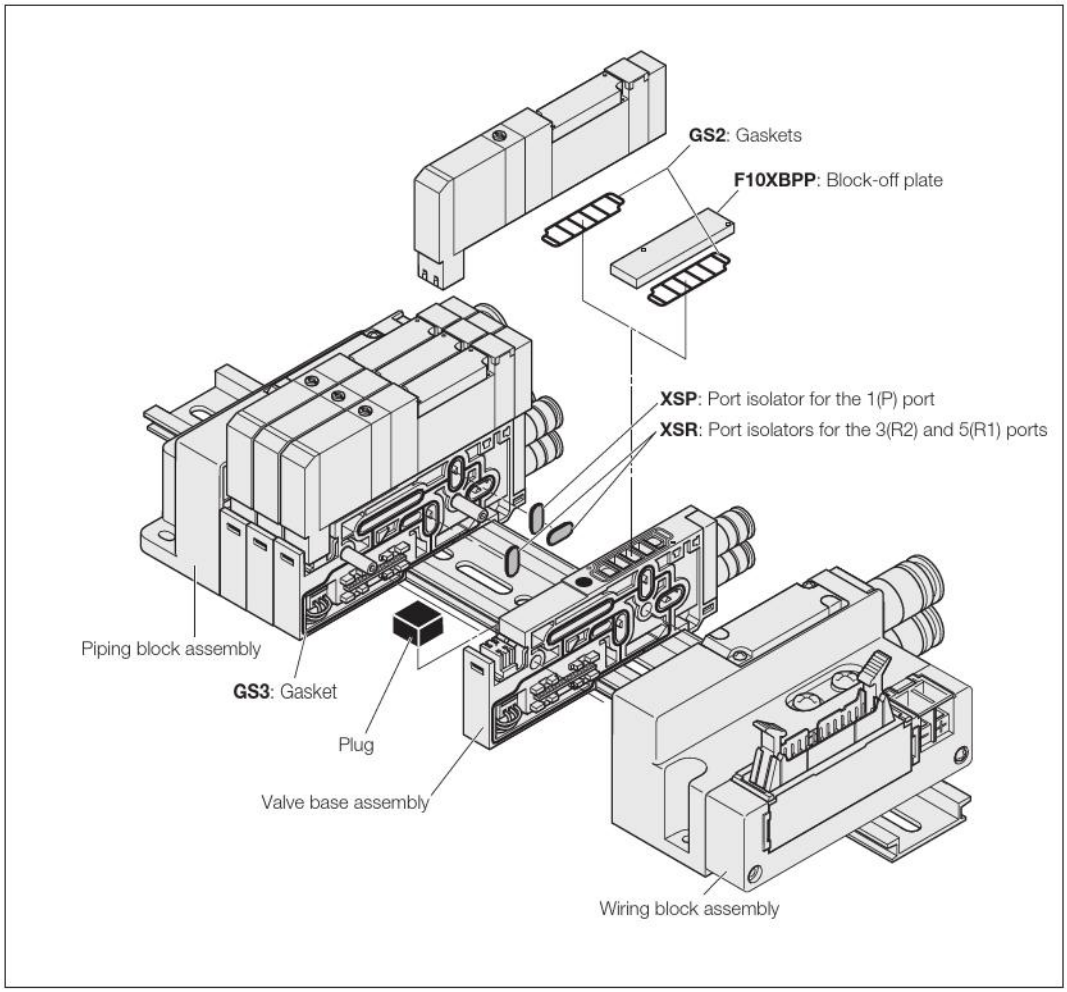

Manifold Order Code Example

(12 units of F10 Series)

F10M12XPL-J6T-F201-DR DC24V

stn.1 ~ 8 F10T1-A1-J5 DC24V
stn.9 F10ZX-PJ6-TK
stn.10 ~ 12 F10T1-A1-J5 DC24V

Note:This order code example has no relationship to the illustration above.

Precautions for Order Codes

● **Orders for valves only**

Place orders from "Single Valve Unit Order Codes" on p. 66.
However, **Blank**, **A2□, F3, F4□, F5, F6, F4A□, F4B□, F5A, F5B, F6A, or F6B** cannot be selected for the valve outlet type. For the wiring specification, **Blank** is the only selection.

● **Wiring connection specification**

Blank (packed wiring): Wiring is made in accordance with the mounted valve specifications.
-W (double wiring): Wiring is always for the double solenoid, regardless of the specifications of the mounted valve.

Caution

Single or double can also be selected as the block-off plate wiring specification separately from the manifold (valve) wiring specification.

F10 Series Easy Assembly Type Manifold Serial Transmission Type Order Codes

■ Manifold outlet specification

With dual use fitting blocks (base piping type)

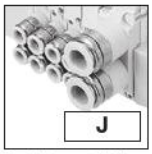

J

Outlet port fitting
F10: $\phi 4/\phi 6$

With selectable fittings (base piping type)

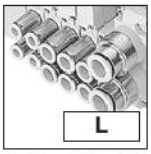

L

Outlet port should be selected in accordance with the manifold fitting specification.

With female thread blocks (base piping type)

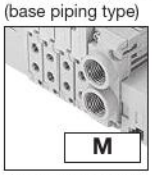

M

Outlet port female thread
F10: M5 x 0.8

With plates (direct piping type)

Blank

■ Pilot specification

Blank
Internal pilot manifold

G
External pilot manifold

■ Piping block specification (air supply and exhaust)

Fitting block
-JR: Dual use fitting, right-side mounting
-JL: Dual use fitting, left-side mounting
-JD: Dual use fitting, both-side mounting
Fitting size (1(P), 3, 5(R) ports), $\phi 6$, $\phi 8$

Female thread block
-MR: Female thread, right-side mounting
-ML: Female thread, left-side mounting
-MD: Female thread, both-side mounting
Female thread size (1(P), 3, 5(R) ports), Rc1/8

Female thread block
-MRH: Female thread, right-side mounting Note13
-MLH: Female thread, left-side mounting Note13
-MDH: Female thread,both-side mounting Note13
Female thread size (1(P), 3, 5(R) ports), NPT1/8

Single use fitting block
-J5R: Single use fitting, right-side mounting
-J5L: Single use fitting, left-side mounting
-J5D: Single use fitting, both-side mounting
Fitting size (1(P), 3, 5(R) ports), $\phi 6$

-J6R: Single use fitting, right-side mounting
-J6L: Single use fitting, left-side mounting
-J6D: Single use fitting, both-side mounting
Fitting size (1(P), 3, 5(R) ports), $\phi 8$

Intermediate piping block
-JT: Dual use fitting, both-side mounting, intermediate piping block $\phi 6$, $\phi 8$
-J5T: Single use fitting, both-side mounting, intermediate piping block $\phi 6$
-J6T: Single use fitting, both-side mounting, intermediate piping block $\phi 8$
-MT: Female thread, both-side mounting, intermediate piping block Rc1/8
-MTH: Female thread, both-side mounting, intermediate piping block NPT1/8 Note13

■ Transmission block specification

※ All transmission blocks are left-side mounting
※ These are the serial transmission block specifications compatible with each system.

●Block on the right photo is the case of B7A Link Terminal.
For details, see p. 41-44.

Integrated type
-B1: For CC-Link (16 outputs) Note2
-B3: For CC-Link (32 outputs) Note2
-D1: For DeviceNet (16 outputs)
-D3: For DeviceNet (32 outputs)
-H1: For CompoNet (16 outputs)
-K1: For EtherCAT (16 outputs)
-K3: For EtherCAT (32 outputs)
-M1: For EtherNet/IP (16 outputs) Note2
-M3: For EtherNet/IP (32 outputs) Note2

■ Wiring connection specification

Blank
Packed wiring: Specification of the valve base is always in accordance with the mounted valve specifications.

-W
Double wiring: Valve base is always double wiring, regardless of the specifications of the mounted valve.

■ Mounting specification

Blank
Direct mounting

-DN
With DIN bracket (no rail)

-DR
With DIN bracket, with rail
Caution: For information on rails assembled and shipped, see pages 151 and 152.

■ Valve size

F10 Standard type

F10L Low-current type

■ Valve size

F10M 10 mm [0.394 in.] width

Valve size	Valve units	Manifold type	Manifold outlet specification	Pilot specification	Piping block specification	Transmission block specification	Wiring connection specification	Mounting specification
Manifold type								
Base piping type	F10M	XS (※Rc)	J M	Blank G	-JR -J5R -JT -JL -J5L -J5T -JD -J5D -J6T -MR -J6R -MT -ML -J6L -MD -J6D	-B1 Note2 -D3 -K3 -B3 Note2 -H1 -M1 Note2 -D1 -K1 -M3 Note2	Blank -W	Blank -DN -DR
Base piping type selectable fitting	F10M	2 ⋮ □ Note1	XS (※Rc) XSH (※NPT) Only L or Blank is available in the inch female thread specification and the manifold outlet specification.	L	Blank G	-JR -MLH Note13 -J6D -JL -MDH Note13 -JT -JD -J5R -J5T -MR -J5L -J6T -ML -J5D -MT -MD -J6R -MTH Note13 -MRH Note13 -J6L	-B1 Note2 -D3 -K3 -B3 Note2 -H1 -M1 Note2 -D1 -K1 -M3 Note2	Blank -W	Blank -DN -DR
Direct piping type	F10M	2 ⋮ □ Note1	XS (※Rc) XSH (※NPT) Only L or Blank is available in the inch female thread specification and the manifold outlet specification.	Blank	Blank G	-JR -MLH Note13 -J6D -JL -MDH Note13 -JT -JD -J5R -J5T -MR -J5L -J6T -ML -J5D -MT -MD -J6R -MTH Note13 -MRH Note13 -J6L	-B1 Note2 -D3 -K3 -B3 Note2 -H1 -M1 Note2 -D1 -K1 -M3 Note2	Blank -W	Blank -DN -DR

Notes 1. To determine the maximum number of units, see the table for maximum number of valve units by transmission block specification, on p. 116.
2. Complies with the CE marking regulation.

Valve specification

T0 : 2-position, for single solenoid only
T1 : 2-position, single solenoid specification
T2 : 2-position, double solenoid specification
T3 : 3-position, closed center
T4 : 3-position, exhaust center
T5 : 3-position, pressure center
TA : Tandem 3-port (NC and NC)Note10
TB : Tandem 3-port (NO and NO)Note10
TC : Tandem 3-port (NC and NO)Note10

Operation type

Blank
Internal pilot typeNote8

G
External pilot typeNote9
(for positive pressure)
※ No vacuum valve can be mounted.

Manual override

Manual override button

Manual override leverNote6

Valve outlet type

-A1 With plateNote4 (base piping type)

5-port specification

-FJ With dual use fitting block (direct piping type) **F10**: ϕ4, ϕ6
-FJ5 With single use fitting block (direct piping type) **F10**: ϕ4
-FJ6 With single use fitting block (direct piping type) **F10**: ϕ6
-FM With female thread block (direct piping type) **F10**: M5 x 0.8
-FMH With female thread blockNote13 (direct piping type) **F10**: 10-32UNF

3-port specification

-FJ5A With single use fitting block, normally closed (NC) (direct piping type) **F10**: ϕ4
-FJ5B With single use fitting block, normally open (NO) (direct piping type) **F10**: ϕ4
-FJ6A With single use fitting block, normally closed (NC) (direct piping type) **F10**: ϕ6
-FJ6B With single use fitting block, normally open (NO) (direct piping type) **F10**: ϕ6
-FMA With female thread block, normally closed (NC) (direct piping type) **F10**: M5 x 0.8
-FMAH With female thread block, normally closed (NC)Note13 (direct piping type) **F10**: 10-32UNF
-FMB With female thread block, normally open (NO) (direct piping type) **F10**: M5 x 0.8
-FMBH With female thread block, normally open (NO)Note13 (direct piping type) **F10**: 10-32UNF

Caution: The 3-port specifications are only available in the valve specification **T0**, **T1**, and **T2**.

Manifold fitting specification

5-port specification

-J5 With single use fitting block (base piping type) **F10**: ϕ4
-J6 With single use fitting block (base piping type) **F10**: ϕ6
-M With female thread block (base piping type) **F10**: M5 x 0.8
-MH With female thread blockNote13 (base piping type) **F10**: 10-32UNF

3-port specification

-J5A With single use fitting block, normally closed (NC) (base piping type) **F10**: ϕ4
-J5B With single use fitting block, normally open (NO) (base piping type) **F10**: ϕ4
-J6A With single use fitting block, normally closed (NC) (base piping type) **F10**: ϕ6
-J6B With single use fitting block, normally open (NO) (base piping type) **F10**: ϕ6
-MA With female thread block, normally closed (NC) (base piping type) **F10**: M5 x 0.8
-MAH With female thread block, normally closed (NC)Note13 (base piping type) **F10**: 10-32UNF
-MB With female thread block, normally open (NO) (base piping type) **F10**: M5 x 0.8
-MBH With female thread block, normally open (NO)Note13 (base piping type) **F10**: 10-32UNF

Caution: The 3-port specifications are only available in the valve specification **T0**, **T1**, and **T2**.

Port isolator

Blank: No port isolator
-XSP: For 1 (P) portNote7
-XSR: For 3(R2), 5(R1) portsnote7
-XSA:For 1(P), 3(R2), and 5(R1)Note7

Back pressure prevention valve

Blank
No back pressure prevention valve

-E2
With back pressure prevention valveNote11

Individual air supply and exhaust spacer

Blank: Without spacer
-XPPM: Individual air supply spacer (with M5 female thread for F10)
-XPRM: Individual exhaust spacer (with M5 female thread for F10)

For details, see p.27.

Block-off plate wiring specification

Blank: Double wiring
-S: Single wiring

Station	Valve Size	Valve specification	Operation type	Manual override	Valve outlet type	Manifold fitting specification	Back pressure prevention valve	Individual air supply and exhaust spacer	Port isolator	Voltage / Block-off plate wiring specification
Mounting valve model										
stn. 1 ⋮ stn.□ Note3	F10 F10L	T0 T3 TANote10 T1 T4 TBNote10 T2 T5 TCNote10	BlankNote8 GNote9	Blank -RNote6	-A1Note4		Blank -E2Note11	Blank -XPPM -XPRM	Blank -XSPNote7 -XSRNote7 -XSANote7	DC24V Blank -S
	F10	XBPP (for block-off plate)Note3								
When selecting the intermediate piping block, see page 112 when specifying it.										
stn. 1 ⋮ stn.□ Note3	F10 F10L	T0 T3 TANote10 T1 T4 TBNote10 T2 T5 TCNote10	BlankNote8 GNote9	Blank -RNote6	-A1Note4	-J5Note12 -J6ANote12 -J6Note12 -J6BNote12 -MNote12 -MANote12 -MHNote13 -MAHNote13 -J5ANote12 -MBNote12 -J5BNote12 -MBHNote13	Blank -E2Note11	Blank -XPPM -XPRM	Blank -XSPNote7 -XSRNote7 -XSANote7	DC24V Blank -S
	F10	XBPP (for block-off plate)Note3								
When selecting the intermediate piping block, see page 112 when specifying it.										
stn. 1 ⋮ stn.□ Note3	F10 F10L	T0 T3 TANote10 T1 T4 TBNote10 T2 T5 TCNote10	BlankNote8 GNote9	Blank -RNote6	-FJNote12 -FJ6ANote12 -FJ5Note12 -FJ6BNote12 -FJ6Note12 -FMANote12 -FMNote12 -FMAHNote13 -FMHNote13 -FMBNote12 -FJ5ANote12 -FMBHNote13 -FJ5BNote12		Blank -E2Note11	Blank -XPPM -XPRM	Blank -XSPNote7 -XSRNote7 -XSANote7	DC24V Blank -S
	F10	XBPP (for block-off plate)Note5								
When selecting the intermediate piping block, see page 114 when specifying it.										

Notes: 3. Valve mounting location is from the left, with the solenoid on top, and the 4(A), 2(B) ports side in front.
4. When selecting **J**, **M**, or **L** (base piping type) for the manifold outlet specifications, always enter **-A1** (with plate) for the valve outlet type.
5. Single or double can also be selected as the block-off plate wiring specification separately from the manifold (valve) wiring specification.
6. When the valve specification is **T1** or **T2**, the manual override lever is placed only on the A side.
7. Port isolators can be installed only when piping blocks are mounted on both sides. In addition, only 1 port isolator can be mounted in 1 manifold for **-XSA**, or 1 each port isolator for **-XSP** and **-XSR** for a total of 2 locations. When shipping, the designated port isolators are mounted between the designated station and the station to its immediate left (the next smaller stn. No.).
8. Cannot be mounted on the external pilot manifold.
9. Cannot be mounted on the internal pilot manifold.
10. Not available in external pilot type.
11. Not available with the individual exhaust spacer.
12. The 3-port specifications are only available in the valve specification **T0**, **T1**, and **T2**.
13. Can be selected only when the manifold type is **XSH**.

Intermediate piping block

(When mounting an intermediate piping block to the manifold, complete the following type and specify the station specified on page 113.)

F 10 ZX□ - □ - TK - □

Valve size
10: 10 mm
[0.394 in.] width

Pilot specification
Blank: Internal pilot
G: External pilot type

Piping block Specification Note
PJ : With dual use fitting ϕ6, ϕ8
PJ5 : With single use fitting ϕ6
PJ6 : With single use fitting ϕ8
PM : With female thread Rc 1/8
PMH : WIth female thread NPT 1/8

Manifold type
TK: Plug-in type, for serial transmission

Port isolator
Blank : Without split
XSP : Port isolator (1(P) port)
XSR : Port isolator (3(R2), 5(R1) ports)
XSA : Port isolator (1(P), 3(R2), and 5(R1) ports)

Note:See the following table for combinations of intermediate piping block port specifications and manifold piping block specifications.

Manifold piping specifications	Intermediate piping block
JT	PJ
J5T	PJ5
J6T	PJ6
MT	PM
MTH	PMH

Parts for manifold

F 10 ZX - □

Valve size
10: 10 mm [0.394 in.] width

Parts content
GS2 : Gasket (gasket and exhaust valve)
GS3 : Gasket (valve base side)
XSP : Port isolator (for 1(P) port)
XSR : Port isolator (for 3(R2), 5(R1) ports)
XSA : Port isolator (for 1(P), 3(R2), 5(R1) ports)
DN : DIN mounting bracket (one set of two)

Block-off plate (block-off plate, 2 mounting screws, and plug)

F 10 XBPP

Valve size
10: 10 mm [0.394 in.] width

Back pressure prevention valve (2 units for split type, with dedicated gasket)

F 10 Z - E2

Valve size
10: 10 mm [0.394 in.] width

Individual air supply and exhaust spacer (Spacer for plug-in type, gasket, exhaust valve, and 2 mounting screws)

F 10 ZX - □

Valve size
10: 10 mm [0.394 in.] width

Specifications
XPPM: Individual air supply spacer (with M5 female thread for F10)
XPRM: Individual exhaust spacer (with M5 female thread for F10)

※For details, see p.27.

Valve base assembly (valve base, gasket, and 2 connecting rods for adding)

F 10 ZX - □ - □ - □ ※For use with both internal pilot and external pilot

Valve size
10: 10 mm [0.394 in.] width

Common specification
Blank: For positive common

Wiring specification
S : For single wiring
W : For double wiring

Piping specification
VJ : Dual use fitting valve base
VJ5 : Single use fitting valve base F10: ϕ4
VJ6 : Single diameter fitting valve base F10: ϕ6
VJ5A : 3-port specification normally closed, single use fitting valve base F10: ϕ4
VJ5B : 3-port specification normally open, single use fitting valve base F10: ϕ4
VJ6A : 3-port specification normally closed, single use fitting valve base F10: ϕ6
VJ6B : 3-port specification normally open, single use fitting valve base F10: ϕ6
VM : Female thread valve base F10: M5 x 0.8
VMA : 3-port specification normally closed, female thread valve base F10: M5 x 0.8
VMB : 3-port specification normally open, female thread valve base F10: M5 x 0.8
VMH : Female thread valve base F10:10-32UNF
VMAH : 3-port specification normally closed, female valve base F10:10-32UNF
VMBH : 3-port specification normally open, female valve base F10:10-32UNF
VP : Valve base plate

Muffler

KM - J □

Fitting size
6: Outer diameter ϕ6 (for piping block)
8: Outer diameter ϕ8 (for piping block)

DIN rail

DIN - □ (Unit:1)

Rail length
125: 125mm [4.921 in.]
⋮ (25 mm [0.984 in.] pitch)
525: 525mm [20.669 in.]

Connecting rod (1 set of 2)

F 10 ZX - □ - □

Valve size
10: 10 mm [0.394 in.] width

Number of units
01 ~ **20**: When type for valve base (RV) is selected
01 : When type for left side piping block (RH) is selected
01 : When type for intermediate piping block (RC) is selected

Specification
RV : For valve base
RH: For left piping block
RC: For intermediate piping block

Piping block assembly (plug-in)

F 10 ZX□ - □ - □ - □ - □

Valve size
10: 10 mm [0.394 in.] width

Pilot specification
Blank: Internal pilot
G: External pilot type

Piping block specification[Note1]
PJ : With dual use fitting ϕ6, ϕ8
PJ5: With single use fitting ϕ6
PJ6: With single use fitting ϕ8
PM : With female thread Rc 1/8
PMH : With female thread NPT 1/8
PP : Plate (without fitting)

Manifold type
LK : Left side piping block (for plug-in type) with circuit board
RN : Right piping block, without circuit board
TK : Intermediate piping block (for plug-in type) with circuit board

Port isolator[Note2]
Blank: No port isolator
XSP: Port isolator (1(P) port)
XSR: Port isolator (3(R2), 5(R1) ports)
XSA: Port isolator (1(P), 3(R2), and 5(R1) ports)

Mounting specification[Note3]
Blank: Without DIN bracket
DN: With DIN bracket

Notes: 1. The fitting of the piping block is included. One set of two connecting rods is also included for a LN and TN type manifold.
2. Port isolator selection only available when the piping block name is TK.
3. Only when the manifold type is LK or RN.

Serial transmission block (single unit)

YS6 □ (dedicated for manifold mounting)

Transmission block specification
B1: For CC-Link (16 outputs)
B3: For CC-Link (32 outputs)
D1: For DeviceNet (16 outputs)
D3: For DeviceNet (32 outputs)
H1: For CompoNet (16 outputs)

YS7 □ L (dedicated for manifold mounting)

Wiring position
L: Left-side mounting

Transmission block specification
K1: For EtherCAT (16 outputs)
K3: For EtherCAT (32 outputs)
M1: For EtherNet/IP (16 outputs)
M3: For EtherNet/IP (32 outputs)

■ Table for maximum number of valve units by transmission block specification

		Maximum number of units ※	
		Wiring connection specification	
Transmission block specifications	Max. outputs	Packed wiring (Blank)	Double wiring (**-W**)
-B1: For CC-Link (16 outputs)	16	Varies depending on the number of mounted single solenoids, double solenoids, and block-off plates. The number of controlled solenoids should be designated as the maximum number of outputs or less. **-B3**, **-D3**, **-K3**, and **-M3** are a maximum of 20 units.	8 units
-B3: For CC-Link (32 outputs)	32		16 units
-D1: For DeviceNet (16 outputs)	16		8 units
-D3: For DeviceNet (32 outputs)	32		16 units
-H1: For CompoNet (16 outputs)	16		8 units
-K1: For EtherCAT (16 outputs)	16		8 units
-K3: For EtherCAT (32 outputs)	32		16 units
-M1: For EtherNet/IP (16 outputs)	16		8 units
-M3: For EtherNet/IP (32 outputs)	32		16 units

※Note : When the intermediate piping block is selected, the maximum number of units will be added +1.

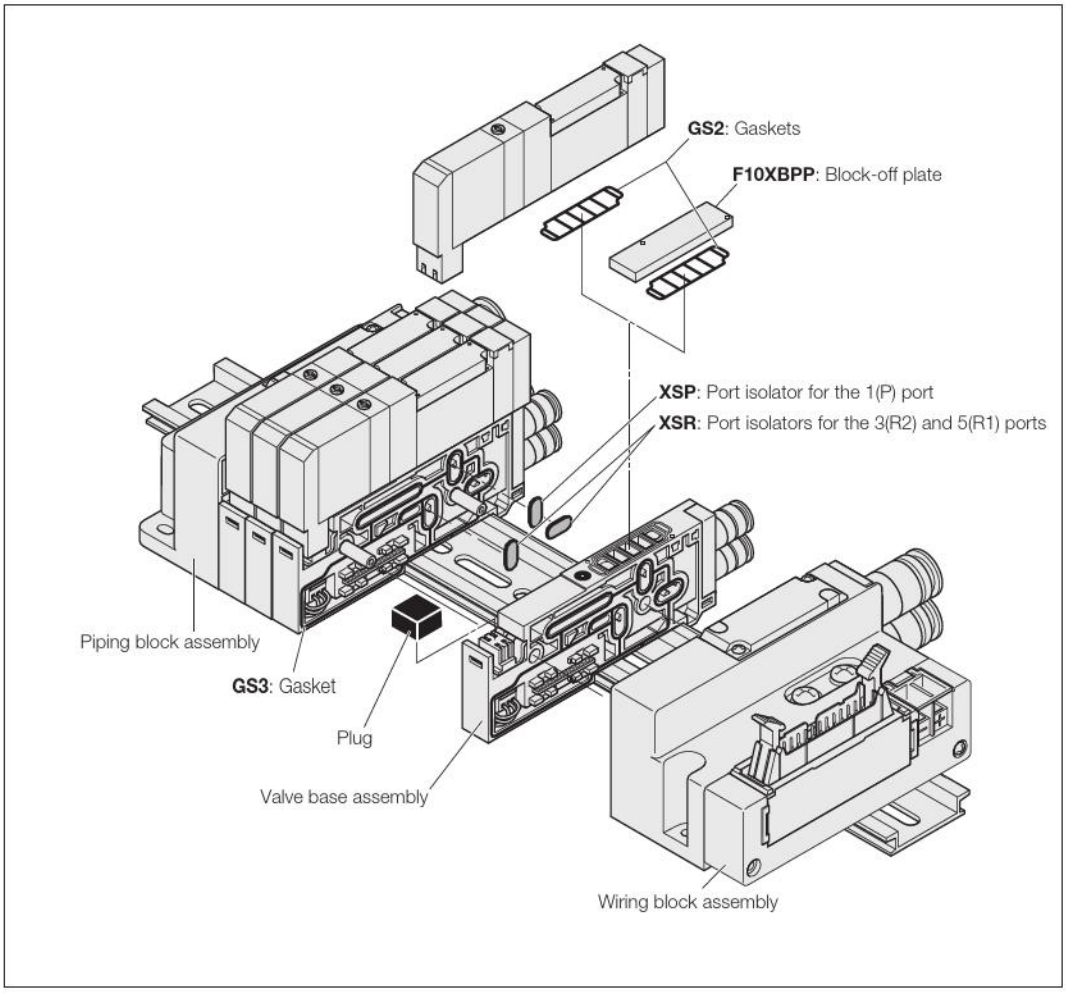

Manifold Order Code Example

(8 units of F10 Series)

F10M8XSL-J5R-B1-W

stn.1 ~ 5 F10T0-A1-J5 DC24V
stn.6 ~ 7 F10T2-A1-J6 DC24V
stn.8 F10XBPP-J6

Note: This order code example has no relationship to the illustration above.

Precautions for Order Codes

● **Orders for valves only**

Place orders from "Single Valve Unit Order Codes" on p. 66.
However, **Blank**, **A2□, F3, F4□, F5, F6, F4A□, F4B□, F5A, F5B, F6A, or F6B** cannot be selected for the valve outlet type. For the wiring specification, **Blank** is the only selection.

● **Wiring connection specification**

Blank (packed wiring): Wiring is made in accordance with the mounted valve specifications.
-W (double wiring): Wiring is always for the double solenoid, regardless of the specifications of the mounted valve.

Caution

Single or double can also be selected as the block-off plate wiring specification separately from the manifold (valve) wiring specification.

F10T Valve specifications -F3-PS

With outlet port dual use fitting block
With inlet port female thread block
S type plug connector

* For T0 Type dimensions, see page 119.

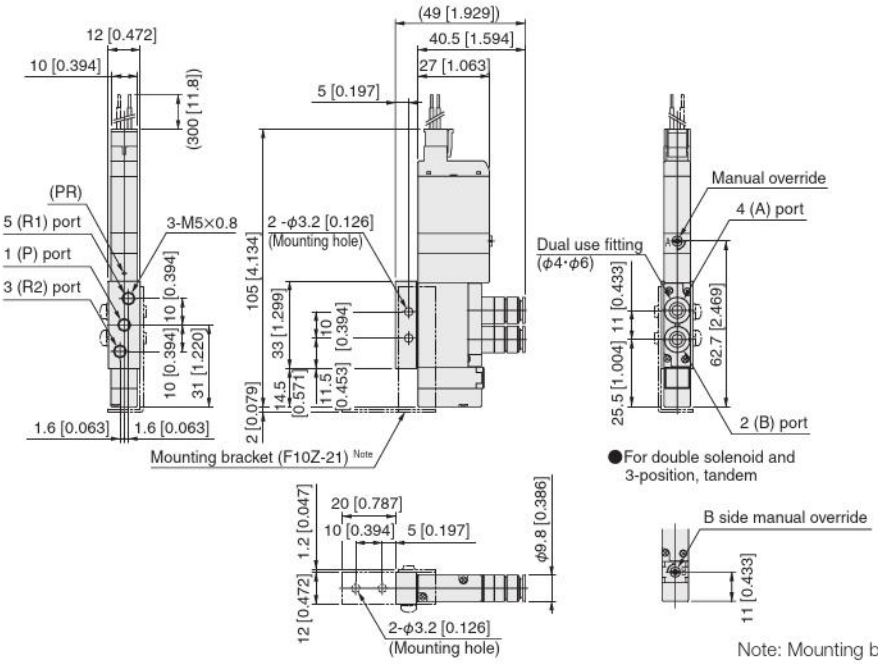

Note: Mounting brackets are additional parts (options).

F10T Valve specifications -F4-PS
F10T Valve specifications -F4H-PS

With outlet port female thread block
With inlet port female thread block
S type plug connector

* For T0 Type dimensions, see page 119.

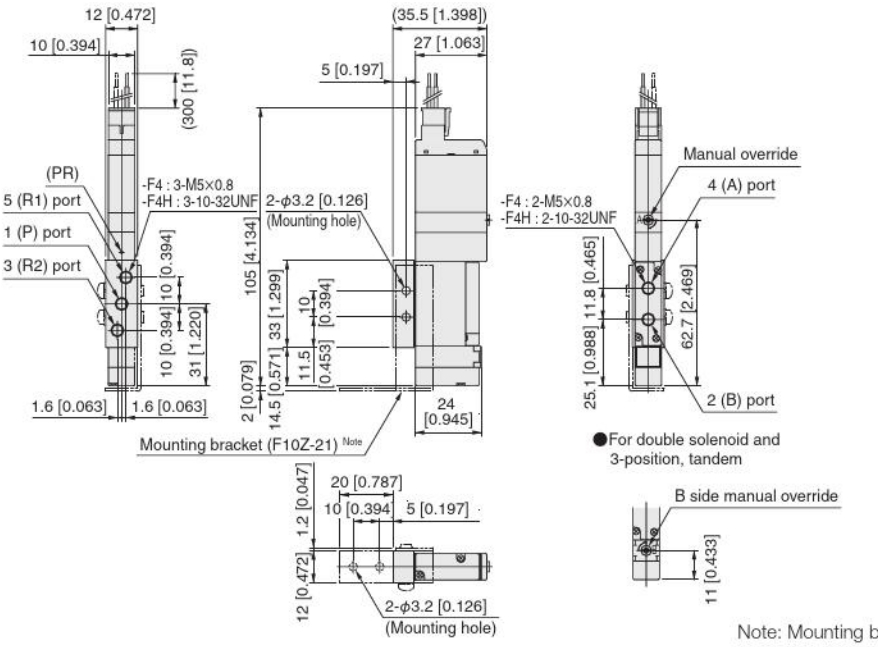

Note: Mounting brackets are additional parts (options).

F10T0-F□-PS

With outlet port single use fitting block
With inlet port female thread block
S type plug connector

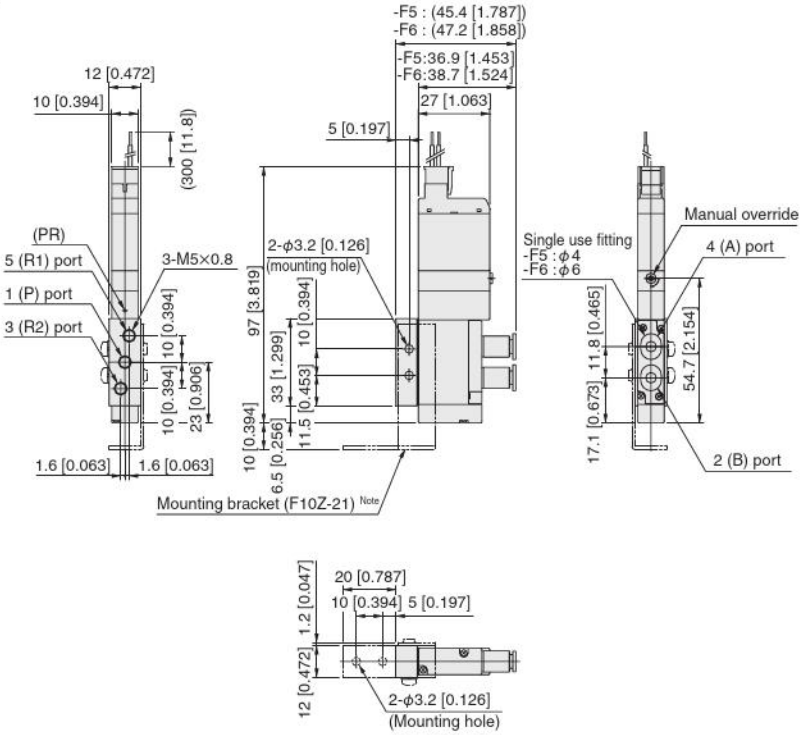

Note: Mounting brackets are additional parts (options).

IP type

F10T Valve specifications Operation system -P-A2-PS

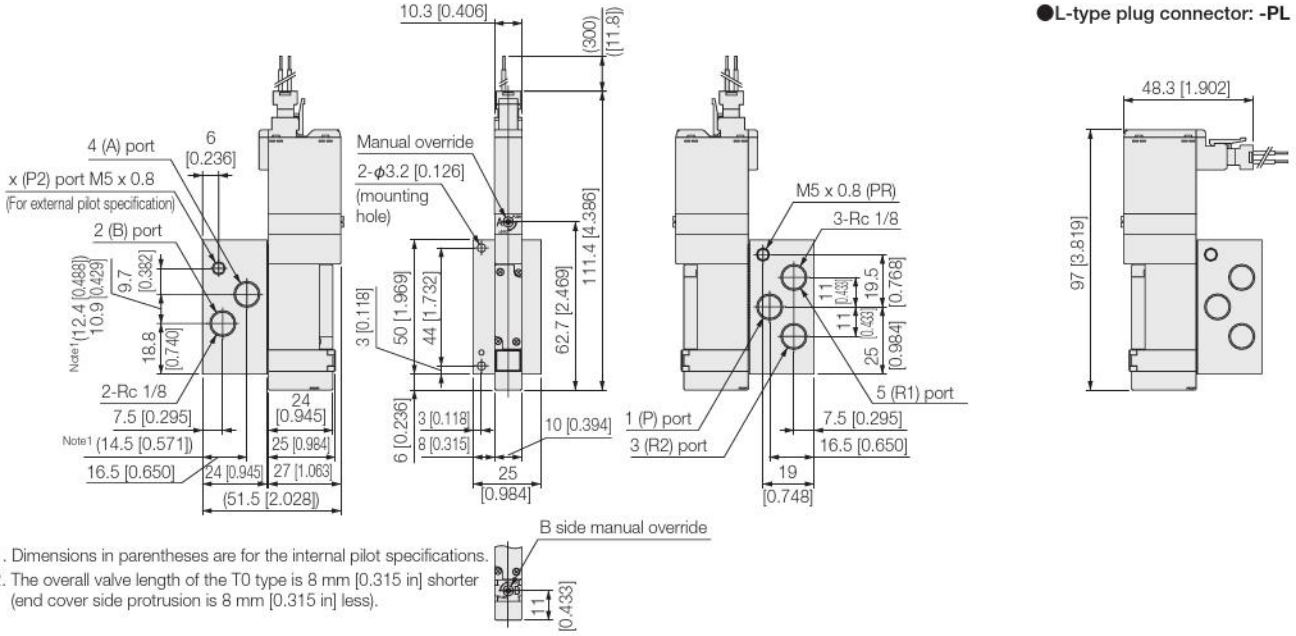

Notes: 1. Dimensions in parentheses are for the internal pilot specifications.
2. The overall valve length of the T0 type is 8 mm [0.315 in] shorter (end cover side protrusion is 8 mm [0.315 in] less).

For double solenoid and 3-position, tandem

F10T Valve specifications Operation system -A2-PS
F10T Valve specifications Operation system -A2H-PS

With A-type sub-base
S type plug connector

● Internal pilot specifications

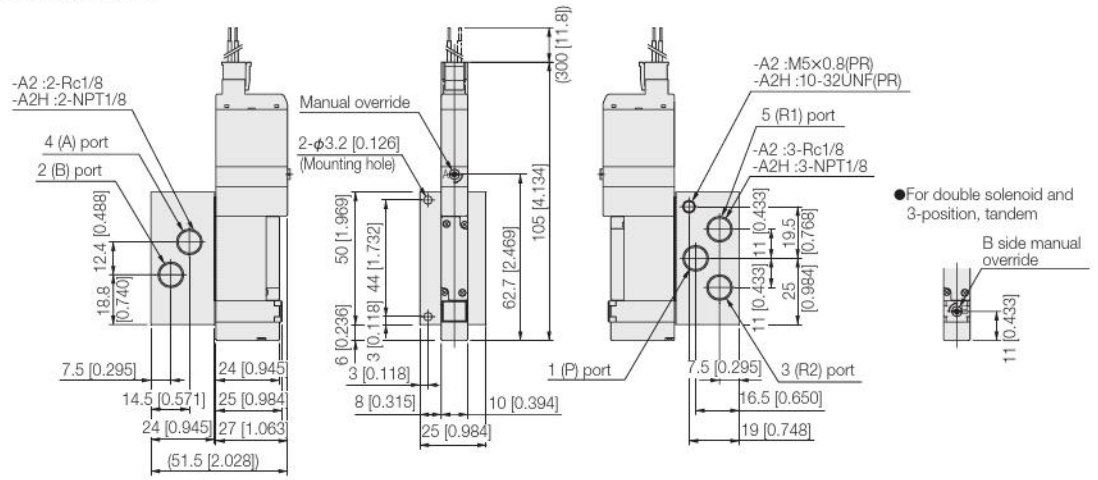

Note: The overall valve length of the T0 type is 8 mm [0.315 in] shorter (end cover side protrusion is 8 mm [0.315 in] less).

● External pilot specifications

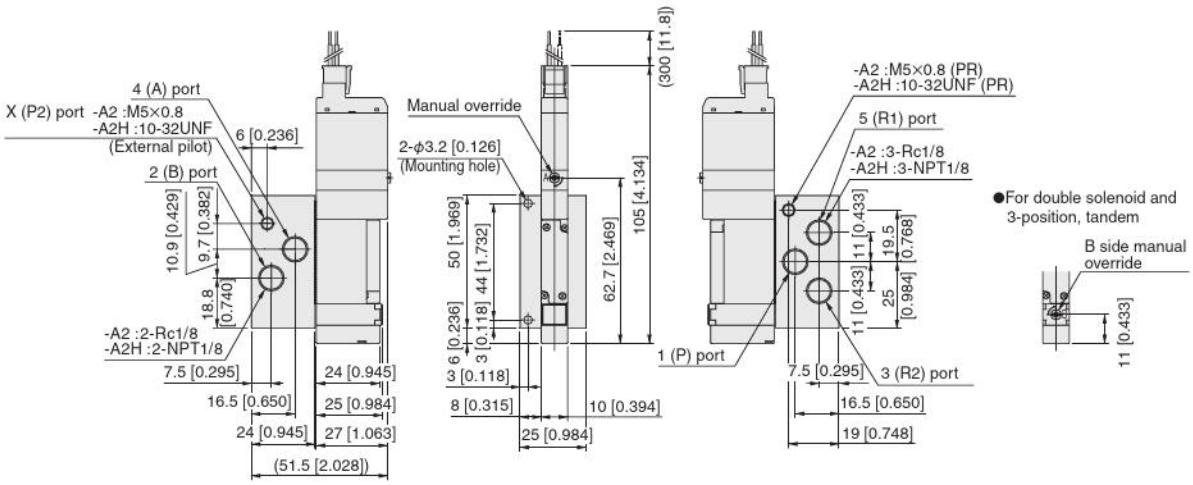

Note: The overall valve length of the T0 type is 8 mm [0.315 in] shorter (end cover side protrusion is 8 mm [0.315 in] less).

Options

● L-type plug connector: **-PL**

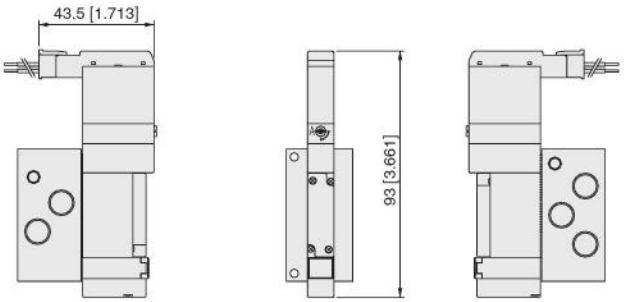

● Manual lever: **-R**

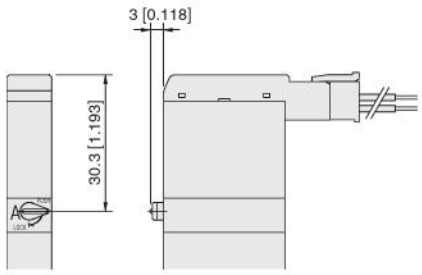

Note: The overall valve length of the T0 type is 8 mm [0.315 in] shorter (end cover side protrusion is 8 mm [0.315 in] less).

F10M [Number of valves] A J/M/L [Pilot specifications] (Base piping type)

Monoblock manifold A type
With manifold outlet port dual use fitting block
S type plug connector

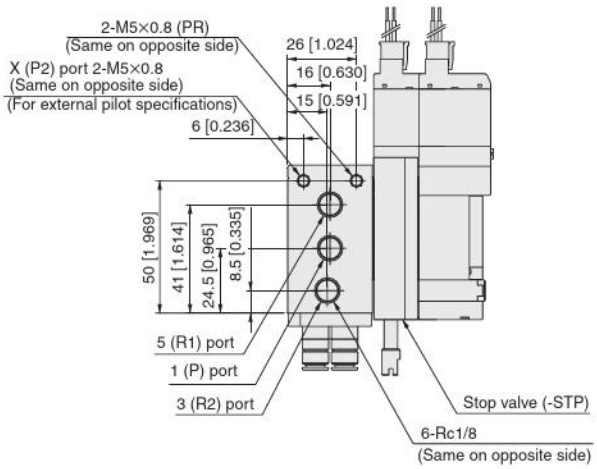

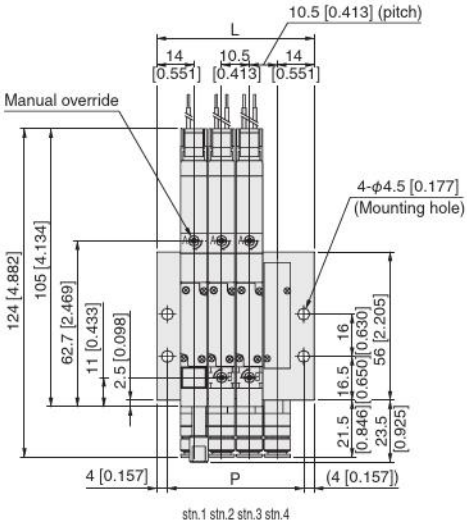

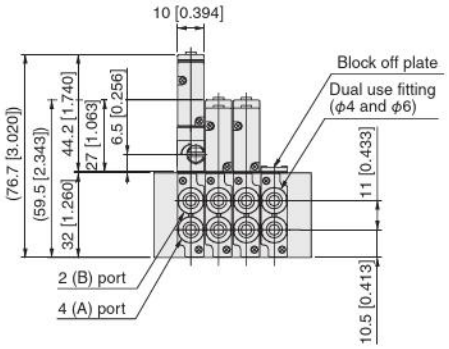

Unit dimensions

Number of units	L	P
2	38.5 [1.516]	30.5 [1.201]
3	49.0 [1.929]	41.0 [1.614]
4	59.5 [2.343]	51.5 [2.028]
5	70.0 [2.756]	62.0 [2.441]
6	80.5 [3.169]	72.5 [2.854]
7	91.0 [3.583]	83.0 [3.268]
8	101.5 [3.996]	93.5 [3.681]
9	112.0 [4.409]	104.0 [4.094]
10	122.5 [4.823]	114.5 [4.508]
11	133.0 [5.236]	125.0 [4.921]
12	143.5 [5.650]	135.5 [5.335]
13	154.0 [6.063]	146.0 [5.748]
14	164.5 [6.476]	156.5 [6.161]
15	175.0 [6.890]	167.0 [6.575]
16	185.5 [7.303]	177.5 [6.988]
17	196.0 [7.717]	188.0 [7.402]
18	206.5 [8.130]	198.5 [7.815]
19	217.0 [8.543]	209.0 [8.228]
20	227.5 [8.957]	219.5 [8.642]

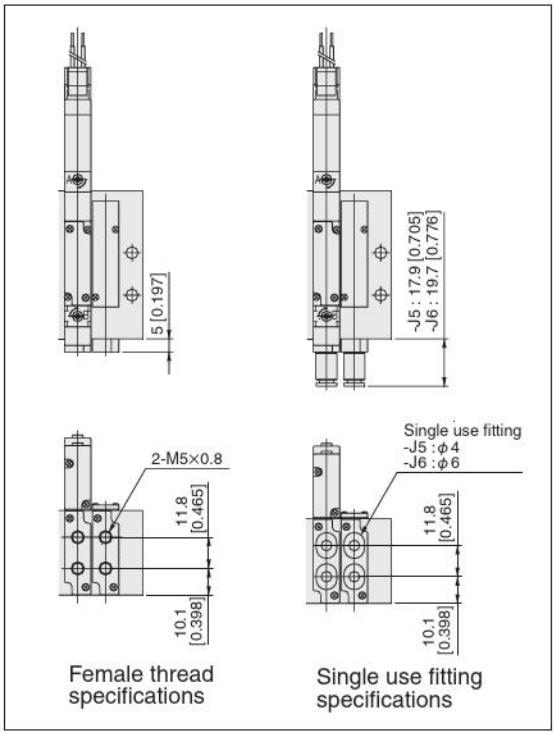

F10M Number of valves F (Direct piping type)

Monoblock manifold F type
With valve outlet port dual use fitting block
S type plug connector

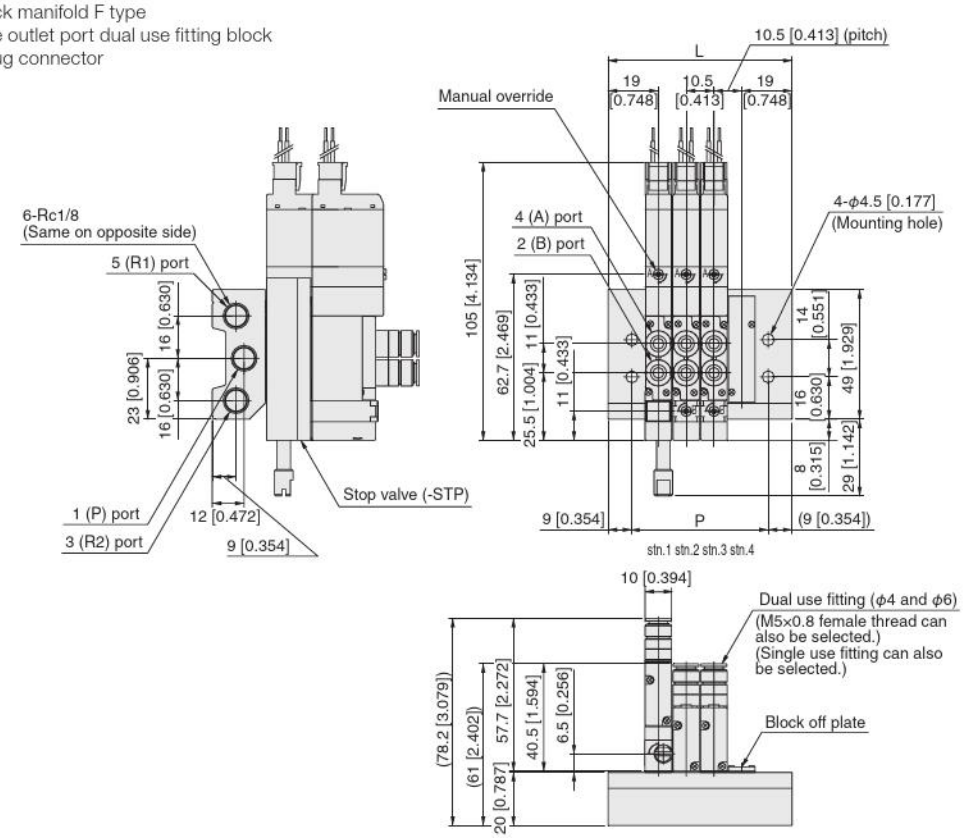

Note: The overall valve length of the T0 type is 8 mm [0.315 in] shorter (end cover side protrusion is 8 mm [0.315 in] less).

Unit dimensions

Number of units	L	P
2	48.5 [1.909]	30.5 [1.201]
3	59.0 [2.323]	41.0 [1.614]
4	69.5 [2.736]	51.5 [2.028]
5	80.0 [3.150]	62.0 [2.441]
6	90.5 [3.563]	72.5 [2.854]
7	101.0 [3.976]	83.0 [3.268]
8	111.5 [4.390]	93.5 [3.681]
9	122.0 [4.803]	104.0 [4.094]
10	132.5 [5.217]	114.5 [4.508]
11	143.0 [5.630]	125.0 [4.921]
12	153.5 [6.043]	135.5 [5.335]
13	164.0 [6.457]	146.0 [5.748]
14	174.5 [6.870]	156.5 [6.161]
15	185.0 [7.283]	167.0 [6.575]
16	195.5 [7.697]	177.5 [6.988]
17	206.0 [8.110]	188.0 [7.402]
18	216.5 [8.524]	198.5 [7.815]
19	227.0 [8.937]	209.0 [8.228]
20	237.5 [9.350]	219.5 [8.642]

F10M Number of valves FH (Direct piping type)

Monoblock manifold F type
With valve outlet port female thread block
S type plug connector

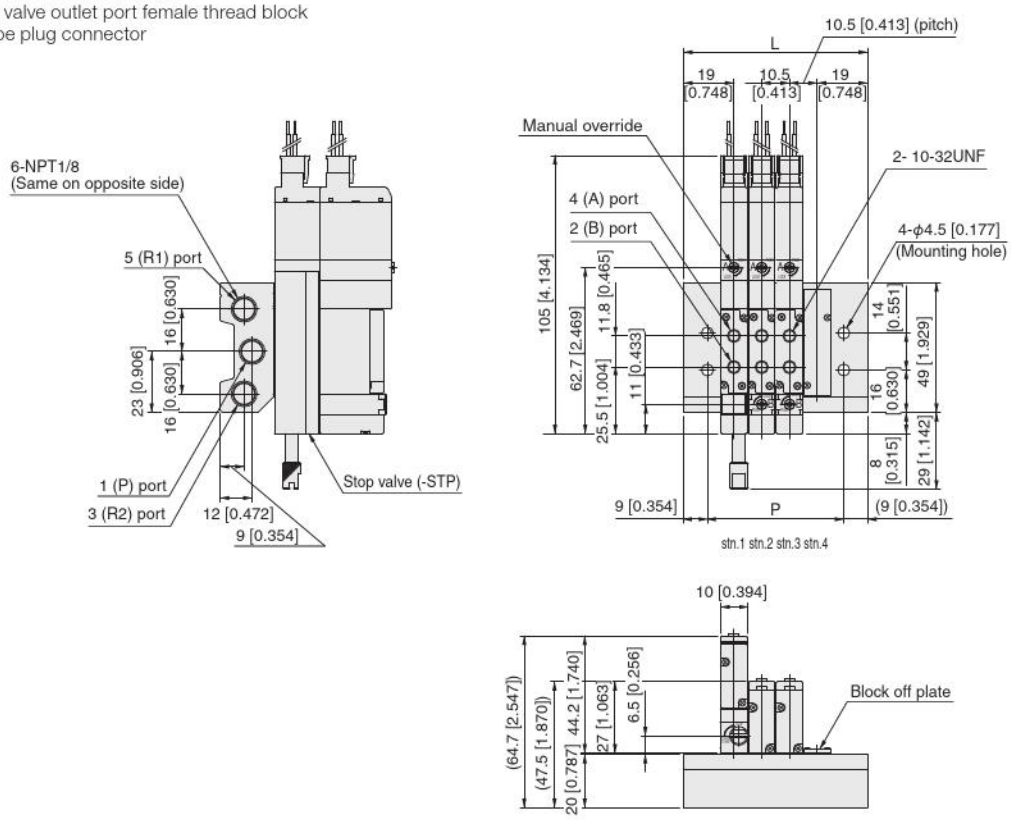

Note: The overall valve length of the T0 type is 8 mm [0.315 in] shorter (end cover side protrusion is 8 mm [0.315 in] less).

Unit dimensions

Number of units	L	P
2	48.5 [1.909]	30.5 [1.201]
3	59.0 [2.323]	41.0 [1.614]
4	69.5 [2.736]	51.5 [2.028]
5	80.0 [3.150]	62.0 [2.441]
6	90.5 [3.563]	72.5 [2.854]
7	101.0 [3.976]	83.0 [3.268]
8	111.5 [4.390]	93.5 [3.681]
9	122.0 [4.803]	104.0 [4.094]
10	132.5 [5.217]	114.5 [4.508]
11	143.0 [5.630]	125.0 [4.921]
12	153.5 [6.043]	135.5 [5.335]
13	164.0 [6.457]	146.0 [5.748]
14	174.5 [6.870]	156.5 [6.161]
15	185.0 [7.283]	167.0 [6.575]
16	195.5 [7.697]	177.5 [6.988]
17	206.0 [8.110]	188.0 [7.402]
18	216.5 [8.524]	198.5 [7.815]
19	227.0 [8.937]	209.0 [8.228]
20	237.5 [9.350]	219.5 [8.642]

F10M [Number of valves] A J/M/L [Pilot specifications] (Base piping type)

Monoblock manifold A type, wire saving type
With manifold outlet port dual use fitting block
These dimensions show flat cable connector 20-pin specifications

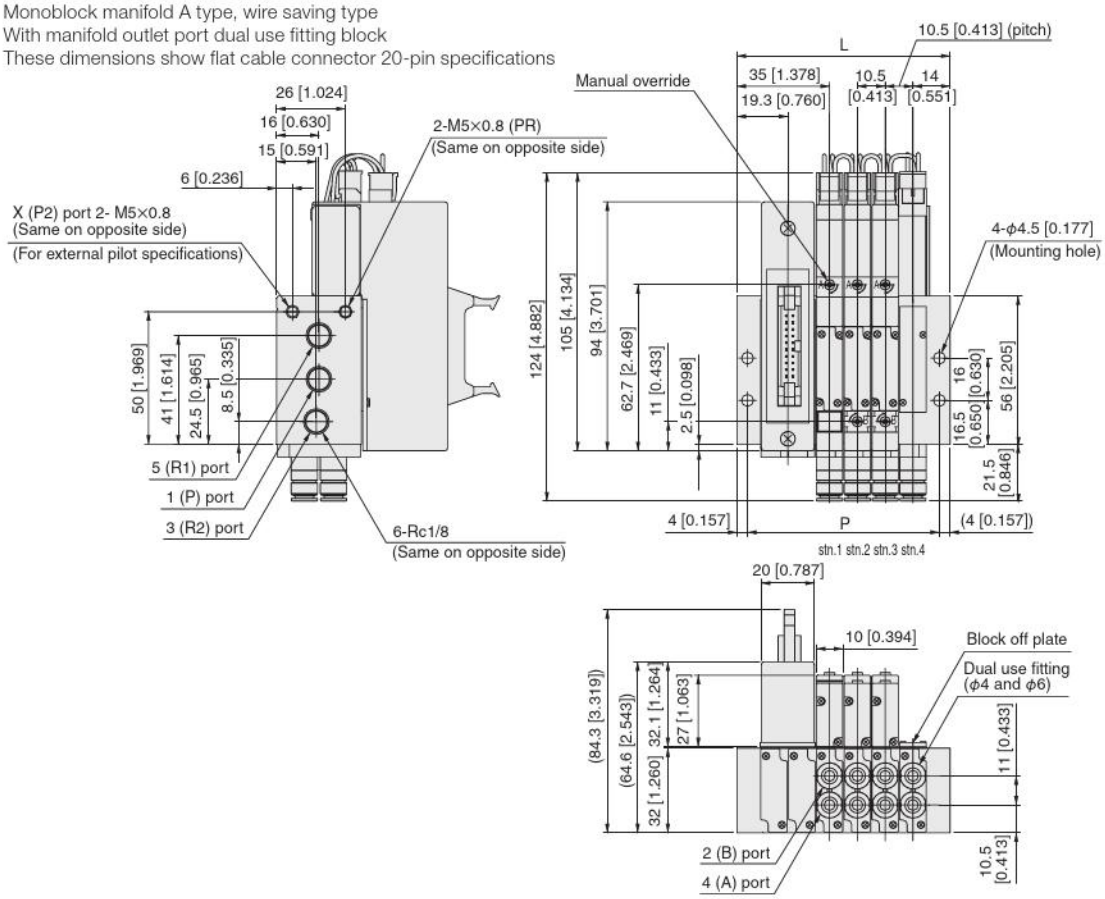

Unit dimensions

Number of units	L	P
2	59.5 [2.343]	51.5 [2.028]
3	70.0 [2.756]	62.0 [2.441]
4	80.5 [3.169]	72.5 [2.854]
5	91.0 [3.583]	83.0 [3.268]
6	101.5 [3.996]	93.5 [3.681]
7	112.0 [4.409]	104.0 [4.094]
8	122.5 [4.823]	114.5 [4.508]
9	133.0 [5.236]	125.0 [4.921]
10	143.5 [5.650]	135.5 [5.335]
11	154.0 [6.063]	146.0 [5.748]
12	164.5 [6.476]	156.5 [6.161]
13	175.0 [6.890]	167.0 [6.575]
14	185.5 [7.303]	177.5 [6.988]
15	196.0 [7.717]	188.0 [7.402]
16	206.5 [8.130]	198.5 [7.815]
17	217.0 [8.543]	209.0 [8.228]
18	227.5 [8.957]	219.5 [8.642]
19	238.0 [9.370]	230.0 [9.055]
20	248.5 [9.783]	240.5 [9.469]

F10M [Number of valves] F (Direct piping type)
F10M [Number of valves] FH (Direct piping type)

Monoblock manifold F type, wire saving type
With manifold outlet port dual use fitting block
These dimensions show flat cable connector 20-pin specifications

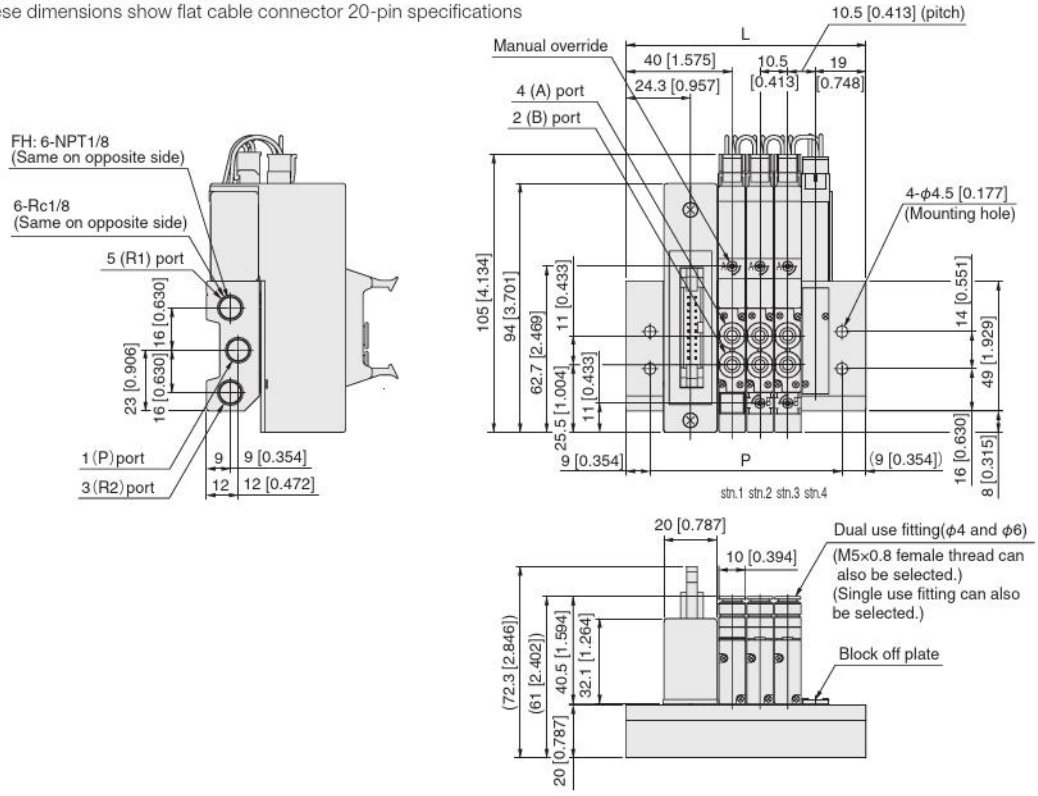

Unit dimensions

Number of units	L	P
2	69.5 [2.736]	51.5 [2.028]
3	80.0 [3.150]	62.0 [2.441]
4	90.5 [3.563]	72.5 [2.854]
5	101.0 [3.976]	83.0 [3.268]
6	111.5 [4.390]	93.5 [3.681]
7	122.0 [4.803]	104.0 [4.094]
8	132.5 [5.217]	114.5 [4.508]
9	143.0 [5.630]	125.0 [4.921]
10	153.5 [6.043]	135.5 [5.335]
11	164.0 [6.457]	146.0 [5.748]
12	174.5 [6.870]	156.5 [6.161]
13	185.0 [7.283]	167.0 [6.575]
14	195.5 [7.697]	177.5 [6.988]
15	206.0 [8.110]	188.0 [7.402]
16	216.5 [8.524]	198.5 [7.815]
17	227.0 [8.937]	209.0 [8.228]
18	237.5 [9.350]	219.5 [8.642]
19	248.0 [9.764]	230.0 [9.055]
20	258.5 [10.177]	240.5 [9.469]

F10M Number of valves F (Direct piping type)

Monoblock manifold F type, wire saving type
With valve outlet port dual use fitting block
These dimensions show flat cable connector 20-pin specifications

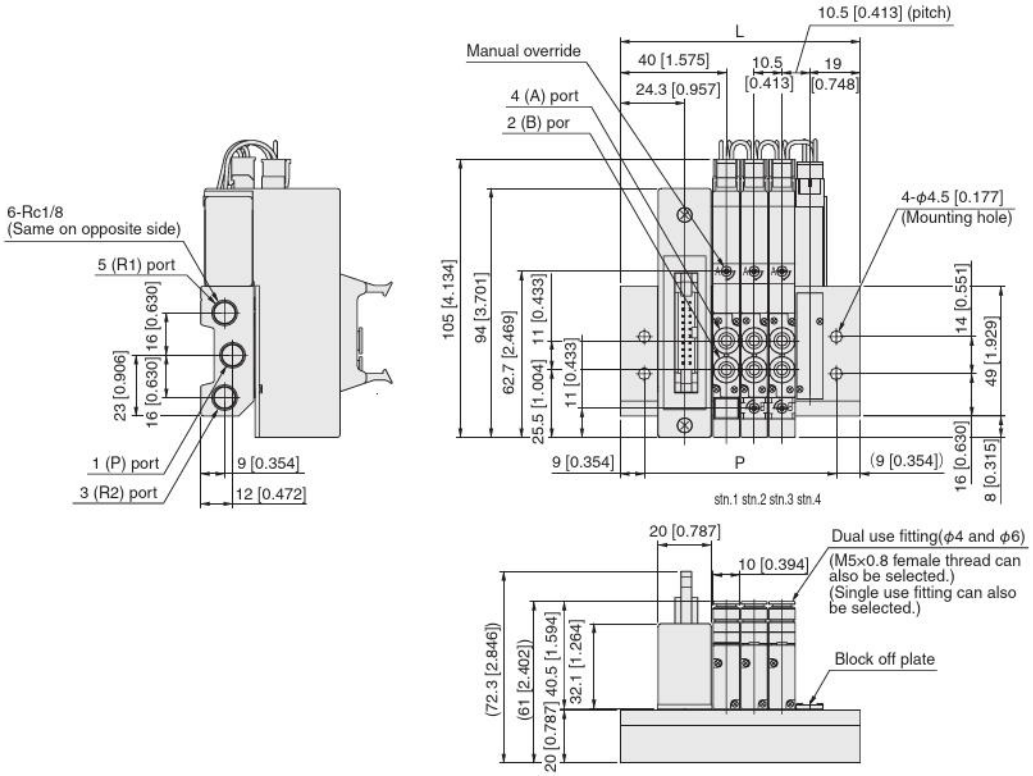

Unit dimensions

Number of units	L	P
2	69.5 [2.736]	51.5 [2.028]
3	80.0 [3.150]	62.0 [2.441]
4	90.5 [3.563]	72.5 [2.854]
5	101.0 [3.976]	83.0 [3.268]
6	111.5 [4.390]	93.5 [3.681]
7	122.0 [4.803]	104.0 [4.094]
8	132.5 [5.217]	114.5 [4.508]
9	143.0 [5.630]	125.0 [4.921]
10	153.5 [6.043]	135.5 [5.335]
11	164.0 [6.457]	146.0 [5.748]
12	174.5 [6.870]	156.5 [6.161]
13	185.0 [7.283]	167.0 [6.575]
14	195.5 [7.697]	177.5 [6.988]
15	206.0 [8.110]	188.0 [7.402]
16	216.5 [8.524]	198.5 [7.815]
17	227.0 [8.937]	209.0 [8.228]
18	237.5 [9.350]	219.5 [8.642]
19	248.0 [9.764]	230.0 [9.055]
20	258.5 [10.177]	240.5 [9.469]

F10M Number of valves FH (Direct piping type)

Monoblock manifold F type, wire saving type
With valve outlet port female thread block
These dimensions show flat cable connector 20-pin specifications

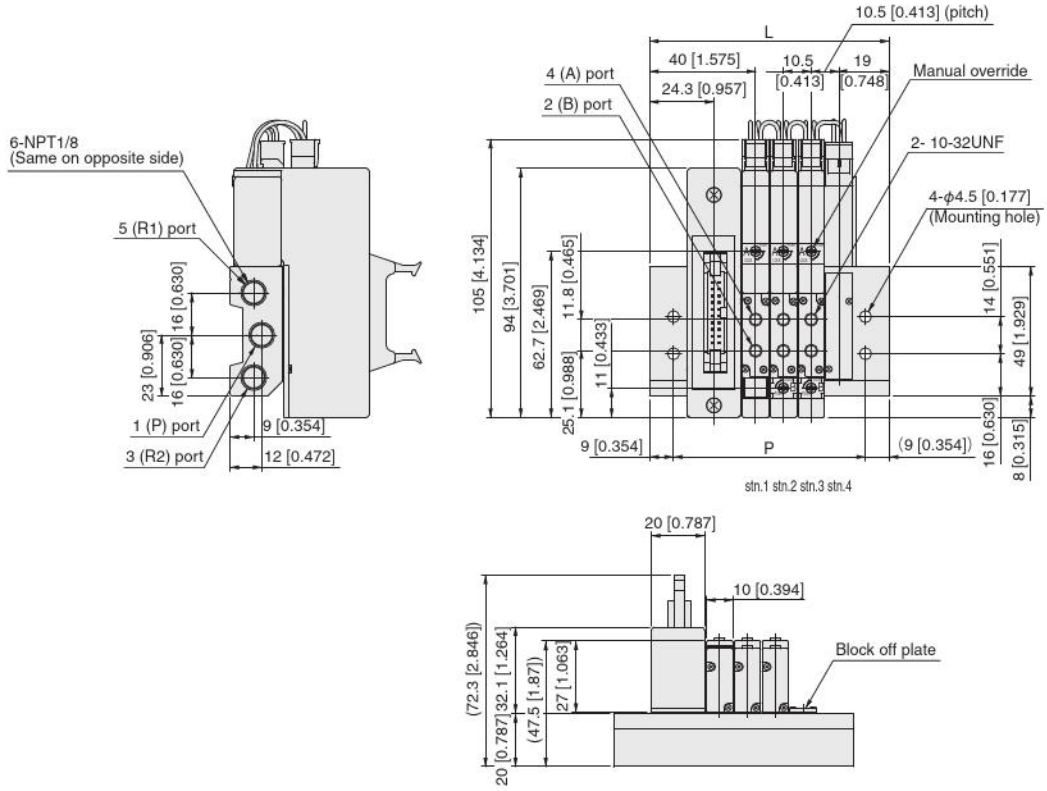

Unit dimensions

Number of units	L	P
2	69.5 [2.736]	51.5 [2.028]
3	80.0 [3.150]	62.0 [2.441]
4	90.5 [3.563]	72.5 [2.854]
5	101.0 [3.976]	83.0 [3.268]
6	111.5 [4.390]	93.5 [3.681]
7	122.0 [4.803]	104.0 [4.094]
8	132.5 [5.217]	114.5 [4.508]
9	143.0 [5.630]	125.0 [4.921]
10	153.5 [6.043]	135.5 [5.335]
11	164.0 [6.457]	146.0 [5.748]
12	174.5 [6.870]	156.5 [6.161]
13	185.0 [7.283]	167.0 [6.575]
14	195.5 [7.697]	177.5 [6.988]
15	206.0 [8.110]	188.0 [7.402]
16	216.5 [8.524]	198.5 [7.815]
17	227.0 [8.937]	209.0 [8.228]
18	237.5 [9.350]	219.5 [8.642]
19	248.0 [9.764]	230.0 [9.055]
20	258.5 [10.177]	240.5 [9.469]

F10M [Number of valves] AP J/M/L [Pilot specifications] (Base piping type)

PC board manifold A type
With manifold outlet port dual use fitting block

Note: Mounted valve example shows -W wiring specifications.
In the case of -S wiring specifications, the mounted valve becomes T0 or T1 type.

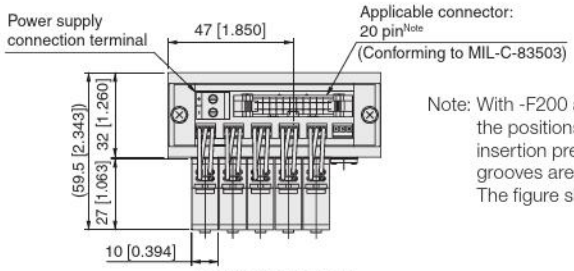

Note: With -F200 and -F201, the positions of the mis-insertion prevention grooves are reversed.
The figure shows -F200.

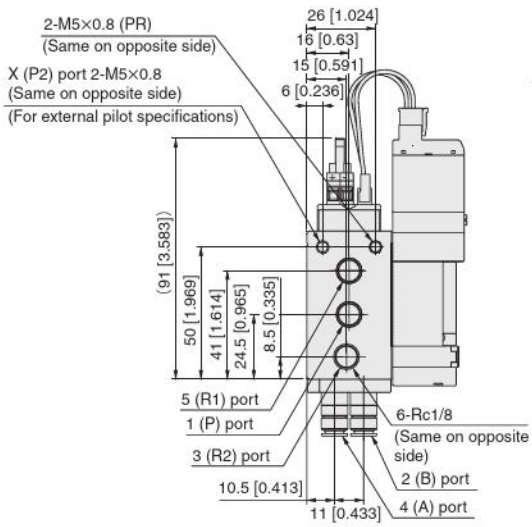

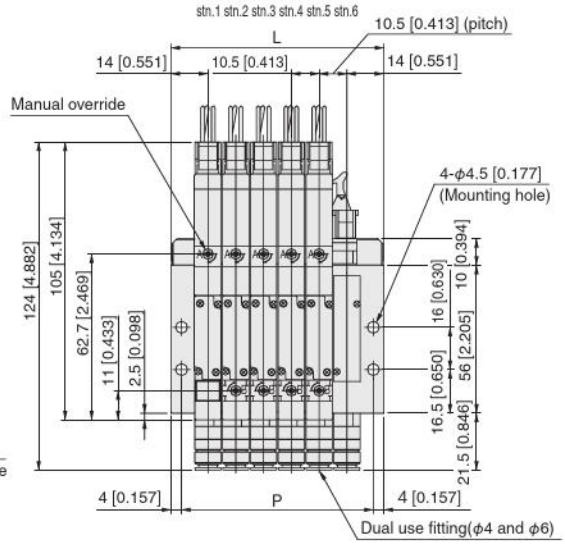

Unit dimensions

Number of units	L	P
6	80.5 [3.169]	72.5 [2.854]
8	101.5 [3.996]	93.5 [3.681]
10	122.5 [4.823]	114.5 [4.508]
12	143.5 [5.650]	135.5 [5.335]
14	164.5 [6.476]	156.5 [6.161]
16	185.5 [7.303]	177.5 [6.988]

Note: Wiring specifications
For -S
6, 8, 10, 12, 14, 16 units

For -W
Only 6 and 8 units selectable

F10M [Number of valves] FP (Direct piping type)

PC board manifold F type
With valve outlet port dual use fitting block

Note: Mounted valve example shows -W wiring specifications.
In the case of -S wiring specifications, the mounted valve becomes T0 or T1 type.

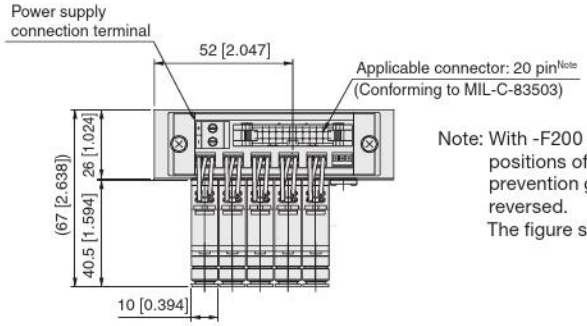

Note: With -F200 and -F201, the positions of the misinsertion prevention grooves are reversed.
The figure shows -F200.

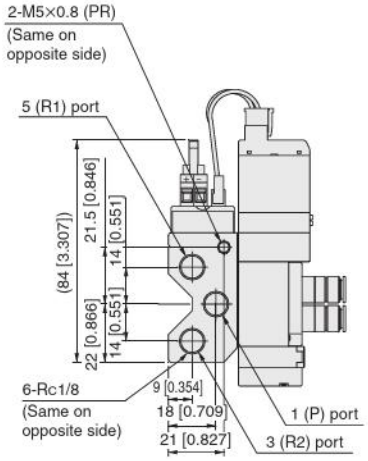

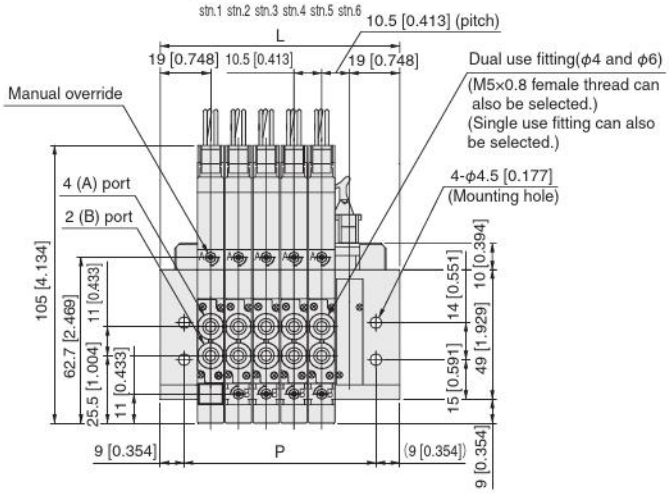

Unit dimensions

Number of units	L	P
6	90.5 [3.563]	72.5 [2.854]
8	111.5 [4.390]	93.5 [3.681]
10	132.5 [5.217]	114.5 [4.508]
12	153.5 [6.043]	135.5 [5.335]
14	174.5 [6.870]	156.5 [6.161]
16	195.5 [7.697]	177.5 [6.988]

Note: Wiring specifications
For -S
6, 8, 10, 12, 14, 16 units

For -W
Only 6 and 8 units selectable

Note: The overall valve length of the T0 type is 8 mm [0.315 in] shorter (end cover side protrusion is 8 mm [0.315 in] less).

F10M [Number of valves] N J/M/L [Pilot specifications] (Base piping type)

With manifold outlet port dual use fitting block
S type plug connector

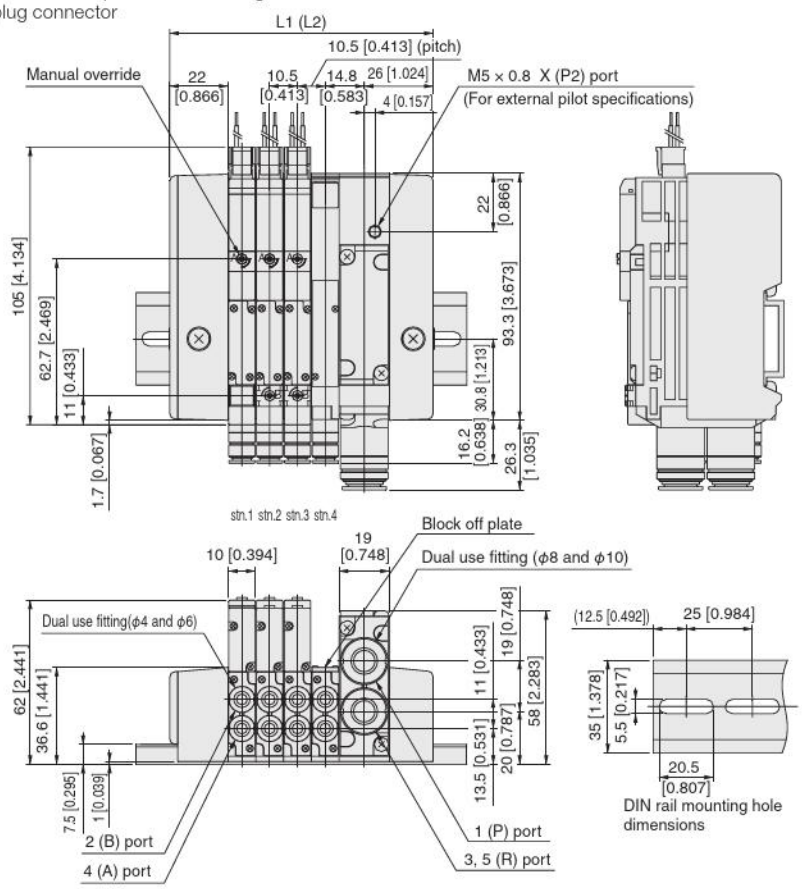

Unit dimensions

Number of units	L1	Length of DIN rail	L2 Note	Length of DIN rail Note
2	78.5 [3.091]	125 [4.921]	97.5 [3.839]	125 [4.921]
3	89.0 [3.504]	125 [4.921]	108.0 [4.252]	150 [5.906]
4	99.5 [3.917]	125 [4.921]	118.5 [4.665]	150 [5.906]
5	110.0 [4.331]	150 [5.906]	129.0 [5.079]	175 [6.890]
6	120.5 [4.744]	150 [5.906]	139.5 [5.492]	175 [6.890]
7	131.0 [5.157]	175 [6.890]	150.0 [5.906]	175 [6.890]
8	141.5 [5.571]	175 [6.890]	160.5 [6.319]	200 [7.874]
9	152.0 [5.984]	200 [7.874]	171.0 [6.732]	200 [7.874]
10	162.5 [6.398]	200 [7.874]	181.5 [7.146]	225 [8.858]
11	173.0 [6.811]	200 [7.874]	192.0 [7.559]	225 [8.858]
12	183.5 [7.224]	225 [8.858]	202.5 [7.972]	250 [9.843]
13	194.0 [7.638]	225 [8.858]	213.0 [8.386]	250 [9.843]
14	204.5 [8.051]	250 [9.843]	223.5 [8.799]	250 [9.843]
15	215.0 [8.465]	250 [9.843]	234.0 [9.213]	275 [10.827]
16	225.5 [8.878]	275 [10.827]	244.5 [9.626]	275 [10.827]
17	236.0 [9.291]	275 [10.827]	255.0 [10.039]	300 [11.811]
18	246.5 [9.705]	275 [10.827]	265.5 [10.453]	300 [11.811]
19	257.0 [10.118]	300 [11.811]	276.0 [10.866]	325 [12.795]
20	267.5 [10.531]	300 [11.811]	286.5 [11.280]	325 [12.795]

Note: When two piping blocks are used.

F10M [Number of valves] N [Pilot specifications] (Direct piping type)

With valve outlet port dual use fitting block
S type plug connector

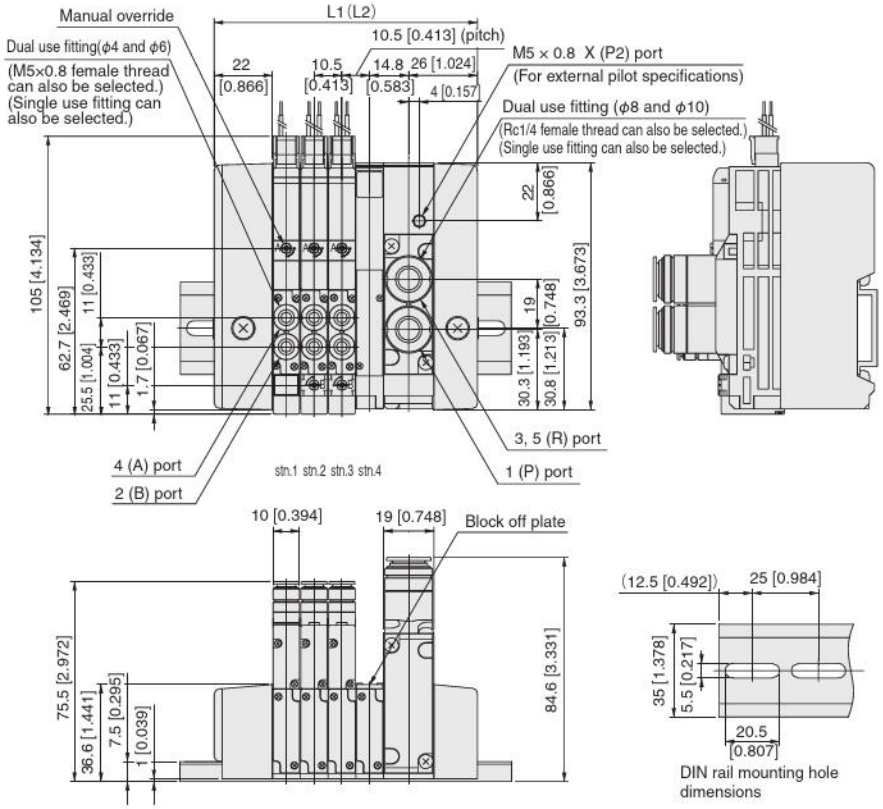

Unit dimensions

Number of units	L1	Length of DIN rail	L2 Note	Length of DIN rail Note
2	78.5 [3.091]	125 [4.921]	97.5 [3.839]	125 [4.921]
3	89.0 [3.504]	125 [4.921]	108.0 [4.252]	150 [5.906]
4	99.5 [3.917]	125 [4.921]	118.5 [4.665]	150 [5.906]
5	110.0 [4.331]	150 [5.906]	129.0 [5.079]	175 [6.890]
6	120.5 [4.744]	150 [5.906]	139.5 [5.492]	175 [6.890]
7	131.0 [5.157]	175 [6.890]	150.0 [5.906]	175 [6.890]
8	141.5 [5.571]	175 [6.890]	160.5 [6.319]	200 [7.874]
9	152.0 [5.984]	200 [7.874]	171.0 [6.732]	200 [7.874]
10	162.5 [6.398]	200 [7.874]	181.5 [7.146]	225 [8.858]
11	173.0 [6.811]	200 [7.874]	192.0 [7.559]	225 [8.858]
12	183.5 [7.224]	225 [8.858]	202.5 [7.972]	250 [9.843]
13	194.0 [7.638]	225 [8.858]	213.0 [8.386]	250 [9.843]
14	204.5 [8.051]	250 [9.843]	223.5 [8.799]	250 [9.843]
15	215.0 [8.465]	250 [9.843]	234.0 [9.213]	275 [10.827]
16	225.5 [8.878]	275 [10.827]	244.5 [9.626]	275 [10.827]
17	236.0 [9.291]	275 [10.827]	255.0 [10.039]	300 [11.811]
18	246.5 [9.705]	275 [10.827]	265.5 [10.453]	300 [11.811]
19	257.0 [10.118]	300 [11.811]	276.0 [10.866]	325 [12.795]
20	267.5 [10.531]	300 [11.811]	286.5 [11.280]	325 [12.795]

Note: When two piping blocks are used.

Note: The overall valve length of the T0 type is 8 mm [0.315 in] shorter (end cover side protrusion is 8 mm [0.315 in] less).

F10M Number of valves NHL Pilot specifications (Base piping type)

With manifold outlet port female thread block
S type plug connector

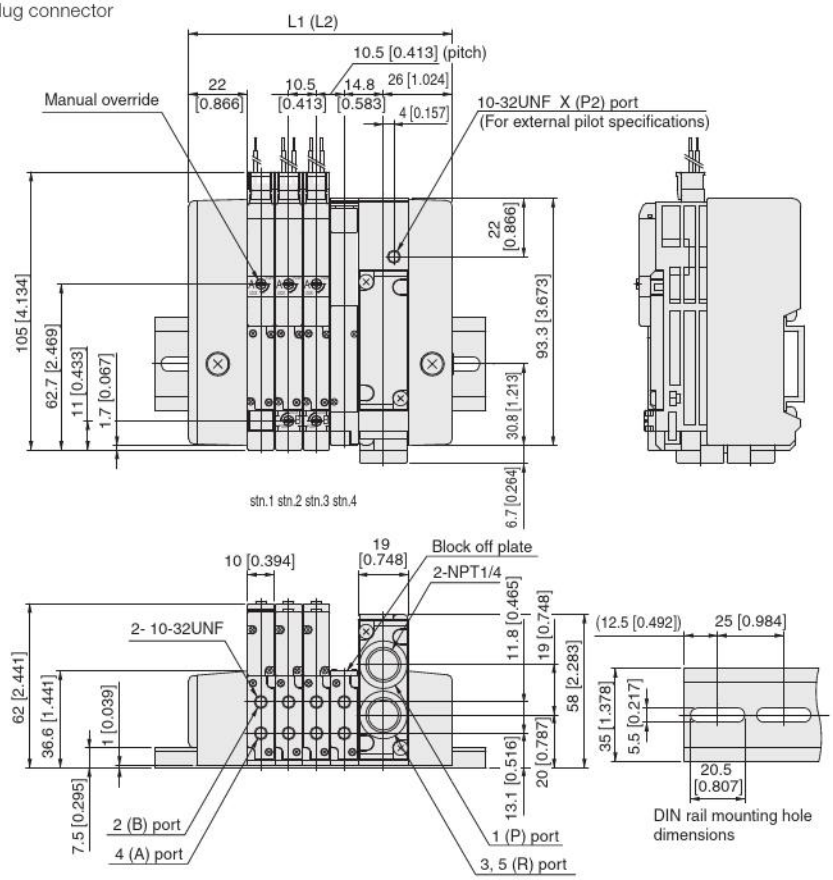

Unit dimensions

Number of units	L1	Length of DIN rail	L2 Note	Length of DIN rail Note
2	78.5 [3.091]	125 [4.921]	97.5 [3.839]	125 [4.921]
3	89.0 [3.504]	125 [4.921]	108.0 [4.252]	150 [5.906]
4	99.5 [3.917]	125 [4.921]	118.5 [4.665]	150 [5.906]
5	110.0 [4.331]	150 [5.906]	129.0 [5.079]	175 [6.890]
6	120.5 [4.744]	150 [5.906]	139.5 [5.492]	175 [6.890]
7	131.0 [5.157]	175 [6.890]	150.0 [5.906]	175 [6.890]
8	141.5 [5.571]	175 [6.890]	160.5 [6.319]	200 [7.874]
9	152.0 [5.984]	200 [7.874]	171.0 [6.732]	200 [7.874]
10	162.5 [6.398]	200 [7.874]	181.5 [7.146]	225 [8.858]
11	173.0 [6.811]	200 [7.874]	192.0 [7.559]	225 [8.858]
12	183.5 [7.224]	225 [8.858]	202.5 [7.972]	250 [9.843]
13	194.0 [7.638]	225 [8.858]	213.0 [8.386]	250 [9.843]
14	204.5 [8.051]	250 [9.843]	223.5 [8.799]	250 [9.843]
15	215.0 [8.465]	250 [9.843]	234.0 [9.213]	275 [10.827]
16	225.5 [8.878]	275 [10.827]	244.5 [9.626]	275 [10.827]
17	236.0 [9.291]	275 [10.827]	255.0 [10.039]	300 [11.811]
18	246.5 [9.705]	275 [10.827]	265.5 [10.453]	300 [11.811]
19	257.0 [10.118]	300 [11.811]	276.0 [10.866]	325 [12.795]
20	267.5 [10.531]	300 [11.811]	286.5 [11.280]	325 [12.795]

Note: When two piping blocks are used.

F10M Number of valves NH Pilot specifications (Direct piping type)

With valve outlet port female thread block
S type plug connector

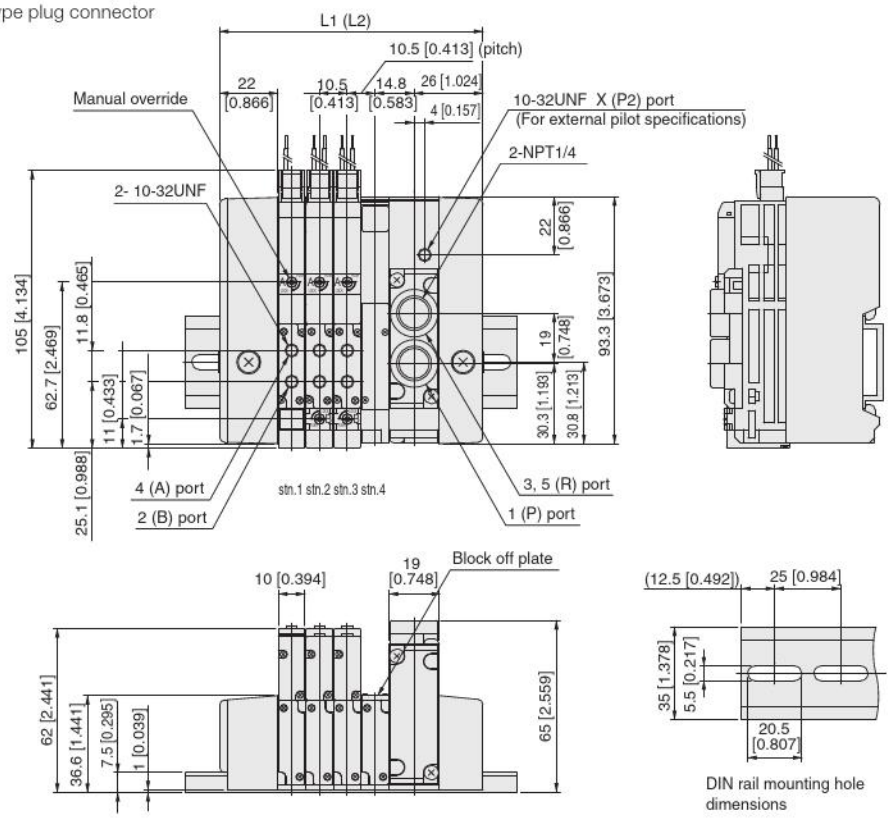

Unit dimensions

Number of units	L1	Length of DIN rail	L2 Note	Length of DIN rail Note
2	78.5 [3.091]	125 [4.921]	97.5 [3.839]	125 [4.921]
3	89.0 [3.504]	125 [4.921]	108.0 [4.252]	150 [5.906]
4	99.5 [3.917]	125 [4.921]	118.5 [4.665]	150 [5.906]
5	110.0 [4.331]	150 [5.906]	129.0 [5.079]	175 [6.890]
6	120.5 [4.744]	150 [5.906]	139.5 [5.492]	175 [6.890]
7	131.0 [5.157]	175 [6.890]	150.0 [5.906]	175 [6.890]
8	141.5 [5.571]	175 [6.890]	160.5 [6.319]	200 [7.874]
9	152.0 [5.984]	200 [7.874]	171.0 [6.732]	200 [7.874]
10	162.5 [6.398]	200 [7.874]	181.5 [7.146]	225 [8.858]
11	173.0 [6.811]	200 [7.874]	192.0 [7.559]	225 [8.858]
12	183.5 [7.224]	225 [8.858]	202.5 [7.972]	250 [9.843]
13	194.0 [7.638]	225 [8.858]	213.0 [8.386]	250 [9.843]
14	204.5 [8.051]	250 [9.843]	223.5 [8.799]	250 [9.843]
15	215.0 [8.465]	250 [9.843]	234.0 [9.213]	275 [10.827]
16	225.5 [8.878]	275 [10.827]	244.5 [9.626]	275 [10.827]
17	236.0 [9.291]	275 [10.827]	255.0 [10.039]	300 [11.811]
18	246.5 [9.705]	275 [10.827]	265.5 [10.453]	300 [11.811]
19	257.0 [10.118]	300 [11.811]	276.0 [10.866]	325 [12.795]
20	267.5 [10.531]	300 [11.811]	286.5 [11.280]	325 [12.795]

Note: When two piping blocks are used.

Note: The overall valve length of the T0 type is 8 mm [0.315 in] shorter (end cover side protrusion is 8 mm [0.315 in] less).

F10M [Number of valves] P J/M/L [Pilot specifications] (Base piping type)

With manifold outlet port dual use fitting block
Flat cable connector 10-pin specifications

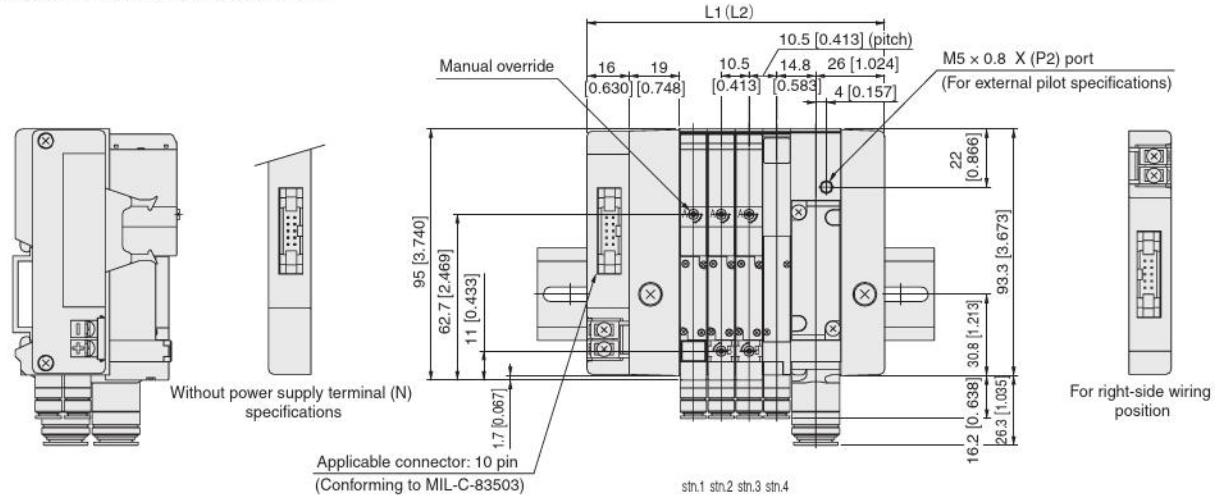

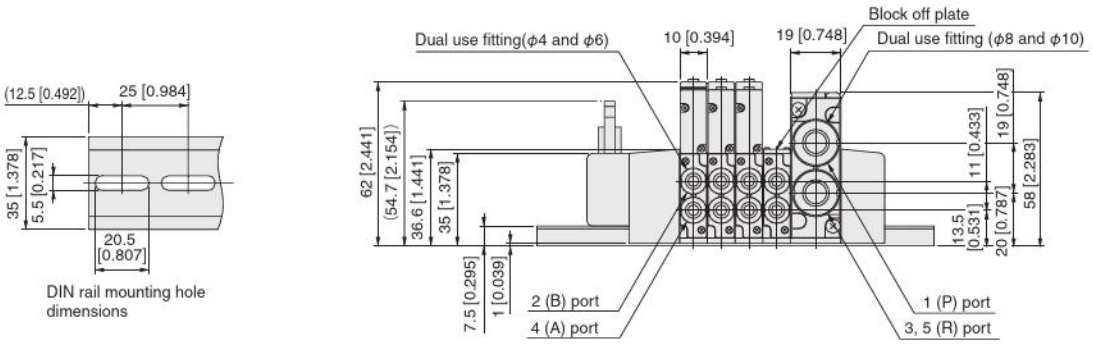

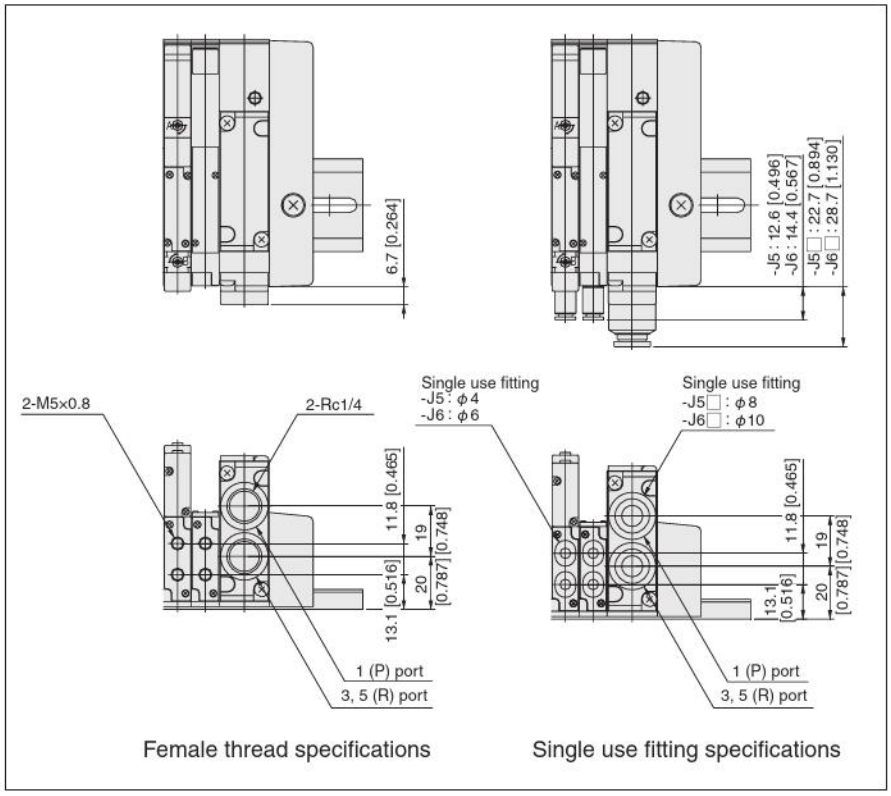

Unit dimensions

Number of units	L1	Length of DIN rail	L2 Note	Length of DIN rail Note
2	91.5 [3.602]	125 [4.921]	110.5 [4.350]	150 [5.906]
3	102.0 [4.016]	150 [5.906]	121.0 [4.764]	175 [6.890]
4	112.5 [4.429]	150 [5.906]	131.5 [5.177]	175 [6.890]
5	123.0 [4.843]	175 [6.890]	142.0 [5.591]	175 [6.890]
6	133.5 [5.256]	175 [6.890]	152.5 [6.004]	200 [7.874]
7	144.0 [5.669]	200 [7.874]	163.0 [6.417]	200 [7.874]
8	154.5 [6.083]	200 [7.874]	173.5 [6.831]	225 [8.858]

Note: When two piping blocks are used.
* For right-side mounting wiring (-R), add 5.5 mm [0.217 in] to the L1 (L2) dimension.

F10M [Number of valves] P [J/M/L] [Pilot specifications] (Base piping type)

With manifold outlet port dual use fitting block
Flat cable connector 20-pin specifications (side surface wiring)

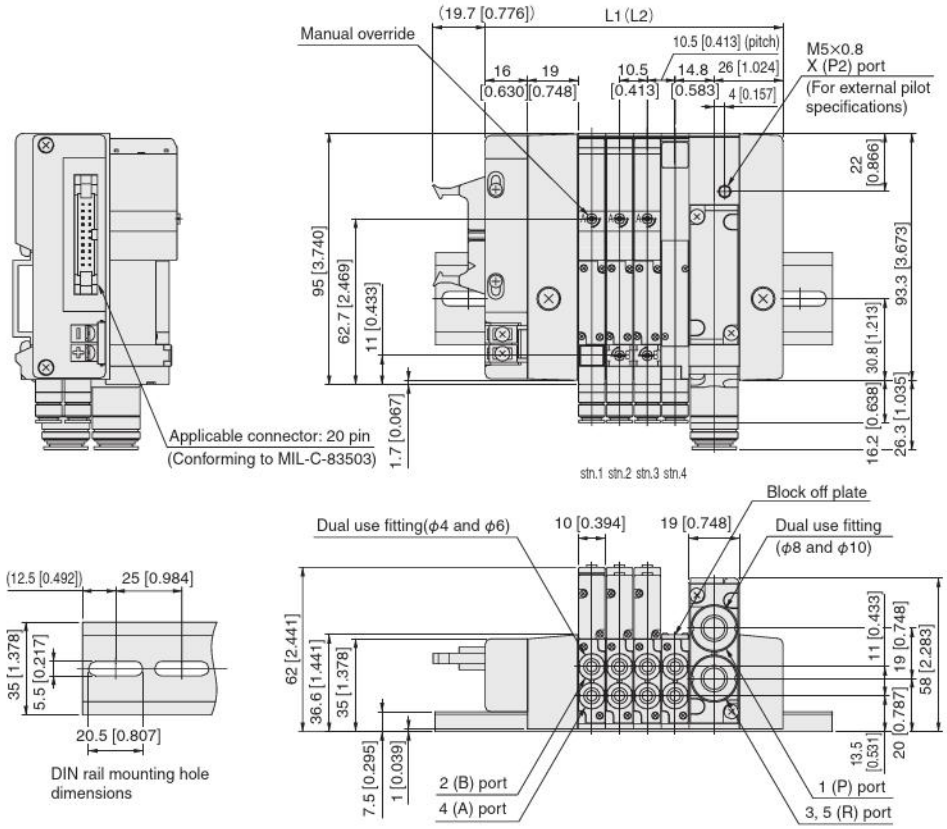

Unit dimensions

Number of units	L1	Length of DIN rail	L2 Note	Length of DIN rail Note
2	91.5 [3.602]	125 [4.921]	110.5 [4.350]	150 [5.906]
3	102.0 [4.016]	150 [5.906]	121.0 [4.764]	175 [6.890]
4	112.5 [4.429]	150 [5.906]	131.5 [5.177]	175 [6.890]
5	123.0 [4.843]	175 [6.890]	142.0 [5.591]	175 [6.890]
6	133.5 [5.256]	175 [6.890]	152.5 [6.004]	200 [7.874]
7	144.0 [5.669]	200 [7.874]	163.0 [6.417]	200 [7.874]
8	154.5 [6.083]	200 [7.874]	173.5 [6.831]	225 [8.858]
9	165.0 [6.496]	200 [7.874]	184.0 [7.244]	225 [8.858]
10	175.5 [6.909]	225 [8.858]	194.5 [7.657]	250 [9.843]
11	186.0 [7.323]	225 [8.858]	205.0 [8.071]	250 [9.843]
12	196.5 [7.736]	250 [9.843]	215.5 [8.484]	250 [9.843]
13	207.0 [8.150]	250 [9.843]	226.0 [8.898]	275 [10.827]
14	217.5 [8.563]	275 [10.827]	236.5 [9.311]	275 [10.827]
15	228.0 [8.976]	275 [10.827]	247.0 [9.724]	300 [11.811]
16	238.5 [9.390]	275 [10.827]	257.5 [10.138]	300 [11.811]

Note: When two piping blocks are used.
* For right-side mounting wiring (-R), add 5.5 mm [0.217 in] to the L1 (L2) dimension.

F10M [Number of valves] P [J/M/L] [Pilot specifications] (Base piping type)

With manifold outlet port dual use fitting block
Flat cable connector 26-pin specifications

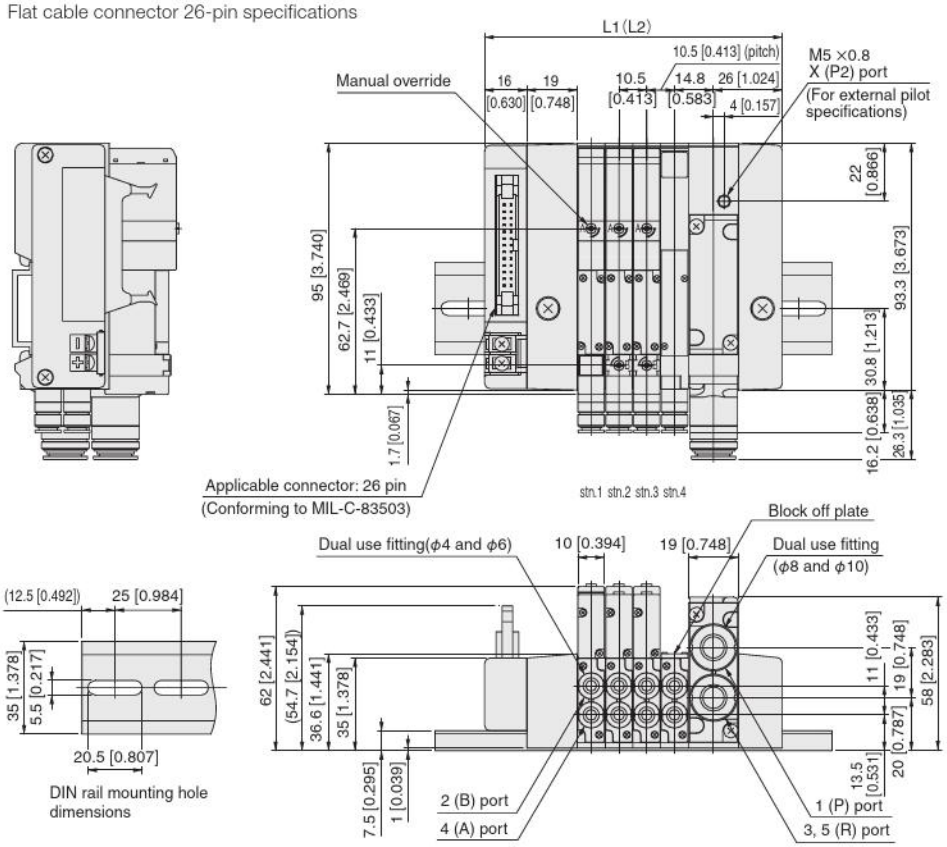

Unit dimensions

Number of units	L1	Length of DIN rail	L2 Note	Length of DIN rail Note
2	91.5 [3.602]	125 [4.921]	110.5 [4.350]	150 [5.906]
3	102.0 [4.016]	150 [5.906]	121.0 [4.764]	175 [6.890]
4	112.5 [4.429]	150 [5.906]	131.5 [5.177]	175 [6.890]
5	123.0 [4.843]	175 [6.890]	142.0 [5.591]	175 [6.890]
6	133.5 [5.256]	175 [6.890]	152.5 [6.004]	200 [7.874]
7	144.0 [5.669]	200 [7.874]	163.0 [6.417]	200 [7.874]
8	154.5 [6.083]	200 [7.874]	173.5 [6.831]	225 [8.858]
9	165.0 [6.496]	200 [7.874]	184.0 [7.244]	225 [8.858]
10	175.5 [6.909]	225 [8.858]	194.5 [7.657]	250 [9.843]
11	186.0 [7.323]	225 [8.858]	205.0 [8.071]	250 [9.843]
12	196.5 [7.736]	250 [9.843]	215.5 [8.484]	250 [9.843]
13	207.0 [8.150]	250 [9.843]	226.0 [8.898]	275 [10.827]
14	217.5 [8.563]	275 [10.827]	236.5 [9.311]	275 [10.827]
15	228.0 [8.976]	275 [10.827]	247.0 [9.724]	300 [11.811]
16	238.5 [9.390]	275 [10.827]	257.5 [10.138]	300 [11.811]
17	249.0 [9.803]	300 [11.811]	268.0 [10.551]	325 [12.795]
18	259.5 [10.217]	300 [11.811]	278.5 [10.965]	325 [12.795]
19	270.0 [10.630]	325 [12.795]	289.0 [11.378]	325 [12.795]
20	280.5 [11.043]	325 [12.795]	299.5 [11.791]	350 [13.780]

Note: When two piping blocks are used.
* For right-side mounting wiring (-R), add 5.5 mm [0.217 in] to the L1 (L2) dimension.

F10M Number of valves P J M L Pilot specifications (Base piping type)

With manifold outlet port dual use fitting block
D-sub connector 25-pin specifications

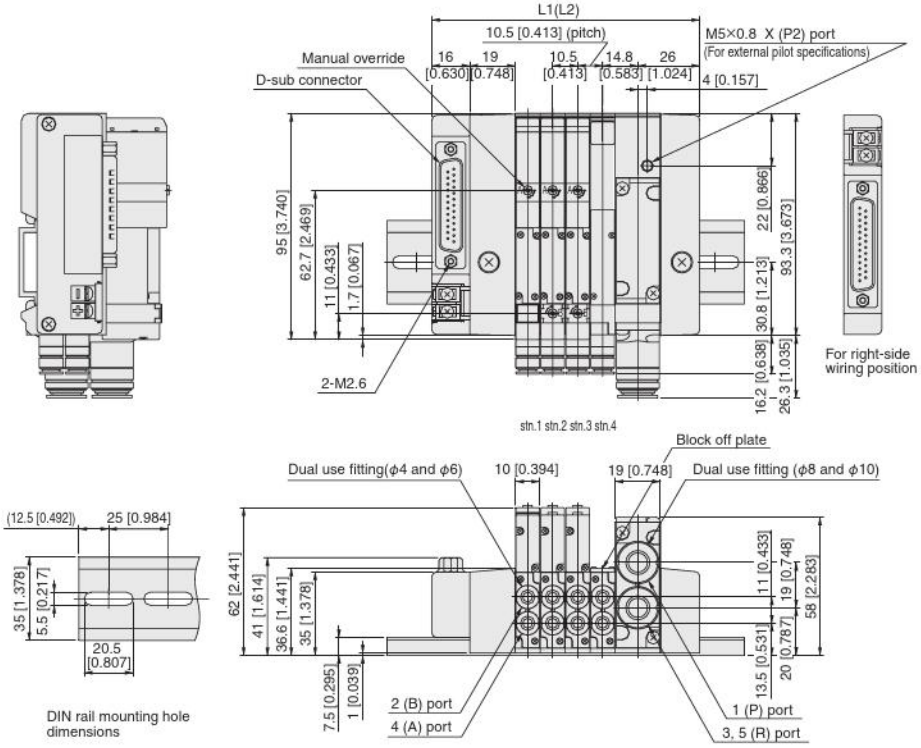

Unit dimensions

Number of units	L1	Length of DIN rail	L2 Note	Length of DIN rail Note
2	91.5 [3.602]	125 [4.921]	110.5 [4.350]	150 [5.906]
3	102.0 [4.016]	150 [5.906]	121.0 [4.764]	175 [6.890]
4	112.5 [4.429]	150 [5.906]	131.5 [5.177]	175 [6.890]
5	123.0 [4.843]	175 [6.890]	142.0 [5.591]	175 [6.890]
6	133.5 [5.256]	175 [6.890]	152.5 [6.004]	200 [7.874]
7	144.0 [5.669]	200 [7.874]	163.0 [6.417]	200 [7.874]
8	154.5 [6.083]	200 [7.874]	173.5 [6.831]	225 [8.858]
9	165.0 [6.496]	200 [7.874]	184.0 [7.244]	225 [8.858]
10	175.5 [6.909]	225 [8.858]	194.5 [7.657]	250 [9.843]
11	186.0 [7.323]	225 [8.858]	205.0 [8.071]	250 [9.843]
12	196.5 [7.736]	250 [9.843]	215.5 [8.484]	250 [9.843]
13	207.0 [8.150]	250 [9.843]	226.0 [8.898]	275 [10.827]
14	217.5 [8.563]	275 [10.827]	236.5 [9.311]	275 [10.827]
15	228.0 [8.976]	275 [10.827]	247.0 [9.724]	300 [11.811]
16	238.5 [9.390]	275 [10.827]	257.5 [10.138]	300 [11.811]
17	249.0 [9.803]	300 [11.811]	268.0 [10.551]	325 [12.795]
18	259.5 [10.217]	300 [11.811]	278.5 [10.965]	325 [12.795]
19	270.0 [10.630]	325 [12.795]	289.0 [11.378]	325 [12.795]
20	280.5 [11.043]	325 [12.795]	299.5 [11.791]	350 [13.780]

Note: When two piping blocks are used.
* For right-side mounting wiring (-R), add 5.5 mm [0.217 in] to the L1 (L2) dimension.

F10M Number of valves P J M L Pilot specifications (Base piping type)

With manifold outlet port dual use fitting block
Terminal block type

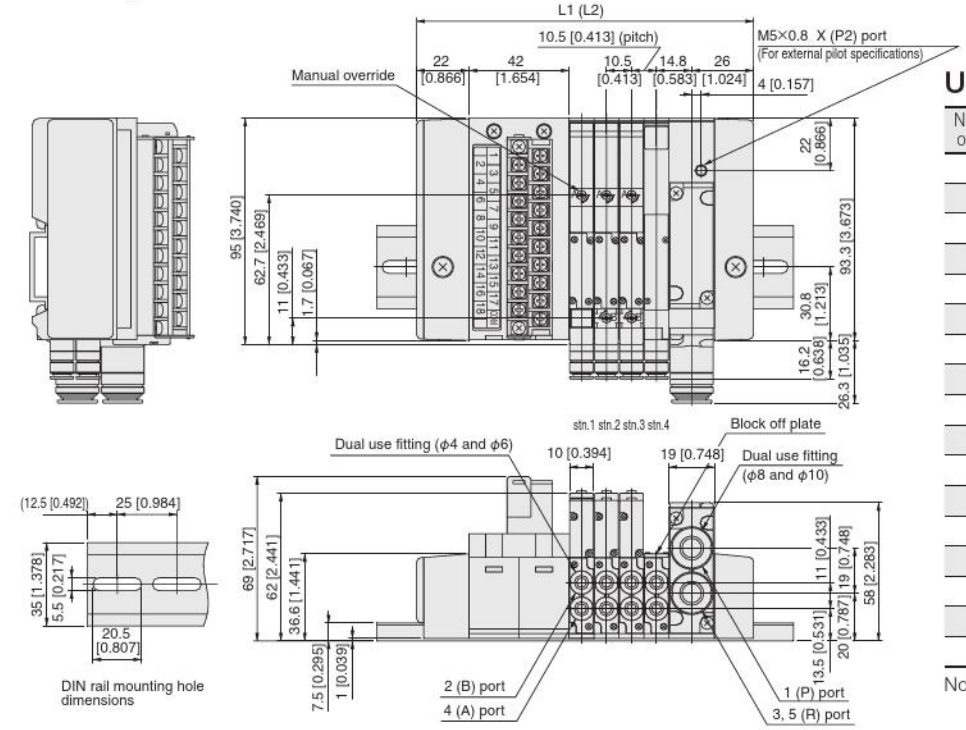

Unit dimensions

Number of units	L1	Length of DIN rail	L2 Note	Length of DIN rail Note
2	120.5 [4.744]	150 [5.906]	139.5 [5.492]	175 [6.890]
3	131.0 [5.157]	175 [6.890]	150.0 [5.906]	175 [6.890]
4	141.5 [5.571]	175 [6.890]	160.5 [6.319]	200 [7.874]
5	152.0 [5.984]	200 [7.874]	171.0 [6.732]	200 [7.874]
6	162.5 [6.398]	200 [7.874]	181.5 [7.146]	225 [8.858]
7	173.0 [6.811]	200 [7.874]	192.0 [7.559]	225 [8.858]
8	183.5 [7.224]	225 [8.858]	202.5 [7.972]	250 [9.843]
9	194.0 [7.638]	225 [8.858]	213.0 [8.386]	250 [9.843]
10	204.5 [8.051]	250 [9.843]	223.5 [8.799]	250 [9.843]
11	215.0 [8.465]	250 [9.843]	234.0 [9.213]	275 [10.827]
12	225.5 [8.878]	275 [10.827]	244.5 [9.626]	275 [10.827]
13	236.0 [9.291]	275 [10.827]	255.0 [10.039]	300 [11.811]
14	246.5 [9.705]	275 [10.827]	265.5 [10.453]	300 [11.811]
15	257.0 [10.118]	300 [11.811]	276.0 [10.866]	325 [12.795]
16	267.5 [10.531]	300 [11.811]	286.5 [11.280]	325 [12.795]
17	278.0 [10.945]	325 [12.795]	297.0 [11.693]	325 [12.795]
18	288.5 [11.358]	325 [12.795]	307.5 [12.106]	350 [13.780]

Note: When two piping blocks are used.

F10M Number of valves PHL Pilot specifications (Base piping type)

With manifold outlet port female thread block
Flat cable connector 10-pin specifications

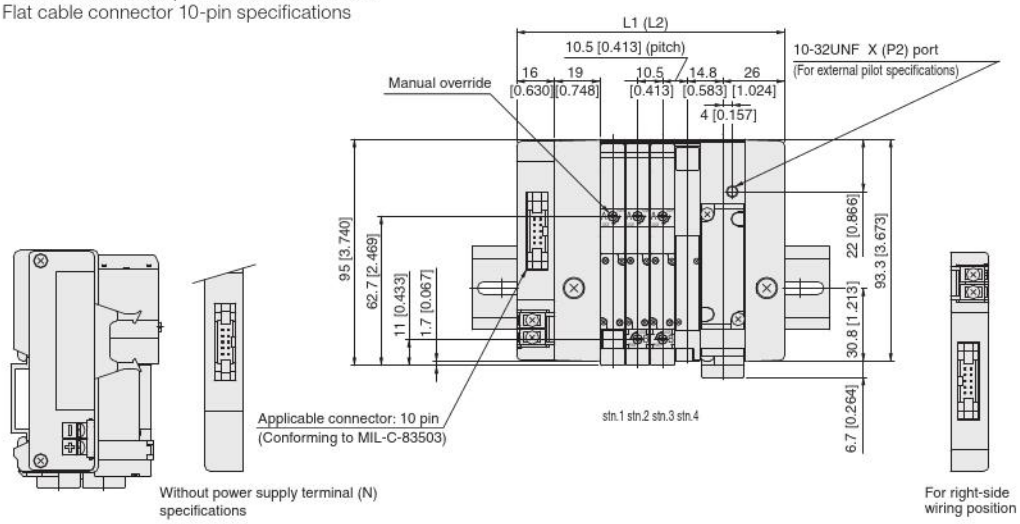

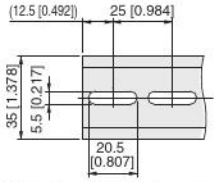

DIN rail mounting hole dimensions

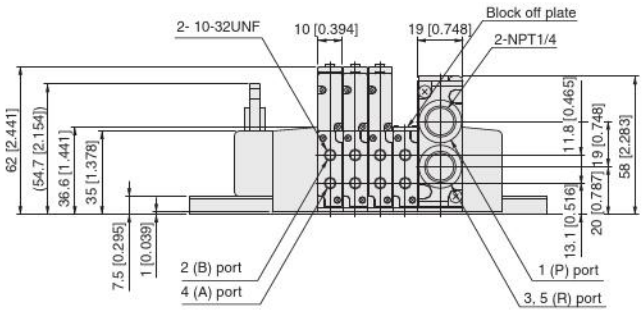

Unit dimensions

Number of units	L1	Length of DIN rail	L2 Note	Length of DIN rail Note
2	91.5 [3.602]	125 [4.921]	110.5 [4.350]	150 [5.906]
3	102.0 [4.016]	150 [5.906]	121.0 [4.764]	175 [6.890]
4	112.5 [4.429]	150 [5.906]	131.5 [5.177]	175 [6.890]
5	123.0 [4.843]	175 [6.890]	142.0 [5.591]	175 [6.890]
6	133.5 [5.256]	175 [6.890]	152.5 [6.004]	200 [7.874]
7	144.0 [5.669]	200 [7.874]	163.0 [6.417]	200 [7.874]
8	154.5 [6.083]	200 [7.874]	173.5 [6.831]	225 [8.858]

Note: When two piping blocks are used.
* For right-side mounting wiring (-R), add 5.5 mm [0.217 in] to the L1 (L2) dimension.

F10M Number of valves Pilot specifications (Direct piping type)

With valve outlet port female thread block
Flat cable connector 10-pin specifications

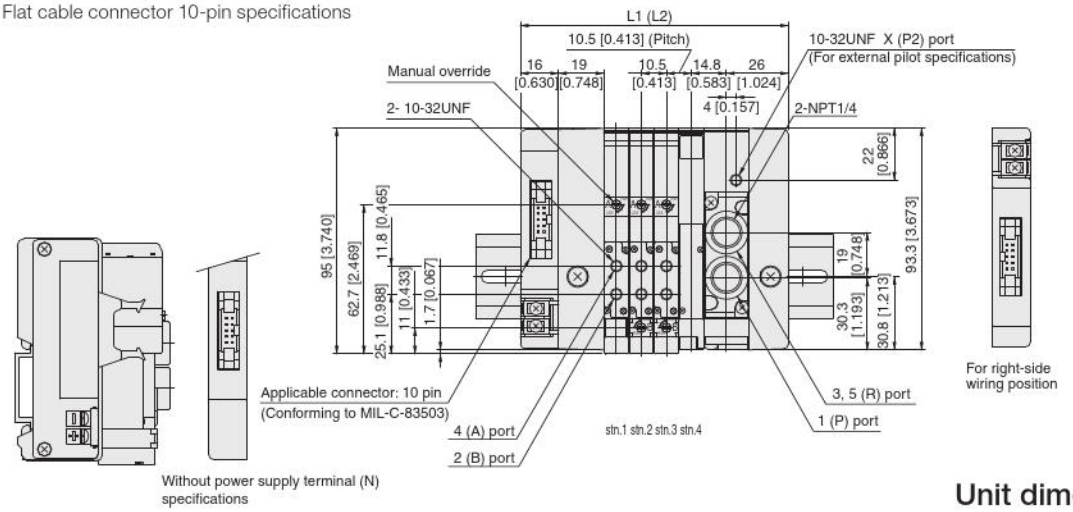

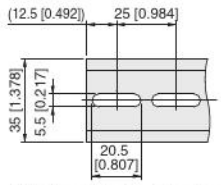

DIN rail mounting hole dimensions

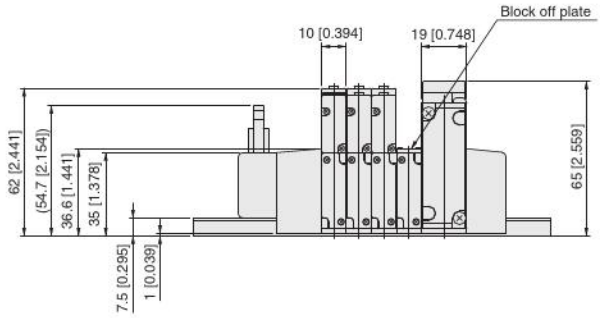

Unit dimensions

Number of units	L1	Length of DIN rail	L2 Note	Length of DIN rail Note
2	91.5 [3.602]	125 [4.921]	110.5 [4.350]	150 [5.906]
3	102.0 [4.016]	150 [5.906]	121.0 [4.764]	175 [6.890]
4	112.5 [4.429]	150 [5.906]	131.5 [5.177]	175 [6.890]
5	123.0 [4.843]	175 [6.890]	142.0 [5.591]	175 [6.890]
6	133.5 [5.256]	175 [6.890]	152.5 [6.004]	200 [7.874]
7	144.0 [5.669]	200 [7.874]	163.0 [6.417]	200 [7.874]
8	154.5 [6.083]	200 [7.874]	173.5 [6.831]	225 [8.858]

Note: When two piping blocks are used.
* For right-side mounting wiring (-R), add 5.5 mm [0.217 in] to the L1 (L2) dimension.

F10M Number of valves PHL Pilot specifications (Base piping type)

With manifold outlet port female thread block
Flat cable connector 20-pin specifications (side surface wiring)

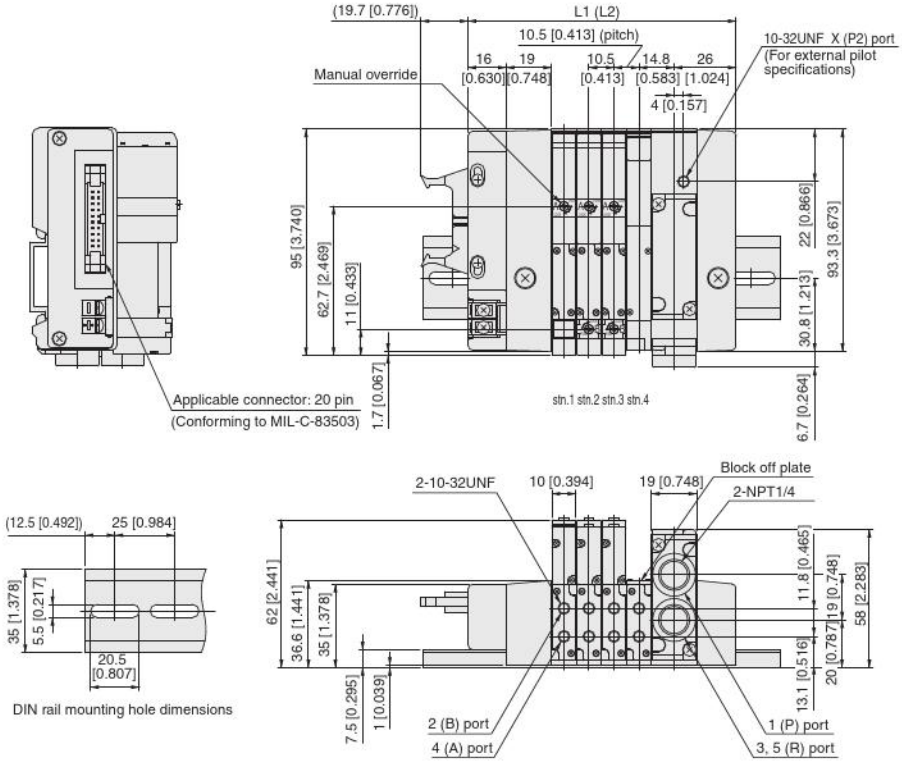

Unit dimensions

Number of units	L1	Length of DIN rail	L2 Note	Length of DIN rail Note
2	91.5 [3.602]	125 [4.921]	110.5 [4.350]	150 [5.906]
3	102.0 [4.016]	150 [5.906]	121.0 [4.764]	175 [6.890]
4	112.5 [4.429]	150 [5.906]	131.5 [5.177]	175 [6.890]
5	123.0 [4.843]	175 [6.890]	142.0 [5.591]	175 [6.890]
6	133.5 [5.256]	175 [6.890]	152.5 [6.004]	200 [7.874]
7	144.0 [5.669]	200 [7.874]	163.0 [6.417]	200 [7.874]
8	154.5 [6.083]	200 [7.874]	173.5 [6.831]	225 [8.858]
9	165.0 [6.496]	200 [7.874]	184.0 [7.244]	225 [8.858]
10	175.5 [6.909]	225 [8.858]	194.5 [7.657]	250 [9.843]
11	186.0 [7.323]	225 [8.858]	205.0 [8.071]	250 [9.843]
12	196.5 [7.736]	250 [9.843]	215.5 [8.484]	250 [9.843]
13	207.0 [8.150]	250 [9.843]	226.0 [8.898]	275 [10.827]
14	217.5 [8.563]	275 [10.827]	236.5 [9.311]	275 [10.827]
15	228.0 [8.976]	275 [10.827]	247.0 [9.724]	300 [11.811]
16	238.5 [9.390]	275 [10.827]	257.5 [10.138]	300 [11.811]

Note: When two piping blocks are used.
* For right-side mounting wiring (-R), add 5.5 mm [0.217 in] to the L1 (L2) dimension.

F10M Number of valves PH Pilot specifications (Direct piping type)

With valve outlet port female thread block
Flat cable connector 20-pin specifications

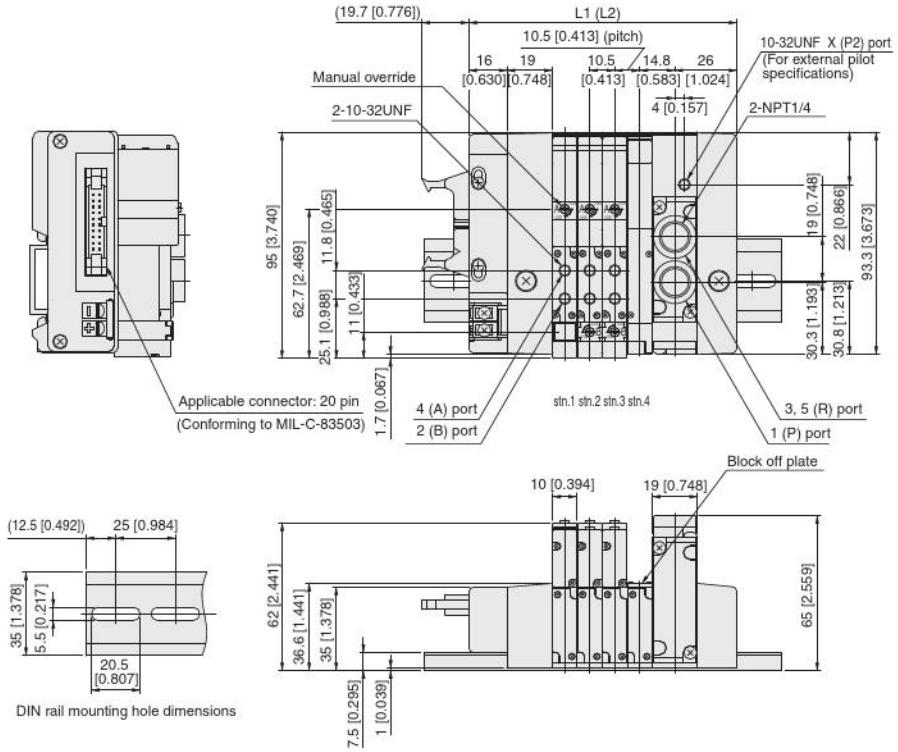

Unit dimensions

Number of units	L1	Length of DIN rail	L2 Note	Length of DIN rail Note
2	91.5 [3.602]	125 [4.921]	110.5 [4.350]	150 [5.906]
3	102.0 [4.016]	150 [5.906]	121.0 [4.764]	175 [6.890]
4	112.5 [4.429]	150 [5.906]	131.5 [5.177]	175 [6.890]
5	123.0 [4.843]	175 [6.890]	142.0 [5.591]	175 [6.890]
6	133.5 [5.256]	175 [6.890]	152.5 [6.004]	200 [7.874]
7	144.0 [5.669]	200 [7.874]	163.0 [6.417]	200 [7.874]
8	154.5 [6.083]	200 [7.874]	173.5 [6.831]	225 [8.858]
9	165.0 [6.496]	200 [7.874]	184.0 [7.244]	225 [8.858]
10	175.5 [6.909]	225 [8.858]	194.5 [7.657]	250 [9.843]
11	186.0 [7.323]	225 [8.858]	205.0 [8.071]	250 [9.843]
12	196.5 [7.736]	250 [9.843]	215.5 [8.484]	250 [9.843]
13	207.0 [8.150]	250 [9.843]	226.0 [8.898]	275 [10.827]
14	217.5 [8.563]	275 [10.827]	236.5 [9.311]	275 [10.827]
15	228.0 [8.976]	275 [10.827]	247.0 [9.724]	300 [11.811]
16	238.5 [9.390]	275 [10.827]	257.5 [10.138]	300 [11.811]

Note: When two piping blocks are used.
* For right-side mounting wiring (-R), add 5.5 mm [0.217 in] to the L1 (L2) dimension.

F10M Number of valves PHL Pilot specifications (Base piping type)

With manifold outlet port female thread block
Flat cable connector 26-pin specifications

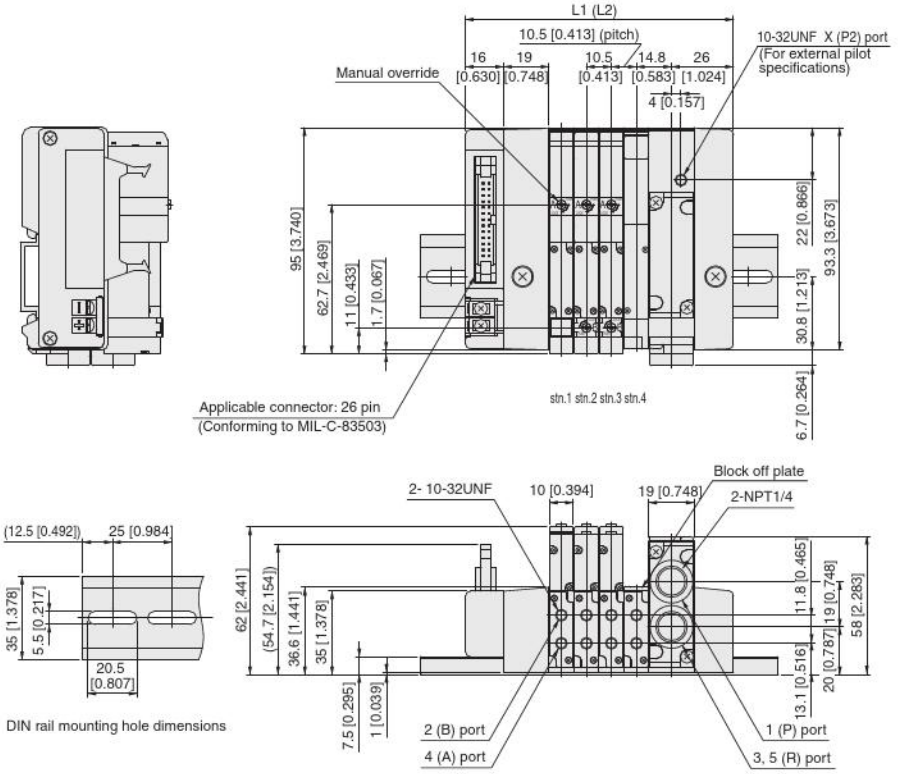

Unit dimensions

Number of units	L1	Length of DIN rail	L2 Note	Length of DIN rail Note
2	91.5 [3.602]	125 [4.921]	110.5 [4.350]	150 [5.906]
3	102.0 [4.016]	150 [5.906]	121.0 [4.764]	175 [6.890]
4	112.5 [4.429]	150 [5.906]	131.5 [5.177]	175 [6.890]
5	123.0 [4.843]	175 [6.890]	142.0 [5.591]	175 [6.890]
6	133.5 [5.256]	175 [6.890]	152.5 [6.004]	200 [7.874]
7	144.0 [5.669]	200 [7.874]	163.0 [6.417]	200 [7.874]
8	154.5 [6.083]	200 [7.874]	173.5 [6.831]	225 [8.858]
9	165.0 [6.496]	200 [7.874]	184.0 [7.244]	225 [8.858]
10	175.5 [6.909]	225 [8.858]	194.5 [7.657]	250 [9.843]
11	186.0 [7.323]	225 [8.858]	205.0 [8.071]	250 [9.843]
12	196.5 [7.736]	250 [9.843]	215.5 [8.484]	250 [9.843]
13	207.0 [8.150]	250 [9.843]	226.0 [8.898]	275 [10.827]
14	217.5 [8.563]	275 [10.827]	236.5 [9.311]	275 [10.827]
15	228.0 [8.976]	275 [10.827]	247.0 [9.724]	300 [11.811]
16	238.5 [9.390]	275 [10.827]	257.5 [10.138]	300 [11.811]
17	249.0 [9.803]	300 [11.811]	268.0 [10.551]	325 [12.795]
18	259.5 [10.217]	300 [11.811]	278.5 [10.965]	325 [12.795]
19	270.0 [10.630]	325 [12.795]	289.0 [11.378]	325 [12.795]
20	280.5 [11.043]	325 [12.795]	299.5 [11.791]	350 [13.780]

Note: When two piping blocks are used.
* For right-side mounting wiring (-R), add 5.5 mm [0.217 in] to the L1 (L2) dimension.

F10M Number of valves PH Pilot specifications (Direct piping type)

With valve outlet port female thread block
Flat cable connector 26-pin specifications

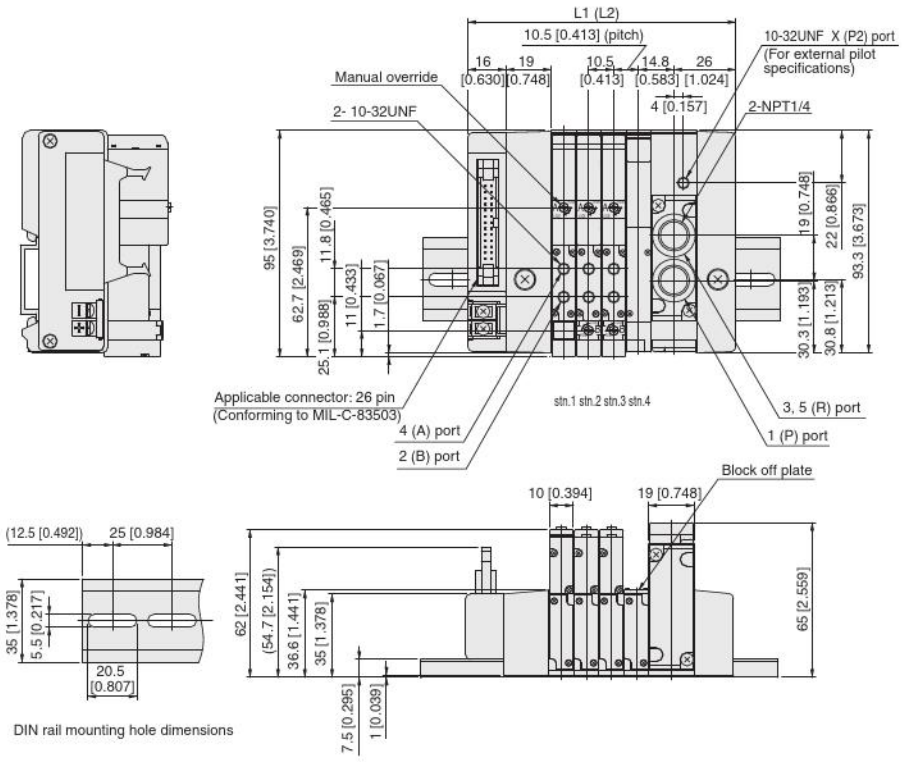

Unit dimensions

Number of units	L1	Length of DIN rail	L2 Note	Length of DIN rail Note
2	91.5 [3.602]	125 [4.921]	110.5 [4.350]	150 [5.906]
3	102.0 [4.016]	150 [5.906]	121.0 [4.764]	175 [6.890]
4	112.5 [4.429]	150 [5.906]	131.5 [5.177]	175 [6.890]
5	123.0 [4.843]	175 [6.890]	142.0 [5.591]	175 [6.890]
6	133.5 [5.256]	175 [6.890]	152.5 [6.004]	200 [7.874]
7	144.0 [5.669]	200 [7.874]	163.0 [6.417]	200 [7.874]
8	154.5 [6.083]	200 [7.874]	173.5 [6.831]	225 [8.858]
9	165.0 [6.496]	200 [7.874]	184.0 [7.244]	225 [8.858]
10	175.5 [6.909]	225 [8.858]	194.5 [7.657]	250 [9.843]
11	186.0 [7.323]	225 [8.858]	205.0 [8.071]	250 [9.843]
12	196.5 [7.736]	250 [9.843]	215.5 [8.484]	250 [9.843]
13	207.0 [8.150]	250 [9.843]	226.0 [8.898]	275 [10.827]
14	217.5 [8.563]	275 [10.827]	236.5 [9.311]	275 [10.827]
15	228.0 [8.976]	275 [10.827]	247.0 [9.724]	300 [11.811]
16	238.5 [9.390]	275 [10.827]	257.5 [10.138]	300 [11.811]
17	249.0 [9.803]	300 [11.811]	268.0 [10.551]	325 [12.795]
18	259.5 [10.217]	300 [11.811]	278.5 [10.965]	325 [12.795]
19	270.0 [10.630]	325 [12.795]	289.0 [11.378]	325 [12.795]
20	280.5 [11.043]	325 [12.795]	299.5 [11.791]	350 [13.780]

Note: When two piping blocks are used.
* For right-side mounting wiring (-R), add 5.5 mm [0.217 in] to the L1 (L2) dimension.

F10M Number of valves PHL Pilot specifications (Base piping type)

With manifold outlet port female thread block
D-sub connector 25-pin specifications

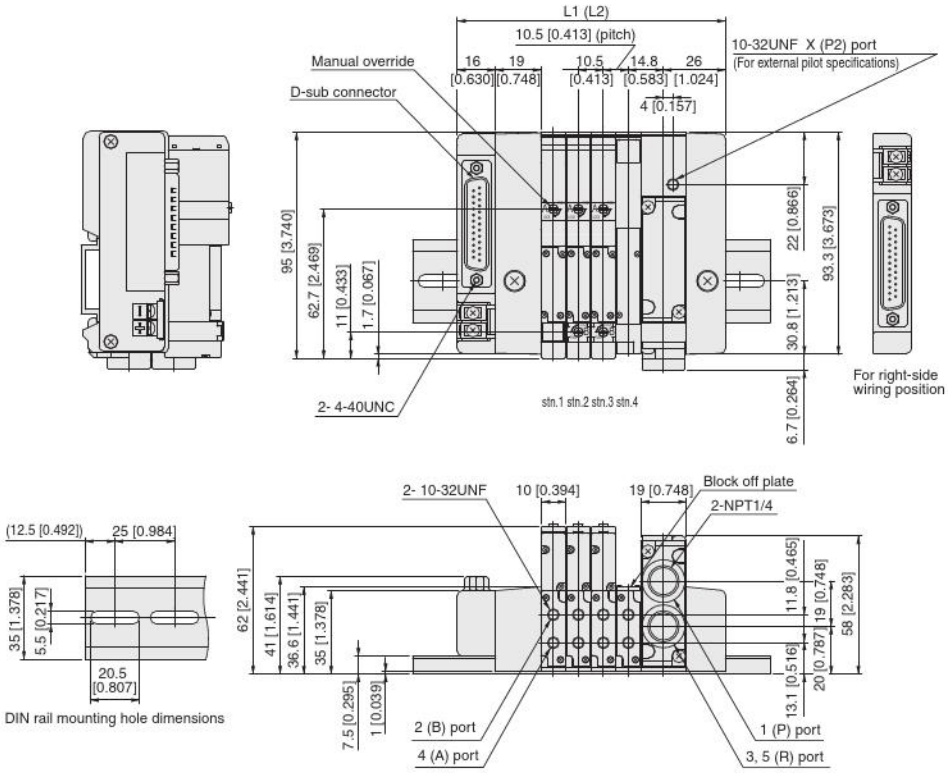

Unit dimensions

Number of units	L1	Length of DIN rail	L2 Note	Length of DIN rail Note
2	91.5 [3.602]	125 [4.921]	110.5 [4.350]	150 [5.906]
3	102.0 [4.016]	150 [5.906]	121.0 [4.764]	175 [6.890]
4	112.5 [4.429]	150 [5.906]	131.5 [5.177]	175 [6.890]
5	123.0 [4.843]	175 [6.890]	142.0 [5.591]	175 [6.890]
6	133.5 [5.256]	175 [6.890]	152.5 [6.004]	200 [7.874]
7	144.0 [5.669]	200 [7.874]	163.0 [6.417]	200 [7.874]
8	154.5 [6.083]	200 [7.874]	173.5 [6.831]	225 [8.858]
9	165.0 [6.496]	200 [7.874]	184.0 [7.244]	225 [8.858]
10	175.5 [6.909]	225 [8.858]	194.5 [7.657]	250 [9.843]
11	186.0 [7.323]	225 [8.858]	205.0 [8.071]	250 [9.843]
12	196.5 [7.736]	250 [9.843]	215.5 [8.484]	250 [9.843]
13	207.0 [8.150]	250 [9.843]	226.0 [8.898]	275 [10.827]
14	217.5 [8.563]	275 [10.827]	236.5 [9.311]	275 [10.827]
15	228.0 [8.976]	275 [10.827]	247.0 [9.724]	300 [11.811]
16	238.5 [9.390]	275 [10.827]	257.5 [10.138]	300 [11.811]
17	249.0 [9.803]	300 [11.811]	268.0 [10.551]	325 [12.795]
18	259.5 [10.217]	300 [11.811]	278.5 [10.965]	325 [12.795]
19	270.0 [10.630]	325 [12.795]	289.0 [11.378]	325 [12.795]
20	280.5 [11.043]	325 [12.795]	299.5 [11.791]	350 [13.780]

Note: When two piping blocks are used.
* For right-side mounting wiring (-R), add 5.5 mm [0.217 in] to the L1 (L2) dimension.

F10M Number of valves PH Pilot specifications (Direct piping type)

With valve outlet port female thread block
D-sub connector 25-pin specifications

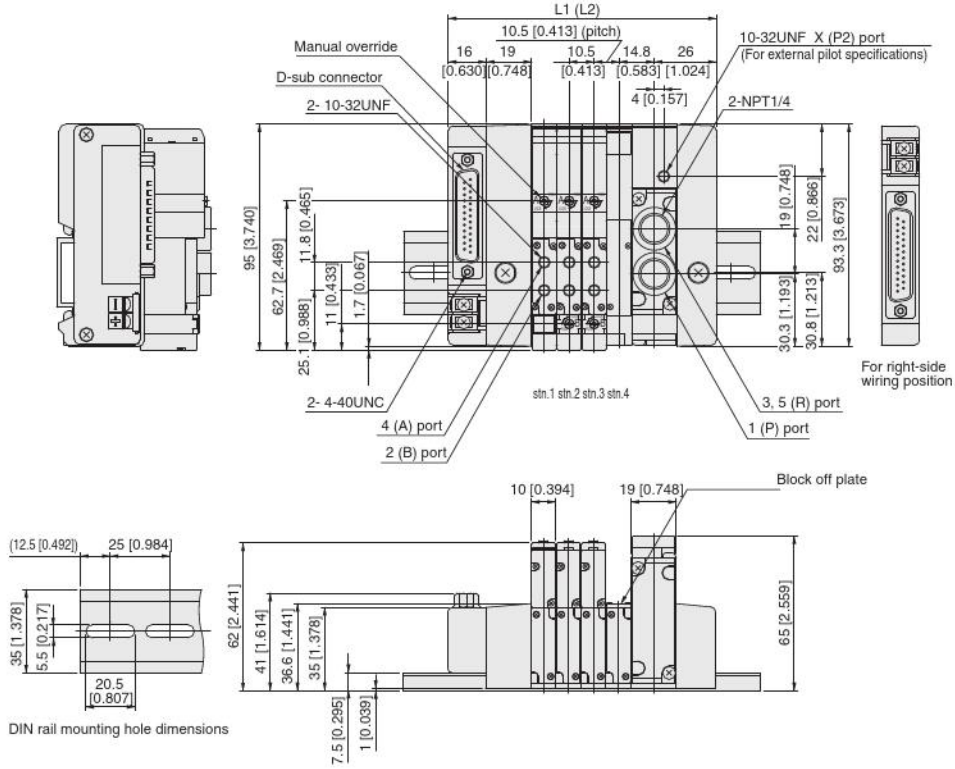

Unit dimensions

Number of units	L1	Length of DIN rail	L2 Note	Length of DIN rail Note
2	91.5 [3.602]	125 [4.921]	110.5 [4.350]	150 [5.906]
3	102.0 [4.016]	150 [5.906]	121.0 [4.764]	175 [6.890]
4	112.5 [4.429]	150 [5.906]	131.5 [5.177]	175 [6.890]
5	123.0 [4.843]	175 [6.890]	142.0 [5.591]	175 [6.890]
6	133.5 [5.256]	175 [6.890]	152.5 [6.004]	200 [7.874]
7	144.0 [5.669]	200 [7.874]	163.0 [6.417]	200 [7.874]
8	154.5 [6.083]	200 [7.874]	173.5 [6.831]	225 [8.858]
9	165.0 [6.496]	200 [7.874]	184.0 [7.244]	225 [8.858]
10	175.5 [6.909]	225 [8.858]	194.5 [7.657]	250 [9.843]
11	186.0 [7.323]	225 [8.858]	205.0 [8.071]	250 [9.843]
12	196.5 [7.736]	250 [9.843]	215.5 [8.484]	250 [9.843]
13	207.0 [8.150]	250 [9.843]	226.0 [8.898]	275 [10.827]
14	217.5 [8.563]	275 [10.827]	236.5 [9.311]	275 [10.827]
15	228.0 [8.976]	275 [10.827]	247.0 [9.724]	300 [11.811]
16	238.5 [9.390]	275 [10.827]	257.5 [10.138]	300 [11.811]
17	249.0 [9.803]	300 [11.811]	268.0 [10.551]	325 [12.795]
18	259.5 [10.217]	300 [11.811]	278.5 [10.965]	325 [12.795]
19	270.0 [10.630]	325 [12.795]	289.0 [11.378]	325 [12.795]
20	280.5 [11.043]	325 [12.795]	299.5 [11.791]	350 [13.780]

Note: When two piping blocks are used.
* For right-side mounting wiring (-R), add 5.5 mm [0.217 in] to the L1 (L2) dimension.

F10M Number of valves PHL Pilot specifications (Base piping type)

With manifold outlet port female thread block
D-sub connector 37-pin specifications

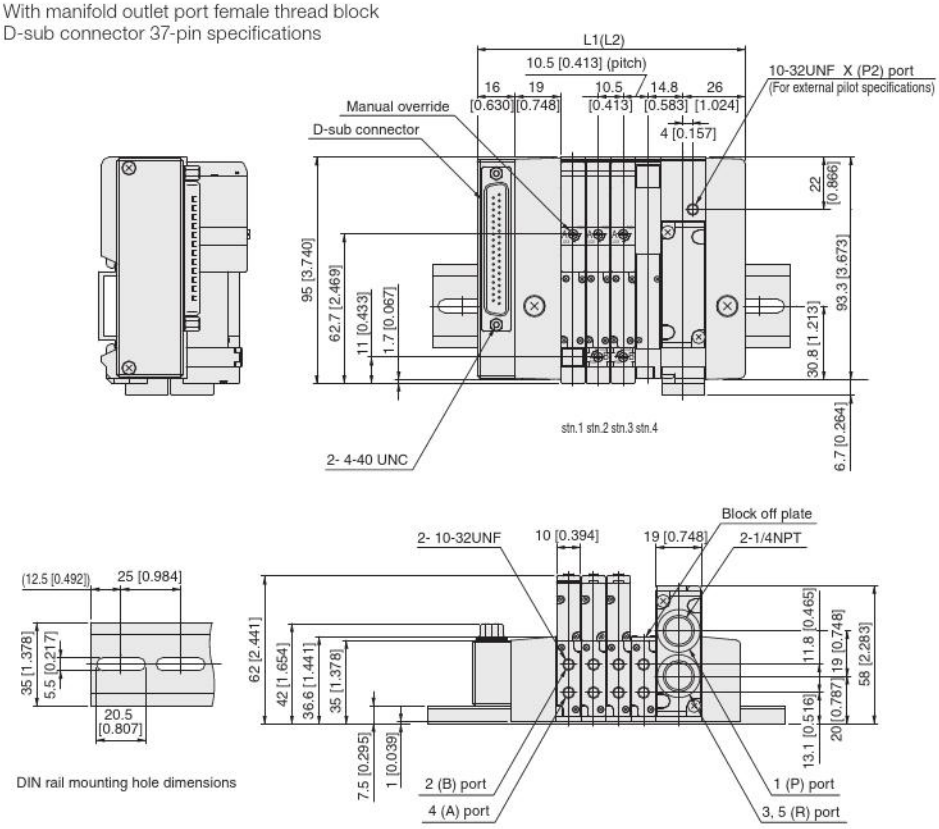

Unit dimensions

Number of units	L1	Length of DIN rail	L2 Note	Length of DIN rail Note
2	91.5 [3.602]	125 [4.921]	110.5 [4.350]	150 [5.906]
3	102.0 [4.016]	150 [5.906]	121.0 [4.764]	175 [6.890]
4	112.5 [4.429]	150 [5.906]	131.5 [5.177]	175 [6.890]
5	123.0 [4.843]	175 [6.890]	142.0 [5.591]	175 [6.890]
6	133.5 [5.256]	175 [6.890]	152.5 [6.004]	200 [7.874]
7	144.0 [5.669]	200 [7.874]	163.0 [6.417]	200 [7.874]
8	154.5 [6.083]	200 [7.874]	173.5 [6.831]	225 [8.858]
9	165.0 [6.496]	200 [7.874]	184.0 [7.244]	225 [8.858]
10	175.5 [6.909]	225 [8.858]	194.5 [7.657]	250 [9.843]
11	186.0 [7.323]	225 [8.858]	205.0 [8.071]	250 [9.843]
12	196.5 [7.736]	250 [9.843]	215.5 [8.484]	250 [9.843]
13	207.0 [8.150]	250 [9.843]	226.0 [8.898]	275 [10.827]
14	217.5 [8.563]	275 [10.827]	236.5 [9.311]	275 [10.827]
15	228.0 [8.976]	275 [10.827]	247.0 [9.724]	300 [11.811]
16	238.5 [9.390]	275 [10.827]	257.5 [10.138]	300 [11.811]
17	249.0 [9.803]	300 [11.811]	268.0 [10.551]	325 [12.795]
18	259.5 [10.217]	300 [11.811]	278.5 [10.965]	325 [12.795]
19	270.0 [10.630]	325 [12.795]	289.0 [11.378]	325 [12.795]
20	280.5 [11.043]	325 [12.795]	299.5 [11.791]	350 [13.780]

Note: When two piping blocks are used.
* For right-side mounting wiring (-R), add 5.5 mm [0.217 in] to the L1 (L2) dimension.

F10M Number of valves PH Pilot specifications (Direct piping type)

With valve outlet port female thread block
D-sub connector 37-pin specifications

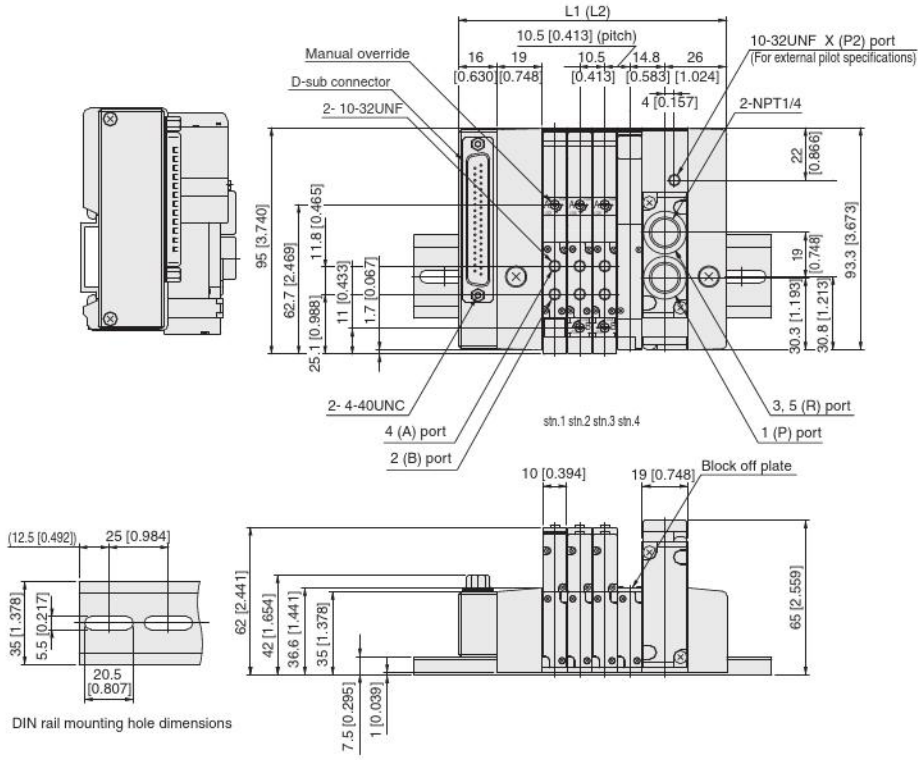

Unit dimensions

Number of units	L1	Length of DIN rail	L2 Note	Length of DIN rail Note
2	91.5 [3.602]	125 [4.921]	110.5 [4.350]	150 [5.906]
3	102.0 [4.016]	150 [5.906]	121.0 [4.764]	175 [6.890]
4	112.5 [4.429]	150 [5.906]	131.5 [5.177]	175 [6.890]
5	123.0 [4.843]	175 [6.890]	142.0 [5.591]	175 [6.890]
6	133.5 [5.256]	175 [6.890]	152.5 [6.004]	200 [7.874]
7	144.0 [5.669]	200 [7.874]	163.0 [6.417]	200 [7.874]
8	154.5 [6.083]	200 [7.874]	173.5 [6.831]	225 [8.858]
9	165.0 [6.496]	200 [7.874]	184.0 [7.244]	225 [8.858]
10	175.5 [6.909]	225 [8.858]	194.5 [7.657]	250 [9.843]
11	186.0 [7.323]	225 [8.858]	205.0 [8.071]	250 [9.843]
12	196.5 [7.736]	250 [9.843]	215.5 [8.484]	250 [9.843]
13	207.0 [8.150]	250 [9.843]	226.0 [8.898]	275 [10.827]
14	217.5 [8.563]	275 [10.827]	236.5 [9.311]	275 [10.827]
15	228.0 [8.976]	275 [10.827]	247.0 [9.724]	300 [11.811]
16	238.5 [9.390]	275 [10.827]	257.5 [10.138]	300 [11.811]
17	249.0 [9.803]	300 [11.811]	268.0 [10.551]	325 [12.795]
18	259.5 [10.217]	300 [11.811]	278.5 [10.965]	325 [12.795]
19	270.0 [10.630]	325 [12.795]	289.0 [11.378]	325 [12.795]
20	280.5 [11.043]	325 [12.795]	299.5 [11.791]	350 [13.780]

Note: When two piping blocks are used.
* For right-side mounting wiring (-R), add 5.5 mm [0.217 in] to the L1 (L2) dimension.

F10M Number of valves PHL Pilot specifications (Base piping type)

With manifold outlet port female thread block
Terminal block type

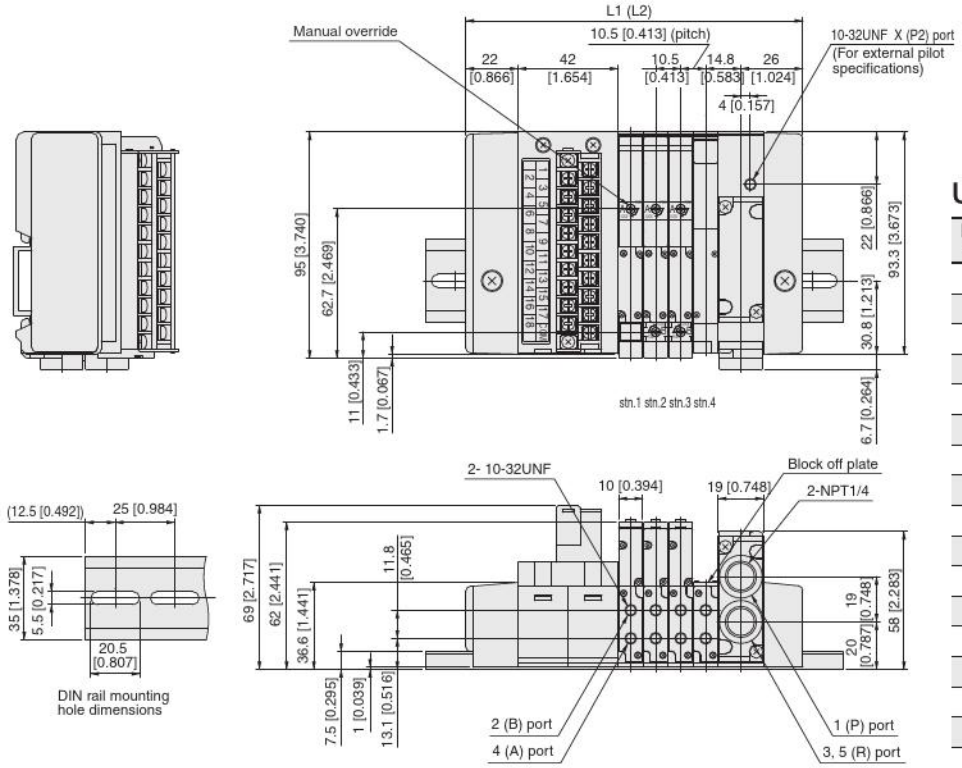

Unit dimensions

Number of units	L1	Length of DIN rail	L2 Note	Length of DIN rail Note
2	120.5 [4.744]	150 [5.906]	139.5 [5.492]	175 [6.890]
3	131.0 [5.157]	175 [6.890]	150.0 [5.906]	175 [6.890]
4	141.5 [5.571]	175 [6.890]	160.5 [6.319]	200 [7.874]
5	152.0 [5.984]	200 [7.874]	171.0 [6.732]	200 [7.874]
6	162.5 [6.398]	200 [7.874]	181.5 [7.146]	225 [8.858]
7	173.0 [6.811]	200 [7.874]	192.0 [7.559]	225 [8.858]
8	183.5 [7.224]	225 [8.858]	202.5 [7.972]	250 [9.843]
9	194.0 [7.638]	225 [8.858]	213.0 [8.386]	250 [9.843]
10	204.5 [8.051]	250 [9.843]	223.5 [8.799]	250 [9.843]
11	215.0 [8.465]	250 [9.843]	234.0 [9.213]	275 [10.827]
12	225.5 [8.878]	275 [10.827]	244.5 [9.626]	275 [10.827]
13	236.0 [9.291]	275 [10.827]	255.0 [10.039]	300 [11.811]
14	246.5 [9.705]	275 [10.827]	265.5 [10.453]	300 [11.811]
15	257.0 [10.118]	300 [11.811]	276.0 [10.866]	325 [12.795]
16	267.5 [10.531]	300 [11.811]	286.5 [11.280]	325 [12.795]
17	278.0 [10.945]	325 [12.795]	297.0 [11.693]	325 [12.795]
18	288.5 [11.358]	325 [12.795]	307.5 [12.106]	350 [13.780]

Note: When two piping blocks are used.

F10M Number of valves PH Pilot specifications (Direct piping type)

With valve outlet port female thread block
Terminal block type

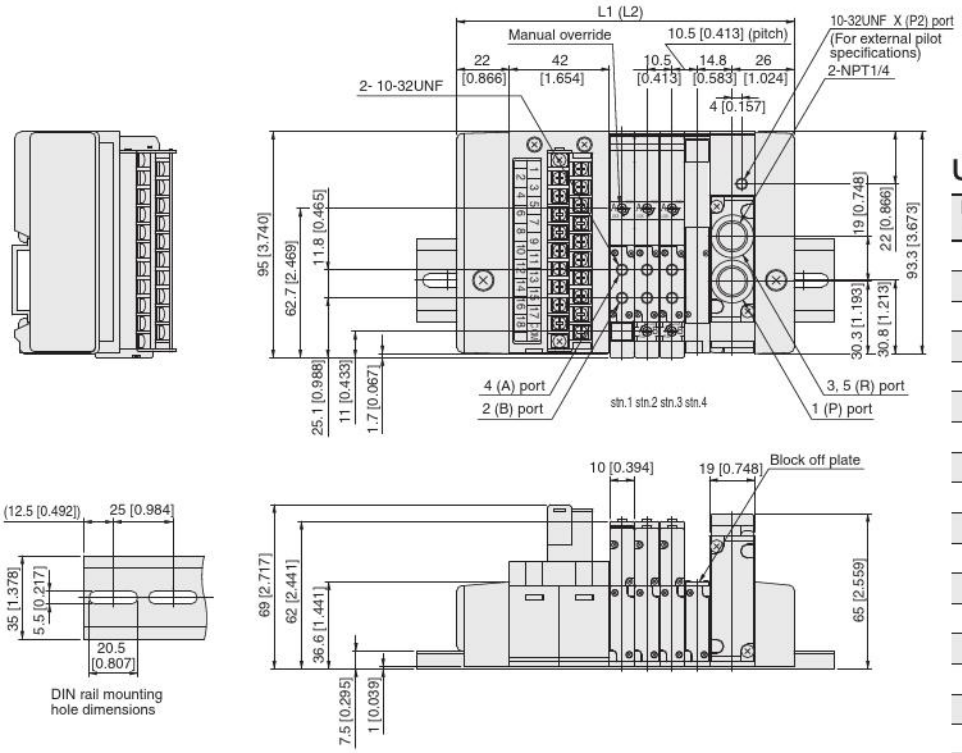

Unit dimensions

Number of units	L1	Length of DIN rail	L2 Note	Length of DIN rail Note
2	120.5 [4.744]	150 [5.906]	139.5 [5.492]	175 [6.890]
3	131.0 [5.157]	175 [6.890]	150.0 [5.906]	175 [6.890]
4	141.5 [5.571]	175 [6.890]	160.5 [6.319]	200 [7.874]
5	152.0 [5.984]	200 [7.874]	171.0 [6.732]	200 [7.874]
6	162.5 [6.398]	200 [7.874]	181.5 [7.146]	225 [8.858]
7	173.0 [6.811]	200 [7.874]	192.0 [7.559]	225 [8.858]
8	183.5 [7.224]	225 [8.858]	202.5 [7.972]	250 [9.843]
9	194.0 [7.638]	225 [8.858]	213.0 [8.386]	250 [9.843]
10	204.5 [8.051]	250 [9.843]	223.5 [8.799]	250 [9.843]
11	215.0 [8.465]	250 [9.843]	234.0 [9.213]	275 [10.827]
12	225.5 [8.878]	275 [10.827]	244.5 [9.626]	275 [10.827]
13	236.0 [9.291]	275 [10.827]	255.0 [10.039]	300 [11.811]
14	246.5 [9.705]	275 [10.827]	265.5 [10.453]	300 [11.811]
15	257.0 [10.118]	300 [11.811]	276.0 [10.866]	325 [12.795]
16	267.5 [10.531]	300 [11.811]	286.5 [11.280]	325 [12.795]
17	278.0 [10.945]	325 [12.795]	297.0 [11.693]	325 [12.795]
18	288.5 [11.358]	325 [12.795]	307.5 [12.106]	350 [13.780]

Note: When two piping blocks are used.

F10M [Number of valves] S J/M/L [Pilot specifications] (Base piping type)

With manifold outlet port dual use fitting block

(Integrated serial transmission block compatible model)

*For dimensions of EtherCAT, see p. 139.

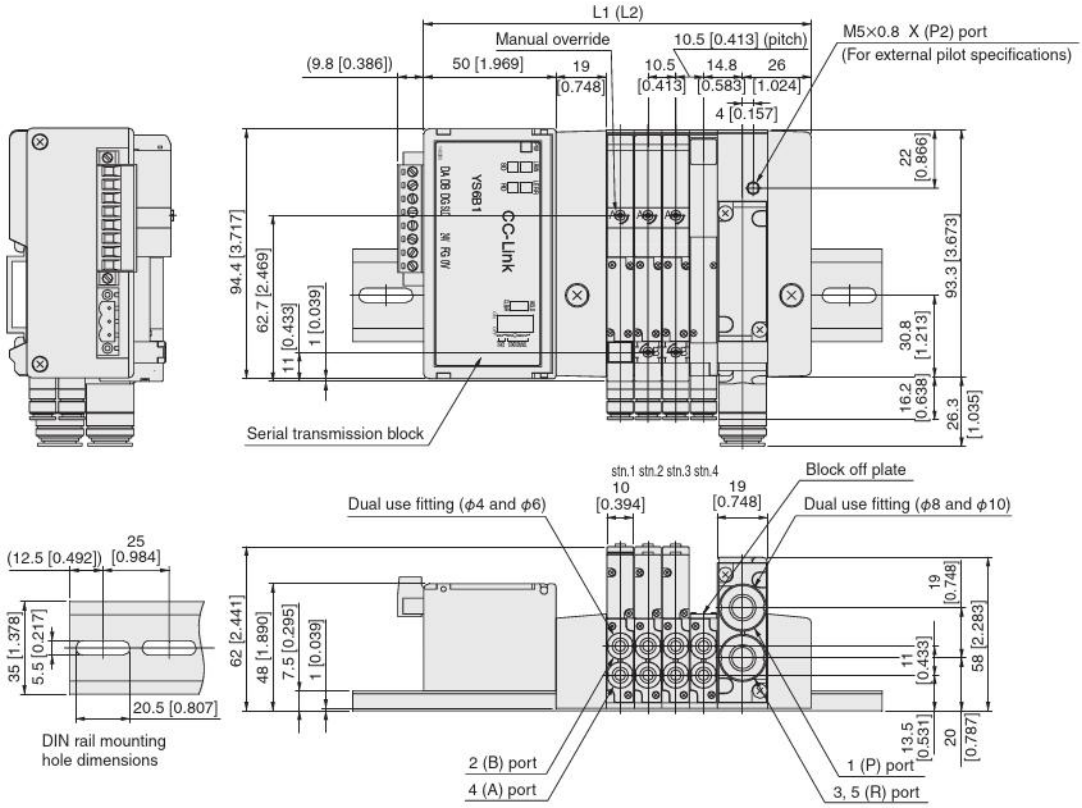

Unit dimensions

Number of units	L1	Length of DIN rail	L2 Note	Length of DIN rail Note
2	125.5 [4.941]	175 [6.890]	144.5 [5.689]	200 [7.874]
3	136.0 [5.354]	200 [7.874]	155.0 [6.102]	200 [7.874]
4	146.5 [5.768]	200 [7.874]	165.5 [6.516]	225 [8.858]
5	157.0 [6.181]	200 [7.874]	176.0 [6.929]	225 [8.858]
6	167.5 [6.594]	225 [8.858]	186.5 [7.343]	250 [9.843]
7	178.0 [7.008]	225 [8.858]	197.0 [7.756]	250 [9.843]
8	188.5 [7.421]	250 [9.843]	207.5 [8.169]	250 [9.843]
9	199.0 [7.835]	250 [9.843]	218.0 [8.583]	275 [10.827]
10	209.5 [8.248]	250 [9.843]	228.5 [8.996]	275 [10.827]
11	220.0 [8.661]	275 [10.827]	239.0 [9.409]	300 [11.811]
12	230.5 [9.075]	275 [10.827]	249.5 [9.823]	300 [11.811]
13	241.0 [9.488]	300 [11.811]	260.0 [10.236]	300 [11.811]
14	251.5 [9.902]	300 [11.811]	270.5 [10.650]	325 [12.795]
15	262.0 [10.315]	325 [12.795]	281.0 [11.063]	325 [12.795]
16	272.5 [10.728]	325 [12.795]	291.5 [11.476]	350 [13.780]
17	283.0 [11.142]	350 [13.780]	302.0 [11.890]	375 [14.764]
18	293.5 [11.555]	350 [13.780]	312.5 [12.303]	375 [14.764]
19	304.0 [11.969]	350 [13.780]	323.0 [12.717]	375 [14.764]
20	314.5 [12.382]	375 [14.764]	333.5 [13.130]	400 [15.748]

Note: When two piping blocks are used.
* For right-side mounting wiring (-R), add 5.5 mm [0.217 in] to the L1 (L2) dimension.

F10M Number of valves SHL Pilot specifications (Base piping type)

With manifold outlet port female thread block

(Integrated serial transmission block compatible manifold)

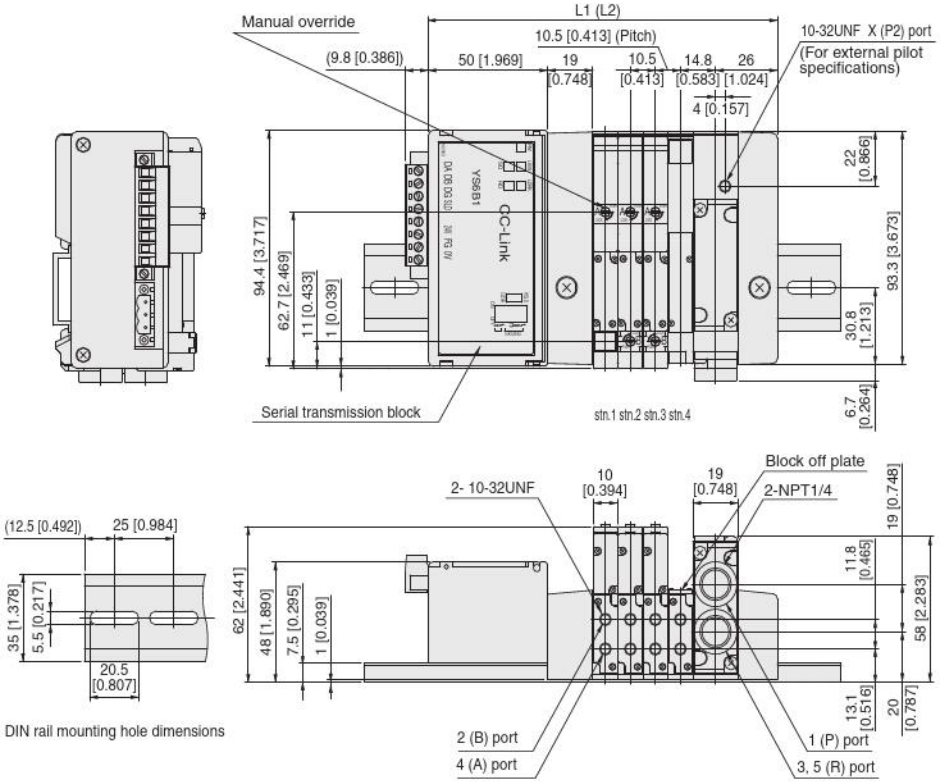

Unit dimensions

Number of units	L1	Length of DIN rail	L2 Note	Length of DIN rail Note
2	125.5 [4.941]	175 [6.890]	144.5 [5.689]	200 [7.874]
3	136.0 [5.354]	200 [7.874]	155.0 [6.102]	200 [7.874]
4	146.5 [5.768]	200 [7.874]	165.5 [6.516]	225 [8.858]
5	157.0 [6.181]	200 [7.874]	176.0 [6.929]	225 [8.858]
6	167.5 [6.594]	225 [8.858]	186.5 [7.343]	250 [9.843]
7	178.0 [7.008]	225 [8.858]	197.0 [7.756]	250 [9.843]
8	188.5 [7.421]	250 [9.843]	207.5 [8.169]	250 [9.843]
9	199.0 [7.835]	250 [9.843]	218.0 [8.583]	275 [10.827]
10	209.5 [8.248]	250 [9.843]	228.5 [8.996]	275 [10.827]
11	220.0 [8.661]	275 [10.827]	239.0 [9.409]	300 [11.811]
12	230.5 [9.075]	275 [10.827]	249.5 [9.823]	300 [11.811]
13	241.0 [9.488]	300 [11.811]	260.0 [10.236]	300 [11.811]
14	251.5 [9.902]	300 [11.811]	270.5 [10.650]	325 [12.795]
15	262.0 [10.315]	325 [12.795]	281.0 [11.063]	325 [12.795]
16	272.5 [10.728]	325 [12.795]	291.5 [11.476]	350 [13.780]
17	283.0 [11.142]	350 [13.780]	302.0 [11.890]	375 [14.764]
18	293.5 [11.555]	350 [13.780]	312.5 [12.303]	375 [14.764]
19	304.0 [11.969]	350 [13.780]	323.0 [12.717]	375 [14.764]
20	314.5 [12.382]	375 [14.764]	333.5 [13.130]	400 [15.748]

Note: When two piping blocks are used.
* For right-side mounting wiring (-R), add 5.5 mm [0.217 in] to the L1 (L2) dimension.

F10M Number of valves SH Pilot specifications (Direct piping type)

With valve outlet port female thread block

(Integrated serial transmission block compatible manifold)

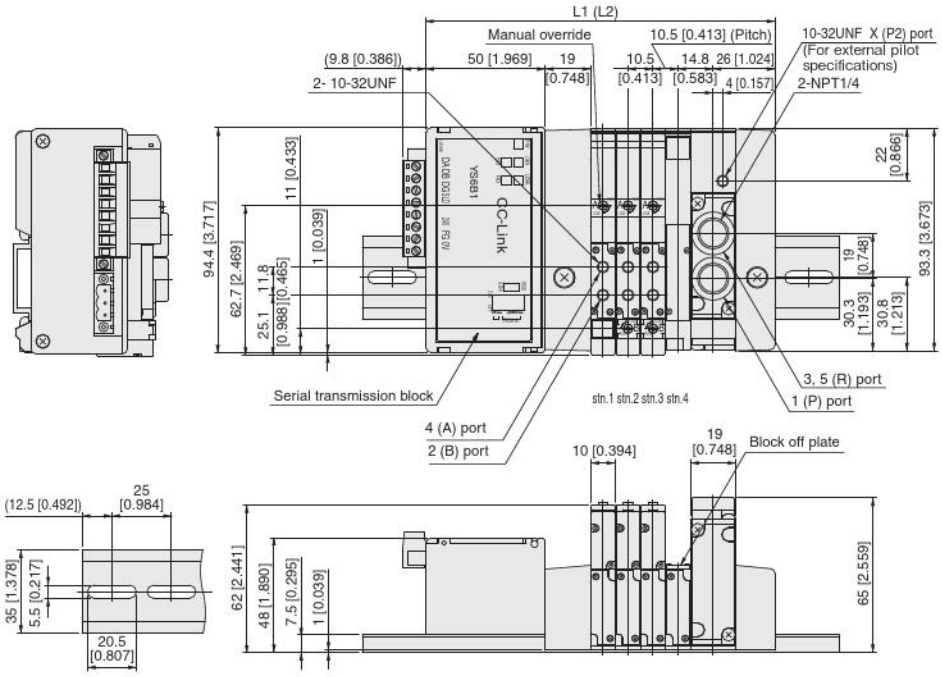

Unit dimensions

Number of units	L1	Length of DIN rail	L2 Note	Length of DIN rail Note
2	125.5 [4.941]	175 [6.890]	144.5 [5.689]	200 [7.874]
3	136.0 [5.354]	200 [7.874]	155.0 [6.102]	200 [7.874]
4	146.5 [5.768]	200 [7.874]	165.5 [6.516]	225 [8.858]
5	157.0 [6.181]	200 [7.874]	176.0 [6.929]	225 [8.858]
6	167.5 [6.594]	225 [8.858]	186.5 [7.343]	250 [9.843]
7	178.0 [7.008]	225 [8.858]	197.0 [7.756]	250 [9.843]
8	188.5 [7.421]	250 [9.843]	207.5 [8.169]	250 [9.843]
9	199.0 [7.835]	250 [9.843]	218.0 [8.583]	275 [10.827]
10	209.5 [8.248]	250 [9.843]	228.5 [8.996]	275 [10.827]
11	220.0 [8.661]	275 [10.827]	239.0 [9.409]	300 [11.811]
12	230.5 [9.075]	275 [10.827]	249.5 [9.823]	300 [11.811]
13	241.0 [9.488]	300 [11.811]	260.0 [10.236]	300 [11.811]
14	251.5 [9.902]	300 [11.811]	270.5 [10.650]	325 [12.795]
15	262.0 [10.315]	325 [12.795]	281.0 [11.063]	325 [12.795]
16	272.5 [10.728]	325 [12.795]	291.5 [11.476]	350 [13.780]
17	283.0 [11.142]	350 [13.780]	302.0 [11.890]	375 [14.764]
18	293.5 [11.555]	350 [13.780]	312.5 [12.303]	375 [14.764]
19	304.0 [11.969]	350 [13.780]	323.0 [12.717]	375 [14.764]
20	314.5 [12.382]	375 [14.764]	333.5 [13.130]	400 [15.748]

Note: When two piping blocks are used.
* For right-side mounting wiring (-R), add 5.5 mm [0.217 in] to the L1 (L2) dimension.

F10M [Number of valves] S[J/M/L] [Pilot specifications] (Base piping type)

With manifold outlet port dual use fitting block

(EtherCAT/EtherNet/IP) *The figure shows EtherCAT.

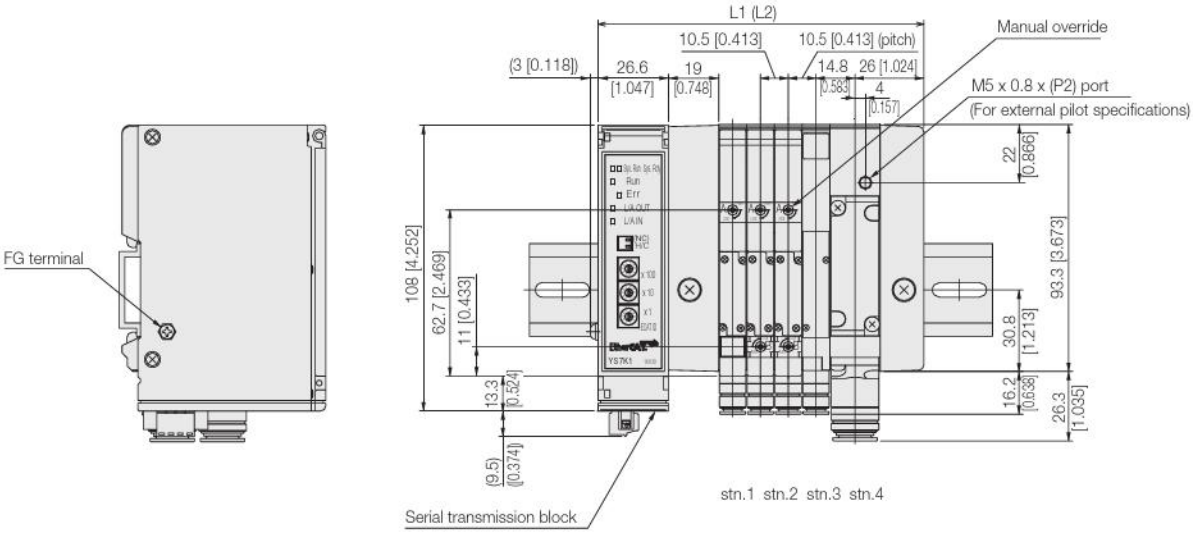

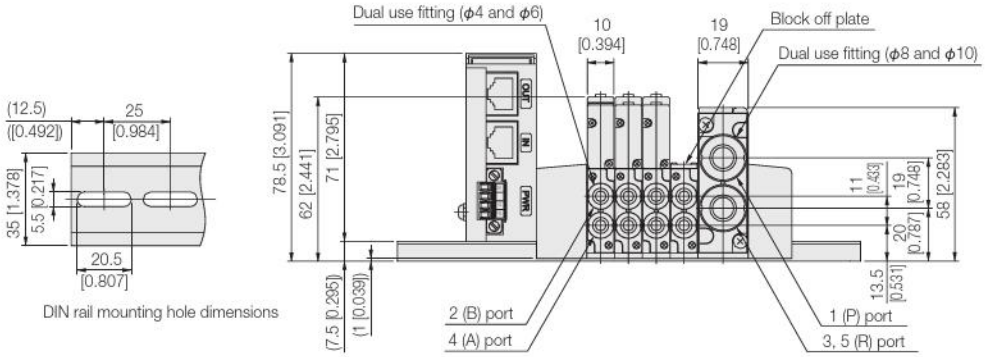

Unit dimensions

Number of units	L1	Length of DIN rail	L2 Note	Length of DIN rail Note
2	102.1 [4.020]	150 [5.906]	121.1 [4.768]	175 [6.890]
3	112.6 [4.433]	175 [6.890]	131.6 [5.181]	175 [6.890]
4	123.1 [4.846]	175 [6.890]	142.1 [5.594]	200 [7.874]
5	133.6 [5.260]	175 [6.890]	152.6 [6.008]	200 [7.874]
6	144.1 [5.673]	200 [7.874]	163.1 [6.421]	225 [8.858]
7	154.6 [6.087]	200 [7.874]	173.6 [6.835]	225 [8.858]
8	165.1 [6.500]	225 [8.858]	184.1 [7.248]	225 [8.858]
9	175.6 [6.913]	225 [8.858]	194.6 [7.661]	250 [9.843]
10	186.1 [7.327]	225 [8.858]	205.1 [8.075]	250 [9.843]
11	196.6 [7.740]	250 [9.843]	215.6 [8.488]	275 [10.827]
12	207.1 [8.154]	250 [9.843]	226.1 [8.902]	275 [10.827]
13	217.6 [8.567]	275 [10.827]	236.6 [9.315]	275 [10.827]
14	228.1 [8.980]	275 [10.827]	247.1 [9.728]	300 [11.811]
15	238.6 [9.394]	300 [11.811]	257.6 [10.142]	300 [11.811]
16	249.1 [9.807]	300 [11.811]	268.1 [10.555]	325 [12.795]
17	259.6 [10.220]	325 [12.795]	278.6 [10.969]	350 [13.780]
18	270.1 [10.633]	325 [12.795]	289.1 [11.382]	350 [13.780]
19	280.6 [11.047]	325 [12.795]	299.6 [11.795]	350 [13.780]
20	291.1 [11.461]	350 [13.780]	310.1 [12.209]	375 [14.764]

Note: When two piping blocks are used.
* For right-side mounting wiring (-R), add 5.5 mm [0.217 in] to the L1 (L2) dimension.

F10M [Number of valves] S J/M/L [Pilot specifications] (Base piping type)

With manifold outlet port dual use fitting block

(Stand alone serial transmission block compatible manifold)

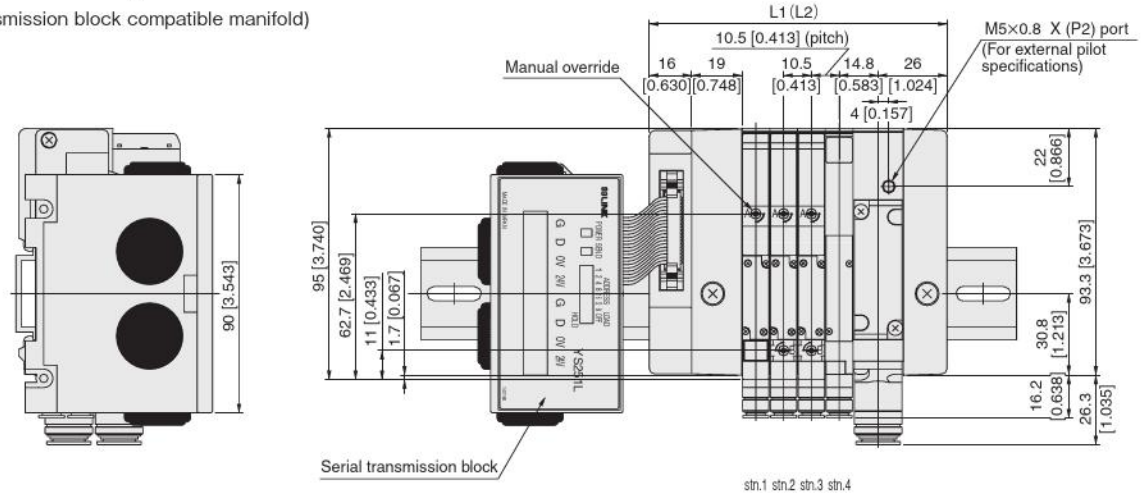

Unit dimensions

Number of units	L1	Length of DIN rail	L2 Note	Length of DIN rail Note
2	91.5 [3.602]	200 [7.874]	110.5 [4.350]	200 [7.874]
3	102.0 [4.016]	200 [7.874]	121.0 [4.764]	225 [8.858]
4	112.5 [4.429]	225 [8.858]	131.5 [5.177]	225 [8.858]
5	123.0 [4.843]	225 [8.858]	142.0 [5.591]	250 [9.843]
6	133.5 [5.256]	225 [8.858]	152.5 [6.004]	250 [9.843]
7	144.0 [5.669]	250 [9.843]	163.0 [6.417]	275 [10.827]
8	154.5 [6.083]	250 [9.843]	173.5 [6.831]	275 [10.827]
9	165.0 [6.496]	275 [10.827]	184.0 [7.244]	275 [10.827]
10	175.5 [6.909]	275 [10.827]	194.5 [7.657]	300 [11.811]
11	186.0 [7.323]	300 [11.811]	205.0 [8.071]	300 [11.811]
12	196.5 [7.736]	300 [11.811]	215.5 [8.484]	325 [12.795]
13	207.0 [8.150]	300 [11.811]	226.0 [8.898]	325 [12.795]
14	217.5 [8.563]	325 [12.795]	236.5 [9.311]	350 [13.780]
15	228.0 [8.976]	325 [12.795]	247.0 [9.724]	350 [13.780]
16	238.5 [9.390]	350 [13.780]	257.5 [10.138]	350 [13.780]

Note: When two piping blocks are used.
* For right-side mounting wiring (-R), add 5.5 mm [0.217 in] to the L1 (L2) dimension.

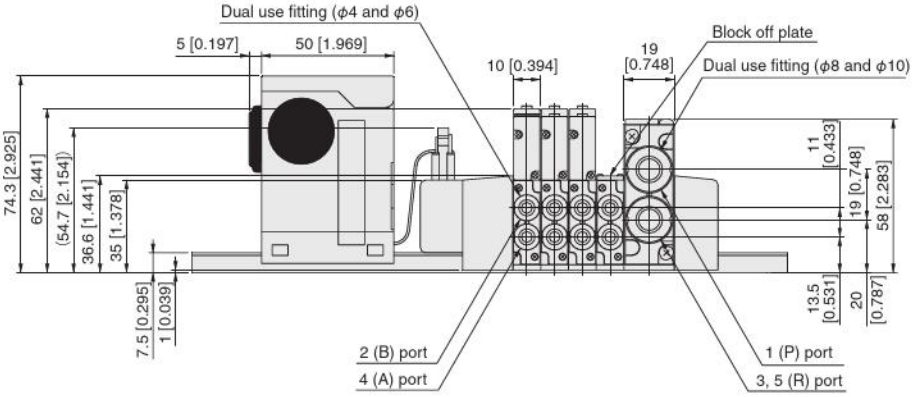

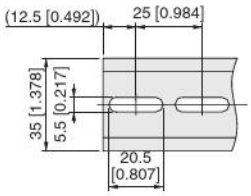

DIN rail mounting hole dimensions

Additional Parts (available separately)

● Muffler: **KM-J10** for both plug-in and non-plug-in

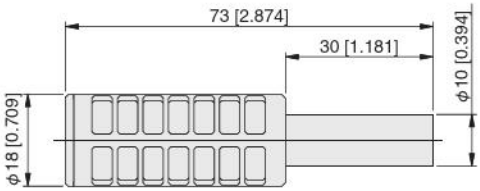

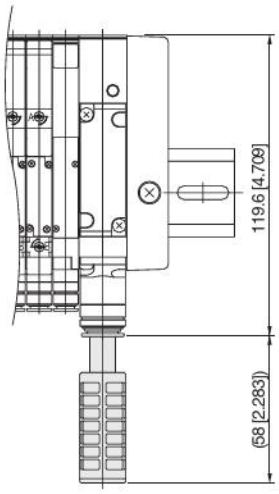

F10M Number of valves SHL Pilot specifications (Base piping type)

With manifold outlet port female thread block

(Stand alone serial transmission block compatible manifold)

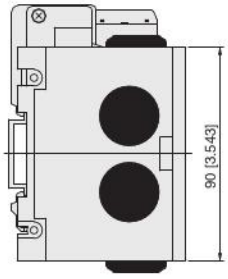

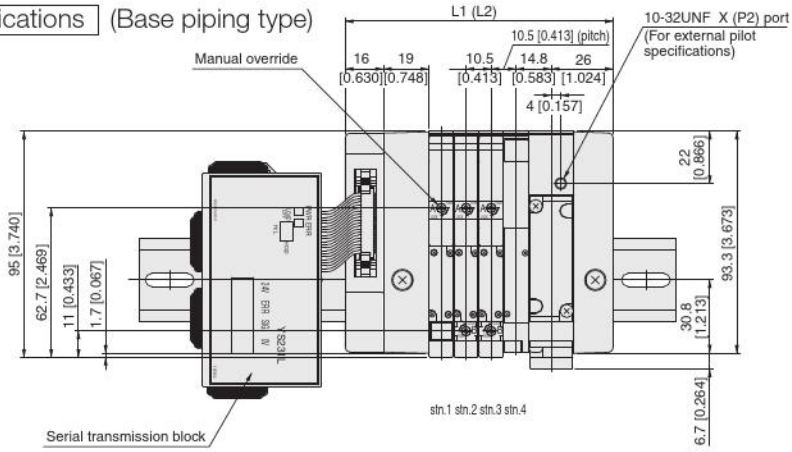

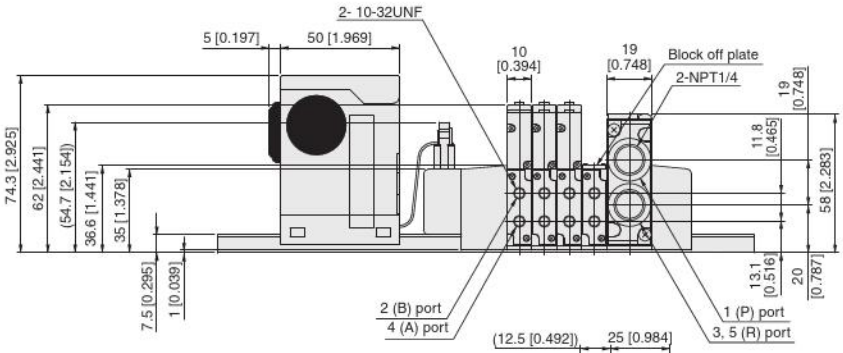

Unit dimensions

Number of units	L1	Length of DIN rail	L2 Note	Length of DIN rail Note
2	91.5 [3.602]	200 [7.874]	110.5 [4.350]	200 [7.874]
3	102.0 [4.016]	200 [7.874]	121.0 [4.764]	225 [8.858]
4	112.5 [4.429]	225 [8.858]	131.5 [5.177]	225 [8.858]
5	123.0 [4.843]	225 [8.858]	142.0 [5.591]	250 [9.843]
6	133.5 [5.256]	225 [8.858]	152.5 [6.004]	250 [9.843]
7	144.0 [5.669]	250 [9.843]	163.0 [6.417]	275 [10.827]
8	154.5 [6.083]	250 [9.843]	173.5 [6.831]	275 [10.827]
9	165.0 [6.496]	275 [10.827]	184.0 [7.244]	275 [10.827]
10	175.5 [6.909]	275 [10.827]	194.5 [7.657]	300 [11.811]
11	186.0 [7.323]	300 [11.811]	205.0 [8.071]	300 [11.811]
12	196.5 [7.736]	300 [11.811]	215.5 [8.484]	325 [12.795]
13	207.0 [8.150]	300 [11.811]	226.0 [8.898]	325 [12.795]
14	217.5 [8.563]	325 [12.795]	236.5 [9.311]	350 [13.780]
15	228.0 [8.976]	325 [12.795]	247.0 [9.724]	350 [13.780]
16	238.5 [9.390]	350 [13.780]	257.5 [10.138]	350 [13.780]

Note: When two piping blocks are used.
* For right-side mounting wiring (-R), add 5.5 mm [0.217 in] to the L1 (L2) dimension.

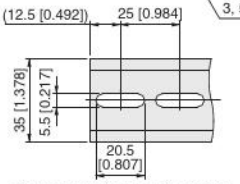

DIN rail mounting hole dimensions

F10M Number of valves SH Pilot specifications (Direct piping type)

With valve outlet port female thread block

(Stand alone serial transmission block compatible manifold)

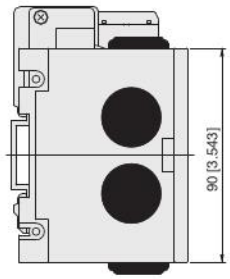

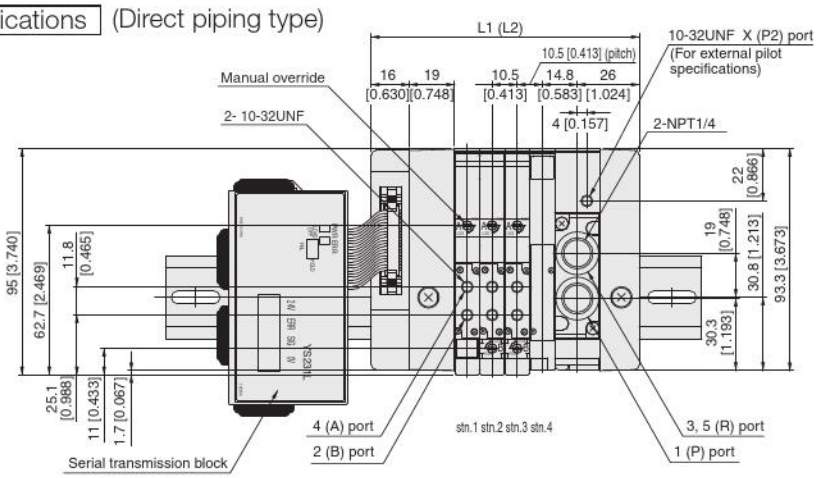

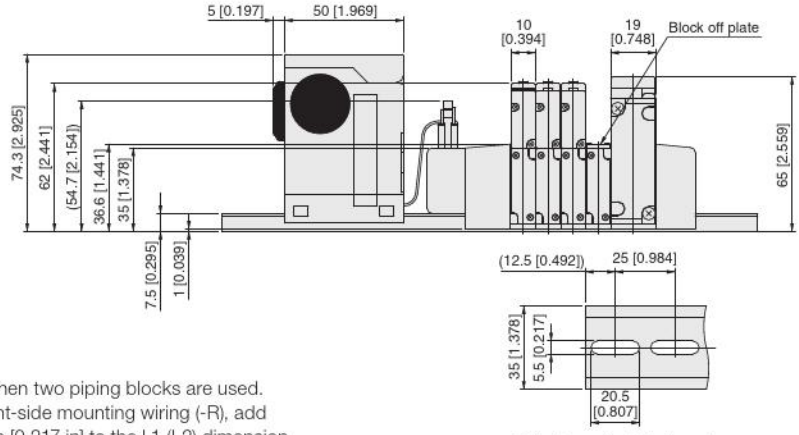

Unit dimensions

Number of units	L1	Length of DIN rail	L2 Note	Length of DIN rail Note
2	91.5 [3.602]	200 [7.874]	110.5 [4.350]	200 [7.874]
3	102.0 [4.016]	200 [7.874]	121.0 [4.764]	225 [8.858]
4	112.5 [4.429]	225 [8.858]	131.5 [5.177]	225 [8.858]
5	123.0 [4.843]	225 [8.858]	142.0 [5.591]	250 [9.843]
6	133.5 [5.256]	225 [8.858]	152.5 [6.004]	250 [9.843]
7	144.0 [5.669]	250 [9.843]	163.0 [6.417]	275 [10.827]
8	154.5 [6.083]	250 [9.843]	173.5 [6.831]	275 [10.827]
9	165.0 [6.496]	275 [10.827]	184.0 [7.244]	275 [10.827]
10	175.5 [6.909]	275 [10.827]	194.5 [7.657]	300 [11.811]
11	186.0 [7.323]	300 [11.811]	205.0 [8.071]	300 [11.811]
12	196.5 [7.736]	300 [11.811]	215.5 [8.484]	325 [12.795]
13	207.0 [8.150]	300 [11.811]	226.0 [8.898]	325 [12.795]
14	217.5 [8.563]	325 [12.795]	236.5 [9.311]	350 [13.780]
15	228.0 [8.976]	325 [12.795]	247.0 [9.724]	350 [13.780]
16	238.5 [9.390]	350 [13.780]	257.5 [10.138]	350 [13.780]

Note: When two piping blocks are used.
* For right-side mounting wiring (-R), add 5.5 mm [0.217 in] to the L1 (L2) dimension.

DIN rail mounting hole dimensions

F10M [Number of valves] SHL [Pilot specifications] (Base piping type)

With manifold outlet port female thread block

(Ether CAT)

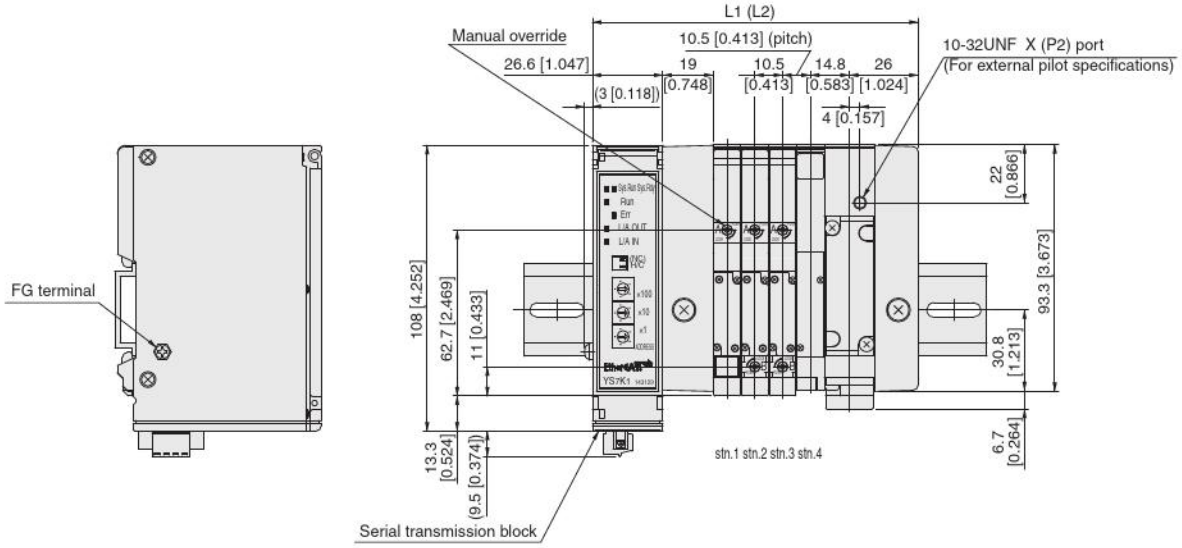

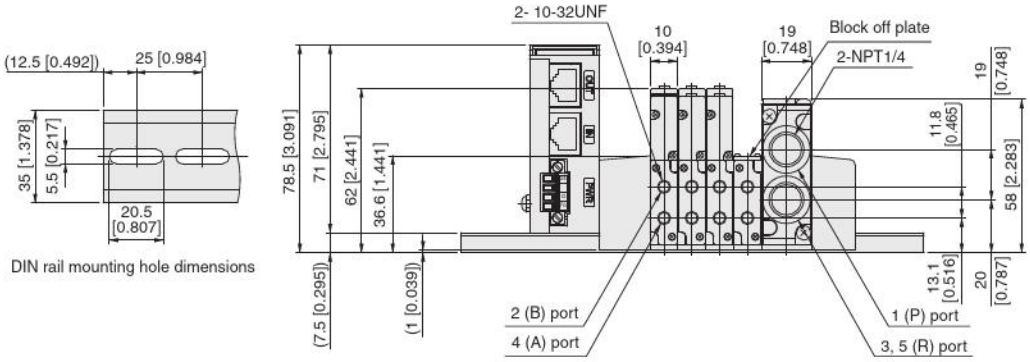

Unit dimensions

Number of units	L1	Length of DIN rail	L2 Note	Length of DIN rail Note
2	120.1 [4.728]	150 [5.906]	121.1 [4.768]	175 [6.890]
3	112.6 [4.433]	175 [6.890]	131.6 [5.181]	175 [6.890]
4	123.1 [4.846]	175 [6.890]	142.1 [5.594]	200 [7.874]
5	133.6 [5.260]	175 [6.890]	152.6 [6.008]	200 [7.874]
6	144.1 [5.673]	200 [7.874]	163.1 [6.421]	225 [8.858]
7	154.6 [6.087]	200 [7.874]	173.6 [6.835]	225 [8.858]
8	165.1 [6.500]	225 [8.858]	184.1 [7.248]	225 [8.858]
9	175.6 [6.913]	225 [8.858]	194.6 [7.661]	250 [9.843]
10	186.1 [7.327]	225 [8.858]	205.1 [8.075]	250 [9.843]
11	196.6 [7.740]	250 [9.843]	215.6 [8.488]	275 [10.827]
12	207.1 [8.154]	250 [9.843]	226.1 [8.902]	275 [10.827]
13	217.6 [8.567]	275 [10.827]	236.6 [9.315]	275 [10.827]
14	228.1 [8.980]	275 [10.827]	247.1 [9.728]	300 [11.811]
15	238.6 [9.394]	300 [11.811]	257.6 [10.142]	300 [11.811]
16	249.1 [9.807]	300 [11.811]	268.1 [10.555]	325 [12.795]
17	259.6 [10.220]	325 [12.795]	278.6 [10.969]	350 [13.780]
18	270.1 [10.634]	325 [12.795]	289.1 [11.382]	350 [13.780]
19	280.6 [11.047]	325 [12.795]	299.6 [11.795]	350 [13.780]
20	291.1 [11.461]	350 [13.780]	310.1 [12.209]	375 [14.764]

Note: When two piping blocks are used.
* For right-side mounting wiring (-R), add 5.5 mm [0.217 in] to the L1 (L2) dimension.

F10M Number of valves SH Pilot specifications (Direct piping type)

With valve outlet port female thread block

(Ether CAT)

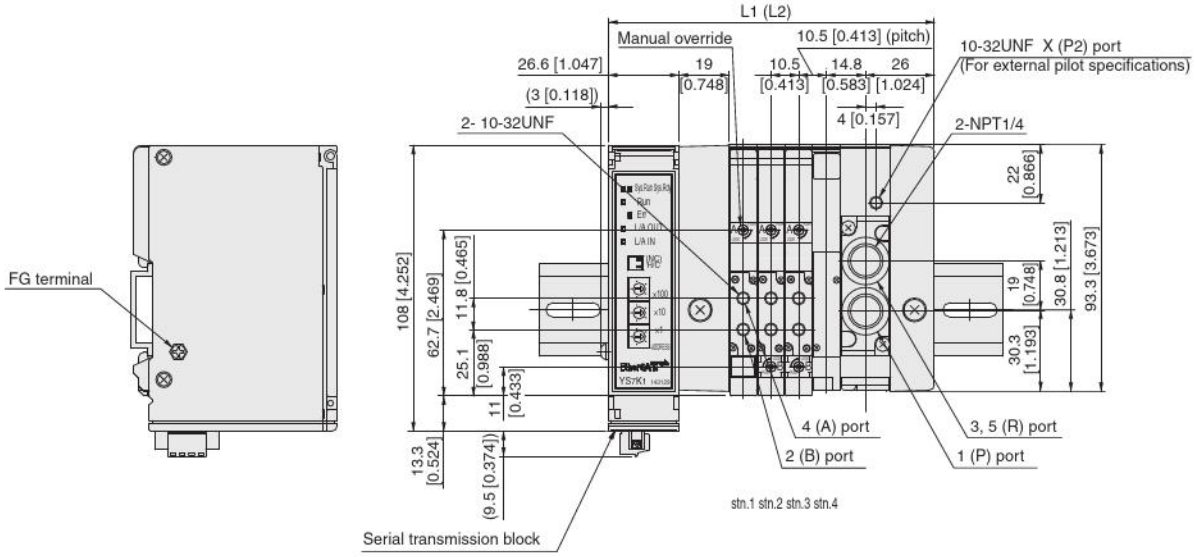

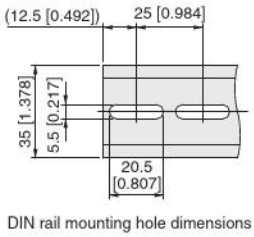

DIN rail mounting hole dimensions

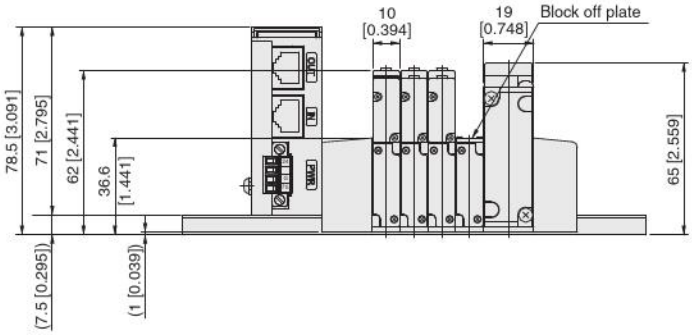

Unit dimensions

Number of units	L1	Length of DIN rail	L2 Note	Length of DIN rail Note
2	120.1 [4.728]	150 [5.906]	121.1 [4.768]	175 [6.890]
3	112.6 [4.433]	175 [6.890]	131.6 [5.181]	175 [6.890]
4	123.1 [4.846]	175 [6.890]	142.1 [5.594]	200 [7.874]
5	133.6 [5.260]	175 [6.890]	152.6 [6.008]	200 [7.874]
6	144.1 [5.673]	200 [7.874]	163.1 [6.421]	225 [8.858]
7	154.6 [6.087]	200 [7.874]	173.6 [6.835]	225 [8.858]
8	165.1 [6.500]	225 [8.858]	184.1 [7.248]	225 [8.858]
9	175.6 [6.913]	225 [8.858]	194.6 [7.661]	250 [9.843]
10	186.1 [7.327]	225 [8.858]	205.1 [8.075]	250 [9.843]
11	196.6 [7.740]	250 [9.843]	215.6 [8.488]	275 [10.827]
12	207.1 [8.154]	250 [9.843]	226.1 [8.902]	275 [10.827]
13	217.6 [8.567]	275 [10.827]	236.6 [9.315]	275 [10.827]
14	228.1 [8.980]	275 [10.827]	247.1 [9.728]	300 [11.811]
15	238.6 [9.394]	300 [11.811]	257.6 [10.142]	300 [11.811]
16	249.1 [9.807]	300 [11.811]	268.1 [10.555]	325 [12.795]
17	259.6 [10.220]	325 [12.795]	278.6 [10.969]	350 [13.780]
18	270.1 [10.634]	325 [12.795]	289.1 [11.382]	350 [13.780]
19	280.6 [11.047]	325 [12.795]	299.6 [11.795]	350 [13.780]
20	291.1 [11.461]	350 [13.780]	310.1 [12.209]	375 [14.764]

Note: When two piping blocks are used.
* For right-side mounting wiring (-R), add 5.5 mm [0.217 in] to the L1 (L2) dimension.

F10M Number of units XN J/M/L Pilot specifications - Piping block specification (Base piping type)

With manifold outlet port dual use fitting block
S type plug connector

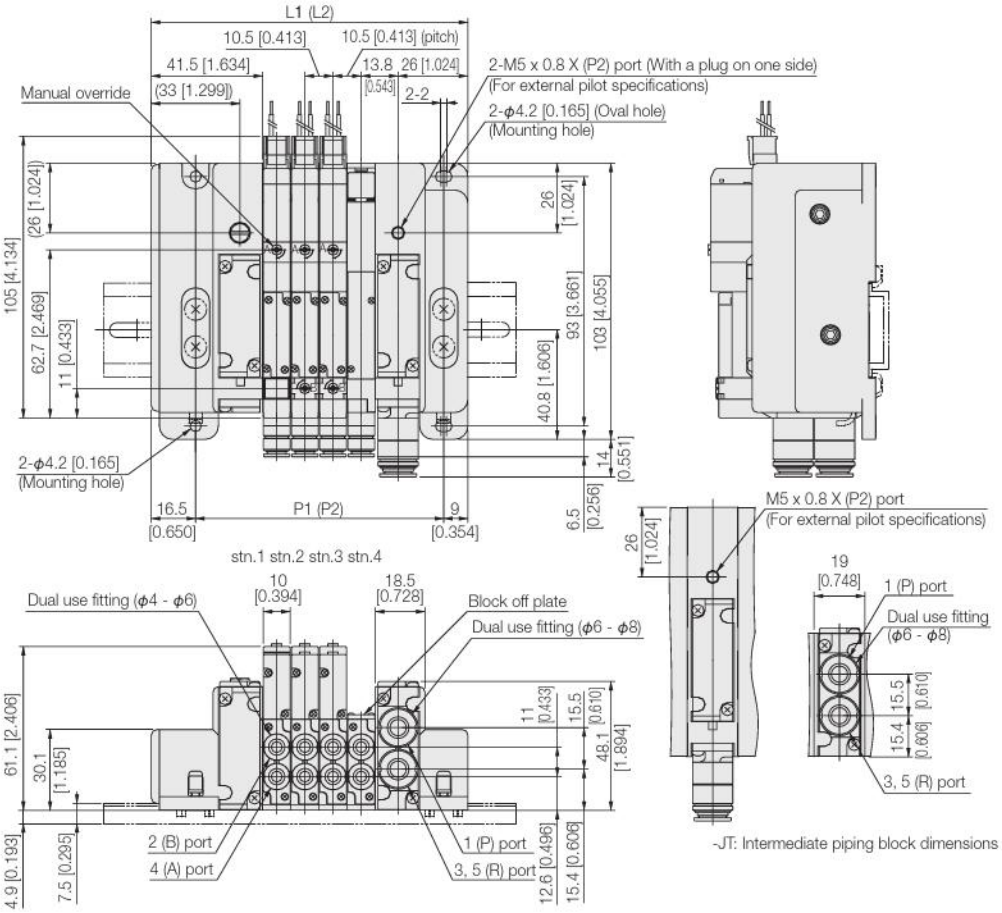

Unit dimensions

Number of units	L1	P1	Length of DIN rail	L2 Note	P2 Note	Length of DIN rail Note
2	97.0 [3.819]	71.5 [2.815]	150 [5.906]	-	-	-
3	107.5 [4.232]	82.0 [3.228]	150 [5.906]	126.5 [4.980]	101.0 [3.976]	175 [6.890]
4	118.0 [4.646]	92.5 [3.642]	175 [6.890]	137.0 [5.394]	111.5 [4.390]	175 [6.890]
5	128.5 [5.059]	103.0 [4.055]	175 [6.890]	147.5 [5.807]	122.0 [4.803]	175 [6.890]
6	139.0 [5.472]	113.5 [4.469]	175 [6.890]	158.0 [6.220]	132.5 [5.217]	200 [7.874]
7	149.5 [5.886]	124.0 [4.882]	200 [7.874]	168.5 [6.634]	143.0 [5.630]	200 [7.874]
8	160.0 [6.299]	134.5 [5.295]	200 [7.874]	179.0 [7.047]	153.5 [6.043]	225 [8.858]
9	170.5 [6.713]	145.0 [5.709]	225 [8.858]	189.5 [7.461]	164.0 [6.457]	225 [8.858]
10	181.0 [7.126]	155.5 [6.122]	225 [8.858]	200.0 [7.874]	174.5 [6.870]	225 [8.858]
11	191.5 [7.539]	166.0 [6.535]	250 [9.843]	210.5 [9.287]	185.0 [7.283]	250 [9.843]
12	202.0 [7.953]	176.5 [6.949]	250 [9.843]	221.0 [9.701]	195.5 [7.697]	250 [9.843]
13	212.5 [8.366]	187.0 [7.362]	250 [9.843]	231.5 [9.114]	206.0 [8.110]	275 [10.827]
14	223.0 [8.780]	197.5 [7.776]	275 [10.827]	242.0 [9.528]	216.5 [8.524]	275 [10.827]
15	233.5 [9.193]	208.0 [8.189]	275 [10.827]	252.5 [9.941]	227.0 [8.937]	300 [11.811]
16	244.0 [9.606]	218.5 [8.602]	300 [11.811]	263.0 [10.354]	237.5 [9.350]	300 [11.811]
17	254.5 [10.020]	229.0 [9.016]	300 [11.811]	273.5 [10.768]	248.0 [9.764]	300 [11.811]
18	265.0 [10.433]	239.5 [9.429]	325 [12.795]	284.0 [11.181]	258.5 [10.177]	325 [12.795]
19	275.5 [10.846]	250.0 [9.843]	325 [12.795]	294.5 [11.594]	269.0 [10.591]	325 [12.795]
20	286.0 [11.260]	260.5 [10.256]	325 [12.795]	305.0 [12.008]	279.5 [11.004]	350 [13.780]
21	-	-	-	315.5 [12.421]	290.0 [11.417]	350 [13.780]

Note:When the J□T or MT piping block specification is selected.

F10M Number of units XN Pilot specifications - Piping block specification (Direct piping type)

With manifold outlet port dual use fitting block
S type plug connector

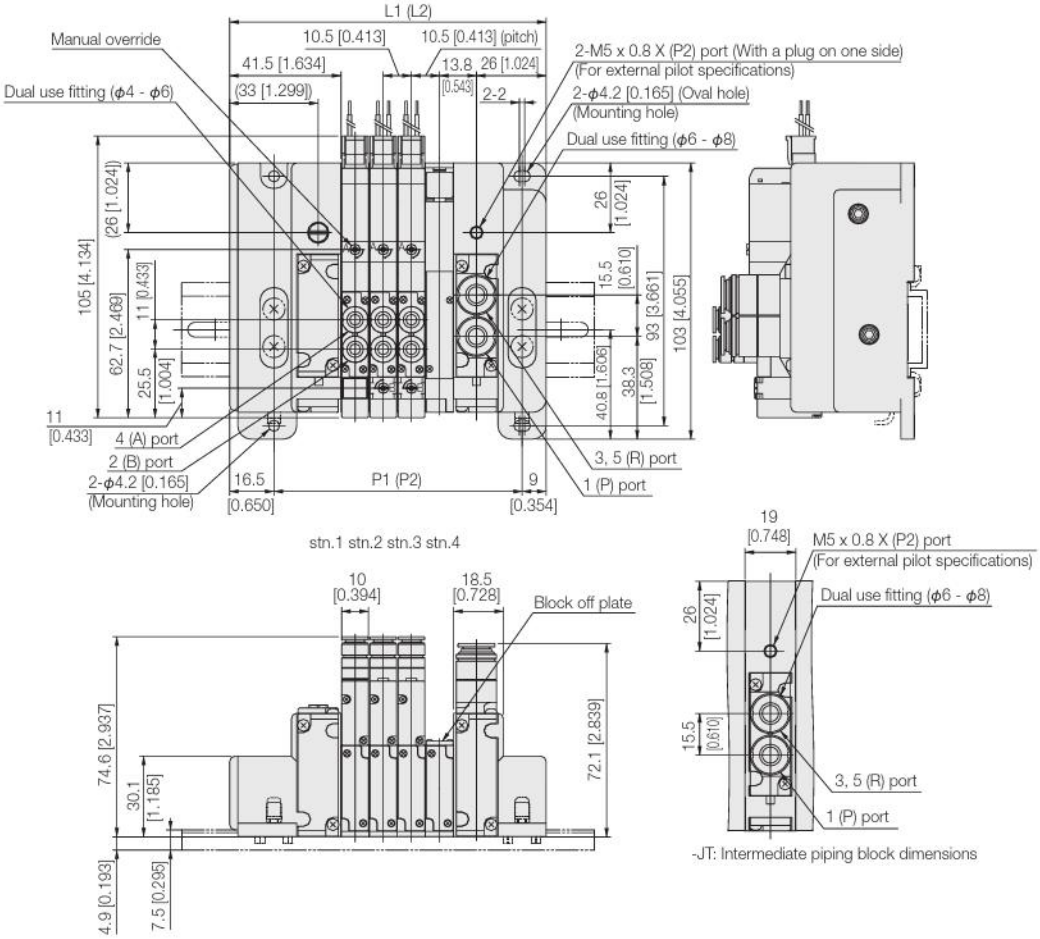

Unit dimensions

Number of units	L1	P1	Length of DIN rail	L2 Note	P2 Note	Length of DIN rail Note
2	97.0 [3.819]	71.5 [2.815]	150 [5.906]	-	-	-
3	107.5 [4.232]	82.0 [3.228]	150 [5.906]	126.5 [4.980]	101.0 [3.976]	175 [6.890]
4	118.0 [4.646]	92.5 [3.642]	175 [6.890]	137.0 [5.394]	111.5 [4.390]	175 [6.890]
5	128.5 [5.059]	103.0 [4.055]	175 [6.890]	147.5 [5.807]	122.0 [4.803]	175 [6.890]
6	139.0 [5.472]	113.5 [4.469]	175 [6.890]	158.0 [6.220]	132.5 [5.217]	200 [7.874]
7	149.5 [5.886]	124.0 [4.882]	200 [7.874]	168.5 [6.634]	143.0 [5.630]	200 [7.874]
8	160.0 [6.299]	134.5 [5.295]	200 [7.874]	179.0 [7.047]	153.5 [6.043]	225 [8.858]
9	170.5 [6.713]	145.0 [5.709]	225 [8.858]	189.5 [7.461]	164.0 [6.457]	225 [8.858]
10	181.0 [7.126]	155.5 [6.122]	225 [8.858]	200.0 [7.874]	174.5 [6.870]	225 [8.858]
11	191.5 [7.539]	166.0 [6.535]	250 [9.843]	210.5 [8.287]	185.0 [7.283]	250 [9.843]
12	202.0 [7.953]	176.5 [6.949]	250 [9.843]	221.0 [8.701]	195.5 [7.697]	250 [9.843]
13	212.5 [8.366]	187.0 [7.362]	250 [9.843]	231.5 [9.114]	206.0 [8.110]	275 [10.827]
14	223.0 [8.780]	197.5 [7.776]	275 [10.827]	242.0 [9.528]	216.5 [8.524]	275 [10.827]
15	233.5 [9.193]	208.0 [8.189]	275 [10.827]	252.5 [9.941]	227.0 [8.937]	300 [11.811]
16	244.0 [9.606]	218.5 [8.602]	300 [11.811]	263.0 [10.354]	237.5 [9.350]	300 [11.811]
17	254.5 [10.020]	229.0 [9.016]	300 [11.811]	273.5 [10.768]	248.0 [9.764]	300 [11.811]
18	265.0 [10.433]	239.5 [9.429]	325 [12.795]	284.0 [11.181]	258.5 [10.177]	325 [12.795]
19	275.5 [10.846]	250.0 [9.843]	325 [12.795]	294.5 [11.594]	269.0 [10.591]	325 [12.795]
20	286.0 [11.260]	260.5 [10.256]	325 [12.795]	305.0 [12.008]	279.5 [11.004]	350 [13.780]
21	-	-	-	315.5 [12.421]	290.0 [11.417]	350 [13.780]

Note:When the J□T or MT piping block specification is selected.

F10M [Number of units] XP J/M/L [Pilot specifications] (Base piping type)

With manifold outlet port dual use fitting block
Flat cable connector 10-pin specifications

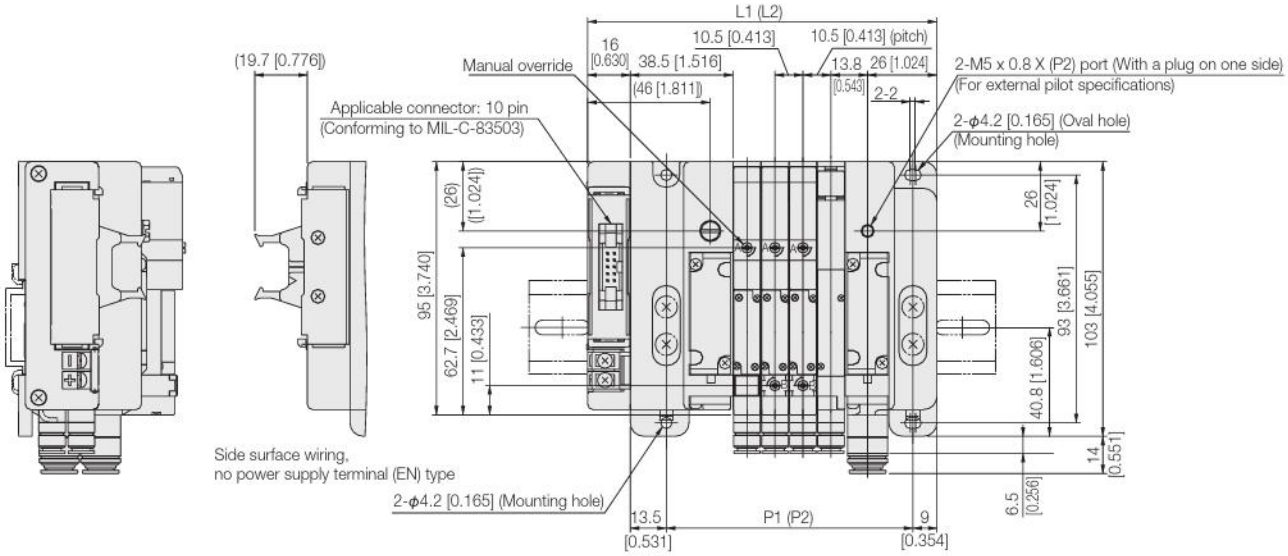

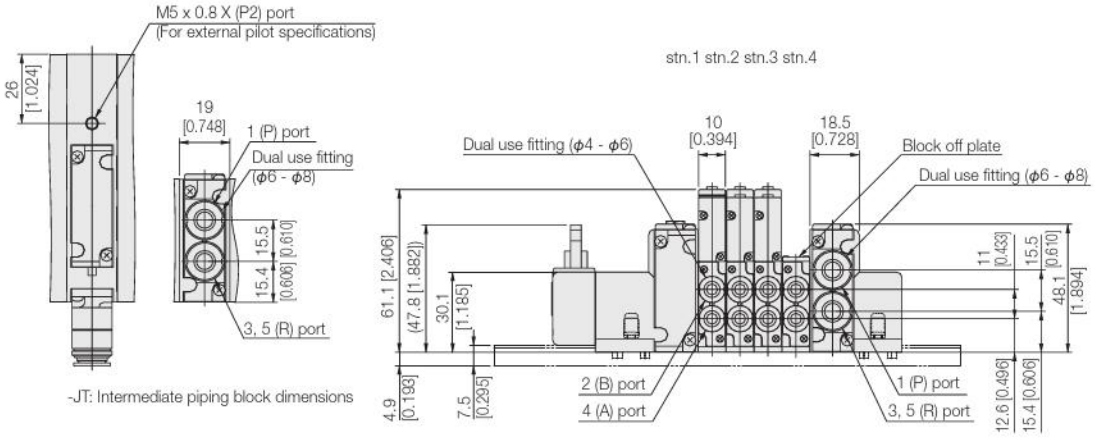

Unit dimensions

Number of units	L1	P1	Length of DIN rail	L2 Note	P2 Note	Length of DIN rail Note
2	110.0 [4.331]	71.5 [2.815]	150 [5.906]	-	-	-
3	120.5 [4.744]	82.0 [3.228]	175 [6.890]	139.5 [5.492]	101.0 [3.976]	175 [6.890]
4	131.0 [5.157]	92.5 [3.642]	175 [6.890]	150.0 [5.906]	111.5 [4.390]	175 [6.890]
5	141.5 [5.571]	103.0 [4.055]	200 [7.874]	160.5 [6.319]	122.0 [4.803]	200 [7.874]
6	152.0 [5.984]	113.5 [4.469]	200 [7.874]	171.0 [6.732]	132.5 [5.217]	200 [7.874]
7	162.5 [6.398]	124.0 [4.882]	200 [7.874]	181.5 [7.146]	143.0 [5.630]	225 [8.858]
8	173.0 [6.811]	134.5 [5.295]	225 [8.858]	192.0 [7.559]	153.5 [6.043]	225 [8.858]
9	-	-	-	202.5 [7.972]	164.0 [6.457]	250 [9.843]

Note:When the J□T or MT piping block specification is selected.

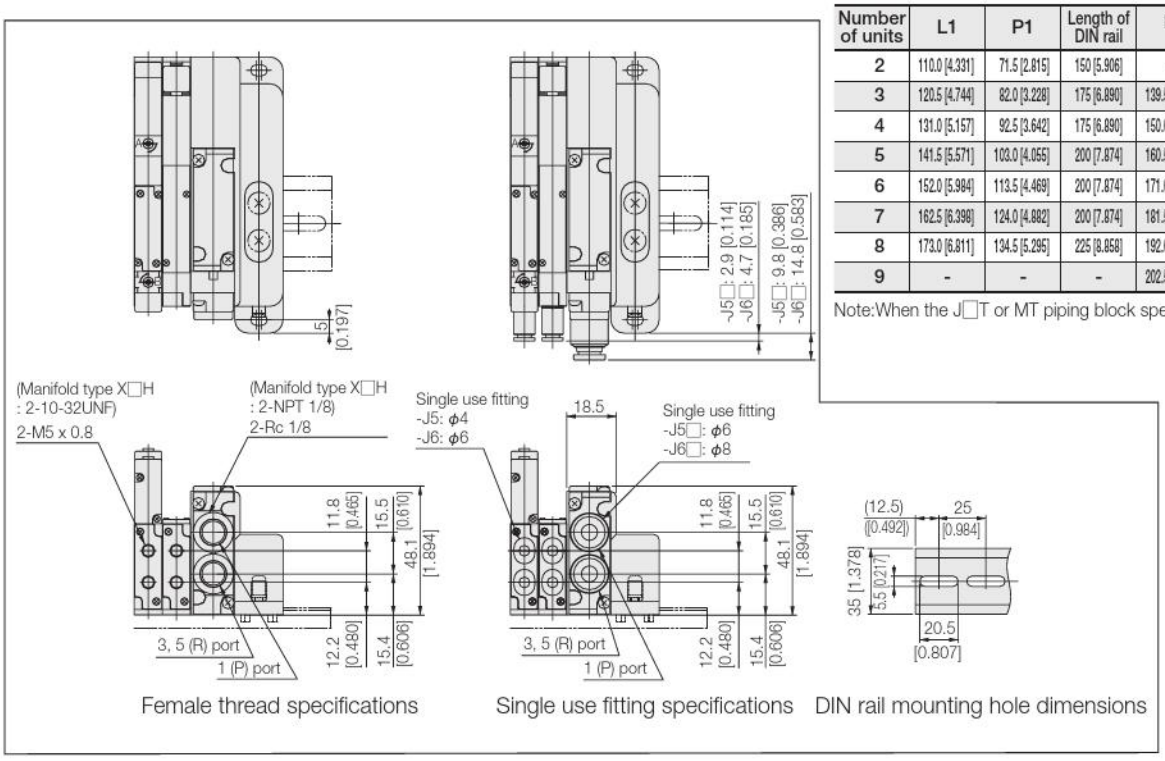

F10M Number of units XP J/M/L Pilot specifications (Base piping type)

With manifold outlet port dual use fitting block
Flat cable connector 20-pin specifications

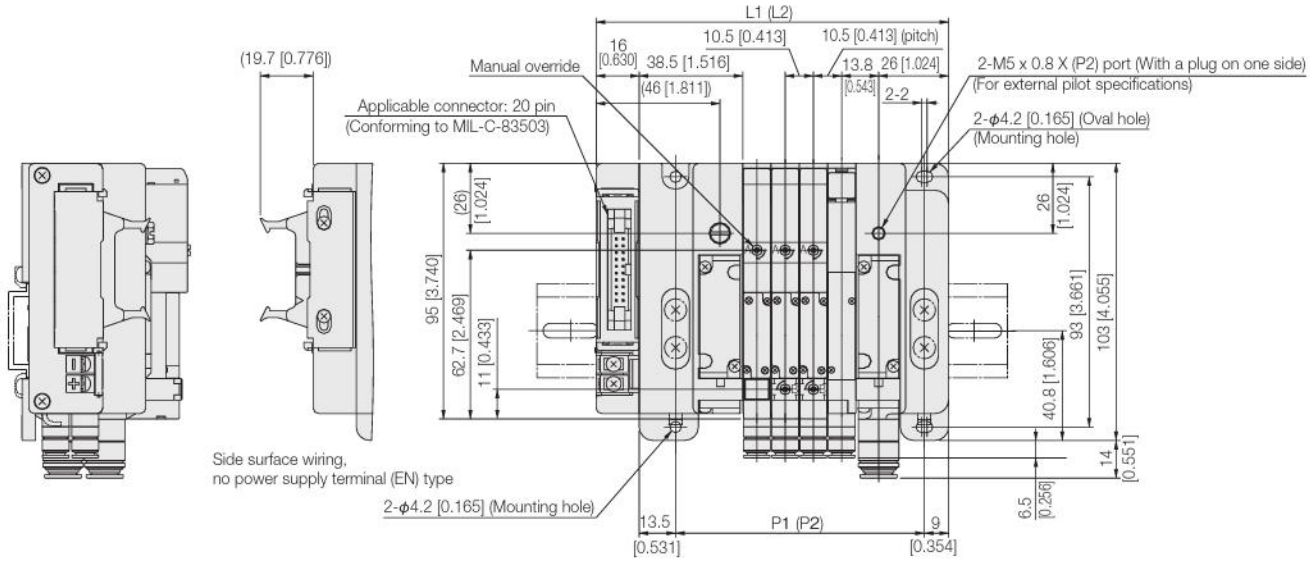

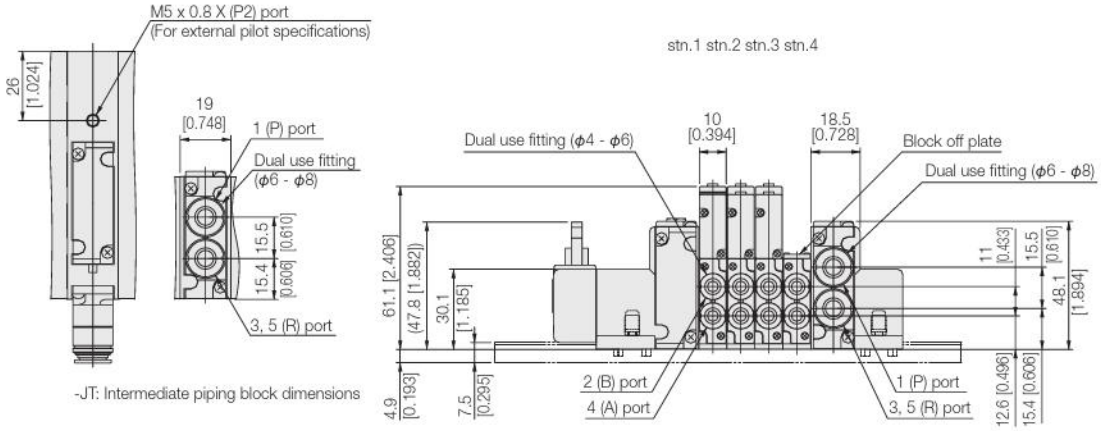

Unit dimensions

Number of units	L1	P1	Length of DIN rail	L2 Note	P2 Note	Length of DIN rail Note
2	110.0 [4.331]	71.5 [2.815]	150 [5.906]	-	-	-
3	120.5 [4.744]	82.0 [3.228]	175 [6.890]	139.5 [5.492]	101.0 [3.976]	175 [6.890]
4	131.0 [5.157]	92.5 [3.642]	175 [6.890]	150.0 [5.906]	111.5 [4.390]	175 [6.890]
5	141.5 [5.571]	103.0 [4.055]	200 [7.874]	160.5 [6.319]	122.0 [4.803]	200 [7.874]
6	152.0 [5.984]	113.5 [4.469]	200 [7.874]	171.0 [6.732]	132.5 [5.217]	200 [7.874]
7	162.5 [6.398]	124.0 [4.882]	200 [7.874]	181.5 [7.146]	143.0 [5.630]	225 [8.858]
8	173.0 [6.811]	134.5 [5.295]	225 [8.858]	192.0 [7.559]	153.5 [6.043]	225 [8.858]
9	183.5 [7.224]	145.0 [5.709]	225 [8.858]	202.5 [7.972]	164.0 [6.457]	250 [9.843]
10	194.0 [7.638]	155.5 [6.122]	250 [9.843]	213.0 [8.386]	174.5 [6.870]	250 [9.843]
11	204.5 [8.051]	166.0 [6.535]	250 [9.843]	223.5 [8.799]	185.0 [7.283]	250 [9.843]
12	215.0 [8.465]	176.5 [6.949]	275 [10.827]	234.0 [9.213]	195.5 [7.697]	275 [10.827]
13	225.5 [8.878]	187.0 [7.362]	275 [10.827]	244.5 [9.626]	206.0 [8.110]	275 [10.827]
14	236.0 [9.291]	197.5 [7.776]	275 [10.827]	255.0 [10.039]	216.5 [8.524]	300 [11.811]
15	246.5 [9.705]	208.0 [8.189]	300 [11.811]	265.5 [10.453]	227.0 [8.937]	300 [11.811]
16	257.0 [10.118]	218.5 [8.602]	300 [11.811]	276.0 [10.866]	237.5 [9.350]	325 [12.795]
17	-	-	-	286.5 [11.280]	248.0 [9.764]	325 [12.795]

Note:When the J□T or MT piping block specification is selected.

F10M [Number of units] XP J/M/L [Pilot specifications] (Base piping type)

With manifold outlet port dual use fitting block
Flat cable connector 26-pin specifications

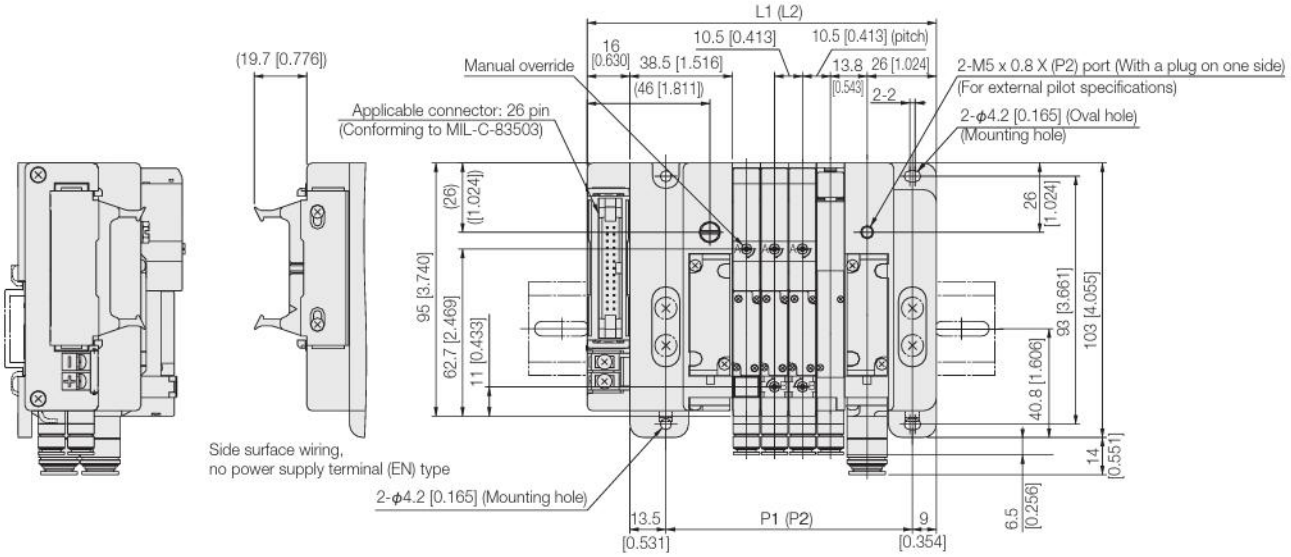

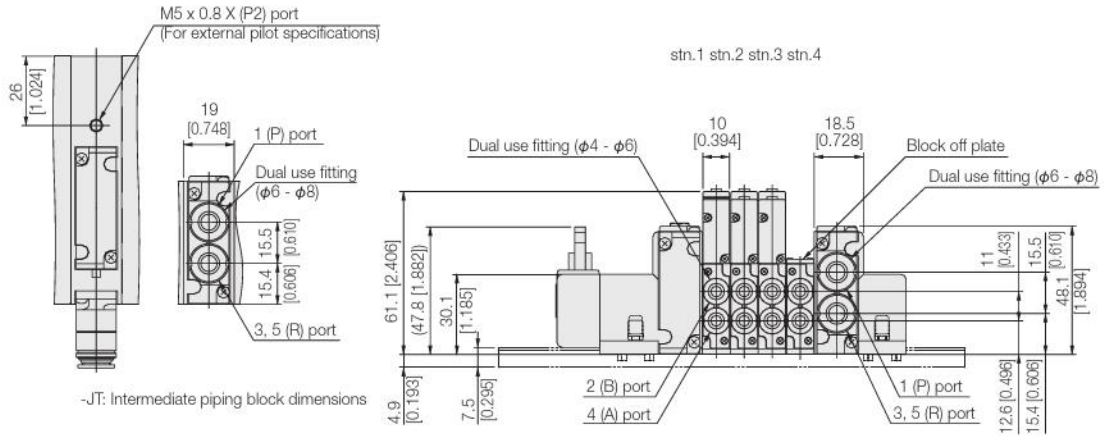

Unit dimensions

Number of units	L1	P1	Length of DIN rail	L2 Note	P2 Note	Length of DIN rail Note
2	110.0 [4.331]	71.5 [2.815]	150 [5.906]	-	-	-
3	120.5 [4.744]	82.0 [3.228]	175 [6.890]	139.5 [5.492]	101.0 [3.976]	175 [6.890]
4	131.0 [5.157]	92.5 [3.642]	175 [6.890]	150.0 [5.906]	111.5 [4.390]	175 [6.890]
5	141.5 [5.571]	103.0 [4.055]	200 [7.874]	160.5 [6.319]	122.0 [4.803]	200 [7.874]
6	152.0 [5.984]	113.5 [4.469]	200 [7.874]	171.0 [6.732]	132.5 [5.217]	200 [7.874]
7	162.5 [6.398]	124.0 [4.882]	200 [7.874]	181.5 [7.146]	143.0 [5.630]	225 [8.858]
8	173.0 [6.811]	134.5 [5.295]	225 [8.858]	192.0 [7.559]	153.5 [6.043]	225 [8.858]
9	183.5 [7.224]	145.0 [5.709]	225 [8.858]	202.5 [7.972]	164.0 [6.457]	250 [9.843]
10	194.0 [7.638]	155.5 [6.122]	250 [9.843]	213.0 [8.386]	174.5 [6.870]	250 [9.843]
11	204.5 [8.051]	166.0 [6.535]	250 [9.843]	223.5 [8.799]	185.0 [7.283]	250 [9.843]
12	215.0 [8.465]	176.5 [6.949]	275 [10.827]	234.0 [9.213]	195.5 [7.697]	275 [10.827]
13	225.5 [8.878]	187.0 [7.362]	275 [10.827]	244.5 [9.626]	206.0 [8.110]	275 [10.827]
14	236.0 [9.291]	197.5 [7.776]	275 [10.827]	255.0 [10.039]	216.5 [8.524]	300 [11.811]
15	246.5 [9.705]	208.0 [8.189]	300 [11.811]	265.5 [10.453]	227.0 [8.937]	300 [11.811]
16	257.0 [10.118]	218.5 [8.602]	300 [11.811]	276.0 [10.866]	237.5 [9.350]	325 [12.795]
17	267.5 [10.531]	229.0 [9.016]	325 [12.795]	286.5 [11.280]	248.0 [9.764]	325 [12.795]
18	278.0 [10.945]	239.5 [9.429]	325 [12.795]	297.0 [11.693]	258.5 [10.177]	325 [12.795]
19	288.5 [11.358]	250.0 [9.843]	325 [12.795]	307.5 [12.106]	269.0 [10.591]	350 [13.780]
20	299.0 [11.772]	260.5 [10.256]	350 [13.780]	318.0 [12.520]	279.5 [11.004]	350 [13.780]
21	-	-	-	328.5 [12.933]	290.0 [11.417]	375 [14.764]

Note:When the J□T or MT piping block specification is selected.

F10M Number of units XP J/M/L Pilot specifications (Base piping type)

With manifold outlet port dual use fitting block
D-sub connector 25-pin specifications

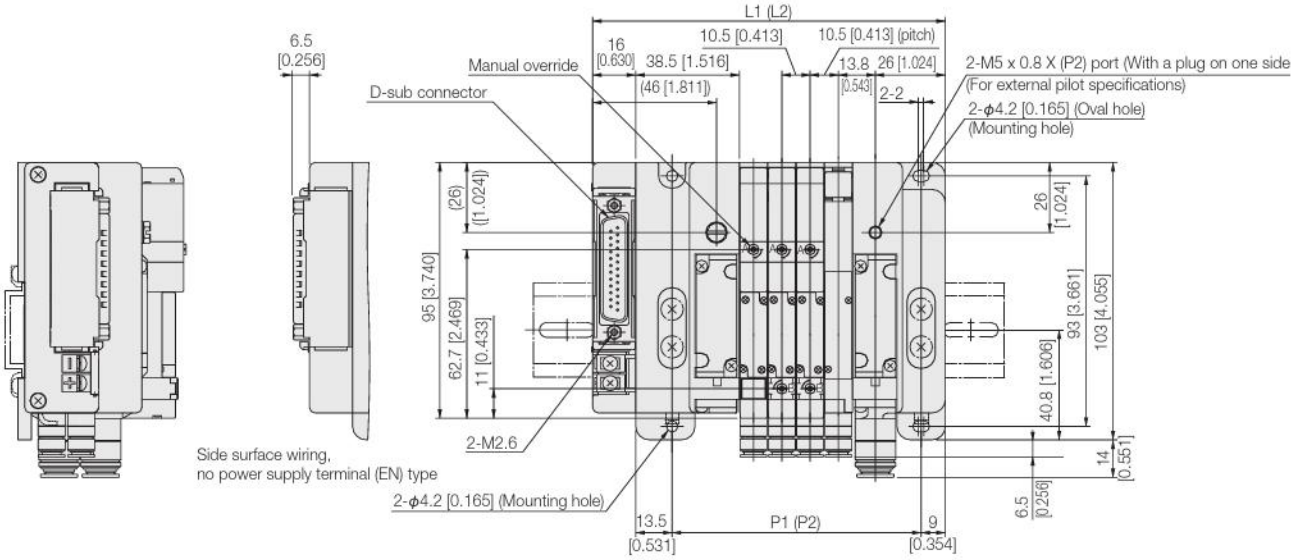

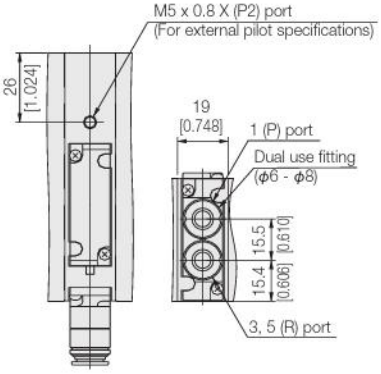

-JT: Intermediate piping block dimensions

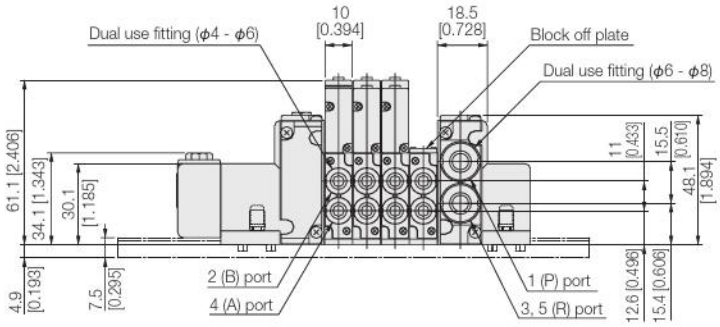

Unit dimensions

Number of units	L1	P1	Length of DIN rail	L2 Note	P2 Note	Length of DIN rail Note
2	110.0 [4.331]	71.5 [2.815]	150 [5.906]	-	-	-
3	120.5 [4.744]	82.0 [3.228]	175 [6.890]	139.5 [5.492]	101.0 [3.976]	175 [6.890]
4	131.0 [5.157]	92.5 [3.642]	175 [6.890]	150.0 [5.906]	111.5 [4.390]	175 [6.890]
5	141.5 [5.571]	103.0 [4.055]	200 [7.874]	160.5 [6.319]	122.0 [4.803]	200 [7.874]
6	152.0 [5.984]	113.5 [4.469]	200 [7.874]	171.0 [6.732]	132.5 [5.217]	200 [7.874]
7	162.5 [6.398]	124.0 [4.882]	200 [7.874]	181.5 [7.146]	143.0 [5.630]	225 [8.858]
8	173.0 [6.811]	134.5 [5.295]	225 [8.858]	192.0 [7.559]	153.5 [6.043]	225 [8.858]
9	183.5 [7.224]	145.0 [5.709]	225 [8.858]	202.5 [7.972]	164.0 [6.457]	250 [9.843]
10	194.0 [7.638]	155.5 [6.122]	250 [9.843]	213.0 [8.386]	174.5 [6.870]	250 [9.843]
11	204.5 [8.051]	166.0 [6.535]	250 [9.843]	223.5 [8.799]	185.0 [7.283]	250 [9.843]
12	215.0 [8.465]	176.5 [6.949]	275 [10.827]	234.0 [9.213]	195.5 [7.697]	275 [10.827]
13	225.5 [8.878]	187.0 [7.362]	275 [10.827]	244.5 [9.626]	206.0 [8.110]	275 [10.827]
14	236.0 [9.291]	197.5 [7.776]	275 [10.827]	255.0 [10.039]	216.5 [8.524]	300 [11.811]
15	246.5 [9.705]	208.0 [8.189]	300 [11.811]	265.5 [10.453]	227.0 [8.937]	300 [11.811]
16	257.0 [10.118]	218.5 [8.602]	300 [11.811]	276.0 [10.866]	237.5 [9.350]	325 [12.795]
17	267.5 [10.531]	229.0 [9.016]	325 [12.795]	286.5 [11.280]	248.0 [9.764]	325 [12.795]
18	278.0 [10.945]	239.5 [9.429]	325 [12.795]	297.0 [11.693]	258.5 [10.177]	325 [12.795]
19	288.5 [11.358]	250.0 [9.843]	325 [12.795]	307.5 [12.106]	269.0 [10.591]	350 [13.780]
20	299.0 [11.772]	260.5 [10.256]	350 [13.780]	318.0 [12.520]	279.5 [11.004]	350 [13.780]
21	-	-	-	328.5 [12.933]	290.0 [11.417]	375 [14.764]

Note:When the J□T or MT piping block specification is selected.

F10M Number of units XP J/M/L Pilot specifications (Base piping type)

With manifold outlet port dual use fitting block
Terminal block type

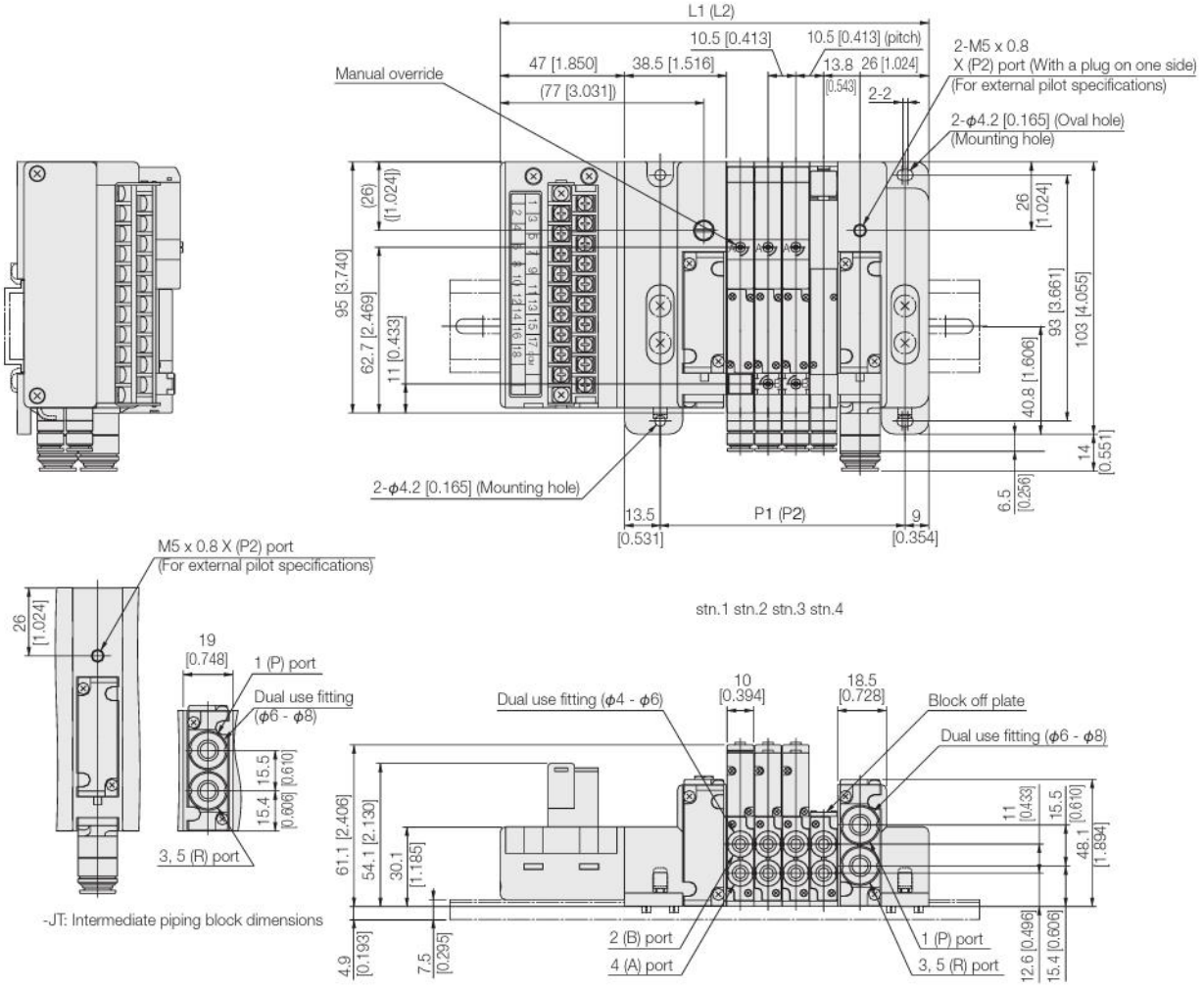

Unit dimensions

Number of units	L1	P1	Length of DIN rail	L2 Note	P2 Note	Length of DIN rail Note
2	141.0 [5.551]	71.5 [2.815]	200 [7.874]	-	-	-
3	151.5 [5.965]	82.0 [3.228]	200 [7.874]	170.5 [6.713]	101.0 [3.976]	200 [7.874]
4	162.0 [6.378]	92.5 [3.642]	200 [7.874]	181.0 [7.126]	111.5 [4.390]	225 [8.858]
5	172.5 [6.791]	103.0 [4.055]	225 [8.858]	191.5 [7.539]	122.0 [4.803]	225 [8.858]
6	183.0 [7.205]	113.5 [4.469]	225 [8.858]	202.0 [7.953]	132.5 [5.217]	250 [9.843]
7	193.5 [7.618]	124.0 [4.882]	250 [9.843]	212.5 [8.366]	143.0 [5.630]	250 [9.843]
8	204.0 [8.032]	134.5 [5.295]	250 [9.843]	223.0 [8.780]	153.5 [6.043]	250 [9.843]
9	214.5 [8.445]	145.0 [5.709]	250 [9.843]	233.5 [9.193]	164.0 [6.457]	275 [10.827]
10	225.0 [8.858]	155.5 [6.122]	275 [10.827]	244.0 [9.606]	174.5 [6.870]	275 [10.827]
11	235.5 [9.272]	166.0 [6.535]	275 [10.827]	254.5 [10.020]	185.0 [7.283]	300 [11.811]
12	246.0 [9.685]	176.5 [6.949]	300 [11.811]	265.5 [10.453]	195.5 [7.697]	300 [11.811]
13	256.5 [10.098]	187.0 [7.362]	300 [11.811]	275.5 [10.846]	206.0 [8.110]	325 [12.795]
14	267.0 [10.512]	197.5 [7.776]	325 [12.795]	286.0 [11.260]	216.5 [8.524]	325 [12.795]
15	277.5 [10.925]	208.0 [8.189]	325 [12.795]	296.5 [11.673]	227.0 [8.937]	325 [12.795]
16	288.0 [11.339]	218.5 [8.602]	325 [12.795]	307.0 [12.087]	237.5 [9.350]	350 [13.780]
17	298.5 [11.752]	229.0 [9.016]	350 [13.780]	317.5 [12.500]	248.0 [9.764]	350 [13.780]
18	309.0 [12.165]	239.5 [9.429]	350 [13.780]	328.0 [12.913]	258.5 [10.177]	375 [14.764]
19	-	-	-	338.5 [13.327]	269.0 [10.591]	375 [14.764]

Note:When the J□T or MT piping block specification is selected.

F10M [Number of units] XS J/M/L [Pilot specifications] (Base piping type)

With manifold outlet port dual use fitting block
(Stand alone serial transmission block compatible manifold) *The figure shows CC-Link.

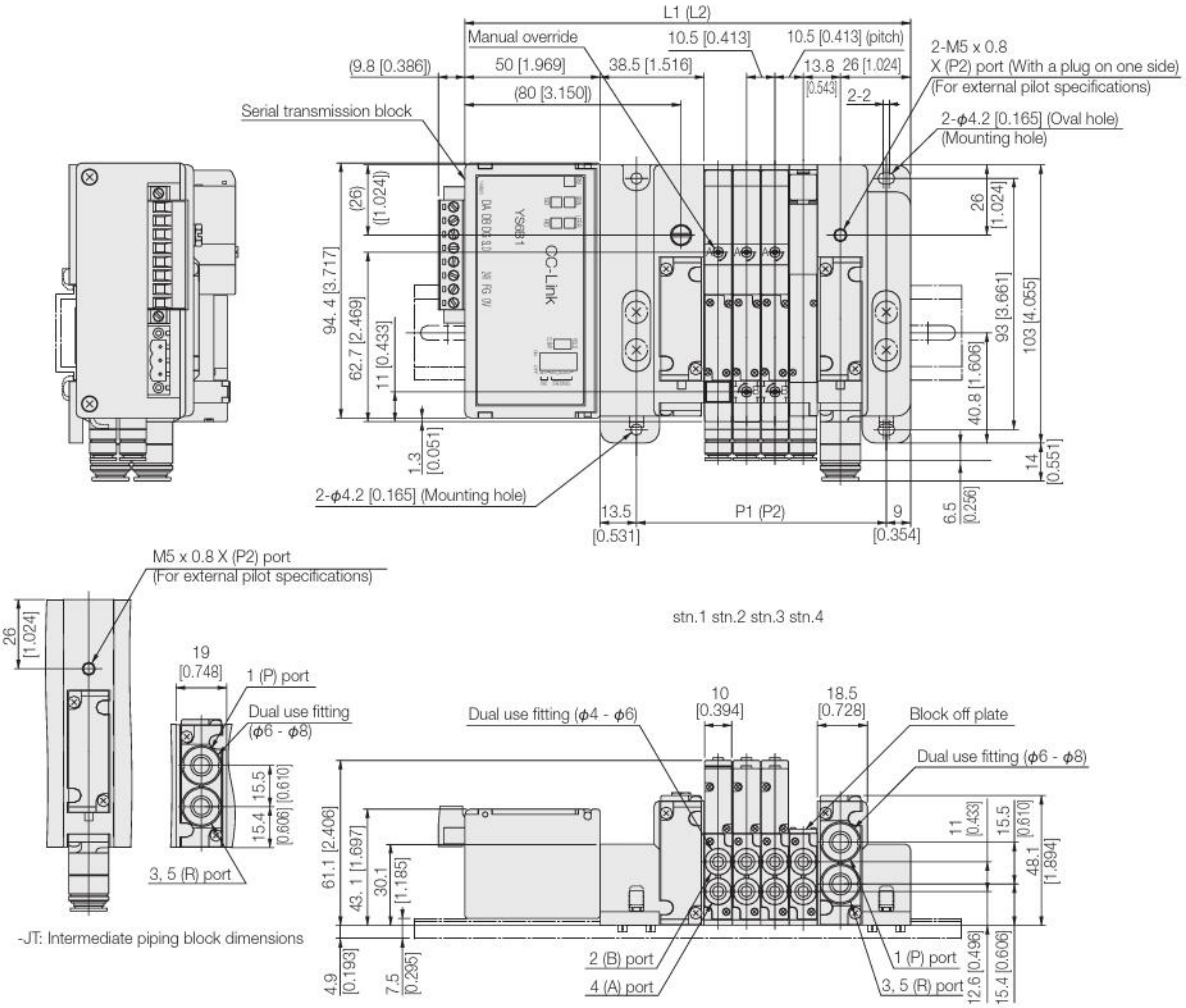

Unit dimensions

Number of units	L1	P1	Length of DIN rail	L2 Note	P2 Note	Length of DIN rail Note
2	144.0 [5.669]	71.5 [2.815]	200 [7.874]	-	-	-
3	154.5 [6.083]	82.0 [3.228]	200 [7.874]	173.5 [6.831]	101.0 [3.976]	200 [7.874]
4	165.0 [6.496]	92.5 [3.642]	225 [8.858]	184.0 [7.244]	111.5 [4.390]	225 [8.858]
5	175.5 [6.909]	103.5 [4.075]	225 [8.858]	194.5 [7.657]	122.0 [4.803]	225 [8.858]
6	186.0 [7.323]	113.5 [4.469]	225 [8.858]	205.0 [8.071]	132.5 [5.217]	250 [9.843]
7	196.5 [7.736]	124.0 [4.882]	250 [9.843]	215.5 [8.484]	143.0 [5.630]	250 [9.843]
8	207.0 [8.150]	134.5 [5.295]	250 [9.843]	226.0 [8.898]	153.5 [6.043]	275 [10.827]
9	217.5 [8.563]	145.0 [5.709]	275 [10.827]	236.5 [9.311]	164.0 [6.457]	275 [10.827]
10	228.0 [8.976]	155.5 [6.122]	275 [10.827]	247.0 [9.724]	174.5 [6.870]	275 [10.827]
11	238.5 [9.390]	166.0 [6.535]	275 [10.827]	257.5 [10.138]	185.0 [7.283]	300 [11.811]
12	249.0 [9.803]	176.5 [6.949]	300 [11.811]	268.0 [10.551]	195.5 [7.697]	300 [11.811]
13	259.5 [10.217]	187.0 [7.362]	300 [11.811]	278.5 [10.965]	206.0 [8.110]	325 [12.795]
14	270.0 [10.630]	197.5 [7.776]	325 [12.795]	289.0 [11.378]	216.5 [8.524]	325 [12.795]
15	280.5 [11.043]	208.0 [8.189]	325 [12.795]	299.5 [11.791]	227.0 [8.937]	325 [12.795]
16	291.0 [11.457]	218.5 [8.602]	350 [13.780]	310.0 [12.205]	237.5 [9.350]	350 [13.780]
17	301.5 [11.870]	229.0 [9.016]	350 [13.780]	320.5 [12.618]	248.0 [9.764]	350 [13.780]
18	312.0 [12.283]	239.5 [9.429]	350 [13.780]	331.0 [13.031]	258.5 [10.177]	375 [14.764]
19	322.5 [12.697]	250.0 [9.843]	375 [14.764]	341.5 [13.445]	269.0 [10.591]	375 [14.764]
20	333.0 [13.110]	260.5 [10.256]	375 [14.764]	352.0 [13.858]	279.5 [11.004]	400 [15.748]
21	-	-	-	362.5 [14.272]	290.0 [11.417]	400 [15.748]

Note:When the J□T or MT piping block specification is selected.

F10M [Number of units] XS J/M/L [Pilot specifications] (Base piping type)

With manifold outlet port dual use fitting block (EtherCAT/EtherNet/IP) *The figure shows EtherCAT.

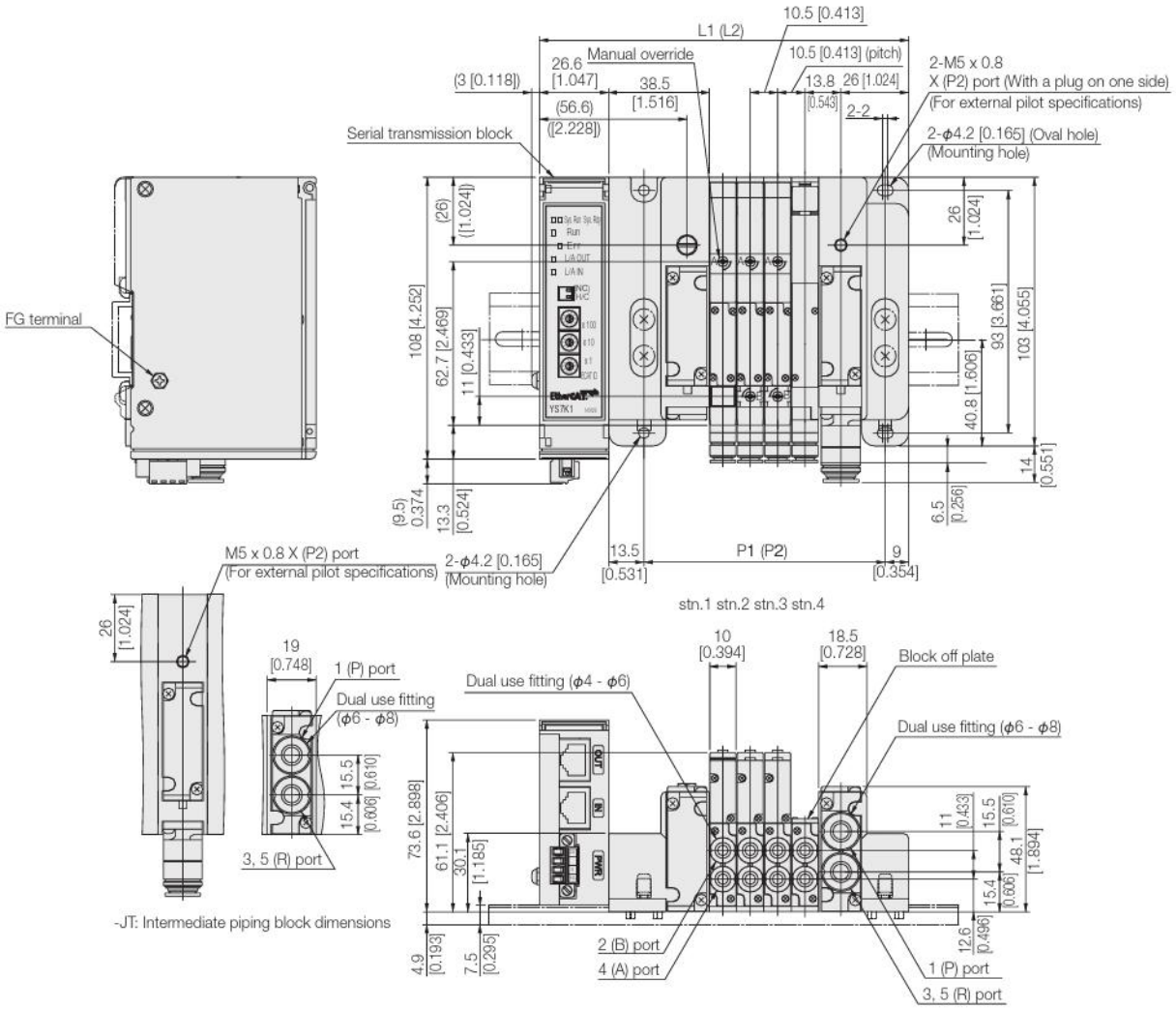

Unit dimensions

Number of units	L1	P1	Length of DIN rail	L2 Note	P2 Note	Length of DIN rail Note
2	120.6 [4.748]	71.5 [2.815]	175 [6.890]	-	-	-
3	131.1 [5.161]	82.0 [3.228]	175 [6.890]	150.1 [5.909]	101.0 [3.976]	200 [7.874]
4	141.6 [5.575]	92.5 [3.642]	200 [7.874]	160.6 [6.323]	111.5 [4.390]	200 [7.874]
5	152.1 [5.988]	103.0 [4.055]	200 [7.874]	171.1 [6.736]	122.0 [4.803]	200 [7.874]
6	162.6 [6.402]	113.5 [4.469]	200 [7.874]	181.6 [7.150]	132.5 [5.217]	225 [8.858]
7	173.1 [6.815]	124.0 [4.882]	225 [8.858]	192.1 [7.563]	143.0 [5.630]	225 [8.858]
8	183.6 [7.228]	134.5 [5.295]	225 [8.858]	202.6 [7.976]	153.5 [6.043]	250 [9.843]
9	194.1 [7.642]	145.0 [5.709]	250 [9.843]	213.1 [8.390]	164.0 [6.457]	250 [9.843]
10	204.6 [8.055]	155.5 [6.122]	250 [9.843]	223.6 [8.803]	174.5 [6.870]	250 [9.843]
11	215.1 [8.469]	166.0 [6.535]	275 [10.827]	234.1 [9.217]	185.0 [7.283]	275 [10.827]
12	225.6 [8.882]	176.5 [6.949]	275 [10.827]	244.6 [9.630]	195.5 [7.697]	275 [10.827]
13	236.1 [9.295]	187.0 [7.362]	275 [10.827]	255.1 [10.043]	206.0 [8.110]	300 [11.811]
14	246.6 [9.709]	197.5 [7.776]	300 [11.811]	265.6 [10.457]	216.5 [8.524]	300 [11.811]
15	257.1 [10.122]	208.0 [8.189]	300 [11.811]	276.1 [10.870]	227.0 [8.937]	325 [12.795]
16	267.6 [10.535]	218.5 [8.602]	325 [12.795]	286.6 [11.283]	237.5 [9.350]	325 [12.795]
17	278.1 [10.949]	229.0 [9.016]	325 [12.795]	297.1 [11.697]	248.0 [9.764]	325 [12.795]
18	288.6 [11.362]	239.5 [9.429]	325 [12.795]	307.6 [12.110]	258.5 [10.177]	350 [13.780]
19	299.1 [11.776]	250.0 [9.843]	350 [13.780]	318.1 [12.524]	269.0 [10.591]	350 [13.780]
20	309.6 [12.189]	260.5 [10.256]	350 [13.780]	328.6 [12.937]	279.5 [11.004]	375 [14.764]
21	-	-	-	339.1 [13.350]	290.0 [11.417]	375 [14.764]

Note:When the J□T or MT piping block specification is selected.

Additional Parts (available separately)

●Muffler: **KM-J8** [for both plug-in and non-plug-in]

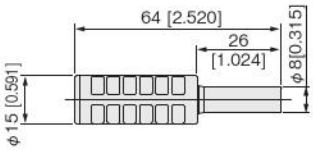

●Muffler: **KM-J6**

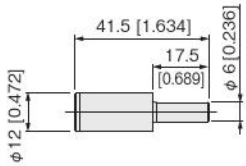

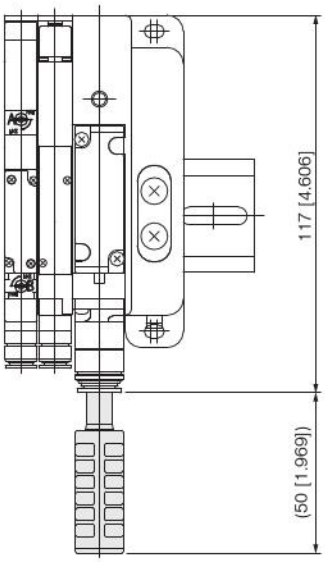

SOLENOID VALVES
F15 SERIES

Contents

Specifications — 156

ORDER CODES
- Single Valve Unit — 162
- Monoblock Manifold A Type (Base Piping Type) — 166
- Monoblock Manifold F Type (Direct Piping Type) — 170
- Monoblock Manifold A Type, Wire-saving Type (Base Piping Type) — 174
- Monoblock Manifold F Type, Wire-saving Type (Direct Piping Type) — 176
- PC Board Manifold A Type (Base Piping Type) — 178
- PC Board Manifold F Type (Direct Piping Type) — 182
- Split Manifold Non-plug-in Type — 184
- Split Manifold Plug-in Type — 190
- Split Manifold Serial Transmission Type — 194
- Easy Assembly Type Manifold Non-plug-in Type — 198
- Easy Assembly Type Manifold Plug-in Type — 204
- Easy Assembly Type Manifold Serial Transmission Type — 210

DIMENSIONS
- Single Valve Unit — 216
- Monoblock Manifold — 219
- Monoblock Manifold, Wire-saving Type — 222
- PC Board Manifold — 224
- Split Manifold Non-plug-in Type — 225
- Split Manifold Plug-in Type — 227
- Split Manifold Serial Transmission Type — 236
- Easy Assembly Type Manifold Non-plug-in Type — 242
- Easy Assembly Type Manifold Plug-in Type — 244
- Easy Assembly Type Manifold Serial Transmission Type — 249

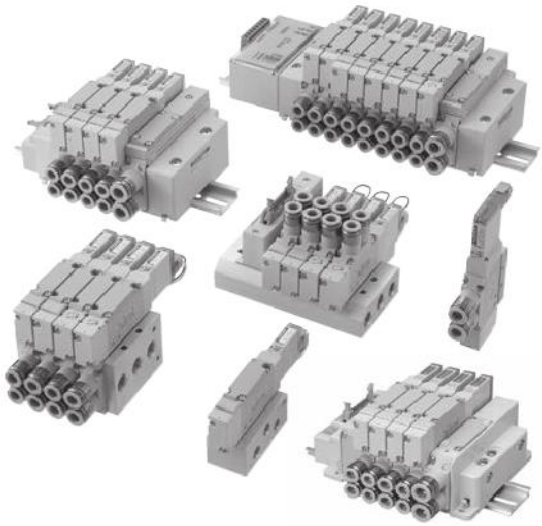

F15 SERIES Specifications

Specifications

Basic Models and Valve Functions

Item \ Basic model	F15□T0	F15□T1 F15□T2	F15□T3 F15□T4 F15□T5	F15□TA F15□TB F15□TC
Number of positions	2 positions		3 positions	4 positions
Number of ports	5			Tandem 3-port
Valve function	Single solenoid only	Both single and double solenoid use	Closed center, Exhaust center, Pressure center	NC/NC, NO/NO, NC/NO

Remark: For the optional specifications and order codes, see p.162.

Specifications

Item \ Basic model		F15□T0 F15□T1 F15□T2	F15□T3 F15□T4 F15□T5	F15□TA F15□TB F15□TC	F15□T0G F15□T1G F15□T2G	F15□T3G F15□T4G F15□T5G	F15□T0V F15□T1V F15□T2V	F15□T3V
Media		Air						
Operation type		Internal pilot type			External pilot type (for positive pressure)		External pilot type (for vacuum)	
Flow rate characteristics	Sonic conductance C $dm^3/(s \cdot bar)$ Note1	2.05	2.05	1.60	2.05	2.05	2.05	2.05
	Effective area Note2 mm^2 (Cv)	10.3 (0.57)	10.3 (0.57)	8 (0.44)	10.3 (0.57)	10.3 (0.57)	10.3 (0.57)	10.3 (0.57)
Port size Note3		Dual use fitting for ϕ6 and ϕ8, Rc1/8, NPT1/8			M5×0.8,10-32UNF, dual use fitting for ϕ6 and ϕ8, Rc1/8, NTP1/8			
Lubrication		Not required						
Operating pressure range	Main valve	0.15~0.7 MPa [22~102 psi.]			0~0.7 MPa [0~102 psi.] Note4		– 100 kPa~0.15 MPa [– 29.53 in.Hg~22 psi.]	
	External pilot	——			0.2~0.7 MPa [29~102 psi.] Note4		0.2~0.7 MPa [29~102 psi.]	
Proof pressure	MPa [psi.]	1.05 [152]						
Response time Note5 ON/OFF ms	12VDC, 24VDC	20/25 (30) or below	15/45 (50) or below	20/30 (35) or below	20/25 (30) or below	15/45 (50) or below	20/25 (30) or below	15/45 (50) or below
	100VAC	20/25 or below	15/45 or below	——	20/25 or below	15/45 or below	20/25 or below	15/45 or below
Maximum operating frequency	Hz	5						
Minimum time to energize for self holding Note6	ms	50	——		50	——	50	——
Operating temperature range (atmosphere and media)	°C [°F]	5~50 [41~122]						
Shock resistance	m/s^2 [G]	294.2 [30] (245 [25]) Figure in parentheses is for when mounted on the split manifold.						
Mounting direction		Any						

Notes: 1. For details, see the flow rate characteristics on p.157.
2. The effective area is a calculated value, and not a measured value.
3. For details, see the port size on p.157.
4. When the main valve pressure is 0.2~0.7 MPa [29~102 psi.], set the external pilot pressure to the main valve pressure or higher, and to 0.7 MPa [102 psi.] or less.
5. Values when air pressure is 0.5 MPa [73 psi.]. For switching phase timing in the AC specification, add a maximum of 5 ms to the response time. The values for 2-position valves are those when used as a single solenoid, and the values for 3-position valves are those when switching from the neutral position of closed center. Values in parentheses ( ) are for low-current type.
6. When used as a double solenoid valve. Excludes **T0**.

Remark: Specification values are based on Koganei test standards.

Solenoid Specifications

Item \ Rated voltage			12VDC	24VDC (Standard type)	24VDC (Low-current type)	100VAC		120VAC	
Voltage range		V	10.8~13.2 (12±10%)	21.6~26.4 (24±10%)	21.6~26.4 (24±10%)	90~110 (100±10%)		108~132 (120±10%)	
Rated frequency		Hz	—	—	—	50	60	50	60
Standard	Current (when rated voltage is applied)	mA (r.m.s)	33	17	—	8		8.3	
Standard	Power consumption	W	0.4	0.4	—	0.8 VA		1 VA	
Low-current type	Current (when rated voltage is applied)	Starting mA	—	—	17	—		—	
Low-current type		Holding mA			4.2				
Low-current type	Power consumption	Starting W	—	—	0.4	—		—	
Low-current type		Holding W			0.1				
Low-current type	Starting time (standard)	ms	—	—	70	—		—	
Allowable leakage current		mA	2.0	1.0	1.0	1.0		1.0	
Type of insulation			Type B						
Insulation resistance Note 1		MΩ	Over 100						
Color of LED indicator Note2			14(SA) : Red, 12(SB) : Green						
Surge suppression (as standard)			Surge absorption transistor		Flywheel diode	Bridge diode			

Notes: 1. Value at 500VDC megger.
2. The color of the **T0** indicator is red only.

Remark: Specification values are based on Koganei test standards.

Cylinder operating speed

How to obtain cylinder speed

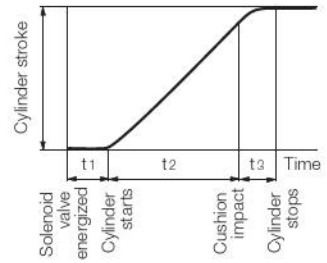

Measuring conditions

- Air pressure: 0.5 MPa [73 psi.]
- Piping (outer diameter x inner diameter x length): ϕ8 x ϕ6 x 1000 mm [39 in.]
- Fitting: Quick fitting TS8-01
- Load ratio = $\frac{\text{Load}}{\text{Cylinder theoretical thrust}}$ (%)
- Cylinder stroke: 150 mm [5.91 in.]

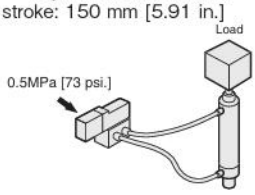

Maximum operating speed

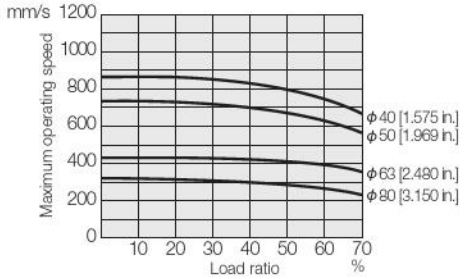

Delay time

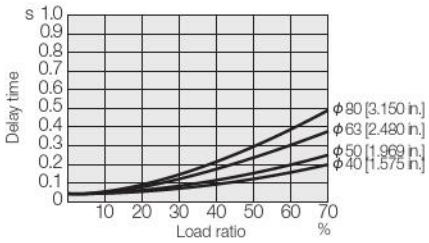

Note: Delay time may vary according to the cylinder stroke.

Flow rate

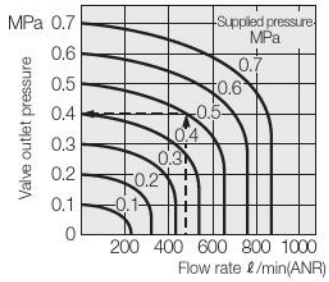

How to read the graph

When the supply pressure is 0.5 MPa [73 psi.] and flow rate is 500R/min [17.7 ft.3/min.] (ANR), the valve outlet pressure becomes 0.4 MPa [58 psi.].

1 mm/s = 0.0394 in./sec.
1 MPa = 145 psi.
1 ℓ/min = 0.0353 ft.^{3}/min.

Port Size

	Description/Piping specification	PR	X (P2)	4 (A), 2 (B)	1 (P), 3 (R2), 5 (R1), 3, 5 (R)
	With sub-base	M5×0.8, 10-32UNF	M5×0.8, 10-32UNF	Rc1/8, NPT1/8	Rc1/8, NPT1/8
Single unit	With female thread block	–	–	Rc1/8, NPT1/8	Rc1/8, NPT1/8
Single unit	With dual use fitting block	–	–	Dual use fitting for ϕ6 and ϕ8	Rc1/8, NPT1/8
Single unit	With single use fitting block	–	–	ϕ6 or ϕ8	Rc1/8, NPT1/8
Manifold	Monoblock type with female thread block, and PC board type with female thread block	M5×0.8, 10-32UNF	M5×0.8, 10-32UNF	Rc1/8, NPT1/8	Rc1/4, NPT1/4
Manifold	Monoblock type with fitting block, and PC board type with fitting block	M5×0.8, 10-32UNF	M5×0.8, 10-32UNF	Dual use fitting for ϕ6 and ϕ8	Rc1/4, NPT1/4
Manifold	Monoblock type with single use fitting block, and PC board type with single use fitting block	M5×0.8, 10-32UNF	M5×0.8, 10-32UNF	ϕ6 or ϕ8	Rc1/4, NPT1/4
Manifold	Split type with female thread block, and serial transmission type with female thread block	–	M5×0.8, 10-32UNF	Rc1/8, NPT1/8	Rc1/4, NPT1/4
Manifold	Split type with fitting block, and serial transmission type with fitting block	–	M5×0.8, 10-32UNF	Dual use fitting for ϕ6 and ϕ8	Dual use fitting for ϕ8 and ϕ10
Manifold	Split type with single use fitting block, and serial transmission type with single use fitting block	–	M5×0.8, 10-32UNF	ϕ6 or ϕ8	Single use fitting for ϕ8 or ϕ10
Manifold	Easy assembly type with female thread block, and serial transmission type with female thread block	–	M5×0.8, 10-32UNF	Rc1/8, NPT1/8	Rc1/4, NPT1/4
Manifold	Easy assembly type with fitting block, and serial transmission type with fitting block	–	M5×0.8, 10-32UNF	Dual use fitting for ϕ6 and ϕ8	Dual use fitting for ϕ8 and ϕ10
Manifold	Easy assembly type with single use fitting block, and serial transmission type with single use fitting block	–	M5×0.8, 10-32UNF	ϕ6 or ϕ8	Single use fitting for ϕ8 or ϕ10

Specifications for DIN Connector (-39□) Type

Specifications

Remark: Specification values are the same as the Standard type, excluding the response time. See page 156.

Item \ Basic model	F15T0 F15T2	F15T3 F15T4 F15T5	F15T0G F15T2G	F15T3G F15T4G F15T5G	F15T0V F15T2V	F15T3V
Response time Note **ON/OFF** ms	20/30 or below	15/50 or below	20/30 or below	15/50 or below	20/30 or below	15/50 or below

Note: Values when air pressure is 0.5 MPa [73 psi.]. For switching phase timing in the AC specification, add a maximum of 5 ms to the response time. The values for 2-position valves are those when used as a single solenoid, and the values for 3-position valves are those when switching from the neutral position of closed center.

Solenoid Specifications for DIN Connector (-39□) Type

Item \ Rated voltage			12VDC	24VDC	120VAC		240VAC	
Voltage range		V	10.8~13.2 (12±10%)	21.6~26.4 (24±10%)	90~132		180~264	
Current	Frequency	Hz	—	—	50	60	50	60
Current	Starting	mA (r.m.s)	—	—	43	38	22	19
Current	Holding	mA (r.m.s)	140 (1.7W)	75 (1.8W)	29	24	14	12
Allowable leakage current		mA	8	4	4		2	
Insulation resistance Note		MΩ	Over 100					
Surge suppression (as standard)			Surge absorption transistor		Varistor		Varistor	

Note: Value at 500VDC megger.

Remark: Specification values are based on Koganei test standards.

Flow Rate Characteristics

● When used as a single unit

Basic model	1(P)→2(B)/1(P)→4(A)		2(B)→3(R2)/4(A)→5(R1)	
	Sonic conductance C dm³/(s·bar)	Critical pressure ratio b	Sonic conductance C dm³/(s·bar)	Critical pressure ratio b
F15□T0-A2 F15□T1-A2 F15□T2-A2	1.76	0.25	1.72	0.26
F15□T3-A2 F15□T4-A2 F15□T5-A2	1.78	0.25	1.72	0.24
F15□TA-A2 F15□TB-A2 F15□TC-A2	1.53	0.26	1.61	0.23
F15□T0-F3 F15□T1-F3 F15□T2-F3	1.80	0.25	1.71	0.29
F15□T3-F3 F15□T4-F3 F15□T5-F3	1.81	0.23	1.61	0.27
F15□TA-F3 F15□TB-F3 F15□TC-F3	1.57	0.28	1.57	0.24
F15□T0-F4 F15□T1-F4 F15□T2-F4	1.83	0.30	1.62	0.33
F15□T3-F4 F15□T4-F4 F15□T5-F4	1.57	0.36	1.51	0.25
F15□TA-F4 F15□TB-F4 F15□TC-F4	1.54	0.31	1.55	0.27

Basic model	1(P)→2(B)/1(P)→4(A)		2(B)→3(R2)/4(A)→5(R1)	
	Sonic conductance C dm³/(s·bar)	Critical pressure ratio b	Sonic conductance C dm³/(s·bar)	Critical pressure ratio b
F15□T0-F5 F15□T1-F5 F15□T2-F5	1.62	0.38	1.56	0.28
F15□T3-F5 F15□T4-F5 F15□T5-F5	1.57	0.36	1.51	0.25
F15□TA-F5 F15□TB-F5 F15□TC-F5	1.44	0.34	1.46	0.24
F15□T0-F6 F15□T1-F6 F15□T2-F6	1.86	0.30	1.70	0.30
F15□T3-F6 F15□T4-F6 F15□T5-F6	1.84	0.29	1.64	0.29
F15□TA-F6 F15□TB-F6 F15□TC-F6	1.58	0.31	1.57	0.31

● When mounted on a manifold

Valve model \ Manifold model		Monoblock manifold F type F15M□F (FP)		Monoblock manifold A type F15M□A (AP)		Split manifold F15M□N (P) (S)		Easy assembly type manifold F15M□XN (P) (S)	
		1(P)→2(B)/1(P)→4(A)	2(B)→3(R2)/4(A)→5(R1)	1(P)→2(B)/1(P)→4(A)	2(B)→3(R2)/4(A)→5(R1)	1(P)→2(B)/1(P)→4(A)	2(B)→3(R2)/4(A)→5(R1)	1(P)→2(B)/1(P)→4(A)	2(B)→3(R2)/4(A)→5(R1)
		Sonic conductance C dm³/(s/bar)		Sonic conductance C dm³/(s/bar)		Sonic conductance C dm³/(s/bar)		Sonic conductance C dm³/(s/bar)	
F15□T0□ F15□T1□ F15□T2□	Outlet port dual use fitting for φ6 and φ8 ※These are the cases of φ8.	1.72	1.56	1.56	1.46	2.01	1.84	2.00	1.90
F15□T3□ F15□T4□ F15□T5□		1.72	1.53	1.57	1.43	2.02	1.78	2.14	1.79
F15□TA□ F15□TB□ F15□TC□		1.48	1.47	1.38	1.34	1.57	1.61	1.46	1.56
F15□T0□ F15□T1□ F15□T2□	Outlet port φ6 fitting	1.50	1.46	1.38	1.39	1.67	1.70	1.77	1.71
F15□T3□ F15□T4□ F15□T5□		1.52	1.46	1.39	1.37	1.67	1.66	1.77	1.69
F15□TA□ F15□TB□ F15□TC□		1.37	1.39	1.28	1.30	1.41	1.50	1.39	1.44
F15□T0□ F15□T1□ F15□T2□	Outlet port φ8 fitting	1.73	1.56	1.60	1.47	2.05	1.83	1.98	1.92
F15□T3□ F15□T4□ F15□T5□		1.72	1.54	1.60	1.45	2.05	1.78	2.11	1.68
F15□TA□ F15□TB□ F15□TC□		1.49	1.48	1.39	1.36	1.58	1.60	1.47	1.55

Notes: 1. When the individual air supply spacer or the individual air exhaust spacer, the back pressure prevention valve, or the stop valve is used, sonic conductance decreases by about 30%.
2: For the flow rate characteristics of other outlet ports, consult us.

Remark: Specification values are based on Koganei test standards.

Mass

Single Valve Unit Mass

g [oz.]

F15□T□□	F15□T□□-A1	F15□T□□-A2	F15□T□□-FJ	F15□T□□-FJ5	F15□T□□-FJ6
Outlet portion None	Outlet portion With plate	Outlet portion With plate	Outlet portion With dual use fitting block	Outlet portion With ϕ6 fitting block	Outlet portion With ϕ8 fitting block
Inlet portion None	Inlet portion None	Inlet portion With A type sub-base	Inlet portion None	Inlet portion None	Inlet portion None
82 [2.89]	101 [3.56]	210 [7.41]	114 [4.02]	125 [4.41]	130 [4.59]

g [oz.]

F15□T□□-FM	F15□T□□-F3	F15□T□□-F4	F15□T□□-F5	F15□T□□-F6
Outlet portion With female thread block	Outlet portion With dual use fitting block	Outlet portion With female thread block	Outlet portion With ϕ6 fitting block	Outlet portion With ϕ8 fitting block
Inlet portion None	Inlet portion With female thread block	Inlet portion With female thread block	Inlet portion With female thread block	Inlet portion With female thread block
104 [3.67]	127 [4.48]	117 [4.13]	138 [4.87]	143 [5.04]

Basic Type **F15T0** is 13 g [0.46 oz.] less than the mass shown above.

Monoblock Manifold Mass (single valve unit included)

g [oz.]

Monoblock manifold	Mass calculation of each unit			
	4(A), 2(B) ports outlet specifications			
	Female thread block	Dual use fitting block	ϕ6 fitting block	ϕ8 fitting block
A type	(230×n)+128 [(8.11×n)+4.51]	(240×n)+128 [(8.47×n)+4.51]	(251×n)+128 [(8.85×n)+4.51]	(256×n)+128 [(9.03×n)+4.51]
F type	(156×n)+116 [(5.50×n)+4.09]	(166×n)+116 [(5.86×n)+4.09]	(177×n)+116 [(6.24×n)+4.09]	(182×n)+116 [(6.42×n)+4.09]

g [oz.]

Monoblock manifold	Additional mass (wire-saving type)		
	Wiring specification		
	-F100N, -F101N	**-F200N, -F201N, -F260N**	**-D250N, -D251N**
A type	340+4n [11.99+0.14n]	342+4n [12.06+0.14n]	346+4n [12.20+0.14n]
F type	192+4n [6.77+0.14n]	194+4n [6.84+0.14n]	198+4n [6.98+0.14n]

Calculation example : **F15M8AM**
stn.1～stn.8 F15T1-A1-PS DC24V
(230×8)+128=1968 g [69.42 oz.]
When mounting the block-off plate, subtract 100 g [3.53 oz] per unit from the above calculation result.
When mounting the **F15□T0** specification valve, subtract 13 g [0.46 oz.] per unit from the above calculation result.

PC Board Manifold Mass (single valve unit included)

g [oz.]

PC board manifold	Mass calculation of each unit				
	4(A), 2(B) ports outlet specifications				Circuit board and connector portion
	Female thread block	Dual use fitting block	ϕ6 fitting block	ϕ8 fitting block	
A type	(230×n)+128 [(8.11×n)+4.51]	(240×n)+128 [(8.47×n)+4.51]	(251×n)+128 [(8.85×n)+4.51]	(256×n)+128 [(9.03×n)+4.51]	(2×n)+29 [(0.07×n)+1.02]
F type	(162×n)+121 [(5.71×n)+4.27]	(172×n)+121 [(6.07×n)+4.27]	(183×n)+121 [(6.46×n)+4.27]	(188×n)+121 [(6.63×n)+4.27]	

Calculation example : **F15M8APM-F201-W**
stn.1～stn.8 F15T1-A1-PP DC24V
(230×8)+128+(2×8)+29=2013 g [71.01 oz.]
When mounting the block-off plate, subtract 100 g [3.53 oz] per unit from the above calculation result.
When mounting the **F15□T0** specification valve, subtract 13 g [0.46 oz.] per unit from the above calculation result.

Optional Parts Mass

Stop valve (-STP): 50 g [1.76 oz.]

Mass of Split Manifold and Serial Transmission Compatible Manifold

Because the valve and manifold have the same output specifications, their mass is the same. The mass can only be changed by choosing a different type of inlet/outlet block.

Mass of Split Manifold Non-Plug-in Type (single valve unit included)

g [oz.]

	Mass calculation of each unit			
	4(A), 2(B) ports outlet specifications			
Non-plug-in type	Female thread block	Dual use fitting block	φ6 fitting block	φ8 fitting block
	(173×n)+249 [(6.10×n)+8.78]	(183×n)+249 [(6.46×n)+8.78]	(194×n)+249 [(6.84×n)+8.78]	(199×n)+249 [(7.02×n)+8.78]

g [oz.]

Additional mass			
Piping block specification			
Female thread block	Dual use fitting block	φ8 fitting block	φ10 fitting block
153 [5.40]	167 [5.89]	191 [6.74]	201 [7.09]

Calculation example : **F15M8N-MR**
stn.1～stn.8 F15T1-A1-PS DC24V
(173×8)+249+153=1786 g [63.00 oz.]
When mounting the block-off plate, subtract 100 g [3.53 oz] per unit from the above calculation result.
When mounting the **F15□T0** specification valve, subtract 13 g [0.46 oz.] per unit from the above calculation result.

Mass of Split Manifold Plug-in Type/ Serial Transmission Type (single valve unit included)

g [oz.]

	Mass calculation of each unit			
	4(A), 2(B) ports outlet specifications			
Plug-in type Serial transmission compatible manifold	Female thread block	Dual use fitting block	φ6 fitting block	φ8 fitting block
	(177×n)+249 [(6.24×n)+8.78]	(187×n)+249 [(6.60×n)+8.78]	(198×n)+249 [(6.98×n)+8.78]	(203×n)+249 [(7.16×n)+8.78]

g [oz.]

Additional mass			
Piping block specification			
Female thread block	Dual use fitting block	φ8 fitting block	φ10 fitting block
153 [5.40]	167 [5.89]	191 [6.74]	201 [7.09]

g [oz.]

Additional mass				
Wiring block specification				
-F100□□, -F101□□	**-F200□□, -F201□□, -F260□□**	**-D250□□, -D251□□**	**-D370NU**	**-T200**
32 [1.13]	34 [1.20]	39 [1.38]	72 [2.54]	158 [5.57]

g [oz.]

Additional mass			
Serial transmission block specification			
Stand-alone type	Integrated type	Integrated type (For EtherCAT)	Integrated type (For EtherNet/IP)
231 [8.15]	138 [4.87]	100 [3.53]	110 [3.88]

Calculation example : **F15M8PM-MR-F201 DC24V**
stn.1～stn.8 F15T1-A1 DC24V
(177×8)+249+153+34=1852 g [65.33 oz.]
When mounting the block-off plate, subtract 100 g [3.53 oz] per unit from the above calculation result.
When mounting the **F15□T0** specification valve, subtract 13 g [0.46 oz.] per unit from the above calculation result.

Mass of Easy Assembly Type Manifold and Serial Transmission Type Manifold

Mass of Easy Assembly Type Manifold Non-Plug-in Type (single valve unit included)

g [oz.]

Mounting type	Mass calculation of each unit			
	Outlet port specifications			
	Female thread block	Dual use fitting block	ϕ6 fitting block	ϕ8 fitting block
No code	(186 x n) + 309 [(6.56×n) + 10.90]	(196 x n) + 309 [(6.91×n) + 10.90]	(207 x n) + 309 [(7.30×n) + 10.90]	(212 x n) + 309 [(7.48×n) + 10.90]
-DN	(186 x n) + 371 [(6.56×n) + 13.09]	(196 x n) + 371 [(6.91×n) + 13.09]	(207 x n) + 371 [(7.30×n) + 13.09]	(212 x n) + 371 [(7.48×n) + 13.09]
-DR	(189 x n) + 387 [(6.67×n) + 13.65]	(199 x n) + 387 [(7.02×n) + 13.65]	(210 x n) + 387 [(7.41×n) + 13.65]	(215 x n) + 387 [(7.58×n) + 13.65]

g [oz.]

Fitting specifications	Additional mass			
	Intake/exhaust outlet			
	Female thread block	Dual use fitting block	ϕ8 fitting block	ϕ10 fitting block
J□ M□	34 [1.20]	48 [1.70]	72 [2.54]	82 [2.90]
J□D MD□	44 [1.55]	72 [2.54]	120 [4.23]	140 [4.94]
J□T MT□	-25 [-0.88]	17 [0.60]	89 [3.14]	119 [4.20]

Calculation example: **F15M8XNJ-JR-DR DC24V**

stn.1 ～ 8 F15T1-A1-PS DC24V

(199 x 8) + 387 + 48 = 2027 g [71.50 oz.]

When mounting the block-off plate, subtract 100 g [3.53 oz.] per unit from the above calculation result.

When mounting the F15□T0 specification valve, subtract 13g [0.46 oz.] per unit from the above calculation result.

Mass of Easy Assembly Type Manifold Plug-in Type/Serial Transmission Type (single valve unit included)

g [oz.]

Mounting type	Mass calculation of each unit			
	Outlet port specifications			
	Female thread block	Dual use fitting block	ϕ6 fitting block	ϕ8 fitting block
No code	(189 x n) + 306 [(6.67×n) + 10.80]	(199 x n) + 306 [(7.02×n) + 10.80]	(210 x n) + 306 [(7.41×n) + 10.80]	(215 x n) + 306 [(7.58×n) + 10.80]
-DN	(189 x n) + 369 [(6.67×n) + 13.01]	(199 x n) + 369 [(7.02×n) + 13.01]	(210 x n) + 369 [(7.41×n) + 13.01]	(215 x n) + 369 [(7.58×n) + 13.01]
-DR	(192 x n) + 391 [(6.77×n) + 13.79]	(201 x n) + 391 [(7.09×n) + 13.79]	(213 x n) + 391 [(7.51×n) + 13.79]	(218 x n) + 391 [(7.69×n) + 13.79]

g [oz.]

Fitting specifications	Additional mass			
	Intake/exhaust outlet			
	Female thread block	Dual use fitting block	ϕ8 fitting block	ϕ10 fitting block
J□ M□	34 [1.20]	48 [1.70]	72 [2.54]	82 [2.90]
J□D MD□	44 [1.55]	72 [2.54]	120 [4.23]	140 [4.94]
J□T MT□	-27 [-0.95]	15 [0.53]	87 [3.07]	117 [4.13]

g [oz.]

Additional mass			
Wiring block specifications			
-F100□□, -F101□□	**-F200□□, -F201□□, -F260□□**	**-D250□□, -D251□□**	**-T200**
36 [1.27]	38 [1.34]	43 [1.52]	116 [4.09]

g [oz.]

Additional mass		
Serial transmission block specifications (Monoblock)		
For CC-Link, DeviceNet, and CompoNet	For EtherCAT	For EtherNet/IP
138 [4.87]	100 [3.53]	110 [3.88]

Calculation example: **F15M8XPJ-JR-F201-DR DC24V**

stn.1 ～ 8 F15T1-A1 DC24V

(201 x 8) + 391 + 48 + 38 = 2085 g [73.55 oz.]

When mounting the block-off plate, subtract 100g [3.53 oz.] per unit from the above calculation result.

When mounting the F10□T0 specification valve, subtract 13g [0.46 oz.] per unit from the above calculation result.

F15 Series Single Valve Unit Order Codes

Valve size

F15
15mm [0.591 in.] width
Standard type

F15L
15mm [0.591 in.] width
Low-current type

Valve outlet type

Without inlet/ outlet block

With A type outlet plate

With A type sub-base

-A2 inlet/outlet port
F15: Rc1/8
-A2H inlet/outlet port
F15: NPT1/8

With outlet port dual use fitting block

Outlet port fitting
F15: ϕ6, ϕ8

With outlet port single use fitting block

Outlet port fitting
F15: ϕ6

With outlet port single use fitting block

Outlet port fitting
F15: ϕ8

With outlet port female thread block

-FM outlet port
F15: Rc1/8
-FMH outlet port
F15: NPT1/8

With outlet port dual use fitting block
With inlet port
female thread block Note6

Outlet port fitting
F15: ϕ6, ϕ8

With outlet port
female thread block
With inlet port
female thread block Note6

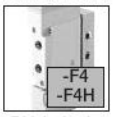

-F4 inlet/outlet port
F15: Rc1/8
-F4H inlet/outlet port
F15: NPT1/8

With outlet port
single use fitting block
With inlet port
female thread block Note6

Outlet port fitting
F15: ϕ6

With outlet port
single use fitting block
With inlet port
female thread block Note6

Outlet port fitting
F15: ϕ8

3-port normally closed (NC) Note5
With outlet port
single use fitting block

Outlet port fitting
F15: ϕ6

3-port normally open (NO) Note5
With outlet port
single use fitting block

Outlet port fitting
F15: ϕ6

3-port normally closed (NC) Note5
With outlet port
single use fitting block

Outlet port fitting
F15: ϕ8

3-port normally open (NO) Note5
With outlet port
single use fitting block

Outlet port fitting
F15: ϕ8

3-port normally closed (NC) Note5
With outlet port
female thread block

-FMA outlet port
F15: Rc1/8
-FMAH outlet port
F15: NPT1/8

3-port normally open (NO) Note5
With outlet port
female thread block

-FMB outlet port
F15: Rc1/8
-FMBH outlet port
F15: NPT1/8

3-port normally closed (NC) Note5
With outlet port
female thread block
With inlet port
female thread block Note6

-F4A inlet/outlet port
F15: Rc1/8
-F4AH inlet/outlet port
F15: NPT1/8

3-port normally open (NO) Note5
With outlet port
female thread block
With inlet port
female thread block Note6

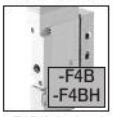

-F4B inlet/outlet port
F15: Rc1/8
-F4BH inlet/outlet port
F15: NPT1/8

3-port normally closed (NC) Note5
With outlet port
single use fitting block
With inlet port
female thread block Note6

Outlet port fitting
F15: ϕ6

3-port normally open (NO) Note5
With outlet port
single use fitting block
With inlet port
female thread block Note6

Outlet port fitting
F15: ϕ6

3-port normally closed (NC) Note5
With outlet port
single use fitting block
With inlet port
female thread block Note6

Outlet port fitting
F15: ϕ8

3-port normally open (NO) Note5
With outlet port
single use fitting block
With inlet port
female thread block Note6

Outlet port fitting
F15: ϕ8

Wiring specification

L type plug connector
Without connector

S type plug connector
Without connector

S type plug connector
Lead wire 300 mm
[11.8 in.]

L type plug connector
Lead wire 300 mm
[11.8 in.]

S type plug connector
Lead wire 3000 mm
[118 in.]

L type plug connector
Lead wire 3000 mm
[118 in.]

DIN connector type
with indicator Note12

DIN connector type
without connector Note12

-39N

Valve specification

T0 : 2-position, for single solenoid only
T1 : 2-position single solenoid specification (for both single and double solenoid use)
T2 : 2-position double solenoid specification (for both single and double solenoid use)
T3 : 3-position closed center
T4 : 3-position exhaust center Note3
T5 : 3-position pressure center Note3
TA : Tandem 3-port (NC and NC) Note4
TB : Tandem 3-port (NO and NO) Note4
TC : Tandem 3-port (NC and NO) Note4

Operation type

Blank
Internal pilot type

G
External pilot type Note
(for positive pressure)

V
External pilot type Note
(for vacuum) ※
※ This is a vacuum valve.

Note: When using as a single unit, select **-A2** (A type with sub-base) for the valve outlet type. Without a sub-base, piping for the external pilot is not possible.

Manual override

Manual override button

No protrusion with DIN connector

Manual override lever Note1

Protruding locking type Note11

Valve size	Valve specification	Operation type	IP Specifications	Manual override	Valve outlet type	UL compatible type	Wiring specification	Voltage
F15 F15L	T0 T1 T2 T3 T4 Note3 T5 Note3 TA Note4 TB Note4 TC Note4	Blank G V	Blank -P Note9 Note10	Blank -R Note1 -83 Note11	Blank Note2 -A1 Note2 -A2 -A2H -FJ Note2, 3 -FJ5 Note2, 3 -FJ6 Note2, 3 -FM Note2, 3 -FMH Note2, 3 -F3 Note4 -F4 Note4 -F4H Note4 -F5 Note4 -F6 Note4 -FJ5A Note2, 3 -FJ5B Note2, 3 -FJ6A Note2, 3 -FJ6B Note2, 3 -FMA Note2, 3 -FMAH Note2, 3 -FMB Note2, 3 -FMBH Note2, 3 -F4A Note4 -F4AH Note4 -F4B Note4 -F4BH Note4 -F5A Note4 -F5B Note4 -F6A Note4 -F6B Note4	Blank: - -UR: UL certified product	Blank -PN -PS -PL -PS3 -PL3 -39L Note12 -39N Note12	DC24V DC12V Note7 AC100V Note8, 13 AC120V Note8 AC240V Note8, 11

Notes: 1. When the valve specification is **T1** or **T2**, the manual override lever is placed only on the A side.
2. Two manifold mounting screws are included.
3. Not available in the vacuum valves.
4. Not available in external pilot type and vacuum valves.
5. Only for valve specification **T0**, **T1**, and **T2**.
6. Thread size for the inlet port female thread block is **F15:** Rc 1/8.
7. Not available in low-current type.
8. Not available in low-current type and tandem 3-port valves.
9. The IP65 protective structure around an electrical device that prevents the infiltration of solid foreign material and water from outside.
10. UR is unsupported.
11 Only for wiring specification **-39** □ .
12 Only for **F15** series and not available for valve specification **T1**, **TA**, **TB**, and **TC**. In addition, the valve is used only as a double solenoid for **T2**.
13 Not available with DIN connectors.

Remark: Negative common specifications are also available as made to order products (add **-129W** to the end of order code). For details, consult us.

● For internal pilot

F15Z - □

Valve size
15: 15 mm [0.591 in.] width

Parts content
21 : Mounting bracket (mounting bracket, 2 mounting screws)
25 : Sub-base Rc1/8 (sub-base body, gasket, exhaust valve)Note1
25H : Sub-base NPT1/8 (sub-base body, gasket, exhaust valve)Note1
P : Plate (plate, gasket, 2 mounting screws)
J : Dual use fitting block (fitting block, gasket, 2 mounting screws)
J5 : Single use fitting block **F15:** ϕ6 (fitting block, gasket, 2 mounting screws)
J6 : Single use fitting block **F15:** ϕ8 (fitting block, gasket, 2 mounting screws)
J5A : Single use fitting block for 3-port **F15:** ϕ6 (fitting block, gasket, 2 mounting screws) Note3
J6A : Single use fitting block for 3-port **F15:** ϕ8 (fitting block, gasket, 2 mounting screws) Note3
M : Female thread block (female thread block, gasket, 2 mounting screws)
MH : Female thread block **F15:** NPT1/8 (female thread block, gasket, 2 mounting screws)
MA : Female thread block for 3-port (female thread block, gasket, 2 mounting screws)Note3
MAH : Female thread block for 3-port **F15:** NPT1/8 (female thread block, gasket, 2 mounting screws)Note3
MP : P port female thread block (P port female thread block, gasket)Note1
MPH : P port female thread block **F15:** NPT1/8 (P port female thread block, gasket)Note1
MPP : IP dedicated P port female thread block (P port female thread block, gasket)
GS1 : Gasket (gasket, exhaust valve)Note2

Notes: 1. Valve mounting screws are not included.
2. Caution should be exercised as this gasket is different from the **GS2** gasket for the split-type manifolds.
3. Common to both normally closed (NC) and normally open (NO) types. Select the mounting direction by application requirements.

● For external pilot

F15Z - □

Valve size
15: 15mm [0.591 in.] width

Parts content
P : Plate (plate, gasket, 2 mounting screws)
J : Dual use fitting block (fitting block, gasket, 2 mounting screws)
J5 : Single use fitting block **F15:** ϕ6 (fitting block, gasket, 2 mounting screws)
J6 : Single use fitting block **F15:** ϕ8 (fitting block, gasket, 2 mounting screws)
J5A : Single use fitting block for 3-port **F15:** ϕ6 (fitting block, gasket, 2 mounting screws) Note1
J6A : Single use fitting block for 3-port **F15:** ϕ 8 (fitting block, gasket, 2 mounting screws) Note1
M : Female thread block (female thread block, gasket, 2 mounting screws)
MH : Female thread block **F15:** NPT1/8 (female thread block, gasket, 2 mounting screws)
MA : Female thread block for 3-port (female thread block, gasket, 2 mounting screws)Note1
MAH : Female thread block for 3-port **F15:** NPT1/8 (female thread block, gasket, 2 mounting screws)Note1
GS1 : Gasket (gasket, exhaust valve)Note2

Notes: 1. Common to both normally closed (NC) and normally open (NO) types. Select the mounting direction by application requirements.
2. Caution should be exercised as this gasket is different from the **GS2** gasket for the split type manifolds.

Sub-base for external pilot

F15ZG - 25

Valve size
15: 15 mm [0.591 in.] width
Sub-base Rc1/8

F15ZG - 25H

Valve size
15: 15 mm [0.591 in.] width
Sub-base NPT1/8

Connector-related order codes

JAZ - □ - □

UL compatible type Note1
Blank: -
UR : UL certified product

Valve specification
For **T1, T2, T3, T4, T5, TA, TB, TC**

Connector specification
CP : Connector, lead wire length 300 mm [11.8 in.] (black, red, white, for total of 3 lead wires)
CP3 : Connector, lead wire length 3000 mm [118 in.] (black, red, white, for total of 3 lead wires)
CPN : Connector without lead wire (1 short bar and 3 contacts included)

Remarks: A connector for negative common is also available. See p. 22 for details. (UR is unsupported)
Notes: 1. The lead wire thickness is 24AWG when Blank or 22AWG when UR is specified.

JAZ0 - □ - □

UL compatible type Note1
Blank: -
UR : UL certified product

Valve specification
For **T0**

Connector specification
CP : Connector, lead wire length 300 mm [11.8 in.] (black, red, for total of 2 lead wires)
CP3 : Connector, lead wire length 3000 mm [118 in.] (black, red, for total of 2 lead wires)
CPN : Connector without lead wire (1 short bar, 2 contacts included)

FZ - □

Valve specification
For **T1, T2, T3, T4, T5, TA, TB, TC**

Connector specification
CC1.5 : Cabtyre cable length 1500 mm [59 in.] ※
CC3 : Cabtyre cable length 3000 mm [118 in.] ※

※ For details, see p. 22.

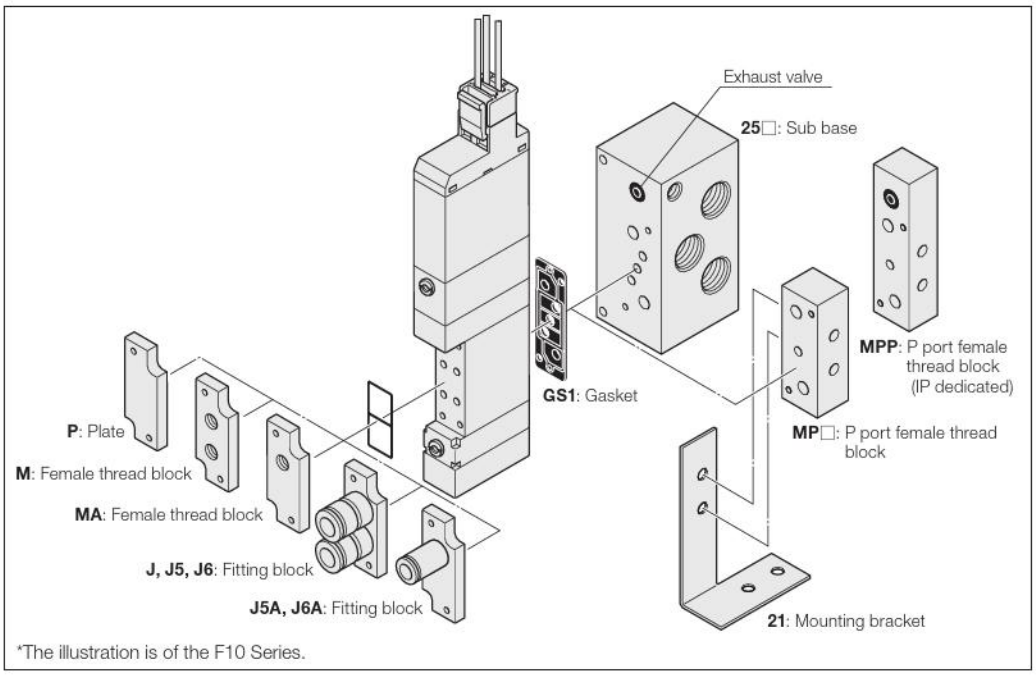

*The illustration is of the F10 Series.

Connector-related order codes

JAZ - P - □ (for double use only)

Valve specification
For **T2, T3, T4, T5, TA, TB,** or **TC**

Connector specification

CP : Connector, lead wire length 300 mm [11.8 in.] (black, red, white, for total of 3 lead wires)
CP3 : Connector, lead wire length 3000 mm [118 in.] (black, red, white, for total of 3 lead wires)
PA : Positive common A type, lead wire length 300 mm [11.8 in.]※
PA3 : Positive common A type, lead wire length 3000 mm [118 in.]※
PB : Positive common B type, lead wire length 300 mm [11.8 in.]※
PB3 : Positive common B type, lead wire length 3000 mm [118 in.]※
PC : Positive common C type, lead wire length 300 mm [11.8 in.]※
PC3 : Positive common C type, lead wire length 3000 mm [118 in.]※
※A common connector assembly.

Notes:
1. When the valve specification is **T1**, select the **JAZ0-P-** □ single dedicated type.
2. When switching between the single and double type (**T1**/**T2**), purchase and use a dedicated connector for single or double use (the number of seal holes in the lead wire differs for the single and double type).
3. There is no white lead wire for the **JAZ0-P-** □ .
4. It is necessary to disassemble the connector to add a common connector assembly. Contact your nearest KOGANEI sales office.
5. For information on use in locations/atmospheres subject to substances other than water, such as organic solvents, cutting oil, or reagents, contact your nearest KOGANEI sales office.
6. For information on replacing the waterproof seal, contact your nearest KOGANEI sales office.

JAZ0 - P - □ (for single use only)

Valve specification
For **T0/T1**

Connector specification

CP : Connector, lead wire length 300 mm [11.8 in.] (black, red, for total of 2 lead wires)
CP3 : Connector, lead wire length 3000 mm [118 in.] (black, red, for total of 2 lead wires)
PA : Positive common A type, lead wire length 300 mm [11.8 in.]※
PA3 : Positive common A type, lead wire length 3000 mm [118 in.]※
PB : Positive common B type, lead wire length 300 mm [11.8 in.]※
PB3 : Positive common B type, lead wire length 3000 mm [118 in.]※
PC : Positive common C type, lead wire length 300 mm [11.8 in.] ※
PC3 : Positive common C type, lead wire length 3000 mm [118 in.]※
※A common connector assembly.

F15 Series Monoblock Manifold A Type (Base Piping Type) Order Codes

Valve size

F15M 15 mm [0.591 in.] width

Manifold outlet specification

With dual use fitting blocks (base piping type)

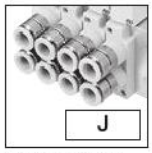

Outlet port fitting
F15: ϕ6, ϕ8

With selectable fittings (base piping type)

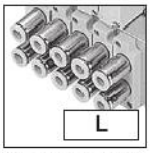

Outlet port should be selected in accordance with the manifold fitting specification.

With female thread blocks (base piping type)

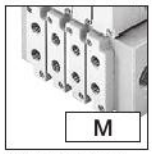

Outlet port female thread
F15: Rc1/8

Valve specification

T0 : 2-position, for single solenoid only
T1 : 2-position, single solenoid specification
T2 : 2-position, double solenoid specification
T3 : 3-position, closed center
T4 : 3-position, exhaust center Note6
T5 : 3-position, pressure center Note6
TA : Tandem 3-port (NC and NC) Note7
TB : Tandem 3-port (NO and NO) Note7
TC : Tandem 3-port (NC and NO) Note7

Valve size

F15 Standard type

F15L Low-current type

Pilot specification

Blank Internal pilot manifold

G External pilot manifold

Operation type

Blank
Internal pilot type Note4

G
External pilot type Note5 (for positive pressure)

V
External pilot type Note5 (for vacuum) ※
※ : This is a vacuum valve.

Note: Cannot be mounted together with a positive pressure valve.

Manual override

Manual override button

Manual override lever Note2

Protruding locking type

Valve outlet type

With plate Note3 (base piping type)

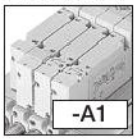

Wiring specification Note11

L type plug connector
Without connector

Pre-wired positive common terminal
S type plug connector
Lead wire 300 mm [11.8 in.]

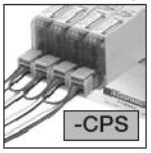

S type plug connector
Without connector

Pre-wired positive common terminal
L type plug connector
Lead wire 300 mm [11.8 in.]

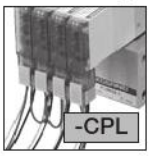

S type plug connector
Lead wire 300 mm [11.8 in.]

Pre-wired positive common terminal
S type plug connector
Lead wire 3000 mm [118 in.]

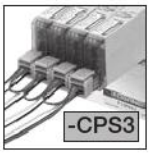

L type plug connector
Lead wire 300 mm [11.8 in.]

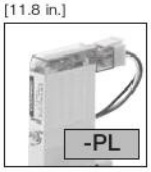

Pre-wired positive common terminal
L type plug connector
Lead wire 3000 mm [118 in.]

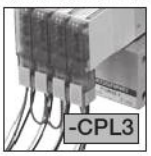

S type plug connector
Lead wire 3000 mm [118 in.]

DIN connector type with indicator Note15

L type plug connector
Lead wire 3000 mm [118 in.]

DIN connector type without connector Note15

-39N

Individual air supply and exhaust spacer, stop valve

Blank : No spacer and no stop valve
-NP6 : Single intake spacer (with ϕ 6 joint for F15)
-NP8 : Single intake spacer (with ϕ 8 joint for F15)
-NR6 : Single exhaust spacer (with ϕ 6 joint for F15)
-NR8 : Single exhaust spacer (with ϕ 8 joint for F15)
-STP : With stop valve Note4
For details, see p. 26.

Manifold fitting specification

5-port specification

-J5	With single use fitting block (base piping type)	**F15:** ϕ6
-J6	With single use fitting block (base piping type)	**F15:** ϕ8
-M	With female thread block (base piping type)	**F15:** Rc1/8
-MH	With female thread block Note17 (base piping type)	**F15:** NPT1/8

3-port specification

-J5A	With single use fitting block, normally closed (NC) (base piping type)	**F15:** ϕ6
-J5B	With single use fitting block, normally open (NO) (base piping type)	**F15:** ϕ6
-J6A	With single use fitting block, normally closed (NC) (base piping type)	**F15:** ϕ8
-J6B	With single use fitting block, normally open (NO) (base piping type)	**F15:** ϕ8
-MA	With female thread block, normally closed (NC) (base piping type)	**F15:** Rc1/8
-MAH	With female thread block, normally closed (NC) Note17 (base piping type)	**F15:** NPT1/8
-MB	With female thread block, normally open (NO) Note16 (base piping type)	**F15:** Rc1/8
-MBH	With female thread block, normally open (NO) Note17 (base piping type)	**F15:** NPT1/8

Caution: The 3-port specifications are only available in the valve specification **T0**, **T1**, and **T2**.

Back pressure prevention valve

Blank No back pressure prevention valve

-E1 With back pressure prevention valve Note8

Valve size	Valve units	Manifold type	Manifold output specification	Pilot specification	Station	Valve size	Valve specification	Operation type	IP specification	Manual override	Valve outlet type	Wiring specification	Manifold fitting specification	Back pressure prevention valve	Individual air supply and exhaust spacer, stop valve	Voltage
Manifold model					Mounting valve model											
F15M	2 ⋮ 20	A	J M	Blank G	stn. 1 ⋮ stn.□ Note1	F15 F15L	T0 TA Note7 T1 TB Note7 T2 TC Note7 T3 T4 Note6 T5 Note6	Blank Note4 G Note6 V Note6	Blank -P Note12	Blank -R Note2 -83	-A1 Note3	Blank Note11 -PN -CPS -PS -CPL -PL -CPS3 -PS3 -CPL3 -PL3		Blank -E1 Note8	Blank -NP6 -NP8 -NR6 -NR8 -STP Note4	DC24V DC12V Note9 AC100V Note10 AC120V Note10
						F15	BP (for block-off plate)								Blank -STP Note4	
F15M	2 ⋮ 20	A AH	L	Blank G	stn. 1 ⋮ stn.□ Note1	F15 F15L	T0 TA Note7 T1 TB Note7 T2 TC Note7 T3 T4 Note6 T5 Note6	Blank Note4 G Note5 V Note5	Blank -P Note12	Blank -R Note2 -83	-A1 Note3	Blank -CPS -PN -CPL -PS -CPS3 -PL -CPL3 -PS3 -39L Note15 -PL3 -39N Note15	-J5 Note18 -J6A Note16 -J6 Note18 -J6B Note16 -M Note16 -MA Note18 -MH Note17 -MAH Note17 -J5A Note18 -MB Note18 -J5B Note18 -MBH Note17	Blank -E1 Note8	Blank -NP6 -NP8 -NR6 -NR8 -STP Note4	DC24V DC12V Note9 AC100V Note10, 18 AC120V Note10 AC240V Note10,14
						F15	BP (for block-off plate)								Blank -STP Note4	

Notes:
1. Valve mounting location is from the left, with the solenoid on top, and the 4(A), 2(B) ports side in front.
2. When the valve specification is **T1** or **T2**, the manual override lever is placed only on the A side.
3. Always enter **-A1**.
4. Cannot be mounted on the external pilot manifold.
5. Cannot be mounted on the internal pilot manifold.
6. Not available in the vacuum valves.
7. Not available in external pilot type and vacuum valves.
8. Not available with the individual exhaust spacer and vacuum valve.
9. Not available in low-current type.
10. Not available in the low current type and tandem 3-port valves.
11. The **-P** □ (including when Blank) and **-CP** □ wiring specifications cannot be mixed.
12. The IP65 protective structure around an electrical device that prevents the infiltration of solid foreign material and water from outside.
13. 3 port type is only supported by the **T0**, **T1**, and **T2** valve type.
14. Only for wiring specification **-39**□.
15. Only for **F15** series and not available for valve specification **T1**, **TA**, **TB**, and **TC**. In addition, the valve is used only as a double solenoid for **T2**.
16. Can be selected only when the manifold type is **A**.
17. Can be selected only when the manifold type is **AH**.
18. Not available with DIN connectors (**-39**□).

Remark: Negative common specifications are also available as made to order products (add **-129W** to the ends of the valve and manifold model order codes). For details, consult us.

Gasket (gasket and exhaust valve)

F15Z - GS1

Valve size
15: 15 mm [0.591 in.] width

Block-off plate (block-off plate and 2 mounting screws)

F15BP

Valve size
15: 15 mm [0.591 in.] width

Connector-related order codes

JAZ □ - □

※ For details, see p. 22.

Valve specification
Blank: For **T1, T2, T3, T4, T5, TA, TB, TC**
0: For **T0**

Connector specification
CP : Connector, lead wire length 300 mm [11.8 in.]
CP3 : Connector, lead wire length 3000 mm [118 in.]
CPN : Connector without lead wire (short bar and contacts included)
PA : Positive common A type, lead wire length 300 mm [11.8 in.] ※
PA3 : Positive common A type, lead wire length 3000 mm [118 in.] ※
PB : Positive common B type, lead wire length 300 mm [11.8 in.] ※
PB3 : Positive common B type, lead wire length 3000 mm [118 in.] ※
PC : Positive common C type, lead wire length 300 mm [11.8 in.] ※
PC3 : Positive common C type, lead wire length 3000 mm [118 in.] ※

FZ - □

Valve specification
For **T1, T2, T3, T4, T5, TA, TB, TC**

Connector specification
CC1.5 : Cabtyre cable length 1500 mm [59 in.] ※
CC3 : Cabtyre cable length 3000 mm [118 in.] ※

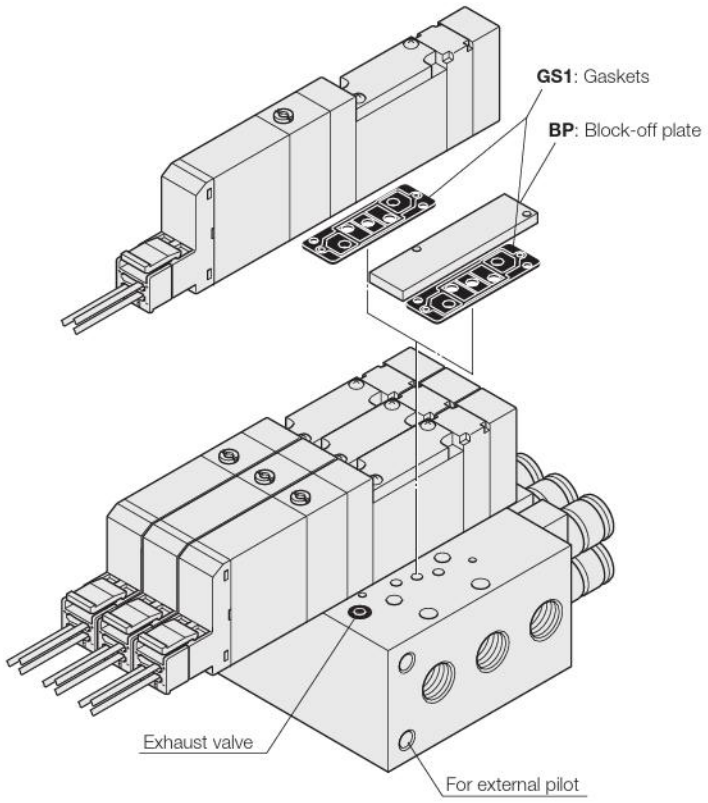

*The illustration is of the F10 Series.

● Common connector assembly

A type: JAZ-PA□※

Red Common wire (+)
Black A side (–)
White B side (–) (Insert when using as double solenoid) Note

B type: JAZ-PB□※

Red Common wire (+)
Black A side (–)
White B side (–) (Insert when using as double solenoid) Note

C type: JAZ-PC□※

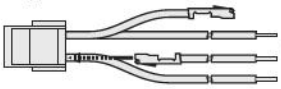

Red Common wire (+)
Black A side (–)
White B side (–) (Insert when using as double solenoid) Note
Red Common wire (+)

※ Lead wire length **Blank:** 300 mm [11.8 in.]
3: 3000 mm [118 in.]

Note: White lead wire is not available for **JAZ0-P□□**.

Remark: Connector for negative common type also available. For details, see p.22.

Back pressure prevention valve
(for monoblock type, 2 pieces)

F15Z - E1

Valve size
15: 15 mm [0.591 in.] width

Individual air supply and exhaust spacer
(Spacer for non-plug-in type, gasket, exhaust valve, and 2 mounting screws)

F15Z - □

Valve size
15: 15 mm [0.591 in.] width

Specification
NP6: Single intake spacer (with ϕ6 joint for F15)
NP8: Single intake spacer (with ϕ8 joint for F15)
NR6: Single exhaust spacer (with ϕ6 joint for F15)
NR8: Single exhaust spacer (with ϕ8 joint for F15)

※ For details, see p. 27.

Manifold Order Code Example
(6 units of F15 Series)

F15M6AL

stn.1 ~ 2	**F15T0-A1-PS-J5 DC24V**
stn.3 ~ 5	**F15T2-A1-PS-J6 DC24V**
stn.6	**F15BP-J6**

Note: This order code example has no relationship to the illustration at upper right.

Muffler

KM - J □

Fitting size
6: Outer diameter ϕ 6 (for individual exhaust spacer)
8: Outer diameter ϕ 8 (for individual exhaust spacer)
(Sales unit: Set of 10 mufflers)

Precautions for Order Codes

● **Manifold outlet specification**
Select from among "dual use fitting blocks", "with female thread blocks" or "with selectable fittings." For repair or replacement, purchase the single valve unit additional parts, **F □ Z-J** (dual use fitting block), **F □ Z-J □** (single use fitting block), or **F □ Z-M □** (female thread block), on p. 163.

● **Orders for valves only**
Place orders from "Single Valve Unit Order Codes" on p. 66. Note, however, that the only available valve outlet type is **A1**. In addition, for common terminal wiring connections, order the common connector assemblies listed above separately.

Connector-related order codes

JAZ - P - □ (for double use only)

Valve specification
For **T2, T3, T4, T5, TA, TB,** or **TC**

Connector specification

CP : Connector, lead wire length 300 mm [11.8 in.] (black, red, white, for total of 3 lead wires)
CP3 : Connector, lead wire length 3000 mm [118 in.] (black, red, white, for total of 3 lead wires)
PA : Positive common A type, lead wire length 300 mm [11.8 in.]※
PA3 : Positive common A type, lead wire length 3000 mm [118 in.]※
PB : Positive common B type, lead wire length 300 mm [11.8 in.]※
PB3 : Positive common B type, lead wire length 3000 mm [118 in.]※
PC : Positive common C type, lead wire length 300 mm [11.8 in.]※
PC3 : Positive common C type, lead wire length 3000 mm [118 in.]※
※A common connector assembly.

JAZ0 - P - □ (for single use only)

Valve specification
For **T0/T1**

Connector specification

CP : Connector, lead wire length 300 mm [11.8 in.] (black, red, for total of 2 lead wires)
CP3 : Connector, lead wire length 3000 mm [118 in.] (black, red, for total of 2 lead wires)
PA : Positive common A type, lead wire length 300 mm [11.8 in.]※
PA3 : Positive common A type, lead wire length 3000 mm [118 in.]※
PB : Positive common B type, lead wire length 300 mm [11.8 in.]※
PB3 : Positive common B type, lead wire length 3000 mm [118 in.]※
PC : Positive common C type, lead wire length 300 mm [11.8 in.] ※
PC3 : Positive common C type, lead wire length 3000 mm [118 in.]※
※A common connector assembly.

Notes:
1. When the valve specification is **T1**, select the **JAZ0-P-** □ single dedicated type.
2. When switching between the single and double type (**T1**/**T2**), purchase and use a dedicated connector for single or double use (the number of seal holes in the lead wire differs for the single and double type).
3. There is no white lead wire for the **JAZ0-P-** □ .
4. It is necessary to disassemble the connector to add a common connector assembly. Contact your nearest KOGANEI sales office.
5. For information on use in locations/atmospheres subject to substances other than water, such as organic solvents, cutting oil, or reagents, contact your nearest KOGANEI sales office.
6. For information on replacing the waterproof seal, contact your nearest KOGANEI sales office.

F15 Series Monoblock Manifold F Type (Direct Piping Type) Order Codes

*The illustration is of the F10 Series.

Valve size

F15M

15 mm [0.591 in.] width

Valve specification

T0 : 2-position, for single solenoid only
T1 : 2-position, single solenoid specification
T2 : 2-position, double solenoid specification
T3 : 3-position, closed center
T4 : 3-position, exhaust center
T5 : 3-position, pressure center
TA : Tandem 3-port (NC and NC)
TB : Tandem 3-port (NO and NO)
TC : Tandem 3-port (NC and NO)

Manual override

Manual override button

No protrusion with DIN connector

Manual override lever[Note2]

Protruding locking type[Note9]

Valve outlet type

5-port specification

-FJ	With dual use fitting block (direct piping type)	F15: ϕ6, ϕ8
-FJ5	With single use fitting block (direct piping type)	F15: ϕ6
-FJ6	With single use fitting block (direct piping type)	F15: ϕ8
-FM	With female thread block (direct piping type)	F15: Rc1/8
-FMH	With female thread block[Note11] (direct piping type)	F15: NPT1/8

3-port specification

-FJ5A	With single use fitting block, normally closed (NC) (direct piping type)	F15: ϕ6
-FJ5B	With single use fitting block, normally open (NO) (direct piping type)	F15: ϕ6
-FJ6A	With single use fitting block, normally closed (NC) (direct piping type)	F15: ϕ8
-FJ6B	With single use fitting block, normally open (NO) (direct piping type)	F15: ϕ8
-FMA	With female thread block, normally closed (NC) (direct piping type)	F15: Rc1/8
-FMAH	With female thread block, normally closed (NC)[Note9] (direct piping type)	F15: NPT1/8
-FMB	With female thread block, normally open (NO)[Note6] (direct piping type)	F15: Rc1/8
-FMBH	With female thread block, normally open (NO)[Note9] (direct piping type)	F15: NPT1/8

Caution: The 3-port specifications are only available in the valve specification **T0**, **T1**, and **T2**.

Wiring specification[Note6]

L type plug connector
Without connector

S type plug connector
Lead wire 3000 mm [118 in.]

Pre-wired positive common terminal
S type plug connector
Lead wire 3000 mm [118 in.]

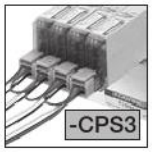

S type plug connector
Without connector

L type plug connector
Lead wire 3000 mm [118 in.]

Pre-wired positive common terminal
L type plug connector
Lead wire 3000 mm [118 in.]

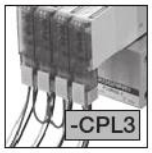

S type plug connector
Lead wire 300 mm [11.8 in.]

Pre-wired positive common terminal
S type plug connector
Lead wire 300 mm [11.8 in.]

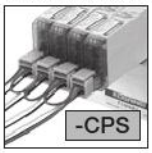

DIN connector type with indicator[Note7]

L type plug connector
Lead wire 300 mm [11.8 in.]

Pre-wired positive common terminal
L type plug connector
Lead wire 300 mm [11.8 in.]

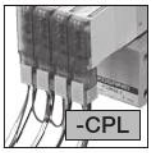

DIN connector type without connector[Note7]

-39N

Individual air supply and exhaust spacer, stop valve

Blank : No spacer and no stop valve
-NP6 : Single intake spacer (with ϕ6 joint for F15)
-NP8 : Single intake spacer (with ϕ8 joint for F15)
-NR6 : Single exhaust spacer (with ϕ6 joint for F15)
-NR8 : Single exhaust spacer (with ϕ8 joint for F15)
-STP : With stop valve

For details, see p. 27.

Valve size

F15	Standard type
F15L	Low-current type

Back pressure prevention valve

Blank	No back pressure prevention valve
-E1	With back pressure prevention valve[Note3]

Valve size	Valve units	Manifold type	Station	Valve size	Valve specification	IP specification	Manual override	Valve outlet type	Wiring specification	Back pressure prevention valve	Individual air supply and exhaust spacer, stop valve	Voltage
Manifold model					Mounting valve model							
F15M	2 ⋮ 20	F FH	stn. 1 ⋮ stn.□ Note1	F15 F15L	T0 TA T1 TB T2 TC T3 T4 T5	Blank -P[Note7]	Blank -R[Note2] -83[Note9]	-FJ[Note11] -FJ6A[Note11] -FJ5[Note11] -FJ6B[Note11] -FJ6[Note11] -FMA[Note11] -FM[Note11] -FMAH[Note12] -FMH[Note11] -FMB[Note11] -FJ5A[Note11] -FMBH[Note12] -FJ5B[Note11]	Blank -CPS -PN -CPL -PS -CPS3 -PL -CPL3 -PS3 -39L[Note10] -PL3 -39N[Note10]	Blank -E1[Note3]	Blank -NP6 -NR8 -NP8 -STP -NR6	DC24V DC12V[Note4] AC100V[Note5, 13] AC120V[Note5] AC240V[Note5, 6]
				F15	BP (for block-off plate)						Blank -STP	

Notes:
1. Valve mounting location is from the left, with the solenoid on top, and the 4(A), 2(B) ports side in front.
2. When the valve specification is **T1** or **T2**, the manual override lever is placed only on the A side. This is not available with **-39**□.
3. Not available with the individual exhaust spacer.
4. Not available in low-current type.
5. Not available in low-current type and tandem 3-port valves.
6. The **-P** □ (including when Blank) and **-CP** □ wiring specifications cannot be mixed.
7. The IP65 protective structure around an electrical device that prevents the infiltration of solid foreign material and water from outside.
8. 3 port type is only supported by the **T0**, **T1**, and **T2** valve type.
9. Only for wiring specification **-39** □ .
10. Only for **F15** series and not available for valve specification **T1**, **TA**, **TB**, and **TC**. In addition, the valve is used only as a double solenoid for **T2**.
11. Can be selected only when the manifold type is **F**.
12. Can be selected only when the manifold type is **FH**.
13. Not available with DIN connectors (**-39** □).

Remarks:
1. The external pilot type valve cannot be mounted on the F type manifold.
2. Negative common specifications are also available as made to order products (add **-129W** to the ends of the valve and manifold model order codes). For details, consult us.

Gasket (gasket and exhaust valve)

F15Z - GS1

Valve size
15: 15 mm [0.591 in.] width

Block-off plate (block-off plate and 2 mounting screws)

F15BP

Valve size
15: 15 mm [0.591 in.] width

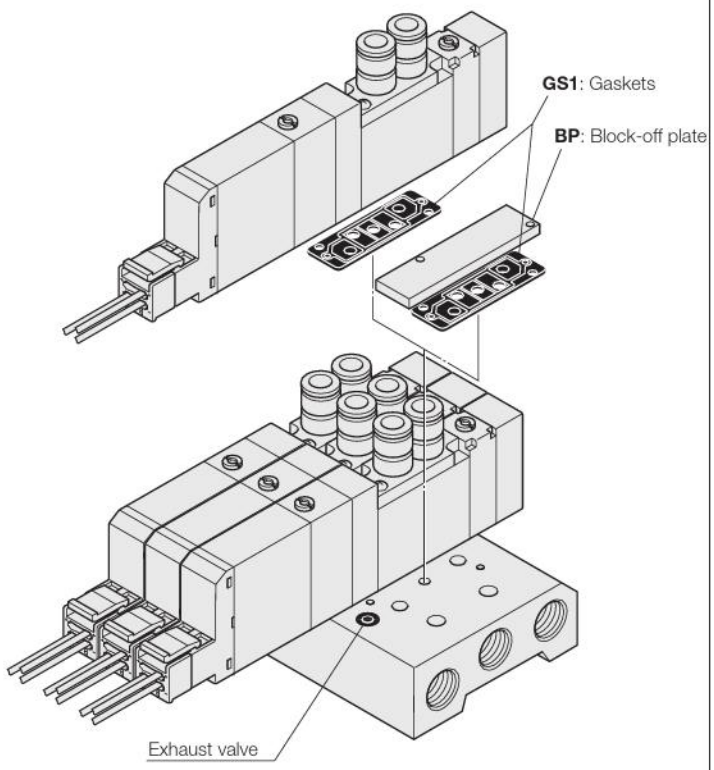

*The illustration is of the F10 Series.

Connector-related order codes

JAZ □ - □

※ For details, see p. 22.

Valve specification
Blank: For **T1, T2, T3, T4, T5, TA, TB, TC**
0: For **T0**

Connector specification
CP : Connector, lead wire length 300 mm [11.8 in.]
CP3 : Connector, lead wire length 3000 mm [118 in.]
CPN: Connector without lead wire (short bar, contacts included)
PA : Positive common A type, lead wire length 300 mm [11.8 in.] ※
PA3 : Positive common A type, lead wire length 3000 mm [118 in.] ※
PB : Positive common B type, lead wire length 300 mm [11.8 in.] ※
PB3 : Positive common B type, lead wire length 3000 mm [118 in.] ※
PC : Positive common C type, lead wire length 300 mm [11.8 in.] ※
PC3 : Positive common C type, lead wire length 3000 mm [118 in.] ※

FZ - □

Valve specification
For **T1, T2, T3, T4, T5, TA, TB, TC**

Connector specification
CC1.5 : Cabtyre cable length 1500 mm [59 in.] ※
CC3 : Cabtyre cable length 3000 mm [118 in.] ※

● Common connector assembly

A type: JAZ-PA□※

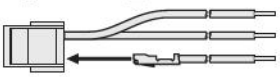

Red Common wire (+)
Black A side (–)
White B side (–) (Insert when using as double solenoid) Note

B type: JAZ-PB□※

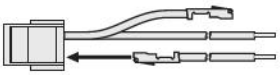

Red Common wire (+)
Black A side (–)
White B side (–) (Insert when using as double solenoid) Note

C type: JAZ-PC□※

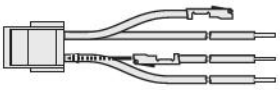

Red Common wire (+)
Black A side (–)
White B side (–) (Insert when using as double solenoid) Note
Red Common wire (+)

※ Lead wire length **Blank:** 300 mm [11.8 in.] **3:** 3000 mm [118 in.]

Note: White lead wire is not available for **JAZ0-P□□**.

Remark: Connector for negative common type also available. For details, see p. 27.

Back pressure prevention valve
(for monoblock type, 2 pieces)

F15Z - E1

Valve size
15: 15 mm [0.591 in.] width

Individual air supply and exhaust spacer

(Spacer for non-plug-in type, gasket, exhaust valve, and 2 mounting screws)

F15Z - □

Valve size
15: 15 mm [0.591 in.] width

Specification
NP6: Single intake spacer (with ϕ 6 joint for F15)
NP8: Single intake spacer (with ϕ 8 joint for F15)
NR6: Single exhaust spacer (with ϕ 6 joint for F15)
NR8: Single exhaust spacer (with ϕ 8 joint for F15)

※ For details, see p. 27.

Manifold Order Code Example
(4 units of F15 Series)

F15M4F

stn.1 ~ 2	F15T0-FJ5-PS DC24V
stn.3	F15T2-FJ6-PS DC24V
stn.4	F15BP

Note: This order code example has no relationship to the illustration at upper right.

Muffler

KM - J □

Fitting size
6: Outer diameter ϕ 6 (for individual exhaust spacer)
8: Outer diameter ϕ 8 (for individual exhaust spacer)
(Sales unit: Set of 10 mufflers)

Precautions for Order Codes

● **Orders for valves only**
Place orders from "Single Valve Unit Order Codes" on p. 163.
Select from valve outlet types **-FJ**, **-FJ5**, **-FJ6**, **-FM**, **-FJ5A**, **-FJ5B**, **-FJ6A**, **-FJ6B**, **-FMA**, or **-FMB**. In addition, for common terminal wiring connections, order the common connector assemblies listed above separately.

Connector-related order codes

JAZ - P - □ (for double use only)

Valve specification
For **T2, T3, T4, T5, TA, TB,** or **TC**

Connector specification

CP : Connector, lead wire length 300 mm [11.8 in.] (black, red, white, for total of 3 lead wires)
CP3 : Connector, lead wire length 3000 mm [118 in.] (black, red, white, for total of 3 lead wires)
PA : Positive common A type, lead wire length 300 mm [11.8 in.]※
PA3 : Positive common A type, lead wire length 3000 mm [118 in.]※
PB : Positive common B type, lead wire length 300 mm [11.8 in.]※
PB3 : Positive common B type, lead wire length 3000 mm [118 in.]※
PC : Positive common C type, lead wire length 300 mm [11.8 in.]※
PC3 : Positive common C type, lead wire length 3000 mm [118 in.]※
※A common connector assembly.

Notes:
1. When the valve specification is **T1**, select the **JAZ0-P-** □ single dedicated type.
2. When switching between the single and double type (**T1**/**T2**), purchase and use a dedicated connector for single or double use (the number of seal holes in the lead wire differs for the single and double type).
3. There is no white lead wire for the **JAZ0-P-** □ .
4. It is necessary to disassemble the connector to add a common connector assembly. Contact your nearest KOGANEI sales office.
5. For information on use in locations/atmospheres subject to substances other than water, such as organic solvents, cutting oil, or reagents, contact your nearest KOGANEI sales office.
6. For information on replacing the waterproof seal, contact your nearest KOGANEI sales office.

JAZ0 - P - □ (for single use only)

Valve specification
For **T0/T1**

Connector specification

CP : Connector, lead wire length 300 mm [11.8 in.] (black, red, for total of 2 lead wires)
CP3 : Connector, lead wire length 3000 mm [118 in.] (black, red, for total of 2 lead wires)
PA : Positive common A type, lead wire length 300 mm [11.8 in.]※
PA3 : Positive common A type, lead wire length 3000 mm [118 in.]※
PB : Positive common B type, lead wire length 300 mm [11.8 in.]※
PB3 : Positive common B type, lead wire length 3000 mm [118 in.]※
PC : Positive common C type, lead wire length 300 mm [11.8 in.] ※
PC3 : Positive common C type, lead wire length 3000 mm [118 in.]※
※A common connector assembly.

F15 Series Monoblock Manifold A Type, Wire-Saving Type (Base Piping Type) Order Codes

Valve size

F15M 15 mm [0.591 in.] width

Manifold outlet specification

With dual use fitting blocks (base piping type)

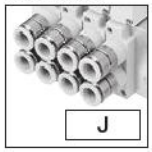

J

Outlet port fitting
F15: ϕ6, ϕ8

With selectable fittings (base piping type)

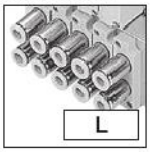

L

Outlet port should be selected in accordance with the manifold fitting specification.

With female thread blocks (base piping type)

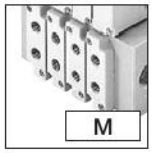

M

Outlet port female thread
F15: Rc1/8

Operation type

Blank
Internal pilot type[Note5]

G
External pilot type[Note6] (for positive pressure)

V
External pilot type[Note6] (for vacuum) ※
※ This is a vacuum valve.

Note: Cannot be mounted together with a positive pressure valve.

Manual override

Manual override button

Blank

Manual override lever[Note3]

-R

Valve outlet type

With plate[Note4] (base piping type)

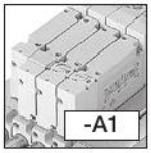

-A1

Individual air supply and exhaust spacer, stop valve

Blank: No spacer and no stop valve
-NP6 : Single intake spacer (with ϕ6 joint for F15)
-NP8 : Single intake spacer (with ϕ8 joint for F15)
-NR6 : Single exhaust spacer (with ϕ6 joint for F15)
-NR8 : Single exhaust spacer (with ϕ8 joint for F15)
-STP : With stop valve[Note5]
For details, see p. 26.

Wiring specification

-PN
S type plug connector[Note4]

Manifold fitting specification

5-port specification

-J5	With single use fitting block (base piping type)	**F15:** ϕ6
-J6	With single use fitting block (base piping type)	**F15:** ϕ8
-M	With female thread block (base piping type)	**F15:** Rc1/8
-MH	With female thread block[Note16] (base piping type)	**F15:** NPT1/8

3-port specification

-J5A	With single use fitting block, normally closed (NC) (base piping type)	**F15:** ϕ6
-J5B	With single use fitting block, normally open (NO) (base piping type)	**F15:** ϕ6
-J6A	With single use fitting block,normally closed (NC) (base piping type)	**F15:** ϕ8
-J6B	With single use fitting block, normally open (NO) (base piping type)	**F15:** ϕ8
-MA	With female thread block, normally closed (NC) (base piping type)	**F15:** Rc1/8
-MAH	With female thread block, normally closed (NC)[Note16] (base piping type)	**F15:** NPT1/8
-MB	With female thread block,normally open (NO)[Note15] (base piping type)	**F15:** Rc1/8
-MBH	With female thread block, normally open (NO)[Note16] (base piping type)	**F15:** NPT1/8

Caution: The 3-port specifications are only available in the valve specification **T0**, **T1**, and **T2**.

Valve specification

T0 : 2-position, for single solenoid only
T1 : 2-position, single solenoid specification
T2 : 2-position, double solenoid specification
T3 : 3-position, closed center
T4 : 3-position, exhaust center[Note8]
T5 : 3-position, pressure center[Note8]
TA : Tandem 3-port (NC and NC)[Note9]
TB : Tandem 3-port (NO and NO)[Note9]
TC : Tandem 3-port (NC and NO)[Note9]

Wiring specifications (wiring block)

(no power supply terminal only)

Flat cable connector (with socket and strain relief)

-F□

-F150N: 10-pin
-F151N: 10-pin
-F200N: 20-pin
-F201N: 20-pin
-F260N: 26-pin
For derails, see p. 47.

D-sub connector

-D25□

(M2.6 mounting screws)
-D250N: 25-pin[Note15]
-D251N: 25-pin[Note15]

(4-40UNC mounting screws)
-D250NU: 25-pin[Note16]
-D251NU: 25-pin[Note16]
For derails, see p. 47.

Valve size

F15 Standard type

F15L Low-current type

Wiring connection specification

Blank
Packed wiring: Wired to match the specifications of the mounted valve.

-W
Double wiring: Wiring is always for the double solenoid, regardless of the specifications of the mounted valve.

Pilot specification

Blank Internal pilot manifold

G External pilot manifold

Back pressure prevention valve

Blank No back pressure prevention valve

-E1 With back pressure prevention valve[Note10]

Valve size	Valve units	Manifold type	Manifold outlet specification	Pilot specification	Wiring specifications	Wiring connection specification	Station	Valve size	Valve specification	Operation type	Manual override	Valve outlet type	Wiring specification	Manifold fitting specification	Back pressure prevention valve	Individual air supply and exhaust spacer, stop valve	Voltage
Manifold model							Mounting valve model										
F15M	2 ⋮ □ Note1	A	J M	Blank G	-F150N -F151N -F200N -F201N -F260N -D250N -D251N	Blank -W	stn. 1 ⋮ stn.□ Note2	F15 F15L	T0 TA[Note9] T1 TB[Note9] T2 TC[Note9] T3 T4[Note8] T5[Note8]	Blank[Note5] G[Note6] V[Note6]	Blank -R[Note3]	-A1 Note4	-PN Note4		Blank -E1[Note10]	Blank -NP6 -NR8 -NP8 -STP[Note5] -NR6	DC24V DC12V[Note11] AC100V[Note14] AC120V[Note14]
								F15	BP (for block-off plate)[Note7]							Blank -STP[Note5]	
		A AH	L	Blank G	-F150N -F151N -F200N -F201N -F260N -D250N[Note15] -D251N[Note15] -D250NU[Note16] -D251NU[Note16]	Blank -W	stn. 1 ⋮ stn.□ Note2	F15 F15L	T0 TA[Note9] T1 TB[Note9] T2 TC[Note9] T3 T4[Note8] T5[Note8]	Blank[Note5] G[Note6] V[Note6]	Blank -R[Note3]	-A1 Note4	-PN Note4	-J5[Note13] -J6A[Note13] -J6[Note13] -J6B[Note13] -M[Note13] -MA[Note13] -MH[Note16] -MAH[Note14] -J5A[Note13] -MB[Note13] -J5B[Note13] -MBH[Note14]	Blank -E1[Note10]	Blank -NP6 -NR8 -NP8 -STP[Note5] -NR6	DC24V DC12V[Note11] AC100V[Note14] AC120V[Note14]
								F15	BP (for block-off plate)[Note7]							Blank -STP[Note5]	

Notes:
1. For the maximum number of units, see the table for maximum number of valve units by wiring specification, on p. 175.
2. Valve mounting location is from the left, with the solenoid on top, and the 4(A), 2(B) ports side in front.
3. When the valve specification is **T1** or **T2**, the manual override lever is placed only on the A side.
4. Always enter **-A1** and **-PN**.
5. Cannot be mounted on the external pilot manifold.
6. Cannot be mounted on the internal pilot manifold.
7. Caution should be exercised that the block-off plate wiring is always double wiring (allocated 2 control pins at 1 stn.), regardless of the wiring connection specification. For single wiring, see p. 175.
8. Not available in the vacuum valves.
9. Not available in external pilot type and vacuum valves.
10. Not available with the individual exhaust spacer and vacuum valve.
11. Not available in low-current type.
12. Not available in low-current type and tandem 3-port valves. In addition, only available when the wiring specification is a D-sub connector.
13. 3 port type is only supported by the **T0**, **T1**, and **T2** valve type.
14. Not available in low-current type and tandem 3-port valves. In addition, only available when the wiring specification is a D-sub connector.
15. Can be selected only when the manifold type is **A**.
16. Can be selected only when the manifold type is **AH**.

Gasket (gasket and exhaust valve)

F15Z - GS1

Valve size
15: 15 mm [0.591 in.] width

Block-off plate (block-off plate and 2 mounting screws)

F15BP

Valve size
15: 15 mm [0.591 in.] width

Back pressure prevention valve
(for monoblock type, 2 pieces)

F15Z - E1

Valve size
15: 15 mm [0.591 in.] width

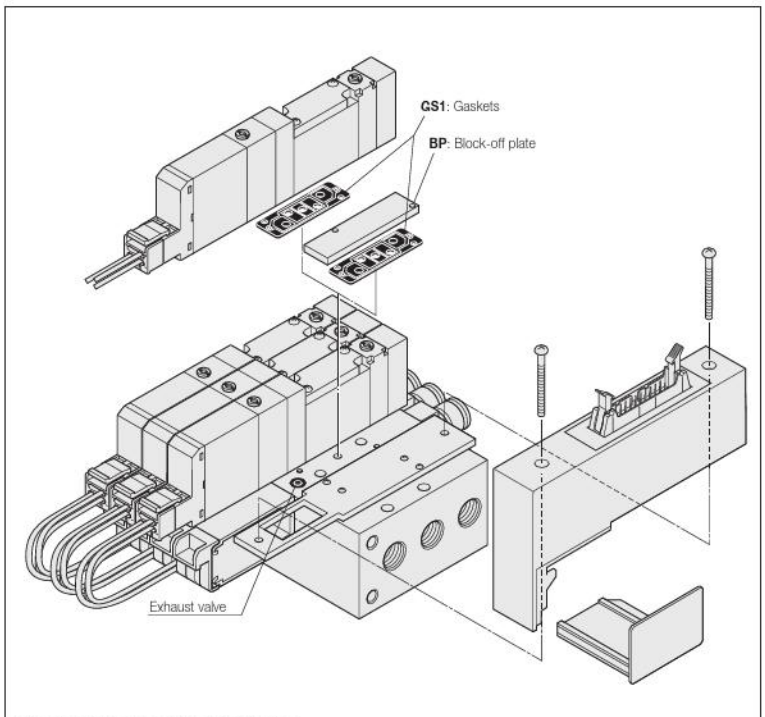

*The illustration is of the F10 Series.

Individual air supply and exhaust spacer
(Spacer for non-plug-in type, gasket, exhaust valve, and 2 mounting screws)

F15Z - □

Valve size
15: 15 mm [0.591 in.] width

Specification
NP6: Single intake spacer (with ϕ6 joint for F15)
NP8: Single intake spacer (with ϕ8 joint for F15)
NR6: Single exhaust spacer (with ϕ6 joint for F15)
NR8: Single exhaust spacer (with ϕ8 joint for F15)

※ For details, see p. 27.

Muffler

KM - J□

Fitting size
6: Outer diameter ϕ 6 (for individual exhaust spacer)
8: Outer diameter ϕ 8 (for individual exhaust spacer)
(Sales unit: Set of 10 mufflers)

Manifold Order Code Example
(6 units of F15 Series)

F15M6AL-F201N

stn.1 ~ 2	**F15T0-A1-PN-J5 DC24V**
stn.3 ~ 5	**F15T2-A1-PN-J6 DC24V**
stn.6	**F15BP-J6**

Note: This order code example has no relationship to the illustration at upper right.

■ Table for maximum number of valve units by wiring specification

Wiring specification	Max. outputs	Maximum number of units: Wiring connection specification: Packed wiring (**Blank**)	Maximum number of units: Wiring connection specification: Double wiring (**-W**)
F100N Flat cable (10P)	8	Varies depending on the number of mounted single solenoids, double solenoids, and block-off plates. The number of controlled solenoids should be designated as the maximum number of outputs or less.	4 units
F101N Flat cable (10P)	8		4 units
F200N Flat cable (20P)	16		8 units
F201N Flat cable (20P)	16		8 units
F260N Flat cable (26P)	20		10 units
D250N D-sub connector (25P)	16		8 units
D251N D-sub connector (25P)	20		10 units

Precautions for Order Codes

- **Manifold outlet specification**
  Select from among "dual use fitting blocks", "with female thread blocks" or "with selectable fittings." For repair or replacement, purchase the single valve unit additional parts, **F □ Z-J** (dual use fitting block), **F □ Z-J □** (single use fitting block), or **F □ Z-M □** (female thread block), on p. 163.
- **Orders for valves only**
  Place orders from "Single Valve Unit Order Codes" on p. 162. Note, however, that the only available valve outlet type is **A1**.
- **Wiring connection specification**
  Blank (packed wiring): Wired to match the specifications of the mounted valve.
  -W (double wiring): Wiring is always for the double solenoid, regardless of the specifications of the mounted valve.

Caution

Caution should be exercised that the block-off plate wiring is always double wiring (allocated 2 control pins at 1 stn.), regardless of the wiring connection specification.
The block-off plate wiring can be made as wiring for a single solenoid. Add **-1W** to the end of the block-off plate order code in the case.
For details, consult us.

F15 Series Monoblock Manifold F Type, Wire-Saving Type (Direct Piping Type) Order Codes

■ Valve size

F15M

15 mm [0.591 in.] width

■ Valve specification

T0 : 2-position, for single solenoid only
T1 : 2-position, single solenoid specification
T2 : 2-position, double solenoid specification
T3 : 3-position, closed center
T4 : 3-position, exhaust center
T5 : 3-position, pressure center
TA : Tandem 3-port (NC and NC)
TB : Tandem 3-port (NO and NO)
TC : Tandem 3-port (NC and NO)

■ Manual override

Manual override button

Manual override lever[Note3]

■ Valve outlet type

5-port specification

-FJ	With dual use fitting block (direct piping type)	**F15:** ϕ 6, ϕ 8
-FJ5	With single use fitting block (direct piping type)	**F15:** ϕ 6
-FJ6	With single use fitting block (direct piping type)	**F15:** ϕ 8
-FM	With female thread block (direct piping type)	**F15:** Rc1/8
-FMH	With female thread[Note11] block (direct piping type)	**F15:** NPT1/8

3-port specification

-FJ5A	With single use fitting block, normally closed (NC) (direct piping type)	**F15:** ϕ 6
-FJ5B	With single use fitting block, normally open (NO) (direct piping type)	**F15:** ϕ 6
-FJ6A	With single use fitting block, normally closed (NC) (direct piping type)	**F15:** ϕ 8
-FJ6B	With single use fitting block, normally open (NO) (direct piping type)	**F15:** ϕ 8
-FMA	With female thread block, normally closed (NC) (direct piping type)	**F15:** Rc1/8
-FMAH	With female thread block, normally closed (NC)[Note11] (direct piping type)	**F15:** ϕ 8 NPT1/8
-FMB	With female thread block, normally open (NO) (direct piping type)	**F15:** Rc1/8
-FMBH	With female thread block, normally open (NO)[Note11] (direct piping type)	**F15:** ϕ 8 NPT1/8

Caution: The 3-port specifications are only available in the valve specification **T0**, **T1**, and **T2**.

■ Wiring specification (wiring block)

(no power supply terminal only)

Flat cable connector (with socket and strain relief)

-F150N: 10-pin
-F151N: 10-pin
-F200N: 20-pin
-F201N: 20-pin
-F260N: 26-pin
For derails, see p. 47.

D-sub connector

(M2.6 mounting screws)
-D250N: 25-pin[Note10]
-D251N: 25-pin[Note10]

(4-40UNC mounting screws)
-D250NU: 25-pin[Note11]
-D251NU: 25-pin[Note11]
For derails, see p. 47.

■ Wiring connection specification

Blank

Packed wiring: Wired to match the specifications of the mounted valve.

-W

Double wiring: Wiring is always for the double solenoid, regardless of the specifications of the mounted valve.

■ Valve size

F15 Standard type

F15L Low-current type

■ Individual air supply and exhaust spacer, stop valve

Blank : No spacer and no stop valve
-NP6 : Single intake spacer (with ϕ6 joint for F15)
-NP8 : Single intake spacer (with ϕ8 joint for F15)
-NR6 : Single exhaust spacer (with ϕ6 joint for F15)
-NR8 : Single exhaust spacer (with ϕ8 joint for F15)
-STP : With stop valve
For details, see p. 27.

■ Back pressure prevention valve

Blank No back pressure prevention valve

-E1 With back pressure prevention valve[Note6]

■ Wiring specification

-PN

S type plug connector[Note4]

Valve size	Valve units	Manifold type	Wiring specification	Wiring connection specification	Station	Valve size	Valve specification	Manual override	Valve outlet type	Wiring specification	Back pressure prevention valve	Individual air supply and exhaust spacer, stop valve	Voltage
Manifold model					Mounting valve model								
F15M	2 ⋮ □ Note1	F FH	-F150N -F151N -F200N -F201N -F260N -D250N -D251N	Blank -W	stn. 1 ⋮ stn.□ Note2	F15 F15L	T0 TA T1 TB T2 TC T3 T4 T5	Blank -R Note3	-FJ Note10 -FJ6B Note10 -FJ5 Note10 -FMA Note10 -FJ6 Note10 -FMAH Note10 -FM Note10 -FMB Note10 -FMH Note11 -FMBH Note10 -FJ5A Note10 -FJ5B Note10 -FJ6A Note10	-PN Note4	Blank -E1 Note6	Blank -NP6 -NR8 -NP8 -STP -NR6	DC24V DC12V Note7 AC100V Note8 AC120V Note8
						F15	BP (for block-off plate) Note5					Blank -STP	

Notes: 1. For the maximum number of units, see the table for maximum number of valve units by wiring specification, on p. 53.
2. Valve mounting location is from the left, with the solenoid on top, and the 4(A), 2(B) ports side in front.
3. When the valve specification is **T1** or **T2**, the manual override lever is placed only on the A side.
4. Always enter **-PN**.
5. Caution should be exercised that the block-off plate wiring is always double wiring (allocated 2 control pins at 1 stn.), regardless of the wiring connection specification. For single wiring, see p. 177.
6. Not available with the individual exhaust spacer.
7. Not available in low-current type.
8. Not available in low-current type and tandem 3-port valves. In addition, only available when the wiring specification is a D-sub connector.
9. 3 port type is only supported by the **T0**, **T1**, and **T2** valve type.
10. Can be selected only when the manifold type is **F**.
11. Can be selected only when the manifold type is **FH**.

Remark: The external pilot type valve cannot be mounted on the F type manifold.

Gasket (gasket and exhaust valve)

F15Z - GS1

Valve size
15: 15 mm [0.591 in.] width

Block-off plate (block-off plate and 2 mounting screws)

F15BP

Valve size
15: 15 mm [0.591 in.] width

Back pressure prevention valve
(for monoblock type, 2 pieces)

F15Z - E1

Valve size
15: 15 mm [0.591 in.] width

Individual air supply and exhaust spacer (Spacer for non-plug-in type, gasket, exhaust valve, and 2 mounting screws)

F15Z - □

Valve size
15: 15 mm [0.591 in.] width

Specification
NP6: Single intake spacer (with ϕ6 joint for F15)
NP8: Single intake spacer (with ϕ8 joint for F15)
NR6: Single exhaust spacer (with ϕ6 joint for F15)
NR8: Single exhaust spacer (with ϕ8 joint for F15)

※ For details, see p. 25.

Muffler

KM - J□

Fitting size
6: Outer diameter ϕ 6 (for individual exhaust spacer)
8: Outer diameter ϕ 8 (for individual exhaust spacer)
(Sales unit: Set of 10 mufflers)

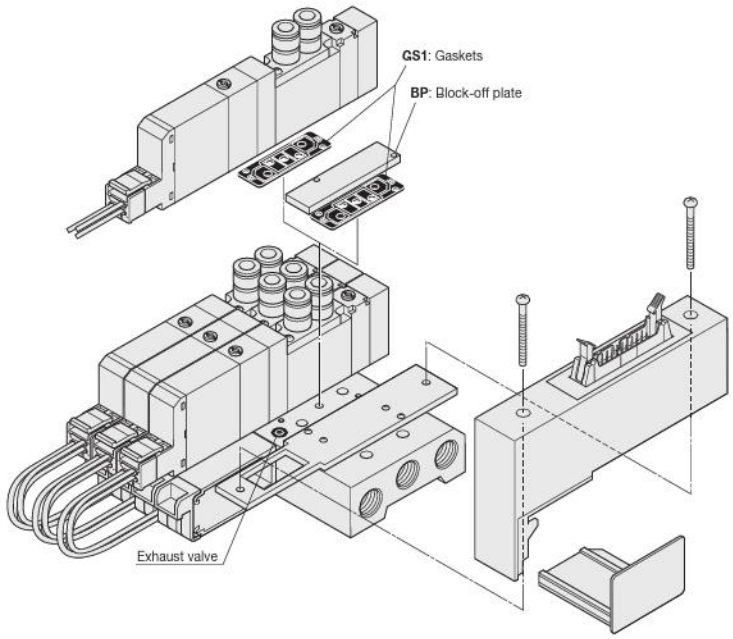

*The illustration is of the F10 Series.

Manifold Order Code Example
(4 units of F15 Series)

F15M4F-F201

stn.1～2	F15T0-FJ5-PN DC24V
stn.3	F15T2-FJ6-PN DC24V
stn.4	F15BP

Note: This order code example has no relationship to the illustration at upper right.

■ Table for maximum number of valve units by wiring specification

		Maximum number of units	
		Wiring connection specification	
Wiring specification	Max. outputs	Packed wiring (**Blank**)	Double wiring (**-W**)
F150N Flat cable (10P)	8	Varies depending on the number of mounted single solenoids, double solenoids, and block-off plates. The number of controlled solenoids should be designated as the maximum number of outputs or less.	4 units
F151N Flat cable (10P)	8		4 units
F200N Flat cable (20P)	16		8 units
F201N Flat cable (20P)	16		8 units
F260N Flat cable (26P)	20		10 units
D250N D-sub connector (25P)	16		8 units
D251N D-sub connector (25P)	20		10 units

Precautions for Order Codes

- **Orders for valves only**
  Place orders from "Single Valve Unit Order Codes" on p. 162.
  Select from valve outlet types **-FJ**, **-FJ5**, **-FJ6**, **-FM**, **-FJ5A**, **-FJ5B**, **-FJ6A**, **-FJ6B**, **-FMA** or **-FMB**.
- **Wiring connection specification**
  Blank (packed wiring): Wired to match the specifications of the mounted valve.
  -W (double wiring): Wiring is always for the double solenoid, regardless of the specifications of the mounted valve.

Caution

Caution should be exercised that the block-off plate wiring is always double wiring (allocated 2 control pins at 1 stn.), regardless of the wiring connection specification.
The block-off plate wiring can be made as wiring for a single solenoid. Add **-1W** to the end of the block-off plate order code in the case.
For details, consult us.

F15 Series PC Board Manifold A Type (Base Piping Type) Order Codes

■ **Valve size**

F15M

15 mm [0.591 in.] width

■ **Manifold outlet specification**

With dual use fitting blocks (base piping type)

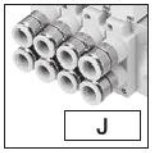

Outlet port fitting
F15: ϕ 6, ϕ 8

With female thread blocks (base piping type)

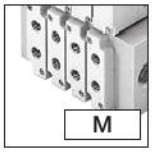

Outlet port female thread
F15: Rc1/8

With selectable fittings (base piping type)

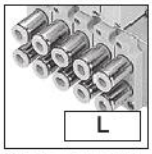

Outlet port should be selected in accordance with the manifold fitting specification.

■ **Pilot specification**

Blank

Internal pilot manifold

G

External pilot manifold

■ **Wiring specification (wiring block)**

Flat cable connector (with socket and strain relief)

-F200: 20-pin
-F201: 20-pin
For details, see p. 45.

■ **Wiring connection specification**

-S

Single wiring Note1

-W

Double wiring Note2

	Valve size	Valve units		Manifold outlet specification	Pilot specification	Wiring specification	Wiring connection specification
	Manifold model						
Single wiring typeNote1	F15M	6 8 10 12 14 16 Note3	AP	J M	Blank G	-F200 -F201	-S
				L	Blank G	-F200 -F201	-S
Double wiring typeNote2		6 8 Note3	AP	J M	Blank G	-F200 -F201	-W
				L	Blank G	-F200 -F201	-W

Notes: 1. Wiring is for the single solenoid only. Note that this is not the same as packed wiring. The mounting valves are limited to single solenoid only (**T0, T1** specifications). Therefore, even if the **T1** specification valve is switched over to a double solenoid, no power will be applied to the B side solenoid.
2. Wiring is always for the double solenoid, regardless of the specifications of the mounted valves.
3. In terms of wiring connection specifications, the number of units for single wiring is 6-16 (even numbers only) and for double wiring is 6 or 8.

Valve specification

T0 : 2-position, for single solenoid only
T1 : 2-position, single solenoid specification
T2 : 2-position, double solenoid specification
T3 : 3-position, closed center
T4 : 3-position, exhaust center[Note9]
T5 : 3-position, pressure center[Note9]
TA : Tandem 3-port (NC and NC)[Note10]
TB : Tandem 3-port (NO and NO)[Note10]
TC : Tandem 3-port (NC and NO)[Note10]

Manual override

Manual override button

Manual override lever[Note7]

Valve outlet type

With plate[Note8] (base piping type)

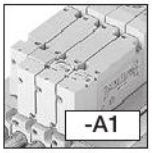

Manifold fitting specification

5-port specification

-J5	With single use fitting block (base piping type)	F15: ϕ 6
-J6	With single use fitting block (base piping type)	F15: ϕ 8
-M	With female thread block (base piping type)	F15: Rc1/8

3-port specification

-J5A	With single use fitting block, normally closed (NC) (base piping type)	F15: ϕ 6
-J5B	With single use fitting block, normally open (NO) (base piping type)	F15: ϕ 6
-J6A	With single use fitting block, normally closed (NC) (base piping type)	F15: ϕ 8
-J6B	With single use fitting block, normally open (NO) (base piping type)	F15: ϕ 8
-MA	With female thread block, normally closed (NC) (base piping type)	F15: Rc1/8
-MB	With female thread block, normally open (NO) (base piping type)	F15: Rc1/8

Caution: The 3-port specification is only available in the valve specification **T0**, **T1**, and **T2**.

Wiring specification

S type plug connector
Lead wire for PC board[Note8]

Valve size

F15	Standard type
F15L	Low-current type

Operation type

Blank
Internal pilot type[Note5]

G
External pilot type[Note6] (for positive pressure)

V
External pilot type[Note6] (for vacuum) ※
※ This is a vacuum valve.

Note: Cannot be mounted together with a valve for positive pressure.

Back pressure prevention valve

Blank	No back pressure prevention valve
-E1	With back pressure prevention valve[Note12]

Individual air supply and exhaust spacer, stop valve

Blank : No spacer and no stop valve
-NP6 : Single intake spacer (with ϕ6 joint for F15)
-NP8 : Single intake spacer (with ϕ8 joint for F15)
-NR6 : Single exhaust spacer (with ϕ6 joint for F15)
-NR8 : Single exhaust spacer (with ϕ8 joint for F15)
-STP : With stop valve[Note5]
For details, see p. 27.

Station	Valve size	Valve specification	Operation type	Manual override	Valve outlet type	Wiring specification	Manifold fitting specification	Back pressure prevention valve	Individual air supply and exhaust spacer, stop valve	Voltage
Mounting valve model										
stn. 1 : stn.□ Note4	F15 F15L	T0 T1 Note1	Blank[Note5] G[Note6] V[Note6]	Blank -R[Note7]	-A1 Note8	-PP Note8		Blank -E1[Note12]	Blank -NP6 -NP8 -NR6 -NR8 -STP Note5	DC24V DC12V[Note13]
	F15	BPC (for block-off plate)							Blank -STP[Note5]	
stn. 1 : stn.□ Note4	F15 F15L	T0 T1 Note1	Blank[Note5] G[Note6] V[Note6]	Blank -R[Note7]	-A1 Note8	-PP Note8	-J5 -J6 -M -J5A -J5B -J6A -J6B -MA -MB	Blank -E1[Note12]	Blank -NP6 -NP8 -NR6 -NR8 -STP Note5	DC24V DC12V[Note13]
	F15	BPC (for block-off plate)							Blank -STP[Note5]	
stn. 1 : stn.□ Note4	F15 F15L	T0 T1 T2 T3 T4[Note9] T5[Note9] TA[Note10] TB[Note10] TC[Note10]	Blank[Note5] G[Note6] V[Note6]	Blank -R[Note7]	-A1 Note8	-PP Note8 Note11		Blank -E1[Note12]	Blank -NP6 -NP8 -NR6 -NR8 -STP Note5	DC24V DC12V[Note13]
	F15	BPC (for block-off plate)							Blank -STP[Note5]	
stn. 1 : stn.□ Note4	F15 F15L	T0 T1 T2 T3 T4[Note9] T5[Note9] TA[Note10] TB[Note10] TC[Note10]	Blank[Note5] G[Note6] V[Note6]	Blank -R[Note7]	-A1 Note8	-PP Note8 Note11	-J5 -J6 -M -J5A -J5B -J6A -J6B -MA -MB	Blank -E1[Note12]	Blank -NP6 -NP8 -NR6 -NR8 -STP Note5	DC24V DC12V[Note13]
	F15	BPC (for block-off plate)							Blank -STP[Note5]	

Notes:
4. Valve mounting location is from the left, with the solenoid on top, and the 4(A), 2(B) ports side in front.
5. Cannot be mounted on the external pilot manifold.
6. Cannot be mounted on the internal pilot manifold.
7. When the valve specification is **T1** or **T2**, the manual override lever is placed only on the A side.
8. Always enter **-A1** and **-PP**.
9. Not available in the vacuum valves.
10. Not available in external pilot type and vacuum valves.
11. The lead wire on the solenoid B side (white) is not available in valve specification **T0**.
12. Not available with the individual exhaust spacer and vacuum valve.
13. Not available in low-current type.

Gasket (gasket and exhaust valve)

F15Z - GS1

Valve size
15: 15 mm [0.591 in.] width

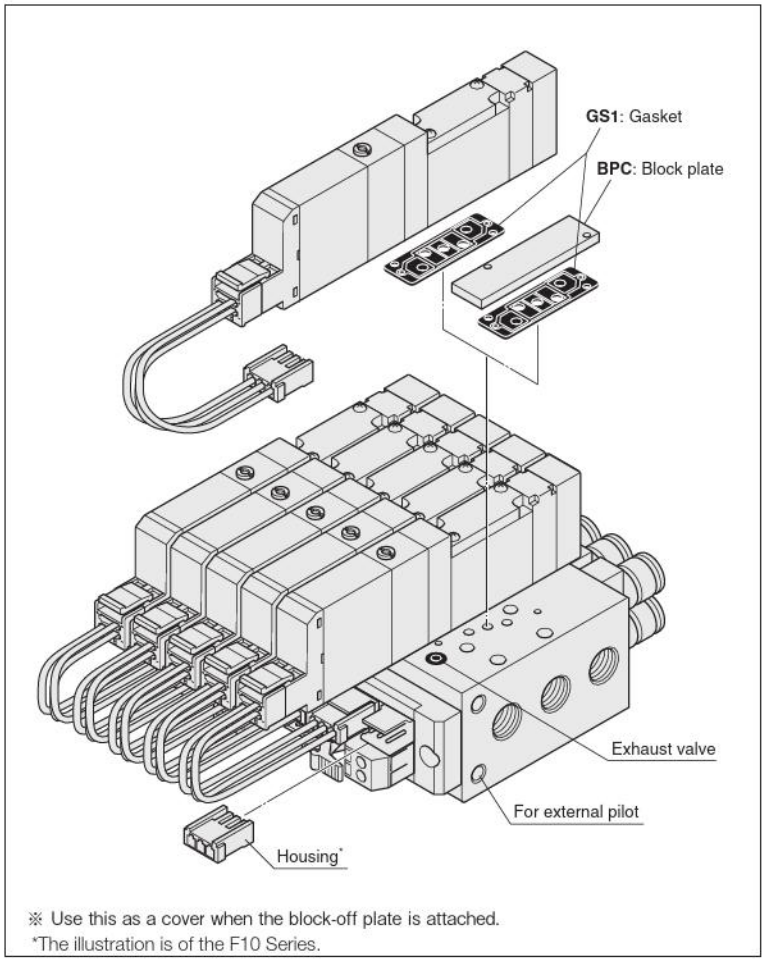

※ Use this as a cover when the block-off plate is attached.
*The illustration is of the F10 Series.

Block-off plate
(block-off plate, 2 mounting screws, and housing)

F15BPC

Valve size
15: 15 mm [0.591 in.] width

Connector-related order codes

JAZ□ - P15

Valve specification
Blank: For **T1, T2, T3, T4, T5, TA, TB, TC**
0: For **T0**

Connector specification
P15: For F15 series
Connector lead wire for PC board manifold

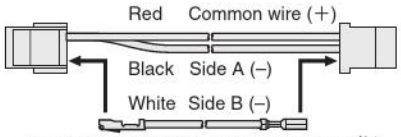

(Insert when using as a double solenoid)[Note]

Note: White lead wire is not available for **JAZ0-P□**.

Individual air supply and exhaust spacer
(Spacer for non-plug-in type, gasket, exhaust valve, and 2 mounting screws)

F15Z - □

Valve size
15: 15 mm [0.591 in.] width

Specification
NP6: Single intake spacer (with ϕ6 joint for F15)
NP8: Single intake spacer (with ϕ8 joint for F15)
NR6: Single exhaust spacer (with ϕ6 joint for F15)
NR8: Single exhaust spacer (with ϕ8 joint for F15)

※ For details, see p. 27.

Back pressure prevention valve
(for monoblock type, 2 pieces)

F15Z - E1

Valve size
15: 15 mm [0.591 in.] width

Manifold Order Code Example
(8 units of F15 Series)

F15M8APL-F201-W

stn.1～4	F15T0-A1-PP-J5 DC24V
stn.5～7	F15T2-A1-PP-J6 DC24V
stn.8	F15BPC-J6

Note: This order code example has no relationship to the illustration at upper right.

Muffler

KM - J□

Fitting size
6: Outer diameter ϕ6 (for individual exhaust spacer)
8: Outer diameter ϕ8 (for individual exhaust spacer)
(Sales unit: Set of 10 mufflers)

Precautions for Order Codes

● **Orders for valves only**

Enter the code [Valve size] [Valve specification] [Pilot specification] [Manual override] - [Valve outlet type] - **PP** [Voltage] to order.

When the lead wire for the PC board is not required, enter **-PN.**

● **Wiring connection specification**
-S (single wiring): Wiring for single solenoid only.
-W (double wiring): Wiring is always for the double solenoid, regardless of the specifications of the mounted valve.

F15 Series PC Board Manifold F Type (Direct Piping Type) Order Codes

■ Valve size

F15M

15 mm [0.591 in.] width

■ Manual override

Manual override button

Manual override lever Note5

■ Valve outlet type

5-port specification

-FJ	With dual use fitting block (direct piping type) F15: φ 6, φ 8
-FJ5	With single use fitting block (direct piping type) F15: φ 6
-FJ6	With single use fitting block (direct piping type) F15: φ 8
-FM	With female thread block (direct piping type) F15: Rc1/8

3-port specification

-FJ5A	With single use fitting block, normally closed (NC) (direct piping type) F15: φ 6
-FJ5B	With single use fitting block, normally open (NO) (direct piping type) F15: φ 6
-FJ6A	With single use fitting block, normally closed (NC) (direct piping type) F15: φ 8
-FJ6B	With single use fitting block, normally open (NO) (direct piping type) F15: φ 8
-FMA	With female thread block, normally closed (NC) (direct piping type) F15: Rc1/8
-FMB	With female thread block, normally open (NO) (direct piping type) F15: Rc1/8

Caution: The 3-port specifications are only available in the valve specification **T0**, **T1**, and **T2**.

■ Wiring specification (wiring block)

Flat cable connector (with socket and strain relief)

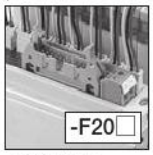

-F200: 20-pin
-F201: 20-pin
For details, see p. 90.

■ Wiring specification

S type plug connector
Lead wire for PC board

■ Individual air supply and exhaust spacer, stop valve

Blank : No spacer and no stop valve
-NP6 : Single intake spacer (with φ6 joint for F15)
-NP8 : Single intake spacer (with φ8 joint for F15)
-NR6 : Single exhaust spacer (with φ6 joint for F15)
-NR8 : Single exhaust spacer (with φ8 joint for F15)
-STP : With stop valve
For details, see p. 27.

■ Wiring connection specification

-S	Single wiring Note1
-W	Double wiring Note2

■ Valve size

F15	Standard type
F15L	Low-current type

■ Valve specification

T0 : 2-position, for single solenoid only
T1 : 2-position, single solenoid specification
T2 : 2-position, double solenoid specification
T3 : 3-position, closed center
T4 : 3-position, exhaust center
T5 : 3-position, pressure center
TA : Tandem 3-port (NC and NC)
TB : Tandem 3-port (NO and NO)
TC : Tandem 3-port (NC and NO)

■ Back pressure prevention valve

Blank	No back pressure prevention valve
-E1	With back pressure prevention valve Note8

	Valve size	Valve units	Wiring specification	Wiring connection specification	Station	Valve size	Valve specification	Manual override	Valve outlet type	Wiring specification	Back pressure prevention valve	Individual air supply and exhaust spacer, stop valve	Voltage
	Manifold model				Mounting valve model								
Single wiring type Note1	F15M	6 8 10 12 14 16 Note3	FP	-F200 -F201	-S	stn. 1 ⋮ stn.□ Note4	F15 F15L	T0 T1 Note1	Blank -R Note5	Note10 -FJ -FJ5B -FJ5 -FJ6A -FJ6 -FJ6B -FM -FMA -FJ5A -FMB	-PP Note6	Blank -E1 Note8	Blank -NP6 -NR8 -NP8 -STP -NR6	DC24V DC12V Note9
							F15	BPC (for block-off plate)					Blank -STP	
Double wiring type Note2		6 8 Note3	FP	-F200 -F201	-W	stn. 1 ⋮ stn.□ Note4	F15 F15L	T0 T3 TA T1 T4 TB T2 T5 TC	Blank -R Note5	Note10 -FJ -FJ5B -FJ5 -FJ6A -FJ6 -FJ6B -FM -FMA -FJ5A -FMB	-PP Note6 Note7	Blank -E1 Note8	Blank -NP6 -NR8 -NP8 -STP -NR6	DC24V DC12V Note9
							F15	BPC (for block-off plate)					Blank -STP	

Notes:
1. Wiring is for the single solenoid only. Note that this is not the same as packed wiring. The mounting valves are limited to single solenoid only (**T0**, **T1** specifications). Therefore, even if the **T1** specification valve is switched over to a double solenoid, no power will be applied to the B side solenoid.
2. Wiring is always for the double solenoid, regardless of the specifications of the mounted valve.
3. In terms of wiring connection specifications, the number of units for single wiring is 6-16 (even numbers only) and for double wiring is 6 or 8.
4. Valve mounting location is from the left, with the solenoid on top, and the 4(A), 2(B) ports side in front.
5. When the valve specification is **T1** or **T2**, the manual override lever is placed only on the A side.
6. Always enter **-PP**.
7. The lead wire on the solenoid B side (white) is not available in valve specification **T0**.
8. Not available with the individual exhaust spacer.
9. Not available in low-current type.
10. The 3-port specifications are only available in the valve specification **T0**, **T1**, and **T2**.

Gasket (gasket and exhaust valve)

F15Z - GS1

Valve size
15: 15 mm [0.591 in.] width

Block-off plate
(block-off plate, 2 mounting screws, and housing)

F15BPC

Valve size
15: 15 mm [0.591 in.] width

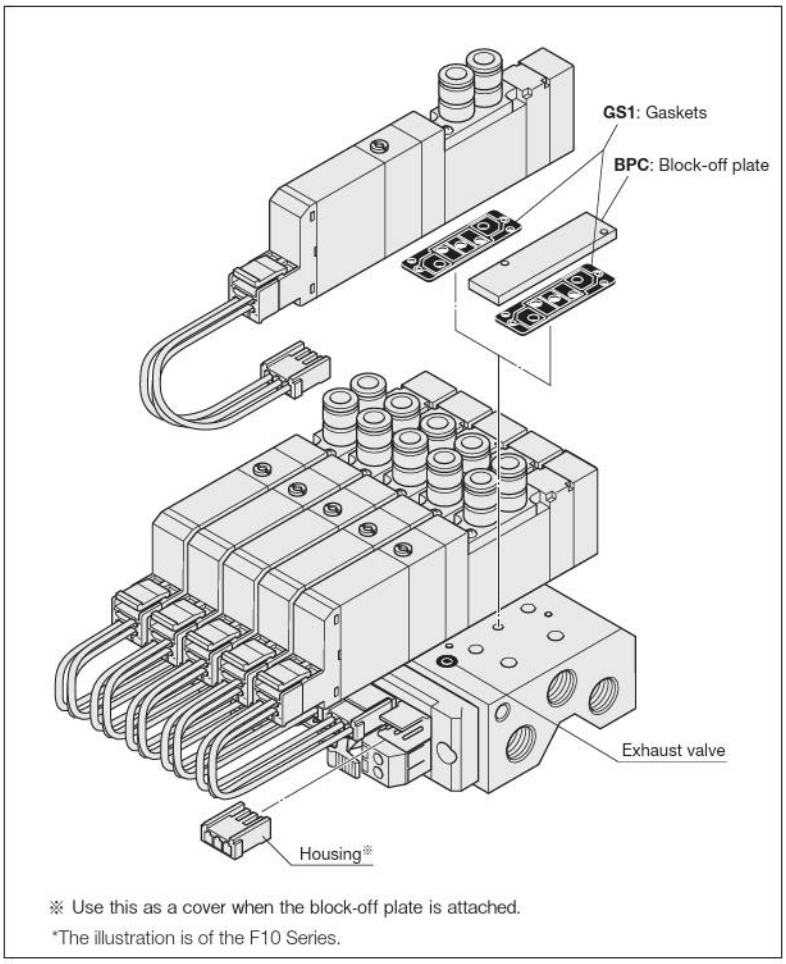

Connector-related order code

JAZ□ -P15

Valve specification
Blank: For **T1, T2, T3, T4, T5, TA, TB, TC**
0: For **T0**

Connector specification
P15: For F15 series
Connector lead wire for PC board manifold

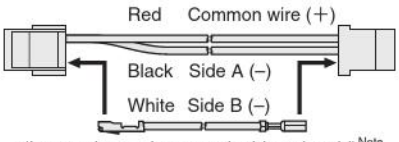

(Insert when using as a double solenoid)[Note]

Note: White lead wire is not available for **JAZ0-P□**.

Back pressure prevention valve
(for monoblock type, 2 pieces)

F15Z - E1

Valve size
15: 15 mm [0.591 in.] width

Individual air supply and exhaust spacer
(Spacer for non-plug-in type, gasket, exhaust valve, and 2 mounting screws)

F15Z - □

Valve size
15: 15 mm [0.591 in.] width

※ For details, see p. 27.

Specification
NP6: Single intake spacer (with ϕ6 joint for F15)
NP8: Single intake spacer (with ϕ8 joint for F15)
NR6: Single exhaust spacer (with ϕ6 joint for F15)
NR8: Single exhaust spacer (with ϕ8 joint for F15)

Manifold Order Code Example
(8 units of F15 Series)

F15M8FP-F201-W

stn.1～4	F15T0-FJ5-PP DC24V
stn.5～7	F15T2-FJ6-PP DC24V
stn.8	F15BPC

Note: This order code example has no relationship to the illustration at upper right.

Muffler

KM - J□

Fitting size
6: Outer diameter ϕ6 (for individual exhaust spacer)
8: Outer diameter ϕ8 (for individual exhaust spacer)
(Sales unit: Set of 10 mufflers)

Precautions for Order Codes

● **Orders for valves only**

Enter the code [Valve size] [Valve specification] [Manual override] - [Valve outlet type] - **PP** [Voltage] to order.

When the lead wire for the PC board is not required, enter **-PN.**

● **Wiring connection specification**
-S (single wiring): Wiring for single solenoid only.
-W (double wiring): Wiring is always for the double solenoid, regardless of the specifications of the mounted valve.

F15 Series Split Manifold Non-Plug-in Type Order Codes

*The illustration is of the F10 series.

■ Valve size

F15M 15 mm [0.591 in.] width

■ Manifold outlet specification

With dual use fitting blocks (base piping type)

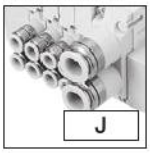

Outlet port fitting
F15: ϕ 6, ϕ 8

With selectable fittings (base piping type)

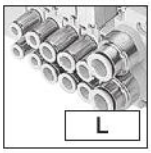

Outlet port should be selected in accordance with the manifold fitting specification.

With female thread blocks (base piping type)

Outlet port female thread
F15: Rc 1/8

With plates (direct piping type)

■ Pilot specification

Blank
Internal pilot manifold

G
External pilot manifold

■ Piping block specification (air supply and exhaust)

Fitting block
-JR : Dual use fitting, right-side mounting
-JL : Dual use fitting, left-side mounting
-JD : Dual use fitting, both-side mounting
Fitting size (1(P), 3, 5(R) ports), ϕ 8, ϕ 10

Female thread block
-MR : Female thread, right-side mounting
-ML : Female thread, left-side mounting
-MD : Female thread, both-side mounting
Female thread size (1(P), 3, 5(R) ports), Rc1/4

Female thread block
-MRH : Female thread, right-side mounting Note15
-MLH : Female thread, left-side mounting Note15
-MDH : Female thread, both-side mounting Note15
Female thread size (1(P), 3, 5(R) ports), NPT1/4

Single use fitting block
-J5R : Single use fitting, right-side mounting
-J5L : Single use fitting, left-side mounting
-J5D : Single use fitting, both-side mounting
Fitting size (1(P), 3, 5(R) ports), ϕ 8
-J6R : Single use fitting, right-side mounting
-J6L : Single use fitting, left-side mounting
-J6D : Single use fitting, both-side mounting
Fitting size (1(P), 3, 5(R) ports), ϕ 10

■ Valve size

F15 Standard type

F15L Low-current type

	Valve size	Valve units	Manifold type	Manifold outlet specification	Pilot specification	Piping block specification
	Manifold model					
Base piping type	F15M	2 : 20	N	J M	Blank G	-JR -J5R -JL -J6R -JD -J5L -MR -J6L -ML -J5D -MD -J6D
Base piping type selectable fitting	F15M	2 : 20	N NH	L	Blank G	-JR Note14 -MDH Note15 -JL Note14 -J5R Note14 -JD Note14 -J6R Note14 -MR Note14 -J5L Note14 -ML Note14 -J6L Note14 -MD Note14 -J5D Note14 -MRH Note15 -J6D Note14 -MLH Note15
Direct piping type	F15M	2 : 20	N NH	Blank	Blank G	-JR Note14 -MDH Note15 -JL Note14 -J5R Note14 -JD Note14 -J6R Note14 -MR Note14 -J5L Note14 -ML Note14 -J6L Note14 -MD Note14 -J5D Note14 -MRH Note15 -J6D Note14 -MLH Note15

Remark: Negative common specifications are also available as made to order products (add **-129W** to the ends of the valve and manifold model order codes). For details, consult us.

Valve specification

T0 : 2-position, for single solenoid only
T1 : 2-position, single solenoid specification
T2 : 2-position, double solenoid specification
T3 : 3-position, closed center
T4 : 3-position, exhaust center
T5 : 3-position, pressure center
TA : Tandem 3-port (NC and NC)Note7
TB : Tandem 3-port (NO and NO)Note7
TC : Tandem 3-port (NC and NO)Note7

Operation type

Blank
Internal pilot typeNote5

G
External pilot typeNote6
(for positive pressure)
※ No vacuum valve can be mounted.

Manual override

Manual override button

Manual override leverNote2

Valve outlet type

-A1 With plateNote3 (base piping type)

5-port specification

-FJ With dual use fitting blockNote14 (direct piping type) F15: ϕ 6, ϕ 8

-FJ5 With single use fitting blockNote14 (direct piping type) F15: ϕ 6

-FJ6 With single use fitting blockNote14 (direct piping type) F15: ϕ 8

-FM With female thread blockNote14 (direct piping type) F15: Rc1/8

3-port specification

-FJ5A With single use fitting block, normally closed (NC)Note14 (direct piping type) F15: ϕ 6

-FJ5B With single use fitting block, normally open (NO)Note14 (direct piping type) F15: ϕ 6

-FJ6A With single use fitting block, normally closed (NC)Note14 (direct piping type) F15: ϕ 8

-FJ6B With single use fitting block, normally open (NO)Note14 (direct piping type) F15: ϕ 8

-FMA With female thread block, normally closed (NC)Note14 (direct piping type) F15: Rc1/8

-FMAH With female thread block, normally closed (NC)Note15 (direct piping type) F15: NPT1/8

-FMB With female thread block, normally open (NO)Note14 (direct piping type) F15: Rc1/8

-FMBH With female thread block, normally open (NO)Note15 (direct piping type) F15: NPT1/8

Caution: The 3-port specifications are only available in the valve specification **T0**, **T1**, and **T2**.

Wiring specification Note11

S type plug connector
Without connector

S type plug connector
Lead wire 300 mm [11.8 in.]

S type plug connector
Lead wire 3000 mm [118 in.]

Pre-wired positive common terminal
S type plug connector
Lead wire 300 mm [11.8 in.]

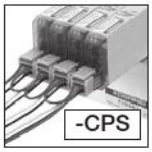

Pre-wired positive common terminal
S type plug connector
Lead wire 3000 mm [118 in.]

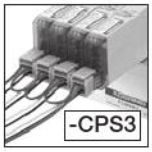

Manifold fitting specification

5-port specification

-J5 With single use fitting block (base piping type) F15: ϕ 6

-J6 With single use fitting block (base piping type) F15: ϕ 8

-M With female thread block (base piping type) F15: Rc1/8

-MH With female thread blockNote14 (base piping type) F15: NPT1/8

3-port specification

-J5A With single use fitting block, normally closed (NC) (base piping type) F15: ϕ 6

-J5B With single use fitting block, normally open (NO) (base piping type) F15: ϕ 6

-J6A With single use fitting block, normally closed (NC) (base piping type) F15: ϕ 8

-J6B With single use fitting block, normally open (NO) (base piping type) F15: ϕ 8

-MA With female thread block, normally closed (NC) (base piping type) F15: Rc1/8

-MAH With female thread block, normally closed (NC)Note15 (base piping type) F15: NPT1/8

-MB With female thread block, normally open (NO)Note14 (base piping type) F15: Rc1/8

-MBH With female thread block, normally open (NO)Note15 (base piping type) F15: NPT1/8

Caution: The 3-port specifications are only available in the valve specification **T0**, **T1**, and **T2**.

Port isolator

Blank : No port isolator
-SP : For 1(P) portNote4
-SR : For 3(R2), 5(R1) portsNote4
-SA : For 1(P), 3(R2), and 5(R1) portsNote4

Back pressure prevention valve

Blank
No back pressure prevention valve

-E2
With back pressure prevention valveNote8

Individual air supply and exhaust spacer

Blank : No spacer
-NP6 : Single intake spacer (with ϕ 6 joint for F15)
-NP8 : Single intake spacer (with ϕ 8 joint for F15)
-NR6 : Single exhaust spacer (with ϕ 6 joint for F15)
-NR8 : Single exhaust spacer (with ϕ 8 joint for F15)

For details, see p. 27.

Station	Valve size	Valve specifications	Operation type	IP Specifications	Manual override	Valve outlet type	Wiring specification	Manifold fitting specification	Back pressure prevention valve	Individual air supply and exhaust spacer	Port isolator	Voltage
Mounting valve model												
stn. 1 : stn.□ Note1	F15 F15L	T0 TANote7 T1 TBNote7 T2 TCNote7 T3 T4 T5	BlankNote5 GNote6	Blank -P Note12	Blank -RNote2	-A1Note3	-PN -PS Note11 -PS3 -CPS -CPS3	Blank -E2Note8	Blank -NP6 -NP8 -NR6 -NR8	Blank -SPNote4 -SRNote4 -SANote4	DC24V DC12VNote9 AC100VNote10 AC120VNote10
	F15	BPN (for block-off plate)										
stn. 1 : stn.□ Note1	F15 F15L	T0 TANote7 T1 TBNote7 T2 TCNote7 T3 T4 T5	BlankNote5 GNote6	Blank -P Note12	Blank -RNote2	-A1Note3	-PN -PS Note11 -PS3 -CPS -CPS3	-J5Note14 -J6Note14 -MNote14 -MHNote14 -J5ANote14 -J5BNote14 -J6ANote14 -J6BNote14 -MANote14 -MAHNote15 -MBNote14 -MBHNote15	Blank -E2Note8	Blank -NP6 -NP8 -NR6 -NR8	Blank -SPNote4 -SRNote4 -SANote4	DC24V DC12VNote9 AC100VNote10 AC120VNote10
	F15	BPN (for block-off plate)										
stn. 1 : stn.□ Note1	F15 F15L	T0 TANote7 T1 TBNote7 T2 TCNote7 T3 T4 T5	BlankNote5 GNote6	Blank -P Note12	Blank -RNote2	Note13 -FJ -FJ5 -FJ6 -FM -FJ5A -FJ5B -FJ6A -FJ6B -FMA -FMB	-PN -PS Note11 -PS3 -CPS -CPS3	Blank -E2Note8	Blank -NP6 -NP8 -NR6 -NR8	Blank -SPNote4 -SRNote4 -SANote4	DC24V DC12VNote9 AC100VNote10 AC120VNote10
	F15	BPN (for block-off plate)										

Notes: 1. Valve mounting location is from the left, with the solenoid on top, and the 4(A), 2(B) ports side in front.
2. When the valve specification is **T1** or **T2**, the manual override lever is placed only on the A side.
3. When selecting **J**, **M**, or **L** (base piping type) for the manifold outlet specification, always enter **-A1** (with plate) for the valve outlet type.
4. Port isolators can be installed only when piping blocks are mounted on both sides. In addition, only 1 port isolator can be mounted in 1 manifold for **-SA**, or 1 each port isolator for **-SP** and **-SR** for a total of 2 locations. When shipping, the designated port isolators are mounted between the designated station and the station to its immediate left (the next smaller stn. No.).
5. Cannot be mounted on the external pilot manifold.
6. Cannot be mounted on the internal pilot manifold.
7. Not available in external pilot type.
8. Not available with the individual exhaust spacer.
9. Not available in low-current type.
10. Not available in low-current type and tandem 3-port valves.
11. Wiring specifications of **-P** □ and **-CP** □ cannot be mounted together.
12. The IP65 protective structure around an electrical device that prevents the infiltration of solid foreign material and water from outside.
13. The 3-port specifications are only available in the valve specification **T0**, **T1**, and **T2**.
14. Can be selected only when the manifold type is **N**.
15. Can be selected only when the manifold type is **NH**.

Parts for manifold

F15Z - □

Valve size
15: 15 mm [0.591 in.] width

Parts content
GS2 : Gasket (gasket and exhaust valve)
SP : Port isolator (for 1(P) port)
SR : Port isolator (for 3(R2), 5(R1) ports)
SA : Port isolator (for 1(P), 3(R2), 5(R1) ports)

Block-off plate (block-off plate, 2 mounting screws, and plug)

F15BP N

Valve size
15: 15 mm [0.591 in.] width

For non-plug-in type

Connector-related order codes

※ For details, see p. 22.

JAZ □ - □

300 mm = 11.8 in.
1500 mm = 59 in.
3000 mm = 118 in.

Valve specification
Blank: For **T1, T2, T3, T4, T5, TA, TB, TC**
0: For **T0**

Connector specification
CP : Connector, lead wire length 300 mm
CP3 : Connector, lead wire length 3000 mm
CPN : Connector without lead wire (short bar, contacts included)
PA : Positive common A type, lead wire length 300 mm ※
PA3 : Positive common A type, lead wire length 3000 mm ※
PB : Positive common B type, lead wire length 300 mm ※
PB3 : Positive common B type, lead wire length 3000 mm ※
PC : Positive common C type, lead wire length 300 mm ※
PC3 : Positive common C type, lead wire length 3000 mm ※

FZ - □

Valve specification
For **T1, T2, T3, T4, T5, TA, TB, TC**

Connector specification
CC1.5 : Cabtyre cable, length 1500 mm ※
CC3 : Cabtyre cable, length 3000 mm ※

● Common connector assembly

A Type: JAZ-PA□※

Red Common wire (+)
Black A side (–)
White B side (–) (Insert when using as double solenoid) Note

B Type: JAZ-PB□※

Red Common wire (+)
Black A side (–)
White B side (–) (Insert when using as double solenoid) Note

C Type: JAZ-PC□※

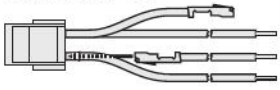

Red Common wire (+)
Black A side (–)
White B side (–) (Insert when using as double solenoid) Note
Red Common wire (+)

※ Lead wire length **Blank:** 300 mm [11.8 in.] **3:** 3000 mm [118 in.]
Note: White lead wire is not available with **JAZ0-P□□**.

Remark: Connector for negative common type also available. For details, see p. 22.

Valve base assembly (valve base and gasket)

F15Z □ - □

Valve size
15: 15 mm [0.591 in.] width

Pilot specification
Blank : Internal pilot
G : External pilot

Piping specification
VJ : Dual use fitting valve base
VJ5 : Single use fitting valve base F15: ϕ 6
VJ6 : Single use fitting valve base F15: ϕ8
VJ5A : 3-port specification normally closed, single use fitting valve base F15: ϕ 6
VJ5B : 3-port specification normally open, single use fitting valve base F15: ϕ 6
VJ6A : 3-port specification normally closed, single use fitting valve base F15: ϕ8
VJ6B : 3-port specification normally open, single use fitting valve base F15: ϕ8
VM : Female thread valve base
VMA : 3-port specification normally closed, female thread valve base
VMB : 3-port specification normally open, female thread valve base
VP : Valve base plate

Piping block assembly

F15Z □ - □

Valve size
15: 15 mm [0.591 in.] width

Piping specification
PJ : Dual use fitting piping block
PJ5 : Single use fitting piping block ϕ8
PJ6 : Single use fitting piping block ϕ10
PM : Female thread piping block
PMH : Female thread piping block NPT1/4

Pilot specification
Blank : Internal pilot
G : External pilot

End blocks (one set of left and right)

F15Z □ - E

Valve size
15: 15 mm [0.591 in.] width

Pilot specification
Blank : Internal pilot
G : External pilot

Back pressure prevention valve

(2 pieces for split type, with dedicated gasket)

F15Z - E2

Valve size
15: 15 mm [0.591 in.] width

Individual air supply and exhaust spacer

(Spacer for non-plug-in type, gasket, exhaust valve, and 2 mounting screws)

F15Z - □

Valve size
15: 15 mm [0.591 in.] width

Specification
NP6: Single intake spacer (with ϕ 6 joint for F15)
NP8: Single intake spacer (with ϕ 8 joint for F15)
NR6: Single exhaust spacer (with ϕ 6 joint for F15)
NR8: Single exhaust spacer (with ϕ 8 joint for F15)

※ For details, see p. 27.

Muffler

KM - J □

Fitting size
6: Outer diameter ϕ6 (for individual exhaust spacer)
8: Outer diameter ϕ8 (for individual exhaust spacer)
10: Outer diameter ϕ10
(Sales unit: Set of 10 mufflers)

DIN rail

DIN - □ (Unit: 1)

Rail length
125: 125mm [4.921 in.]
⋮ (25 mm [0.984 in.] pitch)
525: 525mm [20.669 in.]

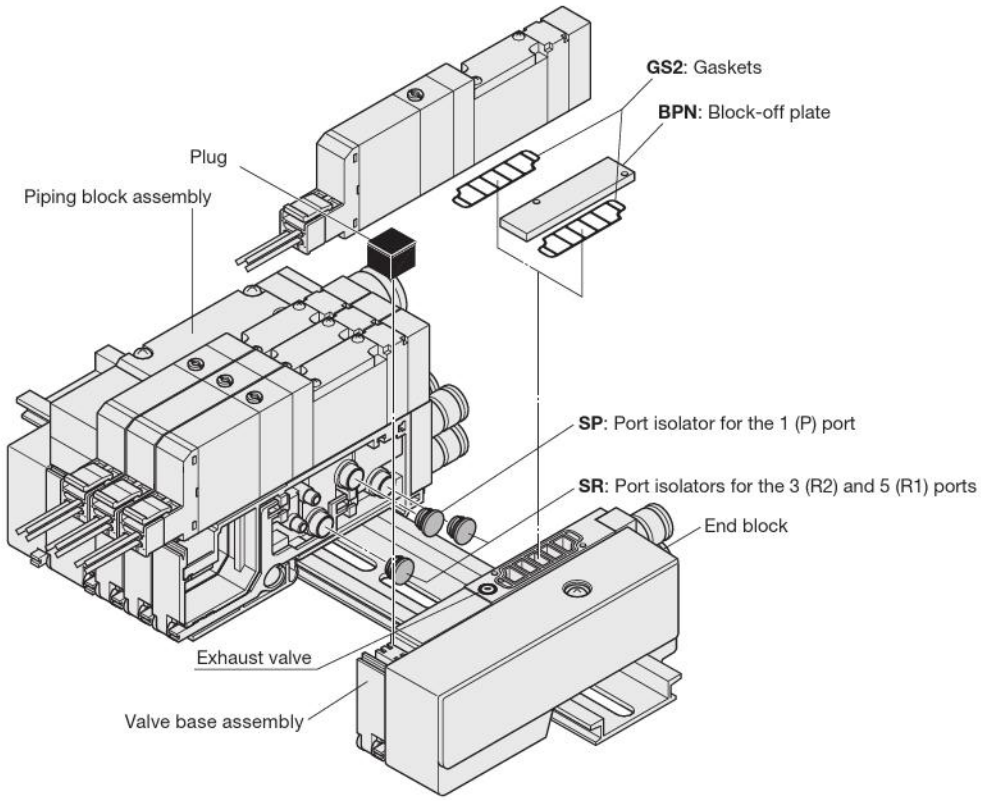

※ Illustration shows the F10 series.

Manifold Order Code Example

(4 units of F15 Series)

F15M4NL-J5R

stn.1～2	F15T0-A1-PS-J5 DC24V
stn.3	F15T2-A1-PS-J6 DC24V
stn.4	F15BPN-J6

Note: This order code example has no relationship to the illustration above.

Precautions for Order Codes

● **Orders for valves only**

Place orders from "Single Valve Unit Order Codes" on p. 162.

However, **Blank, A2, F3, F4, F5, F6, F4A, F4B, F5A, F5B, F6A,** and **F6B** cannot be selected for the valve outlet type. And for the wiring specification, **Blank, PL**, and **PL3** cannot be selected. In addition, for common terminal wiring connections, separately order the common connector assemblies listed on the previous page.

Connector-related order codes

JAZ - P - □ (for double use only)

Valve specification
For **T2, T3, T4, T5, TA, TB,** or **TC**

Connector specification

CP : Connector, lead wire length 300 mm [11.8 in.] (black, red, white, for total of 3 lead wires)
CP3 : Connector, lead wire length 3000 mm [118 in.] (black, red, white, for total of 3 lead wires)
PA : Positive common A type, lead wire length 300 mm [11.8 in.]※
PA3 : Positive common A type, lead wire length 3000 mm [118 in.]※
PB : Positive common B type, lead wire length 300 mm [11.8 in.]※
PB3 : Positive common B type, lead wire length 3000 mm [118 in.]※
PC : Positive common C type, lead wire length 300 mm [11.8 in.]※
PC3 : Positive common C type, lead wire length 3000 mm [118 in.]※
※A common connector assembly.

JAZ0 - P - □ (for single use only)

Valve specification
For **T0/T1**

Connector specification

CP : Connector, lead wire length 300 mm [11.8 in.] (black, red, for total of 2 lead wires)
CP3 : Connector, lead wire length 3000 mm [118 in.] (black, red, for total of 2 lead wires)
PA : Positive common A type, lead wire length 300 mm [11.8 in.]※
PA3 : Positive common A type, lead wire length 3000 mm [118 in.]※
PB : Positive common B type, lead wire length 300 mm [11.8 in.]※
PB3 : Positive common B type, lead wire length 3000 mm [118 in.]※
PC : Positive common C type, lead wire length 300 mm [11.8 in.] ※
PC3 : Positive common C type, lead wire length 3000 mm [118 in.]※
※A common connector assembly.

Notes:
1. When the valve specification is **T1**, select the **JAZ0-P-** □ single dedicated type.
2. When switching between the single and double type (**T1**/**T2**), purchase and use a dedicated connector for single or double use (the number of seal holes in the lead wire differs for the single and double type).
3. There is no white lead wire for the **JAZ0-P-** □ .
4. It is necessary to disassemble the connector to add a common connector assembly. Contact your nearest KOGANEI sales office.
5. For information on use in locations/atmospheres subject to substances other than water, such as organic solvents, cutting oil, or reagents, contact your nearest KOGANEI sales office.
6. For information on replacing the waterproof seal, contact your nearest KOGANEI sales office.

F15 Series Split Manifold Plug-in Type Order Codes

*The illustration is of the F10 series.

■ Manifold outlet specification

With dual use fitting blocks (base piping type)

Outlet port fitting
F15: ϕ 6, ϕ8

With selectable fittings (base piping type)

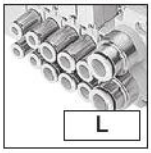

Outlet port should be selected in accordance with the manifold fitting specification.

With female thread blocks (base piping type)

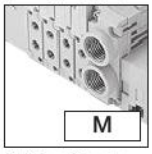

Outlet port female thread
F15: Rc1/8

With plates (direct piping type)

■ Valve size

F15M 15 mm [0.591 in.] width

■ Pilot specification

Blank
Internal pilot manifold

G
External pilot manifold

■ Piping block specification (air supply and exhaust)

Fitting block
-JR : Dual use fitting, right-side mounting[Note15]
-JL : Dual use fitting, left-side mounting[Note15]
-JD : Dual use fitting, both-side mounting[Note15]
Fitting size (1(P), 3, 5(R) ports), ϕ8, ϕ10

Female thread block
-MR : Female thread, right-side mounting[Note15]
-ML : Female thread, left-side mounting[Note15]
-MD : Female thread, both-side mounting[Note15]
Female thread size (1(P), 3, 5(R) ports), Rc1/4

Female thread block
-MRH : Female thread, right-side mounting[Note16]
-MLH : Female thread, left-side mounting[Note16]
-MDH : Female thread, both-side mounting[Note16]
Female thread size (1(P), 3, 5(R) ports), NPT1/4

Single size fitting block
-J5R : Single use fitting, right-side mounting[Note15]
-J5L : Single use fitting, left-side mounting[Note15]
-J5D : Single use fitting, both-side mounting[Note15]
Fitting size (1(P), 3, 5(R) ports), ϕ8
-J6R : Single use fitting, right-side mounting[Note15]
-J6L : Single use fitting, left-side mounting[Note15]
-J6D : Single use fitting, both-side mounting[Note15]
Fitting size (1(P), 3, 5(R) ports), ϕ10

■ Wiring specification (wiring block)

Flat cable connector (with socket and strain relief)

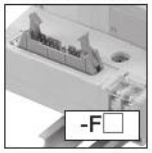

<Connector top surface wiring>
-F100 : 10-pin
-F100N: 10-pin without power terminal
-F101 : 10-pin
-F101N: 10-pin without power terminal
-F200 : 20-pin
-F200N: 20-pin without power terminal
-F201 : 20-pin
-F201N: 20-pin without power terminal
-F260 : 26-pin
-F260N: 26-pin without power terminal

<Connector side surface wiring>
-F100E : 10-pin
-F100EN : 10-pin without power terminal
-F101E : 10-pin
-F101EN : 10-pin without power terminal
-F200E : 20-pin
-F200EN : 20-pin without power terminal
-F201E : 20-pin
-F201EN : 20-pin without power terminal
-F260E : 26-pin
-F260EN : 26-pin without power terminal

For details, see p. 47.

D-sub connector

<Connector top surface wiring>
(M2.6 mounting screws)
-D250 : 25-pin[Note15]
-D250N : 25-pin without power terminal[Note15]
-D251 : 25-pin[Note15]
-D251N : 25-pin without power terminal[Note15]
(4-40 UNC mounting screws)
-D250U : 25-pin[Note16]
-D251U : 25-pin[Note16]
-D370NU : 37-pin without power terminal[Note16]

<Connector side surface wiring>
(M2.6 mounting screws)
-D250E : 25-pin[Note15]
-D250EN : 25-pin without power terminal[Note15]
-D251E : 25-pin[Note15]
-D251EN : 25-pin without power terminal[Note15]
(4-40 UNC mounting screws)
-D250EU : 25-pin[Note15]
-D251EU : 25-pin[Note15]

For details, see p. 47.

Terminal block (19 terminals, M3 screws)

Also can provide the terminal block with cover.[Note4]

For details, see p. 47.

■ Wiring connection specification

Blank
Packed wiring:
Wiring is made in accordance with the mounted valve specifications.

-W
Double wiring:
Wiring is always for the double solenoid, regardless of the specifications of the mounted valve.

■ Wiring position (wiring block)

Blank : Left-side mounting
-R : Right-side mounting

■ Valve size

F15 Standard type
F15L Low-current type

	Valve size	Valve units	Manifold type	Manifold outlet specification	Pilot specification	Piping block specification	Wiring specification	Wiring connection specification	Wiring position	Voltage
	Manifold model									
Base piping type	F15M	2 : □ Note1	P	J M	Blank G	-JR -J5R -JL -J6R -JD -J5L -MR -J6L -ML -J5D -MD -J6D	-F100 -F201 -D251 -F200E -D250E -F100N -F201N -D251N -F200EN -D250EN -F101 -F260 -F100E -F201E -D251E -F101N -F260N -F100EN -F201EN -D251EN -F200 -D250 -F101E -F260E -T200 -F200N -D250N -F101EN -F260EN	Blank -W	Blank -R	DC24V DC12V[Note2] AC100V[Note3] AC120V[Note3]
Base piping type selectable fitting			P	L	Blank G	-JR[Note15] -MDH[Note16] -JL[Note15] -J5R[Note15] -JD[Note15] -J6R[Note15] -MR[Note15] -J5L[Note15] -ML[Note15] -J6L[Note15] -MD[Note15] -J5D[Note15] -MRH[Note16] -J6D[Note15] -MLH[Note16]	-F100 -F201N -D250U[Note16] -F200E -D250EN[Note15] -F100N -F260 -D251U[Note16] -F200EN -D251E[Note15] -F101 -F260N -D370NU[Note16] -F201E -D251EN[Note15] -F101N -D250[Note15] -F100E -F201EN -D250EU[Note16] -F200 -D250N[Note15] -F100EN -F260E -D251EU[Note16] -F200N -D251[Note15] -F101E -F260EN -T200 -F201 -D251N[Note15] -F101EN -D250E[Note15]	Blank -W	Blank -R	DC24V DC12V[Note2] AC100V[Note3] AC120V[Note3]
Direct piping type			PH	Blank	Blank G	-JR[Note15] -MDH[Note16] -JL[Note15] -J5R[Note15] -JD[Note15] -J6R[Note15] -MR[Note15] -J5L[Note15] -ML[Note15] -J6L[Note15] -MD[Note15] -J5D[Note15] -MRH[Note16] -J6D[Note15] -MLH[Note16]	-F100 -F201N -D250U[Note16] -F200E -D250EN[Note15] -F100N -F260 -D251U[Note16] -F200EN -D251E[Note15] -F101 -F260N -D370NU[Note16] -F201E -D251EN[Note15] -F101N -D250[Note15] -F100E -F201EN -D250EU[Note16] -F200 -D250N[Note15] -F100EN -F260E -D251EU[Note16] -F200N -D251[Note15] -F101E -F260EN -T200 -F201 -D251N[Note15] -F101EN -D250E[Note15]	Blank -W	Blank -R	DC24V DC12V[Note2] AC100V[Note3] AC120V[Note3]

Notes: 1. For the maximum number of units, see the table for maximum number of valve units by wiring specification, on p. 192.
2. Not available in low-current type.
3. AC100V, AC120V is available only for the **-D250□**, **-D251□** (D-sub connector) and **-T200** (terminal block) wiring specifications. In addition, not available in low-current type and tandem 3-port valves.
4. The terminal block with cover is also available as a made to order product (add **-139W** to the end of the manifold model order code). For details, consult us.

Remark: Negative common specifications are also available as made to order products (add **-129W** to the ends of the valve and manifold model order codes). For details, consult us.

Valve specification

T0 : 2-position, for single solenoid only
T1 : 2-position, single solenoid specification
T2 : 2-position, double solenoid specification
T3 : 3-position, closed center
T4 : 3-position, exhaust center
T5 : 3-position, pressure center
TA : Tandem 3-port (NC and NC)[Note12]
TB : Tandem 3-port (NO and NO)[Note12]
TC : Tandem 3-port (NC and NO)[Note12]

Operation type

Blank
Internal pilot type[Note10]

G
External pilot type[Note11]
(for positive pressure)
※ No vacuum valve can be mounted.

Manual override

Manual override button

Manual override lever[Note8]

Valve outlet type

-A1 With plate[Note6] (base piping type)

5-port specification

-FJ With dual use fitting block[Note15] (direct piping type) F15: ϕ 6, ϕ 8

-FJ5 With single use fitting block[Note15] (direct piping type) F15: ϕ 6

-FJ6 With single use fitting block[Note15] (direct piping type) F15: ϕ 8

-FM With female thread block[Note15] (direct piping type) F15: Rc1/8

-FMH With female thread block[Note16] (direct piping type) F15: NPT1/8

3-port specification

-FJ5A With single use fitting block, normally closed (NC)[Note15] (direct piping type) F15: ϕ 6

-FJ5B With single use fitting block, normally open (NO)[Note15] (direct piping type) F15: ϕ 6

-FJ6A With single use fitting block, normally closed (NC)[Note15] (direct piping type) F15: ϕ 8

-FJ6B With single use fitting block, normally open (NO)[Note15] (direct piping type) F15: ϕ 8

-FMA With female thread block, normally closed (NC)[Note15] (direct piping type) F15: Rc1/8

-FMAH With female thread block, normally closed (NC)[Note16] (direct piping type) F15: NPT1/8

-FMB With female thread block, normally open (NO)[Note15] (direct piping type) F15: Rc1/8

-FMBH With female thread block, normally open (NO)[Note15] (direct piping type) F15: NPT1/8

Caution: The 3-port specifications are only available in the valve specification **T0**, **T1**, and **T2**.

Manifold fitting specification

5-port specification

-J5 With single use fitting block (base piping type) F15: ϕ 6

-J6 With single use fitting block (base piping type) F15: ϕ 8

-M With female thread block (base piping type) F15: Rc1/8

-MH With female thread[Note16] block (base piping type) F15: NPT1/8

3-port specification

-J5A With single use fitting block, normally closed (NC) (base piping type) F15: ϕ 6

-J5B With single use fitting block, normally open (NO) (base piping type) F15: ϕ 6

-J6A With single use fitting block, normally closed (NC) (base piping type) F15: ϕ 8

-J6B With single use fitting block, normally open (NO) (base piping type) F15: ϕ 8

-MA With female thread block, normally closed (NC) (base piping type) F15: Rc1/8

-MAH With female thread block, normally closed (NC)[Note16] (base piping type) F15: 10-32UNF

-MB With female thread block, normally open (NO)[Note15] (base piping type) F15: Rc1/8

-MBH With female thread block, normally open (NO)[Note16] (base piping type) F15: NPT1/8

Caution: The 3-port specifications are only available in the valve specification **T0**, **T1**, and **T2**.

Back pressure prevention valve

Blank
No back pressure prevention valve

-E2
With back pressure prevention valve[Note13]

Individual air supply and exhaust spacer

Blank : No spacer
-PP6 : Single intake spacer (with ϕ 6 joint for F15)
-PP8 : Single intake spacer (with ϕ 8 joint for F15)
-PR6 : Single exhaust spacer (with ϕ 6 joint for F15)
-PR8 : Single exhaust spacer (with ϕ 8 joint for F15)
For details, see p. 27.

Port isolator

Blank : No port isolator
-SP : For 1(P) port[Note9]
-SR : For 3(R2), 5(R1) ports[Note9]
-SA : For 1(P), 3(R2), and 5(R1) ports[Note9]

Station	Valve size	Valve specification	Operation type	Manual override	Valve outlet type	Manifold fitting specification	Back pressure prevention valve	Individual air supply and exhaust spacer	Port isolator	Voltage
Mounting valve model										
stn. 1 · · stn.□ Note5	F15 F15L	T0 T3 TA[Note12] T1 T4 TB[Note12] T2 T5 TC[Note12]	Blank[Note10] G[Note11]	Blank -R[Note8]	-A1[Note6]		Blank -E2[Note13]	Blank -PP6 -PR6 -PP8 -PR8	Blank -SP[Note9] -SR[Note9] -SA[Note9]	DC24V DC12V[Note2] AC100V[Note3] AC120V[Note3]
	F15	BPP (for block-off plate)[Note7]								
stn. 1 · · stn.□ Note5	F15 F15L	T0 T3 TA[Note12] T1 T4 TB[Note12] T2 T5 TC[Note12]	Blank[Note10] G[Note11]	Blank -R[Note8]	-A1[Note6]	-J5[Note15] -J6A[Note15] -J6[Note15] -J6B[Note15] -M[Note15] -MA[Note15] -MH[Note16] -MAH[Note16] -J5A[Note15] -MB[Note15] -J5B[Note15] -MBH[Note16]	Blank -E2[Note13]	Blank -PP6 -PR6 -PP8 -PR8	Blank -SP[Note9] -SR[Note9] -SA[Note9]	DC24V DC12V[Note2] AC100V[Note3] AC120V[Note3]
	F15	BPP (for block-off plate)[Note7]								
stn. 1 · · stn.□ Note5	F15 F15L	T0 T3 TA[Note12] T1 T4 TB[Note12] T2 T5 TC[Note12]	Blank[Note10] G[Note11]	Blank -R[Note8]	-FJ[Note15] -FJ6A[Note15] -FJ5[Note15] -FJ6B[Note15] -FJ6[Note15] -FMA[Note15] -FM[Note15] -FMAH[Note16] -FMH[Note16] -FMB[Note15] -FJ5A[Note15] -FMBH[Note16] -FJ5B[Note15]		Blank -E2[Note13]	Blank -PP6 -PR6 -PP8 -PR8	Blank -SP[Note9] -SR[Note9] -SA[Note9]	DC24V DC12V[Note2] AC100V[Note3] AC120V[Note3]
	F15	BPP (for block-off plate)[Note7]								

Notes:
5. Valve mounting location is from the left, with the solenoid on top, and the 4(A), 2(B) ports side in front.
6. When selecting **J**, **M**, or **L** (base piping type) for the manifold outlet specification, always enter **-A1** (with plate) for the valve outlet type.
7. Caution should be exercised that the block-off plate wiring is always double wiring (allocated 2 control pins at 1 stn.), regardless of the wiring connection specification. For wiring for a single solenoid, see p. 71.
8. When the valve specification is **T1** or **T2**, the manual override lever is placed only on the A side.
9. Port isolators can be installed only when piping blocks are mounted on both sides. In addition, only 1 port isolator can be mounted in 1 manifold for **-SA**, or 1 each port isolator for **-SP** and **-SR** for a total of 2 locations. When shipping, the designated port isolators are mounted between the designated station and the station to its immediate left (the next smaller stn. No.).
10. Cannot be mounted on the external pilot manifold.
11. Cannot be mounted on the internal pilot manifold.
12. Not available in external pilot type.
13. Not available with the individual exhaust spacer.
14. The 3-port specifications are only available in the valve specification **T0**, **T1**, and **T2**.
15. Can be selected only when the manifold type is **P**.
16. Can be selected only when the manifold type is **PH**.

Parts for manifold

F15Z - □

Valve size
15: 15 mm [0.591 in.] width

Parts content
GS2 : Gasket (gasket and exhaust valve)
SP : Port isolator (for 1(P) port)
SR : Port isolator (for 3(R2), 5(R1) ports)
SA : Port isolator (for 1(P), 3(R2), 5(R1) ports)

Block-off plate (block-off plate, 2 mounting screws, and plug)

F15BP P

Valve size
15: 15 mm [0.591 in.] width

For plug-in type

Valve base assembly (valve base, gasket, lead wire, and plug-in connector)

F15Z □ - □ - □

Valve size
15: 15 mm [0.591 in.] width

Pilot specification
Blank : Internal pilot
G : External pilot

Piping specification
VJ : Dual use fitting valve base
VJ5 : Single use fitting valve base F15: ϕ 6
VJ6 : Single use fitting valve base F15: ϕ 8
VJ5A : 3-port specification normally closed, single use fitting valve base F15: ϕ 6
VJ5B : 3-port specification normally open, single use fitting valve base F15: ϕ 6
VJ6A : 3-port specification normally closed, single use fitting valve base F15: ϕ 8
VJ6B : 3-port specification normally open, single use fitting valve base F15: ϕ 8
VM : Female thread valve base
VMA : 3-port specification normally closed, female thread valve base
VMB : 3-port specification normally open, female thread valve base
VP : Valve base plate

Wiring specification
D : For D-sub connector
F : For flat cable connector, terminal block

Piping block assembly

F15Z □ - □

Valve size
15: 15 mm [0.591 in.] width

Pilot specification
Blank : Internal pilot
G : External pilot

Piping specification
PJ : Dual use fitting piping block
PJ5 : Single use fitting piping block ϕ 8
PJ6 : Single use fitting piping block ϕ 10
PM : Female thread piping block

End blocks (one set of left and right)

F15Z □ - □

Valve size
15: 15 mm [0.591 in.] width

Pilot specification
Blank : Internal pilot
G : External pilot

End block specification
E : For wiring specification T200
EL : For wiring block left side
ER : For wiring block right side

Wiring block assembly (one set)

F15Z - □ - □

Valve size
15: 15 mm [0.591 in.] width

Piping specification
F150 : Flat cable connector (DC specification)
F151 : Flat cable connector (DC specification)
F200 : Flat cable connector (DC specification)
F201 : Flat cable connector (DC specification)
F260 : Flat cable connector (DC specification)
D250 : D-sub connector
D251 : D-sub connector
F150N : Flat cable connector (DC specification), without power terminal
F151N : Flat cable connector (DC specification), without power terminal
F200N : Flat cable connector (DC specification), without power terminal
F201N : Flat cable connector (DC specification), without power terminal
F260N : Flat cable connector (DC specification), without power terminal
D250N : D-sub connector, without power terminal
D251N : D-sub connector, without power terminal
T200L : Terminal block for left-side mounting
T200R : Terminal block for right-side mounting

Voltage (Not required for T200□)
DC24
DC12
AC100 (for **D250□**, **D251□** only)

Back pressure prevention valve

(2 pieces for split type, with dedicated gasket)

F15Z - E2

Valve size
15: 15 mm [0.591 in.] width

Individual air supply and exhaust spacer (Spacer for plug-in type, gasket, exhaust valve, and 2 mounting screws)

F15Z - □

Valve size
15: 15 mm [0.591 in.] width

Specification
PP6: Single intake spacer (with ϕ 6 joint for F15)
PP8: Single intake spacer (with ϕ 8 joint for F15)
PR6: Single exhaust spacer (with ϕ 6 joint for F15)
PR8: Single exhaust spacer (with ϕ 8 joint for F15)

※ For details, see p. 27.

■ Table for maximum number of valve units by wiring specification

Wiring specification	Max. outputs	Maximum number of units — Wiring connection specification: Packed wiring (Blank)	Maximum number of units — Wiring connection specification: Double wiring (-W)
F100 □ Flat cable (10P)	8	Varies depending on the number of mounted single solenoids, double solenoids, and block-off plates. The number of controlled solenoids should be designated as the maximum number of outputs or less.	4 units
F101 □ Flat cable (10P)	8		4 units
F200 □ Flat cable (20P)	16		8 units
F201 □ Flat cable (20P)	16		8 units
F260 □ Flat cable (26P)	20		10 units
D250 □ D-sub connector (25P)	16		8 units
D251 □ D-sub connector (25P)	20		10 units
T200 Terminal block (19 terminals)	18		9 units

Muffler

KM - J□

Fitting size
6: Outer diameter $\phi 6$ (for individual exhaust spacer)
8: Outer diameter $\phi 8$ (for individual exhaust spacer)
10: Outer diameter $\phi 10$
(Sales unit: Set of 10 mufflers)

DIN rail

DIN - □ (Unit:1)

Rail length
125: 125mm [4.921 in.]
⋮ (25 mm [0.984 in.] pitch)
525: 525mm [20.669 in.]

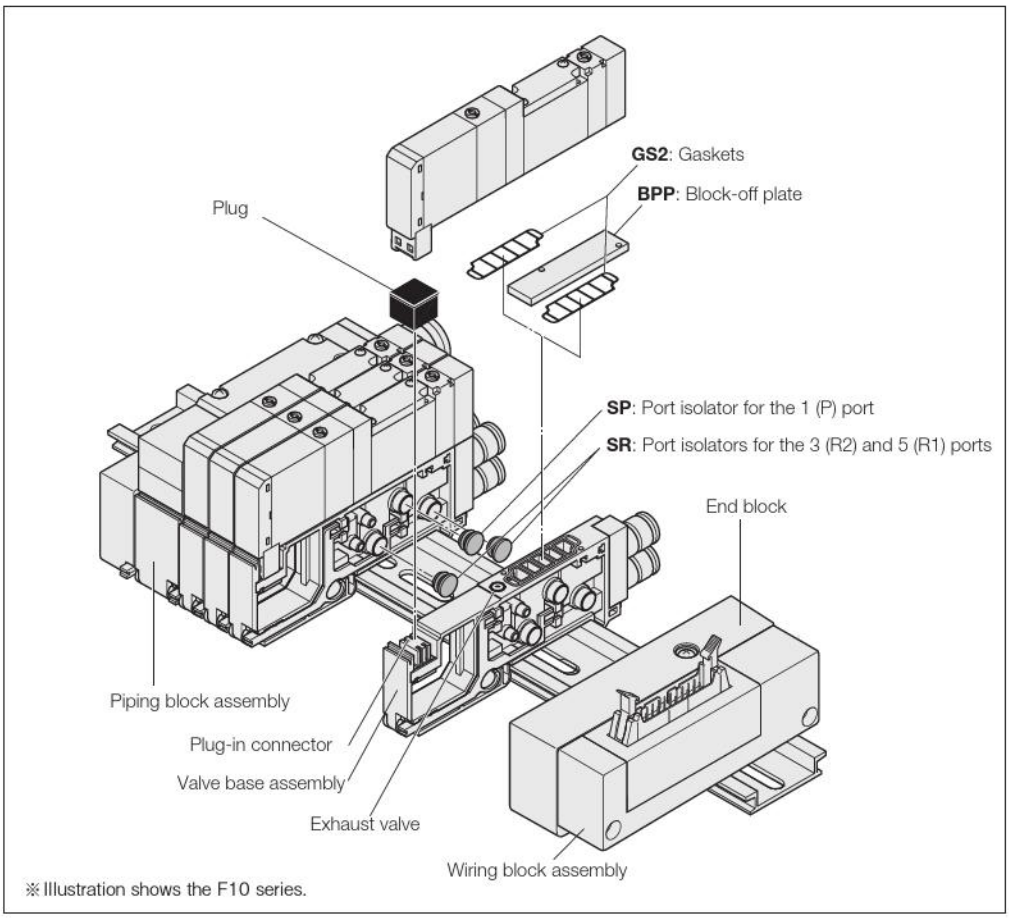

※Illustration shows the F10 series.

Manifold Order Code Example

(12 units of F15 Series)

F15M12PL-J5R-F201 DC24V

stn.1～8	F15T0-A1-J5 DC24V
stn.9～11	F15T2-A1-J6 DC24V
stn.12	F15BPP-J6

Note: This order code example has no relationship to the illustration above.

Precautions for Order Codes

● **Orders for valves only**
Place orders from "Single Valve Unit Order Codes" on p. 162.
However, **Blank, A2, F3, F4, F5, F6, F4A, F4B, F5A, F5B, F6A,** and **F6B** cannot be selected for the valve outlet type. For the wiring specification, **Blank** is the only selection.

● **Wiring connection specification**
Blank (packed wiring): Wiring is made in accordance with the mounted valve specifications.
-W (double wiring): Wiring is always for the double solenoid, regardless of the specifications of the mounted valve.

Caution

Caution should be exercised that the block-off plate wiring is always double wiring (allocated 2 control pins at 1 stn.), regardless of the wiring connection specification. The block-off plate wiring can be made as wiring for a single solenoid. Add **-1W** to the end of the block-off plate order code in the case.
For details, consult us.

F15 Series Split Manifold Serial Transmission Type Order Codes

■ Manifold outlet specification

With dual use fitting blocks (base piping type)

J

Outlet port fitting
F15: ϕ 6 , ϕ8

With selectable fittings (base piping type)

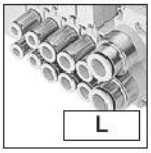

L

Outlet port should be selected in accordance with the manifold fitting specification.

With female thread blocks (base piping type)

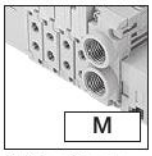

M

Outlet port female thread
F15: Rc1/8

With plates (direct piping type)

Blank

■ Pilot specification

Blank

Internal pilot manifold

G

External pilot manifold

■ Piping block specification (air supply and exhaust)

Fitting block
-JR : Dual use fitting, right-side mounting[Note13]
-JL : Dual use fitting, left-side mounting[Note13]
-JD : Dual use fitting, both-side mounting[Note13]
Fitting size (1(P), 3, 5(R) ports), ϕ8, ϕ10

Female thread block
-MR : Female thread, right-side mounting[Note13]
-ML : Female thread, left-side mounting[Note13]
-MD : Female thread, both-side mounting[Note13]
Female thread size (1(P), 3, 5(R) ports), Rc1/4

Female thread block
-MRH : Female thread, right-side mounting[Note14]
-MLH : Female thread, left-side mounting[Note14]
-MDH : Female thread, both-side mounting[Note14]
Female thread size (1(P), 3, 5(R) ports), NPT1/4

Single use fitting block
-J5R : Single use fitting, right-side mounting[Note13]
-J5L : Single use fitting, left-side mounting[Note13]
-J5D : Single use fitting, both-side mounting[Note13]
Fitting size (1(P), 3, 5(R) ports), ϕ8
-J6R : Single use fitting, right-side mounting[Note13]
-J6L : Single use fitting, left-side mounting[Note13]
-J6D : Single use fitting, both-side mounting[Note13]
Fitting size (1(P), 3, 5(R) ports), ϕ10

■ Transmission block specification

※ These are the serial transmission block specifications compatible with each system.

● Block on the right photo is the case of B7A Link Terminal.
For details, see p. 41-44.

Integrated type
-B1 : For CC-Link (16 outputs)[Note2]
-B3 : For CC-Link (32 outputs)[Note2]
-D1 : For DeviceNet (16 outputs)
-D3 : For DeviceNet (32 outputs)
-H1 : For CompoNet (16 outputs)
-K1 : For EtherCAT (16 outputs)
-K3 : For EtherCAT (32 outputs)
-M1 : For EtherNet/IP (16 outputs)[Note2]
-M3 : For EtherNet/IP (32 outputs)[Note2]

Stand-alone type
-31 : For OMRON B7A Link Terminal (standard)
-32 : For OMRON B7A Link Terminal (high speed)

■ Wiring connection specification

Blank

Packed wiring: Wiring is made in accordance with the mounted valve specifications.

-W

Double wiring: Wiring is always for the double solenoid, regardless of the specifications of the mounted valve.

■ Wiring position (transmission block)

Blank : Left-side mounting
-R : Right-side mounting

■ Valve size

F15 Standard type

F15L Low-current type

■ Valve size

F15M 15 mm [0.591 in.] width

	Valve size	Valve units	Manifold type	Manifold outlet specification	Pilot specification	Piping block specification	Transmission block specification	Wiring connection specification	Wiring position
	Manifold model								
Base piping type	F15M	2 : □ Note1	S	J M	Blank G	-JR -J5R -JL -J6R -JD -J5L -MR -J6L -ML -J5D -MD -J6D	-31 -D1 -K3 -32 -D3 -M1[Note2] -B1[Note2] -H1 -M3[Note2] -B3[Note2] -K1	Blank -W	Blank -R
Base piping type selectable fitting	F15M	2 : □ Note1	S	L	Blank G	-JR[Note13] -MDH[Note14] -JL[Note13] -J5R[Note13] -JD[Note13] -J6R[Note13] -MR[Note13] -J5L[Note13] -ML[Note13] -J6L[Note13] -MD[Note13] -J5D[Note13] -MRH[Note14] -J6D[Note13] -MLH[Note14]	-31 -D1 -K3 -32 -D3 -M1[Note2] -B1[Note2] -H1 -M3[Note2] -B3[Note2] -K1	Blank -W	Blank -R
Direct piping type	F15M	2 : □ Note1	SH	Blank	Blank G	-JR[Note13] -MDH[Note14] -JL[Note13] -J5R[Note13] -JD[Note13] -J6R[Note13] -MR[Note13] -J5L[Note13] -ML[Note13] -J6L[Note13] -MD[Note13] -J5D[Note13] -MRH[Note14] -J6D[Note13] -MLH[Note14]	-31 -D1 -K3 -32 -D3 -M1[Note2] -B1[Note2] -H1 -M3[Note2] -B3[Note2] -K1	Blank -W	Blank -R

Notes: 1. To determine the maximum number of units, see the table for maximum number of valve units by transmission block specification, on p. 196.
2. Complies with the CE marking regulation.

Valve specification

T0 : 2-position, for single solenoid only
T1 : 2-position, single solenoid specification
T2 : 2-position, double solenoid specification
T3 : 3-position, closed center
T4 : 3-position, exhaust center
T5 : 3-position, pressure center
TA : Tandem 3-port (NC and NC)[Note10]
TB : Tandem 3-port (NO and NO)[Note10]
TC : Tandem 3-port (NC and NO)[Note10]

Operation type

Blank
Internal pilot type[Note8]

G
External pilot type[Note9]
(for positive pressure)
※ No vacuum valve can be mounted.

Manual override

Manual override button

Manual override lever[Note6]

Valve outlet type

-A1 With plate[Note4] (base piping type)

5-port specification

-FJ With dual use fitting block[Note13] (direct piping type) F15: ϕ 6, ϕ 8
-FJ5 With single use fitting block[Note13] (direct piping type) F15: ϕ 6
-FJ6 With single use fitting block[Note13] (direct piping type) F15: ϕ 8
-FM With female thread block[Note13] (direct piping type) F15: Rc1/8
-FMH With female thread block[Note14] (direct piping type) F15: NPT1/8

3-port specification

-FJ5A With single use fitting block, normally closed (NC)[Note13] (direct piping type) F15: ϕ 6
-FJ5B With single use fitting block, normally open (NO)[Note13] (direct piping type) F15: ϕ 6
-FJ6A With single use fitting block, normally closed (NC)[Note13] (direct piping type) F15: ϕ 8
-FJ6B With single use fitting block, normally open (NO)[Note13] (direct piping type) F15: ϕ 8
-FMA With female thread block, normally closed (NC)[Note13] (direct piping type) F15: Rc1/8
-FMAH With female thread block, normally closed (NC)[Note14] (direct piping type) F15: NPT1/8
-FMB With female thread block, normally open (NO)[Note13] (direct piping type) F15: Rc1/8
-FMBH With female thread block, normally open (NO)[Note14] (direct piping type) F15: NPT1/8

Caution: The 3-port specifications are only available in the valve specification **T0**, **T1**, and **T2**.

Manifold fitting specification

5-port specification

-J5 With single use fitting block (base piping type) F15: ϕ 6
-J6 With single use fitting block (base piping type) F15: ϕ 8
-M With female thread block (base piping type) F15: Rc1/8
-MH With female thread[Note14] block (base piping type) F15: NPT1/8

3-port specification

-J5A With single use fitting block, normally closed (NC) (base piping type) F15: ϕ 6
-J5B With single use fitting block, normally open (NO) (base piping type) F15: ϕ 6
-J6A With single use fitting block, normally closed (NC) (base piping type) F15: ϕ 8
-J6B With single use fitting block, normally open (NO) (base piping type) F15: ϕ 8
-MA With female thread block, normally closed (NC) (base piping type) F15: Rc1/8
-MAH With female thread block, normally closed (NC)[Note14] (base piping type) F15: NPT1/8
-MB With female thread block, normally open (NO)[Note13] (base piping type) F15: Rc1/8
-MBH With female thread block, normally open (NO)[Note14] (base piping type) F15: NPT1/8

Caution: The 3-port specifications are only available in the valve specification **T0**, **T1**, and **T2**.

Port isolator

Blank : No port isolator
-SP : For 1(P) port[Note7]
-SR : For 3(R2), 5(R1) ports[Note7]
-SA : For 1(P), 3(R2), and 5(R1) ports[Note7]

Back pressure prevention valve

Blank
No back pressure prevention valve

-E2
With back pressure prevention valve[Note11]

Individual air supply and exhaust spacer

Blank : No spacer
-PP6 : Single intake spacer (with ϕ 6 joint for F15)
-PP8 : Single intake spacer (with ϕ 8 joint for F15)
-PR6 : Single exhaust spacer (with ϕ 6 joint for F15)
-PR8 : Single exhaust spacer (with ϕ 8 joint for F15)
For details, see p. 27.

Station	Valve size	Valve specification	Operation type	Manual override	Valve outlet type	Manifold fitting specification	Back pressure prevention valve	Individual air supply and exhaust spacer	Port isolator	Voltage
Mounting valve model										
stn. 1 : stn.□ Note3	F15 F15L	T0 T3 TA[Note10] T1 T4 TB[Note10] T2 T5 TC[Note10]	Blank[Note8] G[Note9]	Blank -R[Note6]	-A1[Note4]		Blank -E2[Note11]	Blank -PP6 -PR6 -PP8 -PR8	Blank -SP[Note7] -SR[Note7] -SA[Note7]	DC24V
	F15	BPP (for block-off plate)[Note3]								
stn. 1 : stn.□ Note3	F15 F15L	T0 T3 TA[Note10] T1 T4 TB[Note10] T2 T5 TC[Note10]	Blank[Note8] G[Note9]	Blank -R[Note6]	-A1[Note4]	-J5[Note13] -J6A[Note13] -J6[Note13] -J6B[Note13] -M[Note13] -MA[Note13] -MH[Note14] -MAH[Note14] -J5A[Note13] -MB[Note13] -J5B[Note13] -MBH[Note14]	Blank -E2[Note11]	Blank -PP6 -PR6 -PP8 -PR8	Blank -SP[Note7] -SR[Note7] -SA[Note7]	DC24V
	F15	BPP (for block-off plate)[Note3]								
stn. 1 : stn.□ Note3	F15 F15L	T0 T3 TA[Note10] T1 T4 TB[Note10] T2 T5 TC[Note10]	Blank[Note8] G[Note9]	Blank -R[Note6]	-FJ[Note13] -FJ6A[Note13] -FJ5[Note13] -FJ6B[Note13] -FJ6[Note13] -FMA[Note13] -FM[Note13] -FMAH[Note14] -FMH[Note14] -FMB[Note13] -FJ5A[Note13] -FMBH[Note12] -FJ5B[Note13]		Blank -E2[Note11]	Blank -PP6 -PR6 -PP8 -PR8	Blank -SP[Note7] -SR[Note7] -SA[Note7]	DC24V
	F15	BPP (for block-off plate)[Note5]								

Notes: 3. Valve mounting location is from the left, with the solenoid on top, and the 4(A), 2(B) ports side in front.
4. When selecting **J**, **M**, or **L** (base piping type) for the manifold outlet specifications, always enter **-A1** (with plate) for the valve outlet type.
5. Caution should be exercised that the block-off plate wiring is always double wiring (allocated 2 control pins at 1 stn.), regardless of the wiring connection specification. The block-off plate wiring can be made as wiring for a single solenoid. Add **-1W** to the end of the block-off plate order code in the case.
6. When the valve specification is **T1** or **T2**, the manual override lever is placed only on the A side.
7. Port isolators can be installed only when piping blocks are mounted on both sides. In addition, only 1 port isolator can be mounted in 1 manifold for **-SA**, or 1 each port isolator for **-SP** and **-SR** for a total of 2 locations. When shipping, the designated port isolators are mounted between the designated station and the station to its immediate left (the next smaller stn. No.).
8. Cannot be mounted on the external pilot manifold.
9. Cannot be mounted on the internal pilot manifold.
10. Not available in external pilot type.
11. Not available with the individual exhaust spacer.
12. The 3-port specifications are only available in the valve specification **T0**, **T1**, and **T2**.
13. Can be selected only when the manifold type is **S**.
14. Can be selected only when the manifold type is **SH**.

Parts for manifold

F15Z - □

Valve size
15: 15 mm [0.591 in.] width

Parts content
GS2 : Gasket (gasket and exhaust valve)
SP : Port isolator (for 1(P) port)
SR : Port isolator (for 3(R2), 5(R1) ports)
SA : Port isolator (for 1(P), 3(R2), 5(R1) ports)

Block-off plate (block-off plate, 2 mounting screws, and plug)

F15BPP

Valve size
15: 15 mm [0.591 in.] width

Valve base assembly
(valve base, gasket, lead wire, and plug-in connector)

F15Z □ - □ - F

Valve size
15: 15 mm [0.591 in.] width

Pilot specification
Blank : Internal pilot
G : External pilot

Piping specification
VJ : Dual use fitting valve base
VJ5 : Single use fitting valve base F15: ϕ 6
VJ6 : Single use fitting valve base F15: ϕ 8
VJ5A : 3-port specification normally closed, single use fitting valve base F15: ϕ 6
VJ5B : 3-port specification normally open, single use fitting valve base F15: ϕ 6
VJ6A : 3-port specification normally closed, single use fitting valve base F15: ϕ 8
VJ6B : 3-port specification normally open, single use fitting valve base F15: ϕ 8
VM : Female thread valve base
VMA : 3-port specification normally closed, female thread valve base
VMB : 3-port specification normally open, female thread valve base
VP : Valve base plate

Piping block assembly

F15Z □ - □

Valve size
15: 15 mm [0.591 in.] width

Piping specification
PJ : Dual use fitting piping block
PJ5 : Single use fitting piping block ϕ 8
PJ6 : Single use fitting piping block ϕ 10
PM : Female thread piping block Rc1/4

Pilot specification
Blank : Internal pilot
G : External pilot

End blocks (one set of left and right)

F15Z □ - □

Valve size
15: 15 mm [0.591 in.] width

End block specification
EL : For left side
ER : For right side

Pilot specification
Blank : Internal pilot
G : External pilot

Wiring block assembly ※

F15Z - F201N - DC24

Valve size
15: 15 mm [0.591 in.] width

※ Use this when the transmission block specification is **-01, -02, -31, -32, -51, -52.**

Back pressure prevention valve
(2 units for split type, with dedicated gasket)

F15Z - E2

Valve size
15: 15 mm [0.591 in.] width

Individual air supply and exhaust spacer
(Spacer for plug-in type, gasket, exhaust valve, and 2 mounting screws)

F15Z - □

Valve size
15: 15 mm [0.591 in.] width

Specification
PP6: Single intake spacer (with ϕ 6 joint for F15)
PP8: Single intake spacer (with ϕ 8 joint for F15)
PR6: Single exhaust spacer (with ϕ 6 joint for F15)
PR8: Single exhaust spacer (with ϕ 8 joint for F15)

※ For details, see p. 27.

Serial transmission block (single unit)

YS2 □ □

Transmission block specification
31: For OMRON B7A Link Terminal (standard)
32: For OMRON B7A Link Terminal (high speed)

Wiring position
L : For stand-alone type, left-side mounting ※
R : For stand-alone type, right-side mounting ※
※ DIN rail included (length 75 mm [2.95 in.])

YS6 □ (Dedicated for manifold mounting)

Transmission block specification
A1 : For OMRON CompoBus/S (16 outputs)
B1 : For CC-Link (16 outputs)
B3 : For CC-Link (32 outputs)
D1 : For DeviceNet (16 outputs)
D3 : For DeviceNet (32 outputs)
H1 : For CompoNet (16 outputs)

YS7 □ □ (Dedicated for manifold mounting)

Wiring position
L : Left-side mounting
R : Right-side mounting

Transmission block specification
K1 : For EtherCAT (16 outputs)
K3 : For EtherCAT (32 outputs)
M1 : For EtherNet/IP (16 outputs)
M3 : For EtherNet/IP (32 outputs)

■ Table for maximum number of valve units by transmission block specification

Transmission block specifications	Max. outputs	Maximum number of units — Wiring connection specification: Packed wiring (Blank)	Maximum number of units — Wiring connection specification: Double wiring (-W)
-31: For Omron B7A Link Terminal (standard)	16	Varies depending on the number of mounted single solenoids, double solenoids, and block-off plates. The number of controlled solenoids should be designated as the maximum number of outputs or less. **-B3, -D3, and -K3** are a maximum of 20 units.	8 units
-32: For Omron B7A Link Terminal (high speed)	16		8 units
-A1: For Omron CompoBus/S (16 outputs)	16		8 units
-B1: For CC-Link (16 outputs)	16		8 units
-B3: For CC-Link (32 outputs)	32		16 units
-D1: For DeviceNet (16 outputs)	16		8 units
-D3: For DeviceNet (32 outputs)	32		16 units
-H1: For CompoNet (16 outputs)	16		8 units
-K1: For EtherCAT (16 outputs)	16		8 units
-K3: For EtherCAT (32 outputs)	32		16 units
-M1: For EtherNet/IP (16 outputs)	16		8 units
-M3: For EtherNet/IP (32 outputs)	32		16 units

Muffler

KM - J □

Fitting size
- **6:** Outer diameter ϕ6 (for individual exhaust spacer)
- **8:** Outer diameter ϕ8 (for individual exhaust spacer)
- **10:** Outer diameter ϕ10

(Sales unit: Set of 10 mufflers)

DIN rail

DIN - □ (Unit:1)

Rail length
125: 125mm [4.921 in.]
⋮ (25 mm [0.984 in.] pitch)
525: 525mm [20.669 in.]

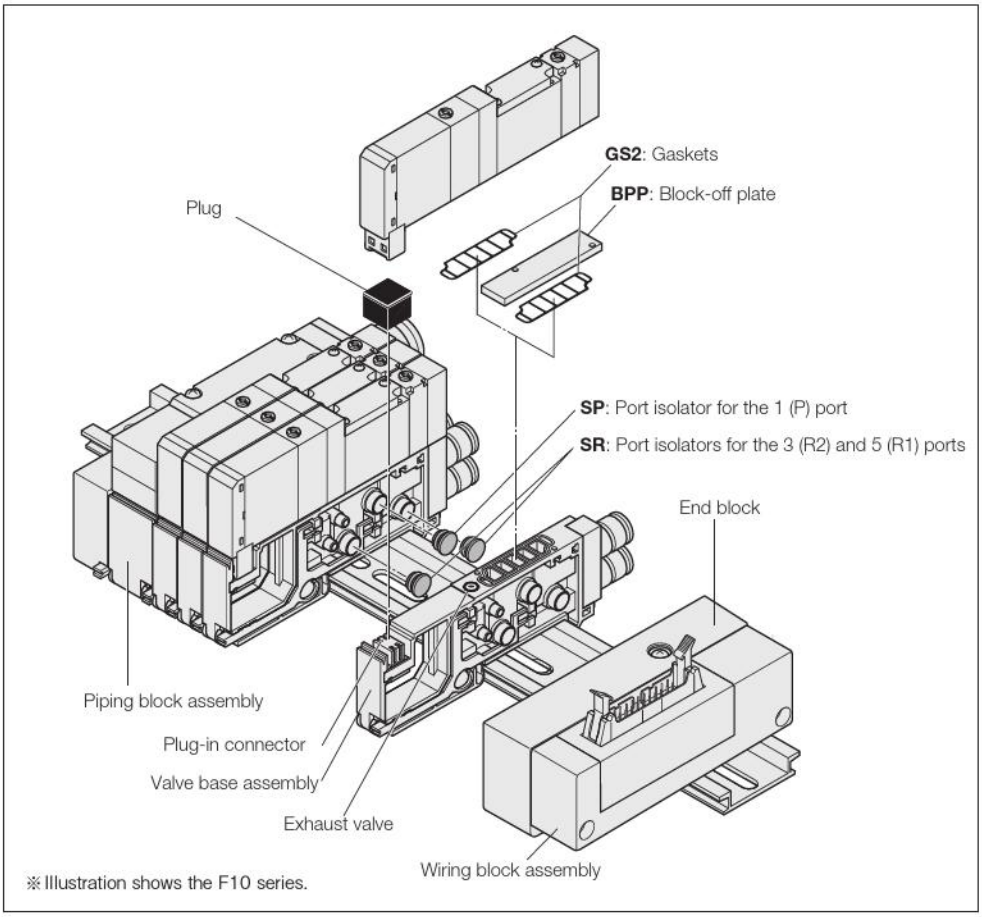

※Illustration shows the F10 series.

Manifold Order Code Example

(8 units of F15 Series)

F15M8SL-J5R-B1-W

stn.1～5	**F15T0-A1-J5 DC24V**
stn.6～7	**F15T2-A1-J6 DC24V**
stn.8	**F15BPP-J6**

Note: This order code example has no relationship to the illustration above.

Precautions for Order Codes

● **Orders for valves only**
Place orders from "Single Valve Unit Order Codes" on p. 162.
However, **Blank, A2, F3, F4, F5, F6, F4A, F4B, F5A, F5B, F6A,** and **F6B** cannot be selected for the valve outlet type. For the wiring specification, **Blank** is the only selection.

● **Wiring connection specification**
Blank (packed wiring): Wiring is made in accordance with the mounted valve specifications.
-W (double wiring): Wiring is always for the double solenoid, regardless of the specifications of the mounted valve.

Caution

Caution should be exercised that the block-off plate wiring is always double wiring (allocated 2 control pins at 1 stn.), regardless of the wiring connection specification. The block-off plate wiring can be made as wiring for a single solenoid. Add **-1W** to the end of the block-off plate order code in the case.
For details, consult us.

F15 Series Easy Assembly Type Manifold Non-Plug-in Type Order Codes

■ **Valve size**

F15M
15 mm [0.591 in.] width

■ **Manifold outlet specification**

With dual use fitting blocks (base piping type)

Outlet port fitting
F15: ϕ6, ϕ8

With selectable fittings (base piping type)

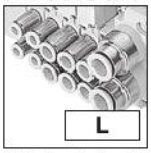

Outlet port should be selected in accordance with the manifold fitting specification.

With female thread blocks (base piping type)

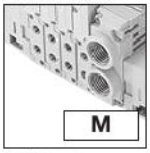

Outlet port female thread
F15: Rc1/8

With plates (direct piping type)

■ **Pilot specification**

Blank
Internal pilot manifold

G
External pilot manifold

■ **Piping block specification (air supply, exhaust and intermediate)**

Fitting block
-JR: Dual use fitting, right-side mounting
-JL: Dual use fitting, left-side mounting
-JD: Dual use fitting, both-side mounting
Fitting size (1(P), 3, 5(R) ports), ϕ8, ϕ10

Female thread block
-MR: Female thread, right-side mounting
-ML: Female thread, left-side mounting
-MD: Female thread, both-side mounting
Female thread size (1(P), 3, 5(R) ports), Rc1/4

Female thread block
-MRH: Female thread, right-side mounting Note15
-MLH: Female thread, left-side mounting Note15
-MDH: Female thread,both-side mounting Note15
Female thread size (1(P), 3, 5(R) ports), NPT1/4

Single use fitting block
-J5R: Single use fitting, right-side mounting
-J5L: Single use fitting, left-side mounting
-J5D: Single use fitting, both-side mounting
Fitting size (1(P), 3, 5(R) ports), ϕ8
-J6R: Single use fitting, right-side mounting
-J6L: Single use fitting, left-side mounting
-J6D: Single use fitting, both-side mounting
Fitting size (1(P), 3, 5(R) ports), ϕ10

Intermediate piping block
-JT : Dual use fitting, both-side mounting, intermediate piping block, ϕ8, ϕ10
-J5T: Single use fitting, both-side mounting, intermediate piping block, ϕ8
-J6T: Single use fitting, both-side mounting, intermediate piping block, ϕ10
-MT : Female thread, both-side mounting, intermediate piping block mounting, Rc1/4
-MTH: Female thread, both-side mounting, intermediate piping block NPT1/4 Note15

■ **Mounting specification**

Blank
Direct mounting

-DN
With DIN bracket (no rail)

-DR
With DIN bracket, with rail
Caution: For information on rails assembled and shipped, see p. 242 and 243.

	Valve size	Valve units	Manifold type	Manifold outlet specification	Pilot specification	Piping block specification	Mounting specification
	Manifold model						
Base piping type	F15M	2 : 21 Note1	XN (※Rc)	J M	Blank G	-JR -J5R -JT -JL -J5L -J5T -JD -J5D -J6T -MR -J6R -MT -ML -J6L -MD -J6D	Blank -DN -DR
Base piping type selectable fitting			XN (※Rc) XNH (※NPT) Only L or Blank is available in the inch female thread specification and the manifold outlet specification.	L	Blank G	-JR -MLH Note15 -J6D -JL -MDH Note15 -JT -JD -J5R -J5T -MR -J5L -J6T -ML -J5D -MT -MD -J6R -MTH Note15 -MRH Note15 -J6L	Blank -DN -DR
Direct piping type				Blank	Blank G	-JR -MLH Note15 -J6D -JL -MDH Note15 -JT -JD -J5R -J5T -MR -J5L -J6T -ML -J5D -MT -MD -J6R -MTH Note15 -MRH Note15 -J6L	Blank -DN -DR

Notes:1.Up to 20 valves, with one intermediate piping block.
2.Valve mounting location is from the left, with the solenoid on top, and the 4(A), 2(B) ports side in front.
3.When the valve specification is **T1** or **T2**, the manual override lever is placed only on the **A** side.
4.When selecting **J**, **M**, or **L** (base piping type) for the manifold outlet specification, always enter **-A1** (with plate) for the valve outlet type.

Valve type

T0: 2-position, for single solenoid only
T1: 2-position, single solenoid specification
T2: 2-position, double solenoid specification
T3: 3-position, closed center
T4: 3-position, exhaust center
T5: 3-position, pressure center
TA: Tandem 3-port (NC and NC)[Note8]
TB: Tandem 3-port (NO and NO)[Note8]
TC: Tandem 3-port (NC and NO)[Note8]

Operation type

Blank
Internal pilot type[Note6]

G
External pilot type[Note7] (for positive pressure)
※No vacuum valve can be mounted.

Manual override

Manual override button

Manual override lever[Note3]

Valve outlet type

-A1 With plate[Note4] (base piping type)

5-port specification

-FJ With dual use fitting block **F15**: $\phi6$, $\phi8$ (direct piping type)
-FJ5 With single use fitting block **F15**: $\phi6$ (direct piping type)
-FJ6 With single use fitting block **F15**: $\phi8$ (direct piping type)
-FM With female thread block **F15**: Rc1/8 (direct piping type)
-FMH With female thread block[Note15] (direct piping type) **F15**: NPT1/8

3-port specification

-FJ5A With single use fitting block, normally closed (NC) (direct piping type) **F15**: $\phi6$
-FJ5B With single use fitting block, normally open (NO) (direct piping type) **F15**: $\phi6$
-FJ6A With single use fitting block, normally closed (NC) (direct piping type) **F15**: $\phi8$
-FJ6B With single use fitting block, normally open (NO) (direct piping type) **F15**: $\phi8$
-FMA With female thread block, normally closed (NC) (direct piping type) **F15**: Rc1/8
-FMAH With female thread block, normally closed (NC)[Note15] (direct piping type) **F15**: NPT1/8
-FMB With female thread block, normally open (NO) (direct piping type) **F15**: Rc1/8
-FMBH With female thread block, normally open (NO)[Note15] (direct piping type) **F15**: NPT1/8

Caution: The 3-port specifications are only available in the valve specification **T0**, **T1**, and **T2**.

Wiring specification[Note12]

S type plug connector
Without connector

S type plug connector
Lead wire 300 mm [11.8 in.]

-PS3
S type plug connector
Lead wire 3000 mm [118 in.]

Pre-wired positive common terminal
S type plug connector
Lead wire 300 mm [11.8 in.]

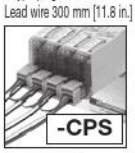

-CPS3
Pre-wired positive common terminal
S type plug connector
Lead wire 3000 mm [118 in.]

-MS
Pre-wired negative common terminal
S type plug connector
Lead wire 300 mm [11.8 in.]

-MS3
Pre-wired negative common terminal
S type plug connector
Lead wire 3000 mm [118 in.]

-CMS
Pre-wired negative common terminal
S type plug connector
Lead wire 300 mm [11.8 in.]

-CMS3
Pre-wired negative common terminal
S type plug connector
Lead wire 3000 mm [118 in.]

Manifold fitting specification

5-port specification

-J5 With single use fitting block **F15**: $\phi6$ (base piping type)
-J6 With single use fitting block **F15**: $\phi8$ (base piping type)
-M With female thread block **F15**: Rc1/8 (base piping type)
-MH With female thread block[Note15] (base piping type) **F15**: NPT1/8

3-port specification

-J5A With single use fitting block, normally closed (NC) (base piping type) **F15**: $\phi6$
-J5B With single use fitting block, normally open (NO) (base piping type) **F15**: $\phi6$
-J6A With single use fitting block, normally closed (NC) (base piping type) **F15**: $\phi8$
-J6B With single use fitting block, normally open (NO) (base piping type) **F15**: $\phi8$
-MA With female thread block, normally closed (NC) (base piping type) **F15**: Rc1/8
-MAH With female thread block, normally closed (NC)[Note15] (base piping type) **F15**: NPT1/8
-MB With female thread block, normally open (NO) (base piping type) **F15**: Rc1/8
-MBH With female thread block, normally open (NO)[Note15] (base piping type) **F15**: NPT1/8

Caution: The 3-port specifications are only available in the valve specification **T0**, **T1**, and **T2**.

Port isolator

Blank: No port isolator
-XSP: For 1 (P) port[Note5]
-XSR: For 3 (R2), 5 (R1) ports[Note5]
-XSA: For 1 (P), 3 (R2), and 5(R1) ports[Note5]

Back pressure prevention valve

Blank
No back pressure prevention valve

-E2
With back pressure prevention valve[Note9]

Individual air supply and exhaust spacer

Blank: No spacer
-XNP6 : Single intake spacer (with $\phi6$ joint for F15)
-XNP8 : Single intake spacer (with $\phi8$ joint for F15)
-XNR6 : Single exhaust spacer (with $\phi6$ joint for F15)
-XNR8 : Single exhaust spacer (with $\phi8$ joint for F15)
-STP : With stop valve[Note6]

See page 27 for details.

Valve size

F15 Standard type
F15L Low-current type

Station	Valve size	Valve specification	Operation type	IP Specifications	Manual override	Valve outlet type	Wiring specification	Manifold fitting specification	Back pressure prevention valve	Individual air supply, exhaust spacer and stop valve	Port isolator	Voltage
Mounting valve model												
stn. 1 ⋮ stn.□ Note2	F15 F15L	T0 T1 T2 T3 T4 T5 TA[Note8] TB[Note8] TC[Note8]	Blank[Note6] G[Note7]	Blank -P Note13	Blank -R[Note3]	-A1[Note4]	-PN -PS[Note12] -PS3 -CPS -CPS3 -MS -MS3 -CMS -CMS3	Blank -E2[Note9]	Blank -XNP6 -XNP8 -XNR6 -XNR8 -STP[Note6]	Blank -XSP[Note5] -XSR[Note5] -XSA[Note5]	DC24V DC12V[Note10] AC100V[Note11]
	F15	XBPN (for block-off plate)								Blank -STP[Note6]		
When selecting the intermediate piping block, see page 100 when specifying it.												
stn. 1 ⋮ stn.□ Note2	F15 F15L	T0 T1 T2 T3 T4 T5 TA[Note8] TB[Note8] TC[Note8]	Blank[Note6] G[Note7]	Blank -P Note13	Blank -R[Note3]	-A1[Note4]	-PN -PS[Note12] -PS3 -CPS -CPS3 -MS -MS3 -CMS -CMS3	-J5[Note14] -J6[Note14] -M[Note14] -MH[Note15] -J5A[Note14] -J5B[Note14] -J6A[Note14] -J6B[Note14] -MA[Note14] -MAH[Note15] -MB[Note14] -MBH[Note15]	Blank -E2[Note9]	Blank -XNP6 -XNP8 -XNR6 -XNR8 -STP[Note6]	Blank -XSP[Note5] -XSR[Note5] -XSA[Note5]	DC24V DC12V[Note10] AC100V[Note11]
	F15	XBPN (for block-off plate)								Blank -STP[Note6]		
When selecting the intermediate piping block, see page 100 when specifying it.												
stn. 1 ⋮ stn.□ Note2	F15 F15L	T0 T1 T2 T3 T4 T5 TA[Note8] TB[Note8] TC[Note8]	Blank[Note6] G[Note7]	Blank -P Note13	Blank -R[Note3]	-FJ[Note14] -FJ5[Note14] -FJ6[Note14] -FM[Note14] -FMH[Note15] -FJ5A[Note14] -FJ5B[Note14] -FJ6A[Note14] -FJ6B[Note14] -FMA[Note14] -FMAH[Note15] -FMB[Note14] -FMBH[Note15]	-PN -PS[Note12] -PS3 -CPS -CPS3 -MS -MS3 -CMS -CMS3	Blank -E2[Note9]	Blank -XNP6 -XNP8 -XNR6 -XNR8 -STP[Note6]	Blank -XSP[Note5] -XSR[Note5] -XSA[Note5]	DC24V DC12V[Note10] AC100V[Note11]
	F15	XBPN (for block-off plate)								Blank -STP[Note6]		
When selecting the intermediate piping block, see page 200 when specifying it.												

Notes:5. Port isolators can be installed only when piping blocks are mounted on both sides. In addition, only 1 port isolator can be mounted in 1 manifold for **-XSA**, or 1 each port isolator for **-XSP** and **-XSR** for a total of 2 locations. When shipping, the designated port isolators are mounted between the designated station and the station to its immediate left (the next smaller stn. No.).
6. Cannot be mounted on the external pilot manifold. Only direct mounting is available.
7. Cannot be mounted on the internal pilot manifold.
8. Not available in external pilot type.
9. Not available with the individual exhaust spacer.
10. Not available in low-current type.
11. Not available in low-current type and tandem 3-port valves.
12. Wiring specifications of **-P□** and **-CP□**, the **-M□** and **-CM□**, positive common and negative common cannot be mounted together.
13. The IP65 protective structure around an electrical device that prevents the infiltration of solid foreign material and water from outside.
14. The 3-port specifications are only available in the valve specification **T0**, **T1**, and **T2**.
15. Can be selected only when the manifold type is **XNH**.

Intermediate piping block

(When mounting an intermediate piping block to the manifold, complete the following type and specify the station specified on page 199.)

F 15 ZX□ - □ - TN - □

Valve size
15: 15 mm
[0.591 in.] width

Pilot specification
Blank: Internal pilot
G: External pilot

Piping block Specification[Note]
PJ : With dual use fitting ϕ8, ϕ10
PJ5 : With single use fitting ϕ8
PJ6 : With single use fitting ϕ10
PM : With female thread Rc 1/4
PMH : With female thread NPT 1/4

Manifold type
TN: **For non-plug-in type**

Port isolator
Blank: No port isolator
XSP: Port isolator (1(P) port)
XSR: Port isolator (3(R2), 5(R1) ports)
XSA: Port isolator (1(P), 3(R2), and 5(R1) ports)

Note:See the following table for combinations of intermediate piping block port specifications and manifold piping block specifications.

Manifold piping specifications	Intermediate piping block
JT	PJ
J5T	PJ5
J6T	PJ6
MT	PM
MTH	PMH

F15 Series Easy Assembly Type Manifold Non-Plug-in Type Additional Parts Order Codes

Parts for manifold

F 15 ZX - □

Valve size
15: 15 mm [0.591 in.] width

Parts content
GS2: Gasket (gasket and exhaust valve)
GS3: Gasket (valve base side)
XSP: Port isolator (for 1(P) port)
XSR: Port isolator (for 3(R2), 5(R1) ports)
XSA: Port isolator (for 1(P), 3(R2), 5(R1) ports)
DN : DIN mounting bracket (one set of two)

Block-off plate (block-off plate, 2 mounting screws, and plug)

F 15 XBP N

Valve size
15: 15 mm [0.591 in.] width

For non-plug-in type

Back pressure prevention valve (for divided type, two, with dedicated gasket)

F 15 Z - E2

Valve size
15: 15 mm [0.591 in.] width

Individual air supply and exhaust spacer (Spacer for non-plug-in type, gasket, exhaust valve, and 2 mounting screws)

F 15 ZX - □

Valve size
15: 15 mm [0.591 in.] width

※For details, see p.27.

Specification
XNPM: Individual air supply spacer (with M5 female thread for F15)
XNRM: Individual exhaust spacer (with M5 female thread for F15)

Valve base assembly (valve base, gasket, and 2 connecting rods for adding)

F 15 ZX - □ *For use with both internal pilot and external pilot

Valve size
15: 15 mm [0.591 in.] width

Piping specifications
VJ : Dual use fitting valve base
VJ5 : Single use fitting valve base F15: $\phi 6$
VJ6 : Single diameter fitting valve base F15: $\phi 8$
VJ5A : 3-port specification normally closed, single use fitting valve base F15: $\phi 6$
VJ5B : 3-port specification normally open, single use fitting valve base F15: $\phi 6$
VJ6A : 3-port specification normally closed, single use fitting valve base F15: $\phi 8$
VJ6B : 3-port specification normally open, single use fitting valve base F15: $\phi 8$
VM : Female thread valve base F15: Rc1/8
VMA : 3-port specification normally closed, female thread valve base F15: Rc1/8
VMB : 3-port specification normally open, female thread valve base F15: Rc1/8
VMH : Female thread valve base F15: NPT1/8
VMAH : 3-port specification normally closed, female thread valve base F15: NPT1/8
VMBH : 3-port specification normally open, female thread valve base F15: NPT1/8
VP : Valve base plate

Piping block assembly (non-plug-in)

F 15 ZX□ - □ - □ - □ - □

Valve size
15: 15 mm [0.591 in.] width

Port isolator Note2
Blank: No port isolator
XSP: Port isolator (1(P) port)
XSR: Port isolator (3(R2), 5(R1) ports)
XSA: Port isolator (1(P), 3(R2), and 5(R1) ports)

Mounting specification Note3
Blank: Without DIN bracket
DN: With DIN bracket

Pilot specification
Blank: Internal pilot
G: External pilot

Manifold type
LN : Left side piping block (for non-plug-in type) without circuit board (with end lid)
RN : Right piping block, without circuit board
TN : Intermediate piping block (for non-plug-in type) without circuit board

Piping block Specification Note1
PJ : With dual use fitting $\phi 8$, $\phi 10$
PJ5: With single use fitting $\phi 8$
PJ6: With single use fitting $\phi 10$
PM : With female thread Rc 1/4
PMH: With female thread NPT 1/4
PP : Plate (without fitting)

Notes:1.The fitting of the piping block is included. One set of two connecting rods is also included for a LN and TN type manifold.
2.Port isolator selection only available when the piping block name is TN.
3.Only when the manifold type is LN or RN.

Muffler

KM - J □

Fitting size
6: Outer diameter $\phi 6$ (for piping block)
8: Outer diameter $\phi 8$ (for piping block, for single exhaust spacer)
10: Outer diameter $\phi 6$ (for single exhaust spacer)
(Sales unit: Set of 10 mufflers)

Connecting rod (1 set of 2)

F 15 ZX - □ - □

Valve size
15: 15 mm [0.591 in.] width

Specification
RV: For valve base
RH: For left piping block
RC: For intermediate piping block

Number of units
01 ~ 20: When type for valve base (RV) is selected
01 : When type for left side piping block (RH) is selected
01 : When type for intermediate piping block (RC) is selected

DIN rail

DIN - □ (Unit:1)

Rail length
125: 125mm [4.921 in.]
⋮ (25 mm [0.984 in.] pitch)
525: 525mm [20.669 in.]

Connector-related order codes

JAZ - P - □ (for double use only)

Valve specification
T2,T3,T4, T5,TA,TB,
For **TC**

IP Specification

Connector specification
CP : Positive common, connector, lead wire length 300 mm [11.8 in.] (black, red, white, for total of 3 lead wires)
CP3 : Positive common, connector, lead wire length 3000 mm [118 in.] (black, red, white, for total of 3 lead wires)
PA : Positive common A type, lead wire length 300 mm [11.8 in.]※
PA3 : Positive common A type, lead wire length 3000 mm [118 in.]※
PB : Positive common B type, lead wire length 300 mm [11.8 in.]※
PB3 : Positive common B type, lead wire length 3000 mm [118 in.]※
PC : Positive common C type, lead wire length 300 mm [11.8 in.]※
PC3 : Positive common C type, lead wire length 3000 mm [118 in.]※
CM : Negative common, connector lead wire length 300 mm [11.8 in.]※
CM3: Negative common, connector lead wire length 3000 mm [118 in.]※
MA : Negative common A type, lead wire length 300 mm [11.8 in.]※
MA3: Negative common A type, lead wire length 3000 mm [118 in.]※
MB : Negative common B type, lead wire length 300 mm [11.8 in.]※
MB3: Negative common B type, lead wire length 3000 mm [118 in.]※
MC : Negative common C type, lead wire length 300 mm [11.8 in.]※
MC3: Negative common C type, lead wire length 3000 mm [118 in.]※
※A common connector assembly.

JAZ0 - P - □ (for single use only)

Valve specification
For **T0/T1**

IP Specification

Connector specification
CP : Positive common, connector, lead wire length 300 mm [11.8 in.] (black, red, for total of 2 lead wires)
CP3 : Positive common, connector, lead wire length 3000 mm [118 in.] (black, red, for total of 2 lead wires)
PA : Positive common A type, lead wire length 300 mm [11.8 in.]※
PA3 : Positive common A type, lead wire length 3000 mm [118 in.]※
PB : Positive common B type, lead wire length 300 mm [11.8 in.]※
PB3 : Positive common B type, lead wire length 3000 mm [118 in.]※
PC : Positive common C type, lead wire length 300 mm [11.8 in.]※
PC3 : Positive common C type, lead wire length 3000 mm [118 in.]※
CM : Negative common, connector lead wire length 300 mm [11.8 in.]※
CM3: Negative common, connector lead wire length 3000 mm [118 in.]※
MA : Negative common A type, lead wire length 300 mm [11.8 in.]※
MA3: Negative common A type, lead wire length 3000 mm [118 in.]※
MB : Negative common B type, lead wire length 300 mm [11.8 in.]※
MB3: Negative common B type, lead wire length 3000 mm [118 in.]※
MC : Negative common C type, lead wire length 300 mm [11.8 in.]※
MC3: Negative common C type, lead wire length 3000 mm [118 in.]※
※A common connector assembly.

Connector-related order codes

※For details, see p. 22.

JAZ □ - □

Valve specification
Blank:
T1, T2, T3 T4,T5,TA,
For **TB/TC**
0: For **T0**

Connector type
CP : Positive common/connector, lead wire length 300 mm [11.8 in.]
CP3 : Positive common/connector, lead wire length 3000 mm [118 in.]
CPN : Positive common/connector, no lead wire (with shorting bar and contact)
PA : Positive common A type, lead wire length 300 mm [11.8 in.]※
PA3 : Positive common A type, lead wire length 3000 mm [118 in.]※
PB : Positive common B type, lead wire length 300 mm [11.8 in.]※
PB3 : Positive common B type, lead wire length 3000 mm [118 in.]※
PC : Positive common C type, lead wire length 300 mm [11.8 in.]※
PC3 : Positive common C type, lead wire length 3000 mm [118 in.]※
CMN : Negative commonconnector, no lead wire (with shorting bar and contact)
CM : Negative common, connector lead wire length 300 mm [11.8 in.]※
CM3 : Negative common, connector lead wire length 3000 mm [118 in.]※
MA : Negative common A type, lead wire length 300 mm [11.8 in.]※
MA3 : Negative common A type, lead wire length 3000 mm [118 in.]※
MB : Negative common B type, lead wire length 300 mm [11.8 in.]※
MB3 : Negative common B type, lead wire length 3000 mm [118 in.]※
MC : Negative common C type, lead wire length 300 mm [11.8 in.]※
MC3 : Negative common C type, lead wire length 3000 mm [118 in.]※

● Common connector assembly

A type: **JAZ-PA □**※

Red common wire (+)
Black A side (-)
White B side (-) (Insert when using as double solenoid)Note

B type: **JAZ-PB □**※

Red common wire (+)
Black A side (-)
White B side (-) (Insert when using as double solenoid)Note

C type: **JAZ-PC □**※

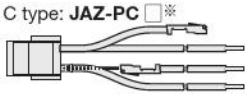

Red common wire (+)
Black A side (-)
White B side (-) (Insert when using as double solenoid)Note
Red common wire (+)

※ Lead wire length **Blank:** 300 mm [11.8 in.]
3: 3000 mm [118 in.]

Note: White lead wire is not available for **JAZ0-P□□**.

● For negative common

A type: **JAZ-MA□**※

Black common wire (-)
Red A side (+)
White B side (+) (Insert when using as double solenoid)

B type: **JAZ-MB□**※

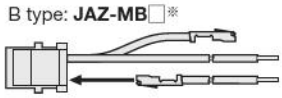

Black common wire (-)
Red A side (+)
White B side (+) (Insert when using as double solenoid)

C type: **JAZ-MC□**※

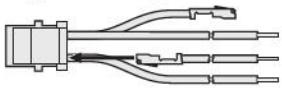

Black common wire (-)
Red A side (+)
White B side (+) (Insert when using as double solenoid)
Black common wire (-)

Single negative common plug connector unit
Type: **JAZ-CM□**※

※ Lead wire length **Blank:** 300 mm [11.8 in.]
3: 3000 mm [118 in.]

FZ - □

Valve specification
T1,T2,T3
T4,T5,TA
For **TB/TC**

Connector specification
CC1.5: Cabtyre cable, length 1500 mm [59 in.]※
CC3 : Cabtyre cable, length 3000 mm [118 in.]※

Notes:
1. When the valve specification is **T1**, select the **JAZ0-P-** □ single dedicated type.
2. When switching between the single and double type (**T1**/**T2**), purchase and use a dedicated connector for single or double use (the number of seal holes in the lead wire differs for the single and double type).
3. There is no white lead wire for the **JAZ0-P-** □ .
4. It is necessary to disassemble the connector to add a common connector assembly. Contact your nearest KOGANEI sales office.
5. For information on use in locations/atmospheres subject to substances other than water, such as organic solvents, cutting oil, or reagents, contact your nearest KOGANEI sales office.
6. For information on replacing the waterproof seal, contact your nearest KOGANEI sales office.

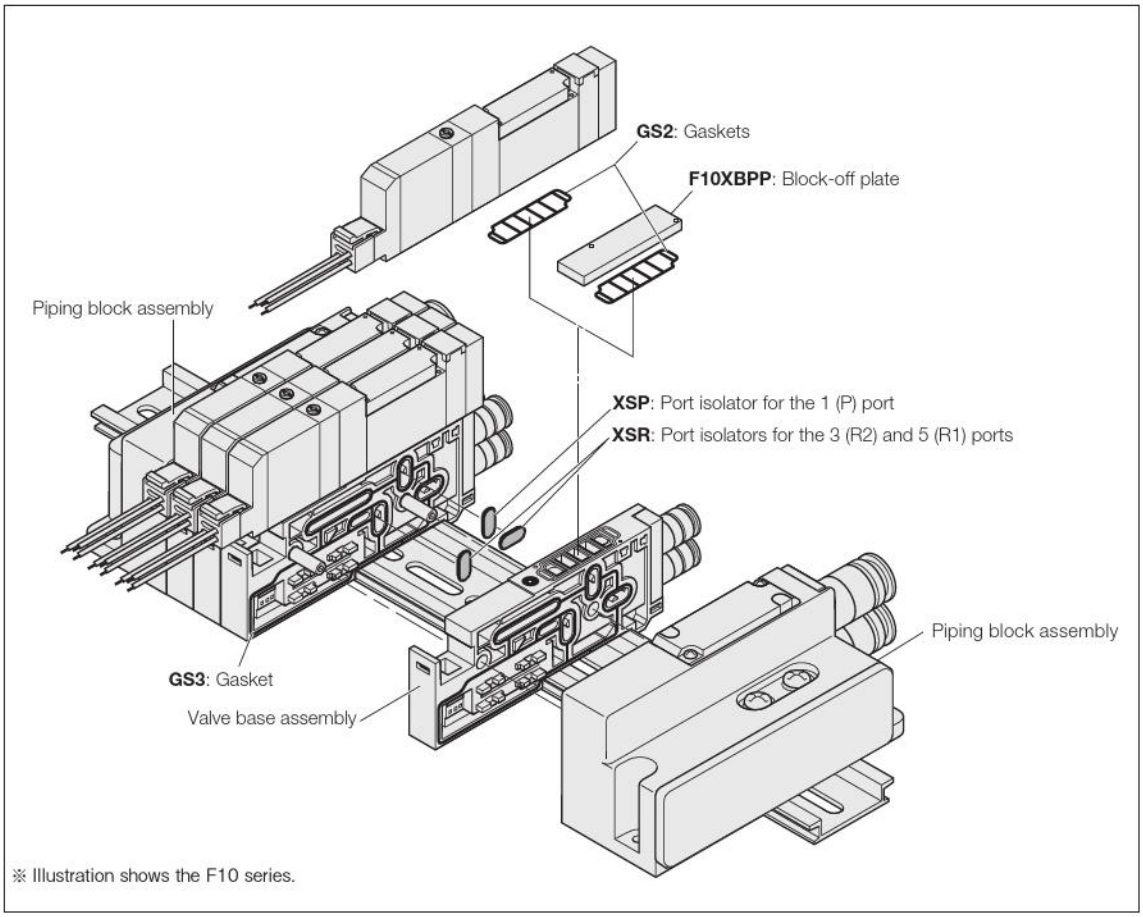

Manifold Order Code Example

(4 units of F15 Series)

F15M4XNJ-J6T-DR

stn.1 ~ 2 F15T0-A1-PS DC24V
stn.3 F15ZX-PJ6-TN
stn.4 F15T0-A1-PS DC24V

Note: This order code example has no relationship to the illustration above.

Precautions for Order Codes

●Orders for valves only

Place orders from "Single Valve Unit Order Codes" on p. 162.
However, **Blank**, **A2□**, **F3**, **F4□**, **F5**, **F6**, **F4A□**, **F4B□**, **F5A**, **F5B**, **F6A**, and **F6B** cannot be selected for the valve outlet type. And for the wiring specification, **Blank**, **PL**, and **PL3** cannot be selected. In addition, for common terminal wiring connections, separately order the common connector assemblies listed on the left.

F15 Series Easy Assembly Type Manifold Plug-in Type Order Codes

■ Manifold outlet specification

With dual use fitting blocks (base piping type)

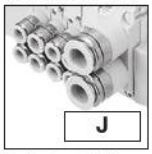

Outlet port fitting
F15: ϕ6, ϕ8

With selectable fittings (base piping type)

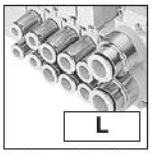

Outlet port should be selected in accordance with the manifold fitting specification.

With female thread blocks (base piping type)

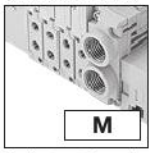

Outlet port female thread
F15: Rc1/8

With plates (direct piping type)

■ Pilot type

Blank
Internal pilot manifold

G
External pilot manifold

■ Piping block specification (air supply and exhaust)

Fitting block
-JR: Dual use fitting, right-side mounting
-JL: Dual use fitting, left-side mounting
-JD: Dual use fitting, both-side mounting
Fitting size (1(P), 3, 5(R) ports), ϕ8, ϕ10

Female thread block
-MR: Female thread, right-side mounting
-ML: Female thread, left-side mounting
-MD: Female thread, both-side mounting
Female thread size (1(P), 3, 5(R) ports), Rc1/4

Female thread block
-MRH: Female thread, right-side mounting[Note15]
-MLH : Female thread, left-side mounting[Note15]
-MDH: Female thread,both-side mounting[Note15]
Female thread size (1(P), 3, 5(R) ports), NPT1/4

Single size fitting block
-J5R : Single use fitting, right-side mounting
-J5L : Single use fitting, left-side mounting
-J5D : Single use fitting, both-side mounting
Fitting size (1(P), 3, 5(R) ports), ϕ8
-J6R : Single use fitting, right-side mounting
-J6L : Single use fitting, left-side mounting
-J6D : Single use fitting, both-side mounting
Fitting size (1(P), 3, 5(R) ports), ϕ10

Intermediate piping block
-JT : Dual use fitting, both-side mounting, intermediate piping block ϕ8, ϕ10
-J5T : Single use fitting, both-side mounting, intermediate piping block ϕ8
-J6T : Single use fitting, both-side mounting, intermediate piping block ϕ10
-MT : Female thread, both-side mounting, intermediate piping block Rc1/4
-MTH : Female thread, both-side mounting, intermediate piping block NPT1/4[Note15]

■ Wiring specification (wiring block)

※ All wiring blocks are mounted on the left.

Flat cable connector (with socket and strain relief)

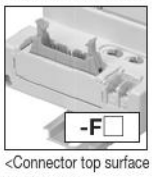

<Connector top surface wiring>
-F100 : 10-pin
-F100N: 10-pin without power terminal
-F101 : 10-pin
-F101N: 10-pin without power terminal
-F200 : 20-pin
-F200N: 20-pin without power terminal
-F201 : 20-pin
-F201N: 20-pin without power terminal
-F260 : 26-pin
-F260N: 26-pin without power terminal

<Connector side surface wiring>
-F100E : 10-pin
-F100EN: 10-pin without power terminal
-F101E : 10-pin
-F101EN: 10-pin without power terminal
-F200E : 20-pin
-F200EN: 20-pin without power terminal
-F201E : 20-pin
-F201EN: 20-pin without power terminal
-F260E : 26-pin
-F260EN: 26-pin without power terminal

For details, see p. 47.

D-sub connector

<Connector top surface wiring>
(M2.6 mounting screws)
-D250 : 25-pin[Note14]
-D250N : 25-pin without power terminal[Note14]
-D251 : 25-pin[Note14]
-D251N: 25-pin without power terminal[Note14]
(4-40 UNC mounting screws)
-D250U : 25-pin[Note15]
-D251U: 25-pin[Note15]
-D370NU : 37-pin without power terminal[Note15]

<Connector side surface wiring>
(M2.6 mounting screws)
-D250E : 25-pin[Note14]
-D250EN: 25-pin without power terminal[Note14]
-D251E : 25-pin[Note14]
-D251EN : 25-pin without power terminal[Note14]
(4-40 UNC mounting screws)
-D250EU : 25-pin[Note15]
-D251EU: 25-pin[Note15]

For details, see p. 47.

Terminal block
(19 terminals, M3 screws)

For details, see p.47.

■ Wiring connection specification

Blank
Packed wiring:
Specification of the valve base is always in accordance with the mounted valve specifications.

-W
Double wiring:
Valve base is always double wiring, regardless of the specifications of the mounted valve.

■ Common specification

Blank: Positive common
-CM : Negative common

■ Mounting specification

Blank
Direct mounting

-DN
With DIN bracket (no rail)

-DR
With DIN bracket, with rail
Caution: For information on rails assembled and shipped, see p. 132 and 136.

■ Valve size

F15M 15 mm [0.591 in.] width

■ Valve size

F15 Standard type

F15L Low-current type

Valve size	Valve units	Manifold type	Manifold outlet specification	Pilot specification	Piping block specification	Wiring specification	Wiring connection specification	Common specification	Mounting specification	Voltage
Manifold model										
Base piping type	F15M	XP (※Rc)	J M	Blank G	-JR -J5R -JT -JL -J5L -J5T -JD -J5D -J6T -MR -J6R -MT -ML -J6L -MD -J6D	-F100 -F260 -F101E -D250E -F100N -F260N -F101EN -D250EN -F101 -D250 -F200E -D251E -F101N -D250N -F200EN -D251EN -F200 -D251 -F201E -T200 -F200N -D251N -F201EN -F201 -F100E -F260E -F201N -F100EN -F260EN	Blank -W	Blank -CM	Blank -DN -DR	DC24V DC12V[Note2]
Base piping type selectable fitting	F15M	2 ⋮ □ Note1	XP (※Rc) XPH (※NPT) Note13	L	Blank G	-JR[Note14] -MRH[Note15] -J6L[Note14] -JL[Note14] -MLH[Note15] -J5D[Note14] -JD[Note14] -MDH[Note15] -J6D[Note14] -MR[Note14] -J5R[Note14] -MTH[Note15] -ML[Note14] -J6R[Note14] -MD[Note14] -J5L[Note14]	-F100 -F260N -F100EN -D250E[Note14] -F100N -D250[Note14] -F101E -D250EN[Note14] -F101 -D250N[Note14] -F101EN -D251E[Note14] -F101N -D251[Note14] -F200E -D251EN[Note14] -F200 -D251N[Note14] -F200EN -D250EU[Note15] -F200N -D250U[Note15] -F201E -D251EU[Note15] -F201 -D251U[Note15] -F201EN -T200 -F201N -D370NU[Note15] -F260E -F260 -F100E -F260EN	Blank -W	Blank -CM	Blank -DN -DR	DC24V DC12V[Note2]
Direct piping type	F15M	2 ⋮ □ Note1	XP (※Rc) XPH (※NPT) Note13	Blank	Blank G	-JR[Note14] -MRH[Note15] -J6L[Note14] -JL[Note14] -MLH[Note15] -J5D[Note14] -JD[Note14] -MDH[Note15] -J6D[Note14] -MR[Note14] -J5R[Note14] -MTH[Note15] -ML[Note14] -J6R[Note14] -MD[Note14] -J5L[Note14]	-F100 -F260N -F100EN -D250E[Note14] -F100N -D250[Note14] -F101E -D250EN[Note14] -F101 -D250N[Note14] -F101EN -D251E[Note14] -F101N -D251[Note14] -F200E -D251EN[Note14] -F200 -D251N[Note14] -F200EN -D250EU[Note15] -F200N -D250U[Note15] -F201E -D251EU[Note15] -F201 -D251U[Note15] -F201EN -T200 -F201N -D370NU[Note15] -F260E -F260 -F100E -F260EN	Blank -W	Blank -CM	Blank -DN -DR	DC24V DC12V[Note2]

Notes: 1. For the maximum number of units, see the table for maximum number of valve units by wiring specification, on p. 208.
2. Not available in low-current type.
3. Valve mounting location is from the left, with the solenoid on top, and the 4(A), 2(B) ports side in front.
4. When selecting **J**, **M**, or **L** (base piping type) for the manifold outlet specification, always enter **-A1** (with plate) for the valve outlet type.

Valve type

T0: 2-position, for single solenoid only
T1: 2-position, single solenoid specification
T2: 2-position, double solenoid specification
T3: 3-position, closed center
T4: 3-position, exhaust center
T5: 3-position, pressure center
TA: Tandem 3-port (NC and NC)[Note10]
TB: Tandem 3-port (NO and NO)[Note10]
TC: Tandem 3-port (NC and NO)[Note10]

Operation type

Blank
Internal pilot type[Note8]

G
External pilot type[Note9]
(for positive pressure)
※ No vacuum valve can be mounted.

Manual override

Manual override button

Manual override lever[Note6]

Valve type

-A1 With plate[Note4] (base piping type)

5-port specification

-FJ With dual use fitting block for different diameter sizes (direct piping type) **F15**: $\phi6/\phi8$
-FJ5 With single use fitting block (direct piping type) **F15**: $\phi6$
-FJ6 With single use fitting block (direct piping type) **F15**: $\phi8$
-FM With female thread block (direct piping type) **F15**: Rc1/8
-FMH With female thread block[Note15] (direct piping type) **F15**: NPT1/8

3-port specification

-FJ5A With single use fitting block, normally closed (NC) (direct piping type) **F15**: $\phi6$
-FJ5B With single use fitting block, normally open (NO) (direct piping type) **F15**: $\phi6$
-FJ6A With single use fitting block, normally closed (NC) (direct piping type) **F15**: $\phi8$
-FJ6B With single use fitting block, normally open (NO) (direct piping type) **F15**: $\phi8$
-FMA With female thread block, normally closed (NC) (direct piping type) **F15**: Rc1/8
-FMAH With female thread block, normally closed (NC)[Note15] (direct piping type) **F15**: NPT1/8
-FMB With female thread block, normally open (NO) (direct piping type) **F15**: Rc1/8
-FMBH With female thread block, normally open (NO)[Note15] (direct piping type) **F15**: NPT1/8

Caution: The 3-port specifications are only available in the valve specification **T0**, **T1**, and **T2**.

Manifold fitting specification

5-port specification

-J5 With single use fitting block (base piping type) **F15**: $\phi6$
-J6 With single use fitting block (base piping type) **F15**: $\phi8$
-M With female thread block (base piping type) **F15**: Rc1/8
-MH With female thread block[Note15] (base piping type) **F15**: NPT1/8

3-port specification

-J5A With single use fitting block, normally closed (NC) (base piping type) **F15**: $\phi6$
-J5B With single use fitting block, normally open (NO) (base piping type) **F15**: $\phi6$
-J6A With single use fitting block, normally closed (NC) (base piping type) **F15**: $\phi8$
-J6B With single use fitting block, normally open (NO) (base piping type) **F15**: $\phi8$
-MA With female thread block, normally closed (NC) (base piping type) **F15**: Rc1/8
-MAH With female thread block, normally closed (NC)[Note15] (base piping type) **F15**: NPT1/8
-MB With female thread block, normally open (NO) (base piping type) **F15**: Rc1/8
-MBH With female thread block, normally open (NO)[Note15] (base piping type) **F15**: NPT1/8

Caution: The 3-port specifications are only available in the valve specification **T0**, **T1**, and **T2**.

Back pressure prevention valve

Blank
No back pressure prevention valve

-E2
With back pressure prevention valve[Note11]

Individual air supply and exhaust spacer

Blank: No spacer
-XPP6 : Single intake spacer (with $\phi6$ joint for F15)
-XPP8 : Single intake spacer (with $\phi8$ joint for F15)
-XPR6 : Single exhaust spacer (with $\phi6$ joint for F15)
-XPR8 : Single exhaust spacer (with $\phi8$ joint for F15)
For details, see p.27.

Port isolator

Blank: No port isolator
-XSP: For 1(P) port[Note7]
-XSR: For 3(R2), 5(R1) ports[Note7]
-XSA: For 1(P), 3(R2), and 5(R1) ports[Note7]

Block-off plate wiring specification

Blank: Double wiring
-S: Single wiring

Station	Valve size	Valve specifications	Operation type	Manual override	Valve outlet type	Manifold fitting specification	Back pressure prevention valve	Individual air supply and exhaust spacer	Port isolator	Voltage / Block-off plate wiring specification
Valve type included										
stn. 1 . . stn. □ Note3	F15 F15L	T0 T1 T2 T3 T4 T5 TA[Note10] TB[Note10] TC[Note10]	Blank[Note8] G[Note9]	Blank -R[Note6]	-A1[Note4]	Blank -E2[Note11]	Blank -XPP6 -XPR6 -XPP8 -XPR8	Blank -XSP[Note7] -XSR[Note7] -XSA[Note7]	DC24V DC12V[Note2]	
	F15	XBPP (for block-off plate)[Note5]								Blank -S
	When selecting the intermediate piping block, see page 106 when specifying it.									
stn. 1 . . stn. □ Note3	F15 F15L	T0 T1 T2 T3 T4 T5 TA[Note10] TB[Note10] TC[Note10]	Blank[Note8] G[Note9]	Blank -R[Note6]	-A1[Note4]	-J5[Note12] -J6[Note12] -M[Note12] -MH[Note15] -J5A[Note12] -J5B[Note12] -J6A[Note12] -J6B[Note12] -MA[Note12] -MAH[Note15] -MB[Note12] -MBH[Note15]	Blank -E2[Note11]	Blank -XPP6 -XPR6 -XPP8 -XPR8	Blank -XSP[Note7] -XSR[Note7] -XSA[Note7]	DC24V DC12V[Note2]
	F15	XBPP (for block-off plate)[Note5]								Blank -S
	When selecting the intermediate piping block, see page 106 when specifying it.									
stn. 1 . . stn. □ Note3	F15 F15L	T0 T1 T2 T3 T4 T5 TA[Note10] TB[Note10] TC[Note10]	Blank[Note8] G[Note9]	Blank -R[Note6]	-FJ[Note12] -FJ5[Note12] -FJ6[Note12] -FM[Note12] -FMH[Note15] -FJ5A[Note12] -FJ5B[Note12] -FJ6A[Note12] -FJ6B[Note12] -FMA[Note12] -FMAH[Note15] -FMB[Note12] -FMBH[Note15]	Blank -E2[Note11]	Blank -XPP6 -XPR6 -XPP8 -XPR8	Blank -XSP[Note7] -XSR[Note7] -XSA[Note7]	DC24V DC12V[Note2]	
	F15	XBPP (for block-off plate)[Note5]								Blank -S
	When selecting the intermediate piping block, see page 206 when specifying it.									

Notes:
5. Select the block-off plate wiring in the block-off plate wiring connection specification.
6. When the valve specification is **T1** or **T2**, the manual override lever is placed only on the A side.
7. Port isolators can be installed only when piping blocks are mounted on both sides. In addition, only 1 port isolator can be mounted in 1 manifold for **-XSA**, or 1 each port isolator for **-XSP** and **-XSR** for a total of 2 locations. When shipping, the designated port isolators are mounted between the designated station and the station to its immediate left (the next smaller stn. No.).
8. Cannot be mounted on the external pilot manifold.
9. Cannot be mounted on the internal pilot manifold.
10. Not available in external pilot type.
11. Not available with the individual exhaust spacer.
12. The 3-port specifications are only available in the valve specification **T0**, **T1**, and **T2**.
13. Only L or Blank is available in the inch female thread specification and the manifold outlet specification.
14. Can be selected only when the manifold type is **XP**.
15. Can be selected only when the manifold type is **XPH**.

Intermediate piping block

(When mounting an intermediate piping block to the manifold, complete the following type and specify the station specified on page 205.)

F 15 ZX□ - □ - TK - □

Valve size
15: 15 mm [0.591 in.] width

Pilot specification
Blank: Internal pilot
G: External pilot

Piping block Specification[Note]
PJ : With dual use fitting ϕ8, ϕ10
PJ5 : With single use fitting ϕ8
PJ6 : With single use fitting ϕ10
PM : With female thread Rc 1/4
PMH : With female thread NPT 1/4

Manifold type
TK: For plug-in type

Port isolator
Blank: Internal pilot
XSP: Port isolator (1(P) port)
XSR: Port isolator (3(R2), 5(R1) ports)
XSA: Port isolator (1(P), 3(R2), and 5(R1) ports)

Note:See the following table for combinations of intermediate piping block port specifications and manifold piping block specifications.

Manifold piping specifications	Intermediate piping block
JT	PJ
J5T	PJ5
J6T	PJ6
MT	PM
MTH	PMH

F15 Series Easy Assembly Type Manifold Plug-in Type Additional Parts Order Codes

Parts for manifold

F 15 ZX - □

Valve size
15: 15 mm [0.591 in.] width

Parts content
GS2: Gasket (gasket and exhaust valve)
GS3: Gasket (valve base side)
XSP: Port isolator (for 1(P) port)
XSR: Port isolator (for 3(R2), 5(R1) ports)
XSA: Port isolator (for 1(P), 3(R2), 5(R1) ports)
DN : DIN mounting bracket (one set of two)

Block-off plate (block-off plate, 2 mounting screws, and plug)

F 15 XBP P

Valve size
15: 15 mm [0.591 in.] width

For plug-in type

Valve base assembly (valve base, gasket, and 2 connecting rods for adding)

F 15 ZX - □ - □ - □ *For use with both internal pilot and external pilot

Valve size
15: 15 mm [0.591 in.] width

Common specification
Blank: For positive common
CM: For negative common

Wiring specification
S : For single wiring
W : For double wiring

Piping specifications
VJ : Dual use fitting valve base
VJ5 : Single use fitting valve base F15: ϕ6
VJ6 : Single diameter fitting valve base F15: ϕ8
VJ5A : 3-port specification normally closed, single use fitting valve base F15: ϕ6
VJ5B : 3-port specification normally open, single use fitting valve base F15: ϕ6
VJ6A : 3-port specification normally closed, single use fitting valve base F15: ϕ8
VJ6B : 3-port specification normally open, single use fitting valve base F15: ϕ8
VM : Female thread valve base F15: Rc1/8
VMA : 3-port specification normally closed, female thread valve base F15: Rc1/8
VMB : 3-port specification normally open, female thread valve base F15: Rc1/8
VMH : Female thread valve base F15: NPT1/8
VMAH : 3-port specification normally closed, female thread valve base F15: NPT1/8
VMBH : 3-port specification normally open, female thread valve base F15: NPT1/8
VP : Valve base plate

Back pressure prevention valve (2 pieces for split type, with dedicated gasket)

F 15 Z - E2

Valve size
15: 15 mm [0.591 in.] width

Individual air supply and exhaust spacer (Spacer for plug-in type, gasket, exhaust valve, and 2 mounting screws)

F 15 ZX - □

Valve size
15: 15 mm [0.591 in.] width

Specification
XPP6: Single intake spacer (with ϕ6 joint for F15)
XPP8: Single intake spacer (with ϕ8 joint for F15)
XPR6: Single exhaust spacer (with ϕ6 joint for F15)
XPR8: Single exhaust spacer (with ϕ8 joint for F15)

※For details, see p.27.

Muffler

KM - J □

Fitting size
6: Outer diameter ϕ6 (for piping block)
8: Outer diameter ϕ8 (for piping block)
10: Outer diameter ϕ10 (for piping block)
(Sales unit: Set of 10 mufflers)

DIN rail

DIN - □ (Unit:1)

Rail length
125: 125mm [4.921 in.]
⋮ (25 mm [0.984 in.] pitch)
525: 525mm [20.669 in.]

Piping block assembly (plug-in)

F 15 ZX□ - □ - □ - □ - □

Valve size
15: 15 mm [0.591 in.] width

Port isolator[Note2]
Blank: No port isolator
XSP: Port isolator (1(P) port)
XSR: Port isolator (3(R2), 5(R1) ports)
XSA: Port isolator (1(P), 3(R2), and 5(R1) ports)

Mounting specification[Note3]
Blank: Without DIN bracket
DN: With DIN bracket

Pilot specification
Blank: Internal pilot
G: External pilot

Manifold type
LK : Left side piping block (for plug-in type) with circuit board
RN : Right piping block, without circuit board
TK : Intermediate piping block (for plug-in type) with circuit board

Piping block Specification[Note1]
PJ : With dual use fitting ϕ8, ϕ10
PJ5: With single use fitting ϕ8
PJ6: With single use fitting ϕ10
PM : With female thread Rc 1/4
PMH : With female thread NPT 1/4
PP : Plate (without fitting)

Notes: 1. The fitting of the piping block is included. One set of two connecting rods is also included for a LN and TN type manifold.
2. Port isolator selection only available when the piping block name is TK.
3. Only when the manifold type is LK or RN.

Connecting rod (1 set of 2)

F 15 ZX - □ - □

Valve size
15: 15 mm [0.591 in.] width

Number of units
01 ~ 20: When type for valve base (RV) is selected
01: When type for left side piping block (RH) is selected
01: When type for intermediate piping block (RC) is selected

Specification
RV: For valve base
RH: For left piping block
RC: For intermediate piping block

Wiring block assembly (1 set)

FZX - □ - □

Common specification
Blank: Positive common
CM: Negative common

Wiring specification
F100 : Flat cable connector (DC specification)
F101 : Flat cable connector (DC specification)
F200 : Flat cable connector (DC specification)
F201 : Flat cable connector (DC specification)
F260 : Flat cable connector (DC specification)
D250 : D-sub connector (M2.6 screws)
D251 : D-sub connector (M2.6 screws)
F100N : Flat cable connector (DC specification), without power terminal
F101N : Flat cable connector (DC specification), without power terminal
F200N : Flat cable connector (DC specification), without power terminal
F201N : Flat cable connector (DC specification), without power terminal
F260N : Flat cable connector (DC specification), without power terminal
D250N : D-sub connector, without power terminal (M2.6 screws)
D251N : D-sub connector, without power terminal (M2.6 screws)
D250U : D-sub connector, (4-40UNC screws)
D250NU : D-sub connector, without power terminal (4-40UNC screws)
D251U : D-sub connector, (4-40UNC screws)
D251NU : D-sub connector, without power terminal (4-40UNC screws)
D370NU : D-sub connector, without power terminal (4-40UNC screws)
T200 : Terminal block, for left-side mounting

※ The above flat cable connectors and D-sub connectors can be switched between the top and side type.

■ Table for maximum number of valve units by wiring specification

		Maximum number of units ※	
		Wiring connection specification	
Wiring specification	Max. outputs	Packed wiring (Blank)	Double wiring (-W)
F100 □ Flat cable (10P)	8	Varies depending on the number of mounted single solenoids, double solenoids, and block-off plates. The number of controlled solenoids should be designated as the maximum number of outputs or less. D370NU is a maxmum of 20 units.	4 units
F101 □ Flat cable (10P)	8		4 units
F200 □ Flat cable (20P)	16		8 units
F201 □ Flat cable (20P)	16		8 units
F260 □ Flat cable (26P)	20		10 units
D250 □ D-sub connector (25P)	16		8 units
D251 □ D-sub connector (25P)	20		10 units
D370NU D-sub connector (37P)	32		16 units
T200 Terminal block (19 terminals)	18		9 units

※Note : When the intermediate piping block is selected, the maximum number of units will be added +1.

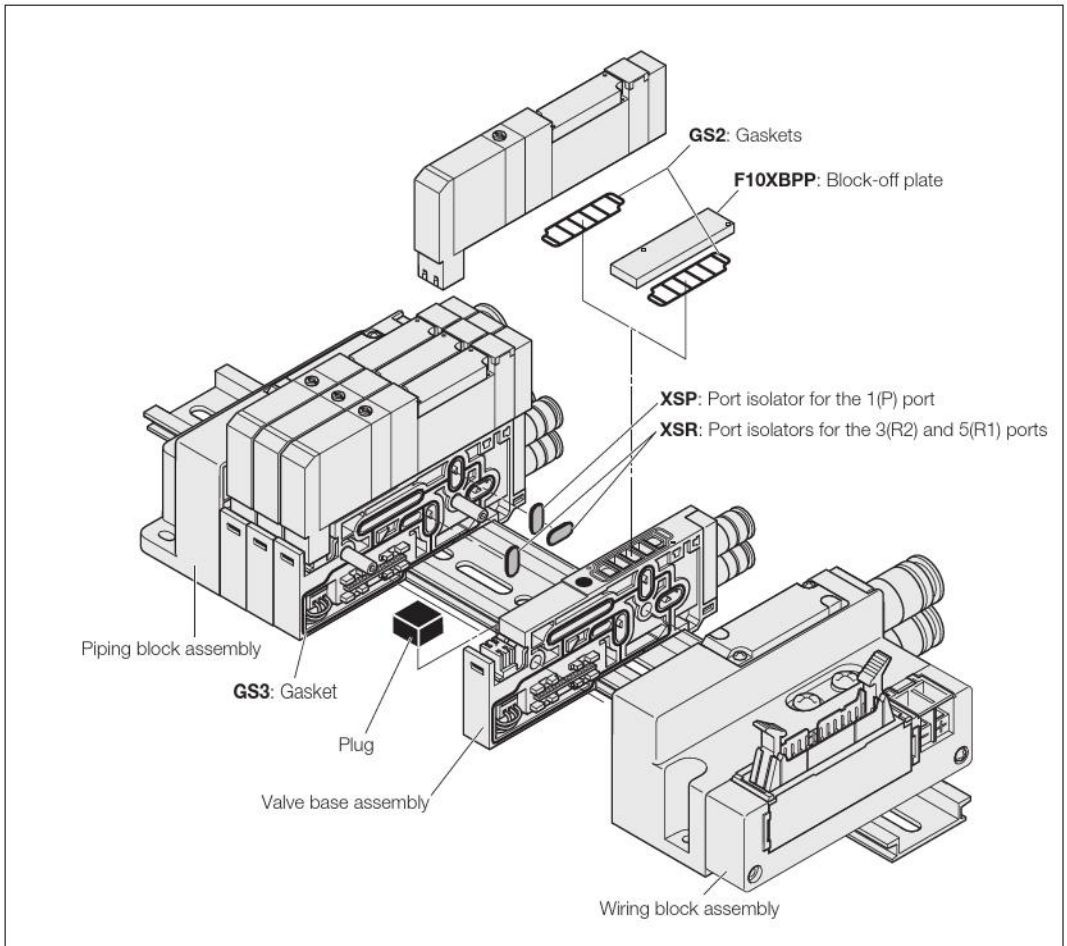

※ Illustration shows the F10 series.

Manifold Order Code Example

(12 units of F15 Series)

F15M12XPL-J6T-F201-DR DC24V

stn.1 ~ 8 F15T1-A1-J5 DC24V
stn.9 F15ZX-PJ6-TK
stn.10 ~ 12 F15T1-A1-J5 DC24V

Note:This order code example has no relationship to the illustration above.

Precautions for Order Codes

● **Orders for valves only**

Place orders from "Single Valve Unit Order Codes" on p. 162.
However, **Blank**, **A2□, F3, F4□, F5, F6, F4A□, F4B□, F5A, F5B, F6A, or F6B** cannot be selected for the valve outlet type. For the wiring specification, **Blank** is the only selection.

● **Wiring connection specification**

Blank (packed wiring): Wiring is made in accordance with the mounted valve specifications.
-W (double wiring): Wiring is always for the double solenoid, regardless of the specifications of the mounted valve.

Caution

Single or double can also be selected as the block-off plate wiring specification separately from the manifold (valve) wiring specification.

F15 Series Easy Assembly Type Manifold Serial Transmission Type Order Codes

■ Manifold outlet specification

With dual use fitting blocks (base piping type)

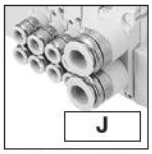

J

Outlet port fitting
F15: $\phi 6/\phi 8$

With selectable fittings (base piping type)

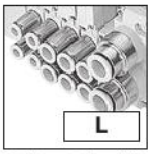

L

Outlet port should be selected in accordance with the manifold fitting specification.

With female thread blocks (base piping type)

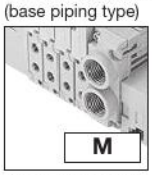

M

Outlet port female thread
F15: Rc1/8

With plates (direct piping type)

Blank

■ Pilot specification

Blank

Internal pilot manifold

G

External pilot manifold

■ Piping block specification (air supply and exhaust)

Fitting block
-JR: Dual use fitting, right-side mounting
-JL: Dual use fitting, left-side mounting
-JD: Dual use fitting, both-side mounting
Fitting size (1(P), 3, 5(R) ports), $\phi 8$, $\phi 10$

Female thread block
-MR: Female thread, right-side mounting
-ML: Female thread, left-side mounting
-MD: Female thread, both-side mounting
Female thread size (1(P), 3, 5(R) ports), Rc1/4

Female thread block
-MRH: Female thread, right-side mounting Note13
-MLH: Female thread, left-side mounting Note13
-MDH: Female thread,both-side mounting Note13
Female thread size (1(P), 3, 5(R) ports), NPT1/4

Single use fitting block
-J5R: Single use fitting, right-side mounting
-J5L: Single use fitting, left-side mounting
-J5D: Single use fitting, both-side mounting
Fitting size (1(P), 3, 5(R) ports), $\phi 8$

-J6R: Single use fitting, right-side mounting
-J6L: Single use fitting, left-side mounting
-J6D: Single use fitting, both-side mounting
Fitting size (1(P), 3, 5(R) ports), $\phi 10$

Intermediate piping block
-JT: Dual use fitting, both-side mounting, intermediate piping block $\phi 8$, $\phi 10$
-J5T: Single use fitting, both-side mounting, intermediate piping block $\phi 8$
-J6T: Single use fitting, both-side mounting, intermediate piping block $\phi 10$
-MT: Female thread, both-side mounting, intermediate piping block Rc1/4
-MTH: Female thread, both-side mounting, intermediate piping block NPT1/4 Note13

■ Transmission block specification

※ All transmission blocks are left-side mounting
※ These are the serial transmission block specifications compatible with each system.

●Block on the right photo is the case of B7A Link Terminal.
For details, see p. 41-44.

Integrated type
-A1: For OMRON CompoBus/S (16 outputs)
-B1: For CC-Link (16 outputs) Note2
-B3: For CC-Link (32 outputs) Note2
-D1: For DeviceNet (16 outputs)
-D3: For DeviceNet (32 outputs)
-H1: For CompoNet (16 outputs)
-K1: For EtherCAT (16 outputs)
-K3: For EtherCAT (32 outputs)
-M1: For EtherNet/IP (16 outputs) Note2
-M3: For EtherNet/IP (32 outputs) Note2

■ Wiring connection specification

Blank

Packed wiring: Specification of the valve base is always in accordance with the mounted valve specifications.

-W

Double wiring: Valve base is always double wiring, regardless of the specifications of the mounted valve.

■ Mounting specification

Blank

Direct mounting

-DN

With DIN bracket (no rail)

-DR

With DIN bracket, with rail
Caution: For information on rails assembled and shipped, see p. 249 and 250.

■ Valve size

F15M 15 mm [0.591 in.] width

■ Valve size

F15 Standard type

F15L Low-current type

Valve size	Valve units	Manifold type	Manifold outlet specification	Pilot specification	Piping block specification	Transmission block specification	Wiring connection specification	Mounting specification
Manifold type								
Base piping type	F15M	XS (※Rc)	J M	Blank G	-JR -J5R -JT -JL -J5L -J5T -JD -J5D -J6T -MR -J6R -MT -ML -J6L -MD -J6D	-A1 -D3 -M1 Note2 -B1 Note2 -H1 -M3 Note2 -B3 Note2 -K1 -D1 -K3	Blank -W	Blank -DN -DR
Base piping type selectable fitting	F15M	2 ⋮ □ Note1	XS (※Rc) XSH (※NPT) Only L or Blank is available in the inch female thread specification and the manifold outlet specification.	L	Blank G	-JR -MLH Note13 -J6D -JL -MDH Note13 -JT -JD -J5R -J5T -MR -J5L -J6T -ML -J5D -MT -MD -J6R -MTH Note13 -MRH Note13 -J6L	-A1 -D3 -M1 Note2 -B1 Note2 -H1 -M3 Note2 -B3 Note2 -K1 -D1 -K3	Blank -W	Blank -DN -DR
Direct piping type	F15M	2 ⋮ □ Note1	XS (※Rc) XSH (※NPT) Only L or Blank is available in the inch female thread specification and the manifold outlet specification.	Blank	Blank G	-JR -MLH Note13 -J6D -JL -MDH Note13 -JT -JD -J5R -J5T -MR -J5L -J6T -ML -J5D -MT -MD -J6R -MTH Note13 -MRH Note13 -J6L	-A1 -D3 -M1 Note2 -B1 Note2 -H1 -M3 Note2 -B3 Note2 -K1 -D1 -K3	Blank -W	Blank -DN -DR

Notes 1. To determine the maximum number of units, see the table for maximum number of valve units by transmission block specification, on p. 214.
2. Complies with the CE marking regulation.

Valve specification

T0 : 2-position, for single solenoid only
T1 : 2-position, single solenoid specification
T2 : 2-position, double solenoid specification
T3 : 3-position, closed center
T4 : 3-position, exhaust center
T5 : 3-position, pressure center
TA : Tandem 3-port (NC and NC)[Note10]
TB : Tandem 3-port (NO and NO)[Note10]
TC : Tandem 3-port (NC and NO)[Note10]

Operation type

Blank
Internal pilot type[Note8]

G
External pilot type[Note9]
(for positive pressure)
※ No vacuum valve can be mounted.

Manual override

Manual override button

Manual override lever[Note6]

Valve outlet type

-A1 With plate[Note4] (base piping type)

5-port specification

-FJ With dual use fitting block (direct piping type) **F15:** $\phi6$, $\phi8$
-FJ5 With single use fitting block (direct piping type) **F15:** $\phi6$
-FJ6 With single use fitting block (direct piping type) **F15:** $\phi8$
-FM With female thread block (direct piping type) **F15:** Rc1/8
-FMH With female thread block[Note13] (direct piping type) **F15:** NPT1/8

3-port specification

-FJ5A With single use fitting block, normally closed (NC) (direct piping type) **F15:** $\phi6$
-FJ5B With single use fitting block, normally open (NO) (direct piping type) **F15:** $\phi6$
-FJ6A With single use fitting block, normally closed (NC) (direct piping type) **F15:** $\phi8$
-FJ6B With single use fitting block, normally open (NO) (direct piping type) **F15:** $\phi8$
-FMA With female thread block, normally closed (NC) (direct piping type) **F15:** Rc1/8
-FMAH With female thread block, normally closed (NC)[Note13] (direct piping type) **F15:** NPT1/8
-FMB With female thread block, normally open (NO) (direct piping type) **F15:** Rc1/8
-FMBH With female thread block, normally open (NO)[Note13] (direct piping type) **F15:** NPT1/8

Caution: The 3-port specifications are only available in the valve specification **T0**, **T1**, and **T2**.

Manifold fitting specification

5-port specification

-J5 With single use fitting block (base piping type) **F15:** $\phi6$
-J6 With single use fitting block (base piping type) **F15:** $\phi8$
-M With female thread block (base piping type) **F15:** Rc1/8
-MH With female thread block[Note13] (base piping type) **F15:** NPT1/8

3-port specification

-J5A With single use fitting block, normally closed (NC) (base piping type) **F15:** $\phi6$
-J5B With single use fitting block, normally open (NO) (base piping type) **F15:** $\phi6$
-J6A With single use fitting block, normally closed (NC) (base piping type) **F15:** $\phi8$
-J6B With single use fitting block, normally open (NO) (base piping type) **F15:** $\phi8$
-MA With female thread block, normally closed (NC) (base piping type) **F15:** Rc1/8
-MAH With female thread block, normally closed (NC)[Note13] (base piping type) **F15:** NPT1/8
-MB With female thread block, normally open (NO) (base piping type) **F15:** Rc1/8
-MBH With female thread block, normally open (NO)[Note13] (base piping type) **F15:** NPT1/8

Caution: The 3-port specifications are only available in the valve specification **T0**, **T1**, and **T2**.

Port isolator

Blank: No port isolator
-XSP: For 1 (P) port[Note7]
-XSR: For 3(R2), 5(R1) ports[Note7]
-XSA:For 1(P), 3(R2), and 5(R1)[Note7]

Back pressure prevention valve

Blank
No back pressure prevention valve

-E2
With back pressure prevention valve[Note11]

Individual air supply and exhaust spacer

Blank: Without spacer
-XPP6 : Single intake spacer (with Ø6 joint for F15)
-XPP8 : Single intake spacer (with Ø8 joint for F15)
-XPR6 : Single exhaust spacer (with Ø6 joint for F15)
-XPR8 : Single exhaust spacer (with Ø8 joint for F15)

For details, see p.27.

Block-off plate wiring specification

Blank: Double wiring
-S: Single wiring

Station	Valve Size	Valve specification	Operation type	Manual override	Valve outlet type	Manifold fitting specification	Back pressure prevention valve	Individual air supply and exhaust spacer	Port isolator	Voltage / Block-off plate wiring specification
Mounting valve model										
stn. 1 ⋮ stn.□ Note3	F15 F15L	T0 T3 TA[Note10] T1 T4 TB[Note10] T2 T5 TC[Note10]	Blank[Note8] G[Note9]	Blank -R[Note6]	-A1[Note4]		Blank -E2[Note11]	Blank -XPP6 -XPR6 -XPP8 -XPR8	Blank -XSP[Note7] -XSR[Note7] -XSA[Note7]	DC24V Blank -S
	F15	XBPP (for block-off plate)[Note3]								
	When selecting the intermediate piping block, see page 112 when specifying it.									
stn. 1 ⋮ stn.□ Note3	F15 F15L	T0 T3 TA[Note10] T1 T4 TB[Note10] T2 T5 TC[Note10]	Blank[Note8] G[Note9]	Blank -R[Note6]	-A1[Note4]	-J5[Note12] -J6A[Note12] -J6[Note12] -J6B[Note12] -M[Note12] -MA[Note12] -MH[Note13] -MAH[Note13] -J5A[Note12] -MB[Note12] -J5B[Note12] -MBH[Note13]	Blank -E2[Note11]	Blank -XPP6 -XPR6 -XPP8 -XPR8	Blank -XSP[Note7] -XSR[Note7] -XSA[Note7]	DC24V Blank -S
	F15	XBPP (for block-off plate)[Note3]								
	When selecting the intermediate piping block, see page 112 when specifying it.									
stn. 1 ⋮ stn.□ Note3	F15 F15L	T0 T3 TA[Note10] T1 T4 TB[Note10] T2 T5 TC[Note10]	Blank[Note8] G[Note9]	Blank -R[Note6]	-FJ[Note12] -FJ6A[Note12] -FJ5[Note12] -FJ6B[Note12] -FJ6[Note12] -FMA[Note12] -FM[Note12] -FMAH[Note13] -FMH[Note13] -FMB[Note12] -FJ5A[Note12] -FMBH[Note13] -FJ5B[Note12]		Blank -E2[Note11]	Blank -XPP6 -XPR6 -XPP8 -XPR8	Blank -XSP[Note7] -XSR[Note7] -XSA[Note7]	DC24V Blank -S
	F15	XBPP (for block-off plate)[Note5]								
	When selecting the intermediate piping block, see page 212 when specifying it.									

Notes: 3. Valve mounting location is from the left, with the solenoid on top, and the 4(A), 2(B) ports side in front.
4. When selecting **J**, **M**, or **L** (base piping type) for the manifold outlet specifications, always enter **-A1** (with plate) for the valve outlet type.
5. Single or double can also be selected as the block-off plate wiring specification separately from the manifold (valve) wiring specification.
6. When the valve specification is **T1** or **T2**, the manual override lever is placed only on the A side.
7. Port isolators can be installed only when piping blocks are mounted on both sides. In addition, only 1 port isolator can be mounted in 1 manifold for **-XSA**, or 1 each port isolator for **-XSP** and **-XSR** for a total of 2 locations. When shipping, the designated port isolators are mounted between the designated station and the station to its immediate left (the next smaller stn. No.).
8. Cannot be mounted on the external pilot manifold.
9. Cannot be mounted on the internal pilot manifold.
10. Not available in external pilot type.
11. Not available with the individual exhaust spacer.
12. The 3-port specifications are only available in the valve specification **T0**, **T1**, and **T2**.
13. Can be selected only when the manifold type is **XSH**.

Intermediate piping block

(When mounting an intermediate piping block to the manifold, complete the following type and specify the station specified on page 211.)

F 15 ZX□ - □ - TK - □

Valve size
15: 15 mm
[0.591 in.] width

Pilot specification
Blank: Internal pilot
G: External pilot type

Piping block Specification[Note]
PJ : With dual use fitting ϕ8, ϕ10
PJ5 : With single use fitting ϕ8
PJ6 : With single use fitting ϕ10
PM : With female thread Rc 1/4
PMH : With female thread NPT 1/4

Manifold type
TK: Plug-in type, for serial transmission

Port isolator
Blank : Without split
XSP : Port isolator (1(P) port)
XSR : Port isolator (3(R2), 5(R1) ports)
XSA : Port isolator (1(P), 3(R2), and 5(R1) ports)

Note:See the following table for combinations of intermediate piping block port specifications and manifold piping block specifications.

Manifold piping specifications	Intermediate piping block
JT	PJ
J5T	PJ5
J6T	PJ6
MT	PM
MTH	PMH

Parts for manifold

F 15 ZX - □

Valve size
15: 15 mm [0.591 in.] width

Parts content
GS2 : Gasket (gasket and exhaust valve)
GS3 : Gasket (valve base side)
XSP : Port isolator (for 1(P) port)
XSR : Port isolator (for 3(R2), 5(R1) ports)
XSA : Port isolator (for 1(P), 3(R2), 5(R1) ports)
DN : DIN mounting bracket (one set of two)

Block-off plate (block-off plate, 2 mounting screws, and plug)

F 15 XBPP

Valve size
15: 15 mm [0.591 in.] width

Back pressure prevention valve (2 units for split type, with dedicated gasket)

F 15 Z - E2

Valve size
15: 15 mm [0.591 in.] width

Individual air supply and exhaust spacer (Spacer for plug-in type, gasket, exhaust valve, and 2 mounting screws)

F 15 ZX - □

Valve size
15: 15 mm [0.591 in.] width

Specifications
XPP6: Single intake spacer (with ϕ6 joint for F15)
XPP8: Single intake spacer (with ϕ8 joint for F15)
XPR6: Single exhaust spacer (with ϕ6 joint for F15)
XPR8: Single exhaust spacer (with ϕ8 joint for F15)

※For details, see p.27.

Valve base assembly (valve base, gasket, and 2 connecting rods for adding)

F 15 ZX - □ - □ - □ ※For use with both internal pilot and external pilot

Valve size
15: 15 mm [0.591 in.] width

Wiring specification
S : For single wiring
W : For double wiring

Common specification
Blank: For positive common

Piping specification
VJ : Dual use fitting valve base
VJ5 : Single use fitting valve base F15: ϕ6
VJ6 : Single diameter fitting valve base F15: ϕ8
VJ5A : 3-port specification normally closed, single use fitting valve base F15: ϕ6
VJ5B : 3-port specification normally open, single use fitting valve base F15: ϕ6
VJ6A : 3-port specification normally closed, single use fitting valve base F15: ϕ8
VJ6B : 3-port specification normally open, single use fitting valve base F15: ϕ8
VM : Female thread valve base F15: Rc1/8
VMA : 3-port specification normally closed, female thread valve base F15: Rc1/8
VMB : 3-port specification normally open, female thread valve base F15: Rc1/8
VMH : Female thread valve base F15: NPT1/8
VMAH : 3-port specification normally closed, female thread valve base F15: NPT1/8
VMBH : 3-port specification normally open, female thread valve base F15: NPT1/8
VP : Valve base plate

Muffler

KM - J □

Fitting size
6: Outer diameter ϕ6 (for piping block)
8: Outer diameter ϕ8 (for piping block)
10: Outer diameter ϕ10 (for piping block)
(Sales unit: Set of 10 mufflers)

Connecting rod (1 set of 2)

F 15 ZX - □ - □

Valve size
15: 15 mm [0.591 in.] width

Specification
RV : For valve base
RH : For left piping block
RC : For intermediate piping block

Number of units
01 ~ 20: When type for valve base (RV) is selected
01 : When type for left side piping block (RH) is selected
01 : When type for intermediate piping block (RC) is selected

Piping block assembly (plug-in)

F 15 ZX □ - □ - □ - □ - □

Valve size
15: 15 mm [0.591 in.] width

Pilot specification
Blank: Internal pilot
G: External pilot

Piping block Specification[Note1]
PJ : With dual use fitting ϕ8, ϕ10
PJ5: With single use fitting ϕ8
PJ6: With single use fitting ϕ10
PM : With female thread Rc 1/4
PMH : With female thread NPT 1/4
PP : Plate (without fitting)

Manifold type
LK : Left side piping block (for plug-in type) with circuit board
RN : Right piping block, without circuit board
TK : Intermediate piping block (for plug-in type) with circuit board

Port isolator[Note2]
Blank: No port isolator
XSP: Port isolator (1(P) port)
XSR: Port isolator (3(R2), 5(R1) ports)
XSA: Port isolator (1(P), 3(R2), and 5(R1) ports)

Mounting specification[Note3]
Blank: Without DIN bracket
DN: With DIN bracket

DIN rail

DIN - □ (Unit:1)

Rail length
125: 125mm [4.921 in.]
⋮ (25 mm [0.984 in.] pitch)
525: 525mm [20.669 in.]

Notes: 1. The fitting of the piping block is included. One set of two connecting rods is also included for a LN and TN type manifold.
2. Port isolator selection only available when the piping block name is TK.
3. Only when the manifold type is LK or RN.

Serial transmission block (single unit)

YS6 □ (dedicated for manifold mounting)

Transmission block specification
B1: For CC-Link (16 outputs)
B3: For CC-Link (32 outputs)
D1: For DeviceNet (16 outputs)
D3: For DeviceNet (32 outputs)
H1: For CompoNet (16 outputs)

YS7 □ L (dedicated for manifold mounting)

Wiring position
L: Left-side mounting

Transmission block specification
K1: For EtherCAT (16 outputs)
K3: For EtherCAT (32 outputs)
M1: For EtherNet/IP (16 outputs)
M3: For EtherNet/IP (32 outputs)

■ Table for maximum number of valve units by transmission block specification

		Maximum number of units ※	
		Wiring connection specification	
Transmission block specifications	Max. outputs	Packed wiring (Blank)	Double wiring (**-W**)
-B1: For CC-Link (16 outputs)	16	Varies depending on the number of mounted single solenoids, double solenoids, and block-off plates. The number of controlled solenoids should be designated as the maximum number of outputs or less. **-B3**, **-D3**, **-K3**, and **-M3** are a maximum of 20 units.	8 units
-B3: For CC-Link (32 outputs)	32		16 units
-D1: For DeviceNet (16 outputs)	16		8 units
-D3: For DeviceNet (32 outputs)	32		16 units
-H1: For CompoNet (16 outputs)	16		8 units
-K1: For EtherCAT (16 outputs)	16		8 units
-K3: For EtherCAT (32 outputs)	32		16 units
-M1: For EtherNet/IP (16 outputs)	16		8 units
-M3: For EtherNet/IP (32 outputs)	32		16 units

※Note : When the intermediate piping block is selected, the maximum number of units will be added +1.

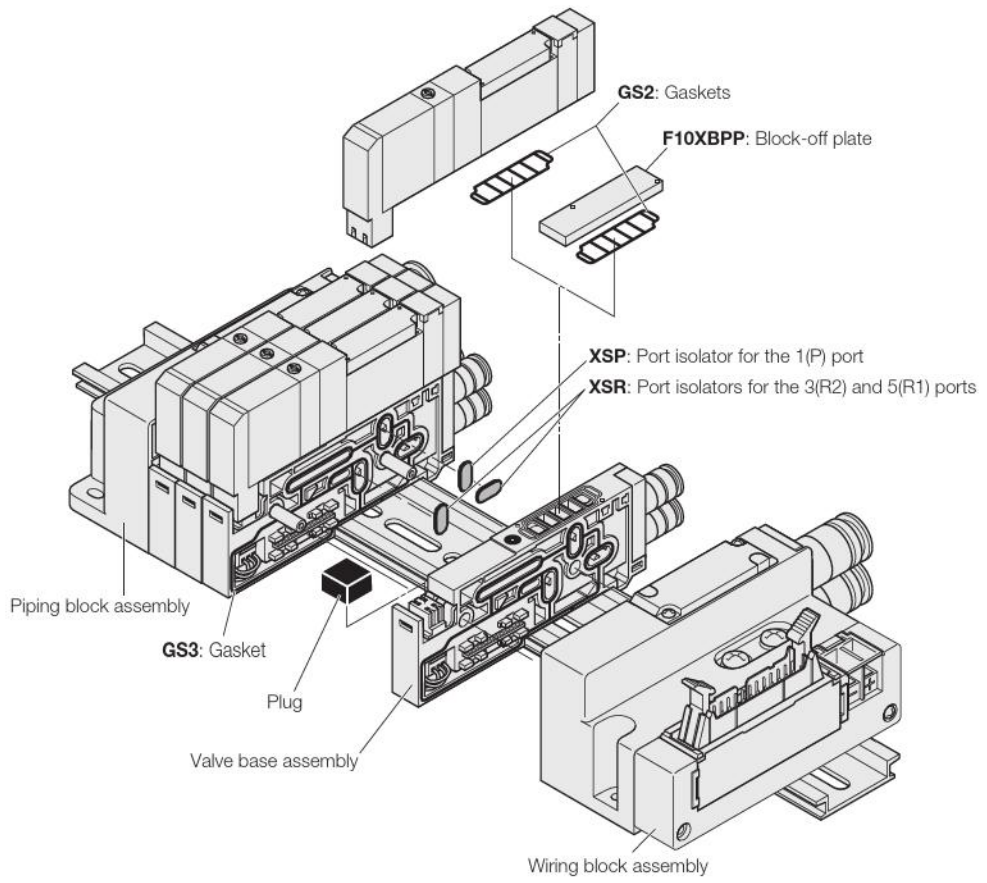

*The illustration is of the F10 Series.

Manifold Order Code Example

(8 units of F15 Series)

F15M8XSL-J5R-B1-W

stn.1 ~ 5 F15T0-A1-J5 DC24V
stn.6 ~ 7 F15T2-A1-J6 DC24V
stn.8 F15XBPP-J6

Note: This order code example has no relationship to the illustration above.

Precautions for Order Codes

● **Orders for valves only**

Place orders from "Single Valve Unit Order Codes" on p. 162.
However, **Blank**, **A2□, F3, F4□, F5, F6, F4A□, F4B□, F5A, F5B, F6A, or F6B** cannot be selected for the valve outlet type. For the wiring specification, Blank is the only selection.

● **Wiring connection specification**

Blank (packed wiring): Wiring is made in accordance with the mounted valve specifications.
-W (double wiring): Wiring is always for the double solenoid, regardless of the specifications of the mounted valve.

Caution

Single or double can also be selected as the block-off plate wiring specification separately from the manifold (valve) wiring specification.

F15T Valve specifications -F3-PS

With outlet port dual use fitting block
With inlet port female thread block
S type plug connector

* For T0 Type dimensions, see p. 217.

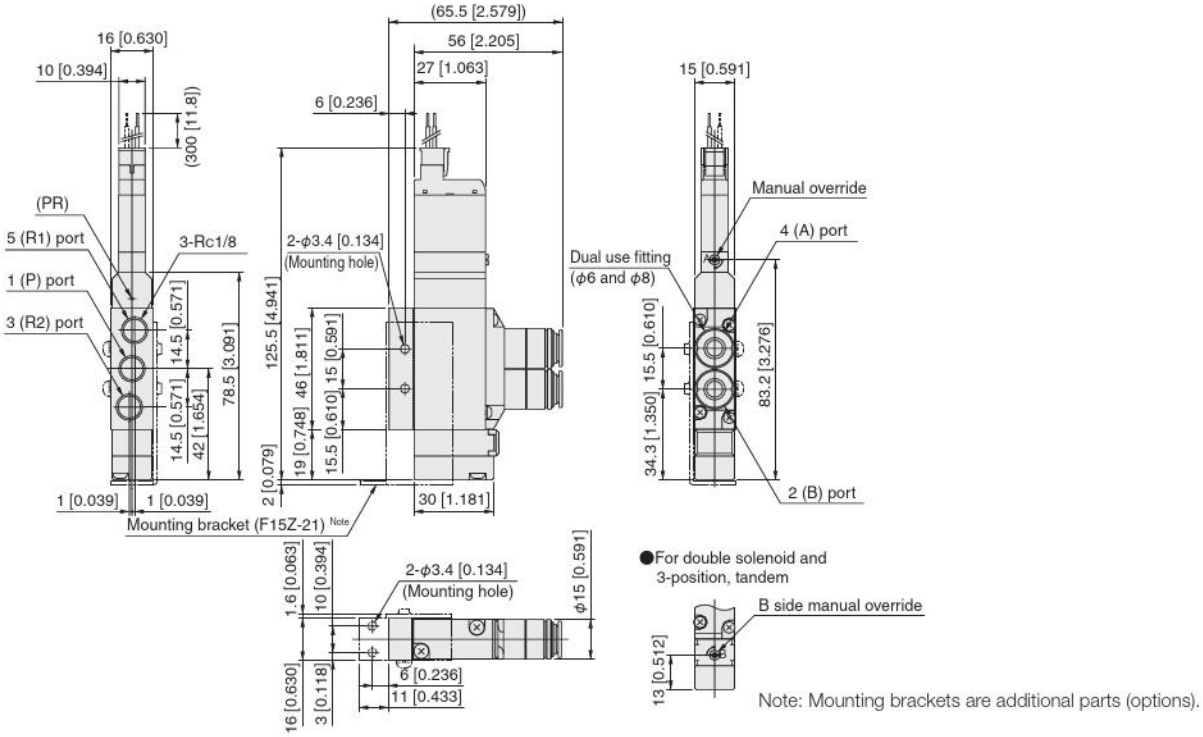

Note: Mounting brackets are additional parts (options).

F15T Valve specifications -F4-PS
F15T Valve specifications -F4H-PS

With outlet port female thread block
With inlet port female thread block
S type plug connector

* For T0 Type dimensions, see p. 217.

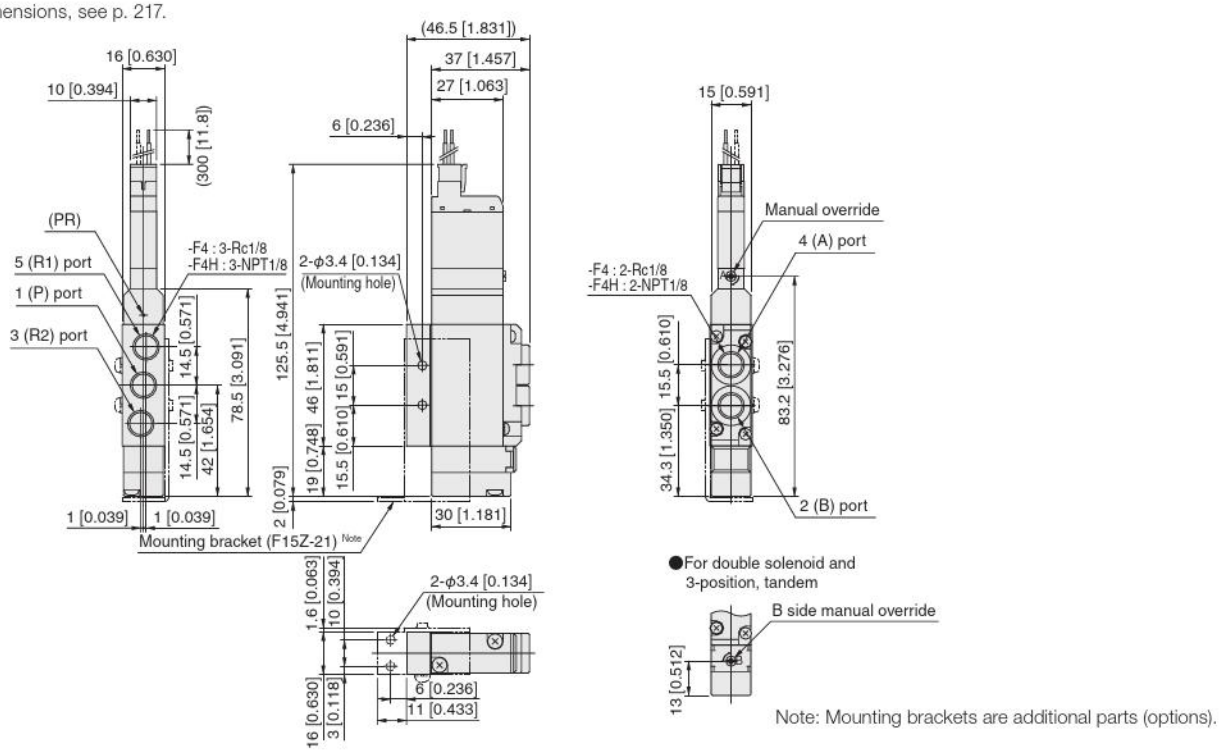

Note: Mounting brackets are additional parts (options).

F15T0-F □ -PS

With outlet port single use fitting block
With inlet port female thread block
S type plug connector

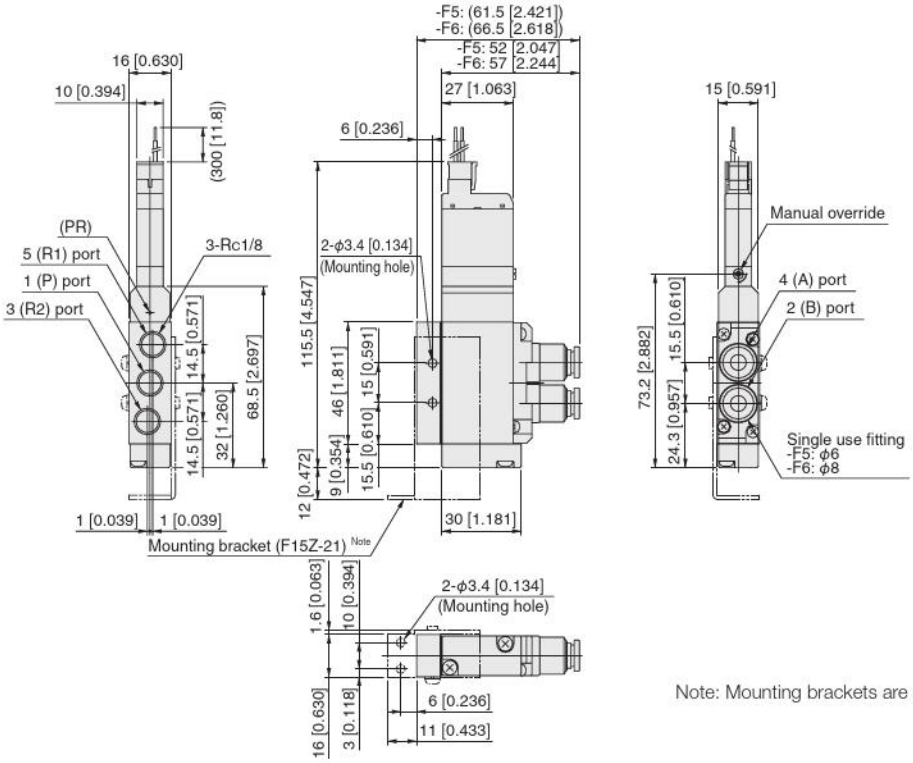

Note: Mounting brackets are additional parts (options).

IP Specifications

F15T Valve specifications Operation system -P-A2-PS

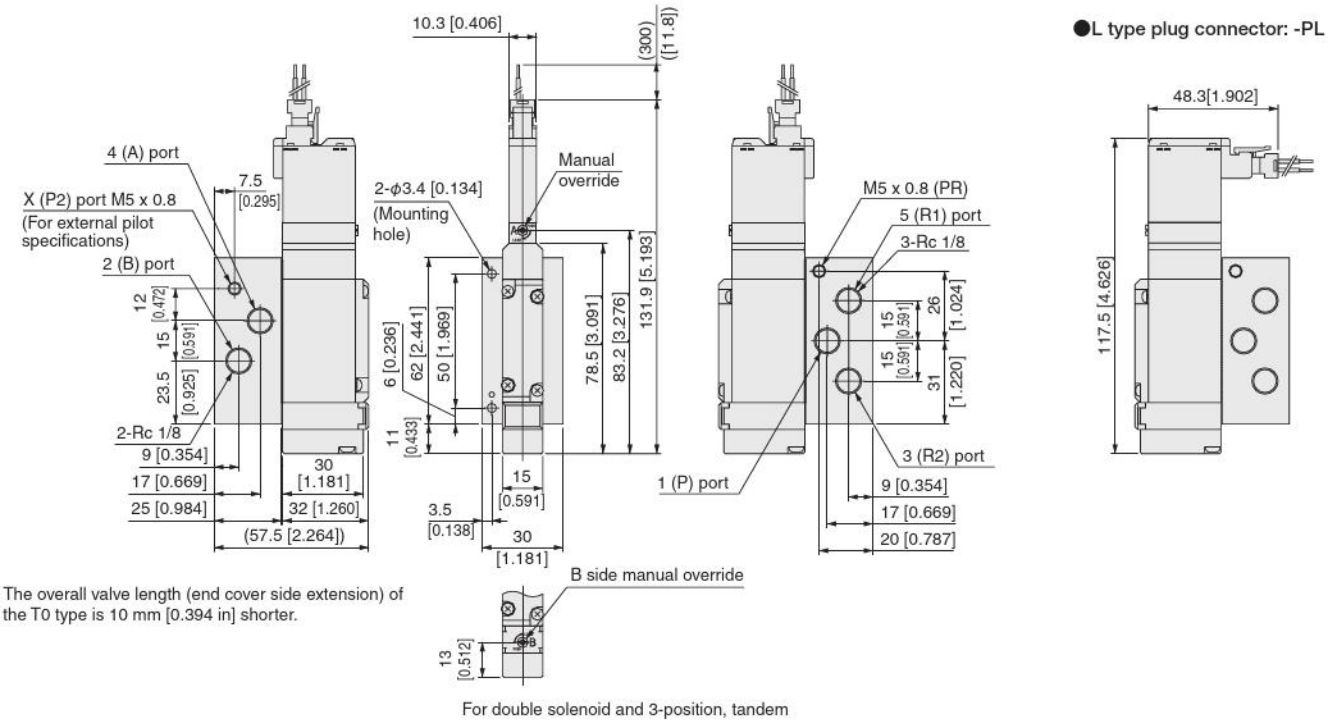

Note: The overall valve length (end cover side extension) of the T0 type is 10 mm [0.394 in] shorter.

F15T Valve specifications Operation system -A2-PS

F15T Valve specifications Operation system -A2H-PS

With A-type sub-base
S type plug connector

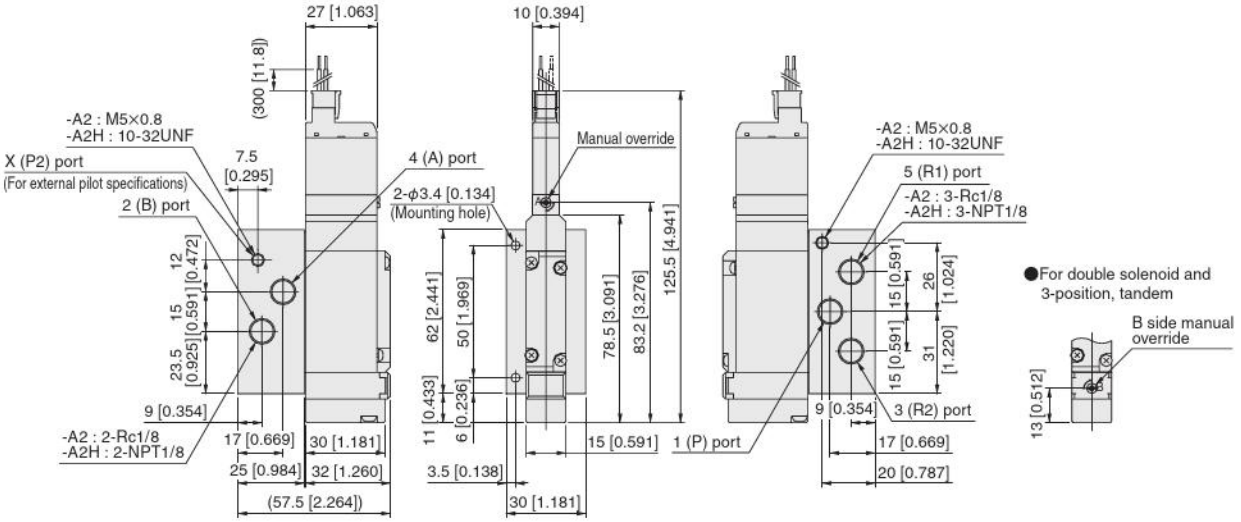

Note: The overall valve length of the T0 type is 10 mm [0.394 in] shorter (end cover side extension is 10 mm [0.394 in] less).

Options

●L-type plug connector: **-PL**

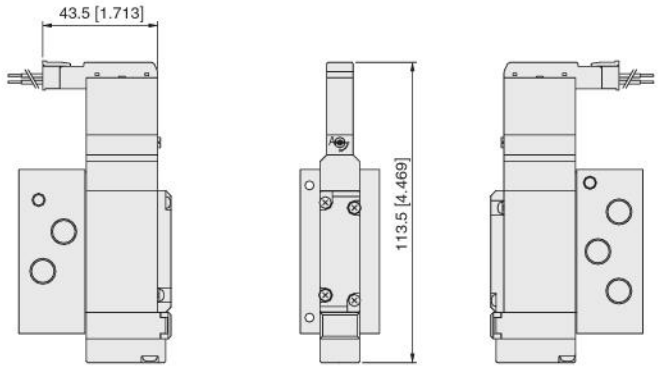

●Manual lever: **-R**

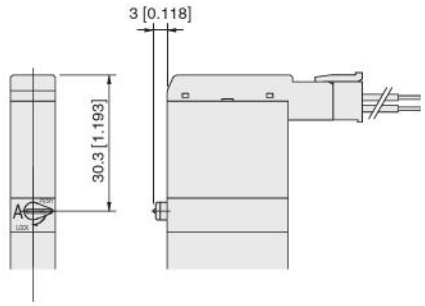

Note: The overall valve length of the T0 type is 10 mm [0.394 in] shorter (end cover side extension is 10 mm [0.394 in] less).

●Solenoid with DIN type connector: **-39□**

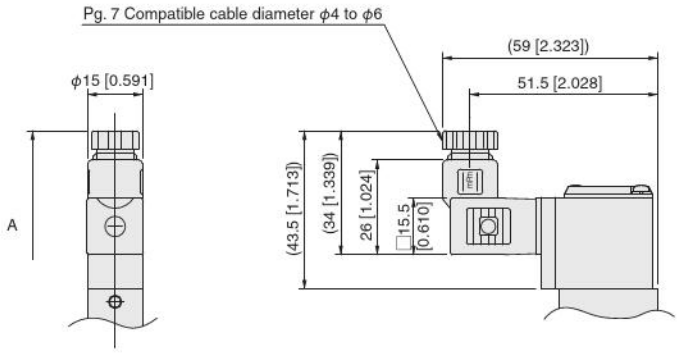

●Protruding lock type manual override: **-83**

Model \ Symbol	A (Full length)
F15T0	117.2 [4.614]
F15T2	170.4 [6.709]
F15T3 to T5	180.4 [7.102]

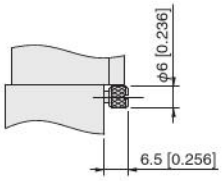

F15M [Number of valves] A J/M/L [Pilot specifications] (Base piping type)

Monoblock manifold A type
With manifold outlet port dual use fitting block
S type plug connector

● Internal pilot specifications

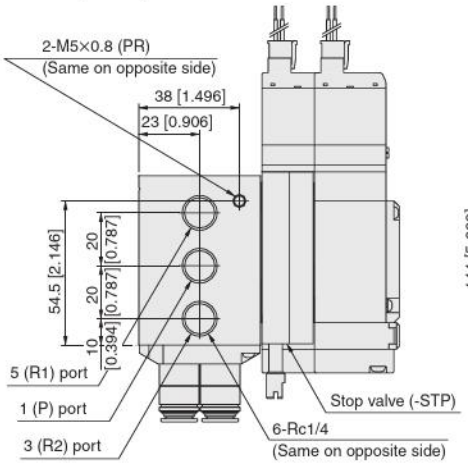

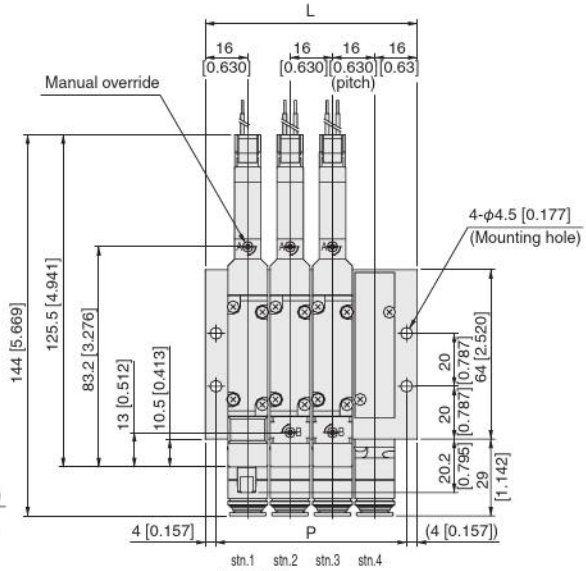

● External pilot specifications

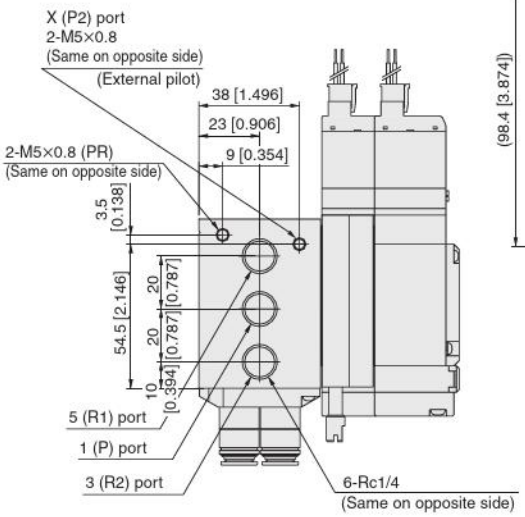

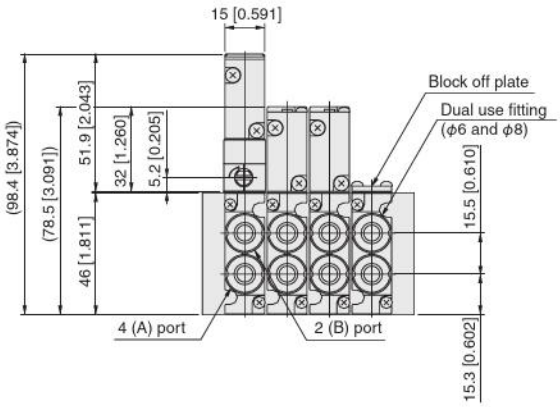

Unit dimensions

Number of units	L	P
2	48 [1.890]	40 [1.575]
3	64 [2.520]	56 [2.205]
4	80 [3.150]	72 [2.835]
5	96 [3.780]	88 [3.465]
6	112 [4.409]	104 [4.094]
7	128 [5.039]	120 [4.724]
8	144 [5.669]	136 [5.354]
9	160 [6.299]	152 [5.984]
10	176 [6.929]	168 [6.614]
11	192 [7.559]	184 [7.244]
12	208 [8.189]	200 [7.874]
13	224 [8.819]	216 [8.504]
14	240 [9.449]	232 [9.134]
15	256 [10.079]	248 [9.764]
16	272 [10.709]	264 [10.394]
17	288 [11.339]	280 [11.024]
18	304 [11.969]	296 [11.654]
19	320 [12.598]	312 [12.283]
20	336 [13.228]	328 [12.913]

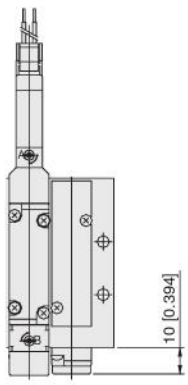

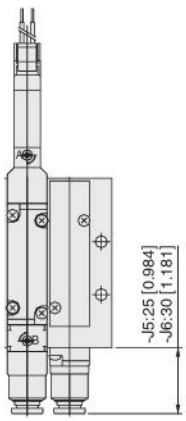

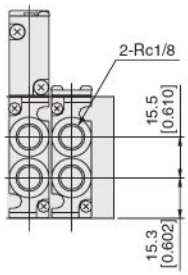

Female thread specifications

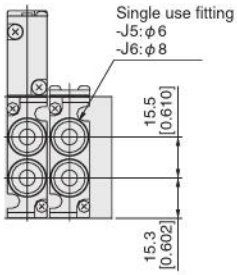

Single use fitting specifications

F15M Number of valves AHL Pilot specifications (Base piping type)

Monoblock manifold A type
With manifold outlet port female thread block
S type plug connector

● Internal pilot specifications

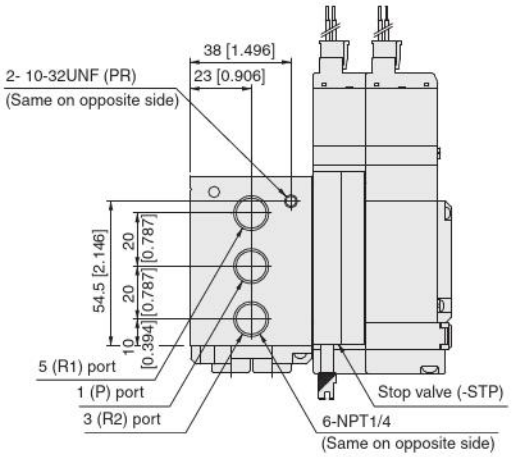

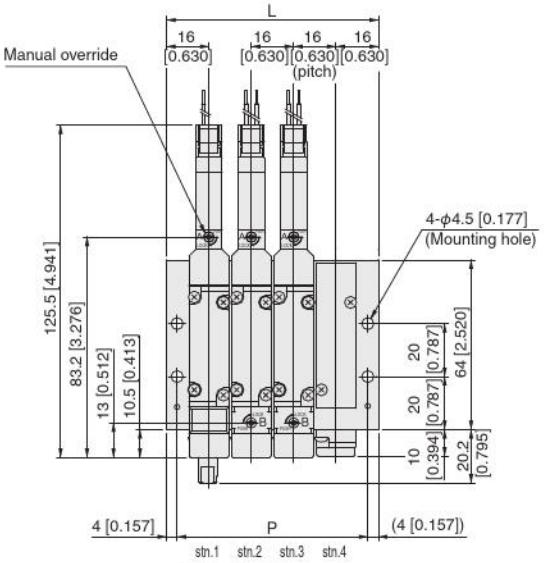

● External pilot specifications

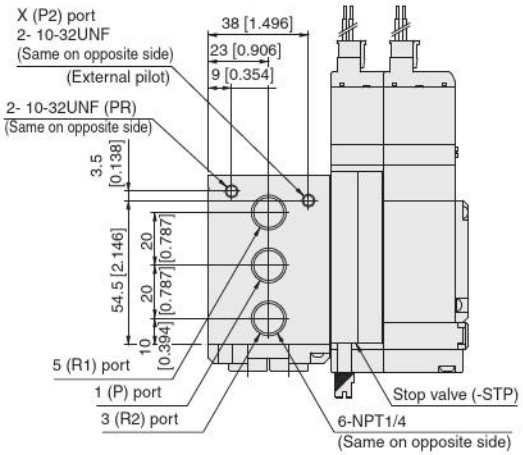

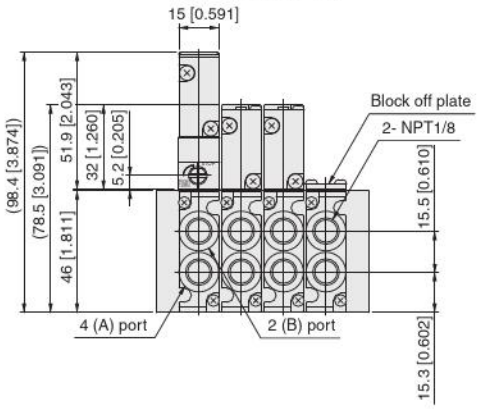

Unit dimensions

Number of units	L	P
2	48 [1.890]	40 [1.575]
3	64 [2.520]	56 [2.205]
4	80 [3.150]	72 [2.835]
5	96 [3.780]	88 [3.465]
6	112 [4.409]	104 [4.094]
7	128 [5.039]	120 [4.724]
8	144 [5.669]	136 [5.354]
9	160 [6.299]	152 [5.984]
10	176 [6.929]	168 [6.614]
11	192 [7.559]	184 [7.244]
12	208 [8.189]	200 [7.874]
13	224 [8.819]	216 [8.504]
14	240 [9.449]	232 [9.134]
15	256 [10.079]	248 [9.764]
16	272 [10.709]	264 [10.394]
17	288 [11.339]	280 [11.024]
18	304 [11.969]	296 [11.654]
19	320 [12.598]	312 [12.283]
20	336 [13.228]	328 [12.913]

F15M [Number of valves] F (Direct piping type)

Monoblock manifold F type
With valve outlet port dual use fitting block
S type plug connector

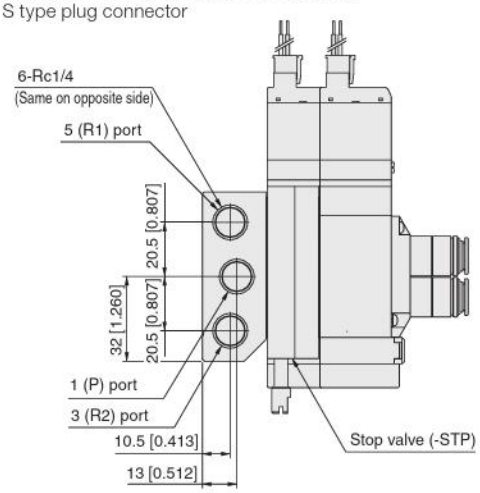

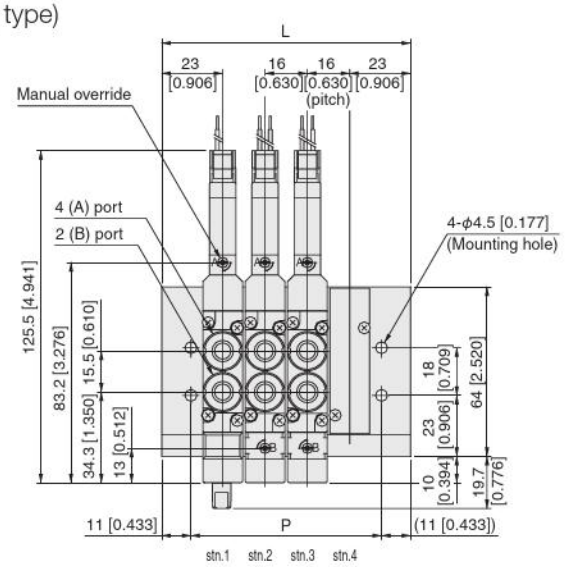

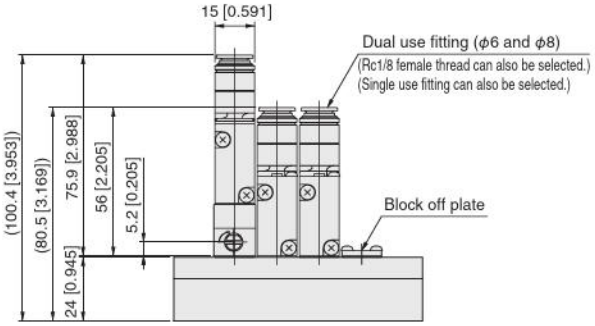

Note: The overall valve length of the T0 type is 10 mm [0.394 in] shorter (end cover side protrusion is 10 mm [0.394 in] less).

Unit dimensions

Number of units	L	P
2	62 [2.441]	40 [1.575]
3	78 [3.071]	56 [2.205]
4	94 [3.701]	72 [2.835]
5	110 [4.331]	88 [3.465]
6	126 [4.961]	104 [4.094]
7	142 [5.591]	120 [4.724]
8	158 [6.220]	136 [5.354]
9	174 [6.850]	152 [5.984]
10	190 [7.480]	168 [6.614]
11	206 [8.110]	184 [7.244]
12	222 [8.740]	200 [7.874]
13	238 [9.370]	216 [8.504]
14	254 [10.000]	232 [9.134]
15	270 [10.630]	248 [9.764]
16	286 [11.260]	264 [10.394]
17	302 [11.890]	280 [11.024]
18	318 [12.520]	296 [11.654]
19	334 [13.150]	312 [12.283]
20	350 [13.780]	328 [12.913]

F15M [Number of valves] FH (Direct piping type)

Monoblock manifold F type
With valve outlet port female thread block
S type plug connector

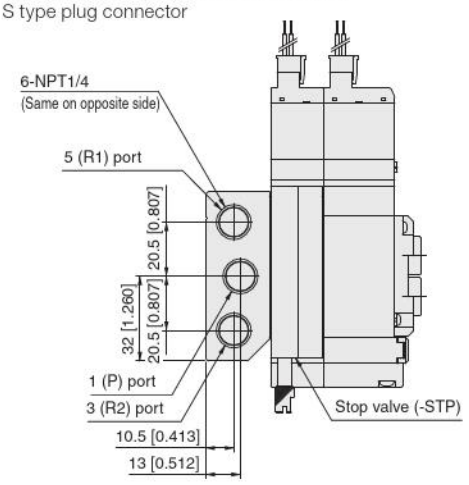

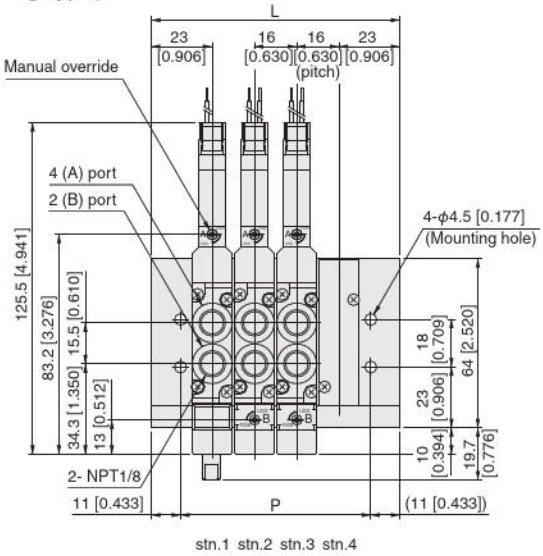

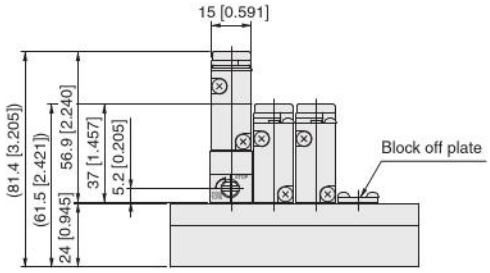

Unit dimensions

Number of units	L	P
2	62 [2.441]	40 [1.575]
3	78 [3.071]	56 [2.205]
4	94 [3.701]	72 [2.835]
5	110 [4.331]	88 [3.465]
6	126 [4.961]	104 [4.094]
7	142 [5.591]	120 [4.724]
8	158 [6.220]	136 [5.354]
9	174 [6.850]	152 [5.984]
10	190 [7.480]	168 [6.614]
11	206 [8.110]	184 [7.244]
12	222 [8.740]	200 [7.874]
13	238 [9.370]	216 [8.504]
14	254 [10.000]	232 [9.134]
15	270 [10.630]	248 [9.764]
16	286 [11.260]	264 [10.394]
17	302 [11.890]	280 [11.024]
18	318 [12.520]	296 [11.654]
19	334 [13.150]	312 [12.283]
20	350 [13.780]	328 [12.913]

F15M [Number of valves] A J/M/L [Pilot specifications] (Base piping type)

Monoblock manifold A type, wire saving type
With manifold outlet port dual use fitting block
Dimensions show flat cable connector 20-pin specifications

● **Internal pilot specifications**

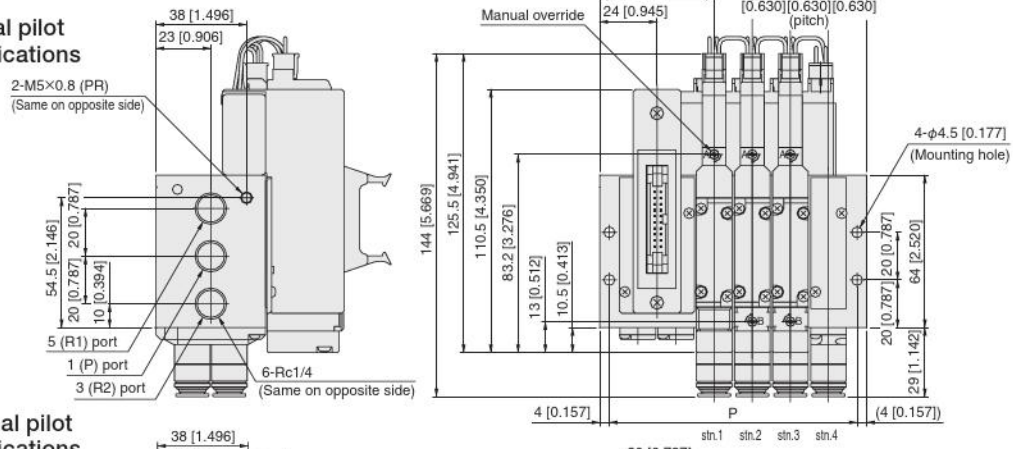

● **External pilot specifications**

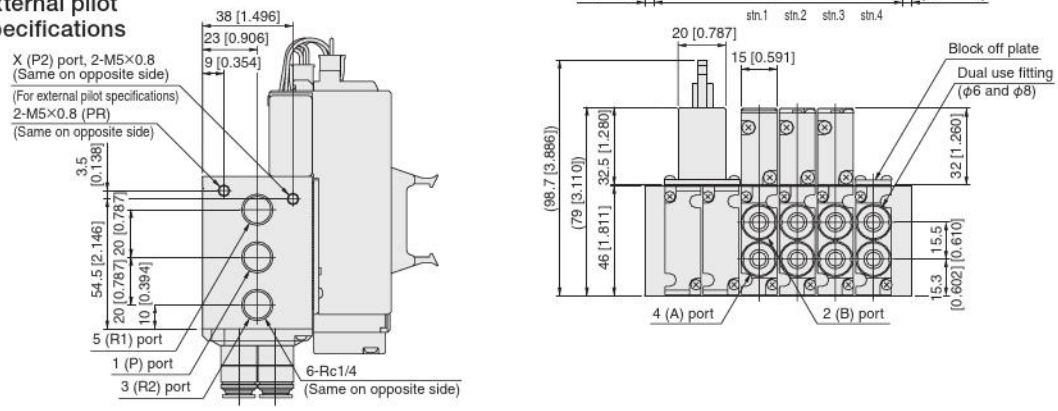

Unit dimensions

Number of units	L	P
2	80 [3.150]	72 [2.835]
3	96 [3.780]	88 [3.465]
4	112 [4.409]	104 [4.094]
5	128 [5.039]	120 [4.724]
6	144 [5.669]	136 [5.354]
7	160 [6.299]	152 [5.984]
8	176 [6.929]	168 [6.614]
9	192 [7.559]	184 [7.244]
10	208 [8.189]	200 [7.874]
11	224 [8.819]	216 [8.504]
12	240 [9.449]	232 [9.134]
13	256 [10.079]	248 [9.764]
14	272 [10.709]	264 [10.394]
15	288 [11.339]	280 [11.024]
16	304 [11.969]	296 [11.654]
17	320 [12.598]	312 [12.283]
18	336 [13.228]	328 [12.913]
19	352 [13.858]	344 [13.543]
20	368 [14.488]	360 [14.173]

F15M [Number of valves] AHL [Pilot specifications] (Base piping type)

Monoblock manifold A type, wire saving type
With manifold outlet port female thread block
Dimensions show flat cable connector 20-pin specifications

● **Internal pilot specifications**

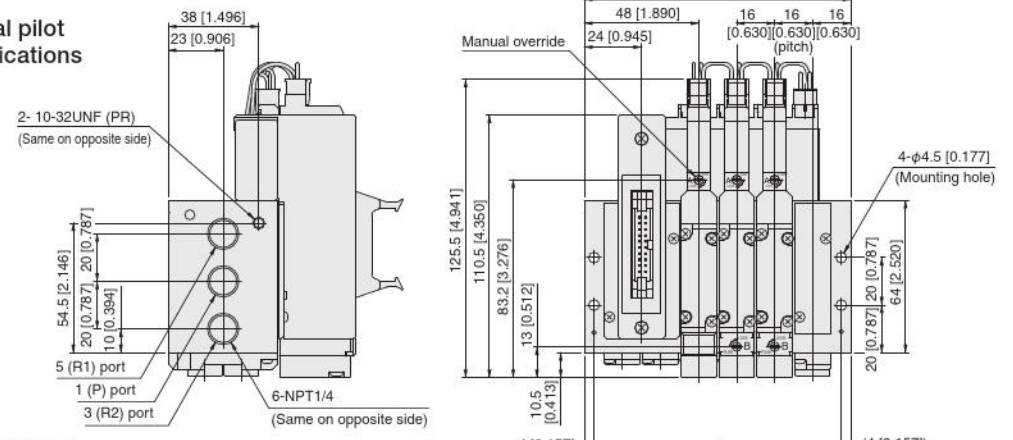

● **External pilot specifications**

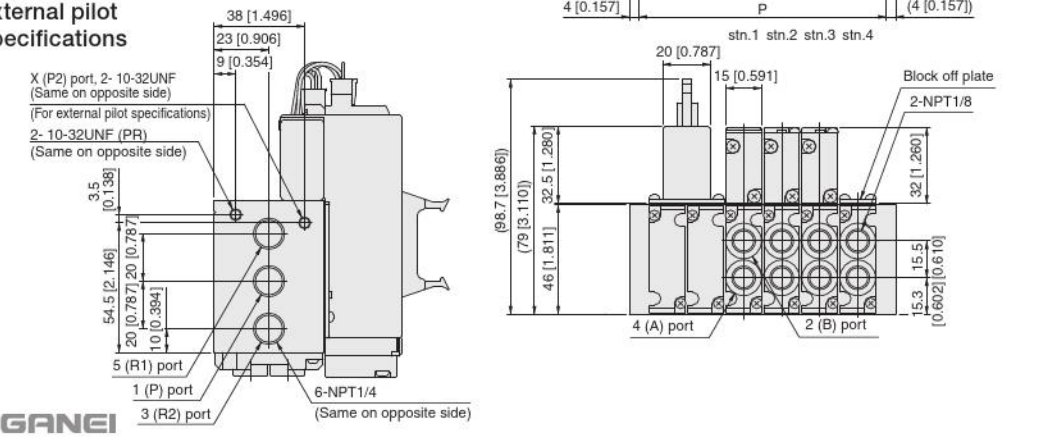

Unit dimensions

Number of units	L	P
2	80 [3.150]	72 [2.835]
3	96 [3.780]	88 [3.465]
4	112 [4.409]	104 [4.094]
5	128 [5.039]	120 [4.724]
6	144 [5.669]	136 [5.354]
7	160 [6.299]	152 [5.984]
8	176 [6.929]	168 [6.614]
9	192 [7.559]	184 [7.244]
10	208 [8.189]	200 [7.874]
11	224 [8.819]	216 [8.504]
12	240 [9.449]	232 [9.134]
13	256 [10.079]	248 [9.764]
14	272 [10.709]	264 [10.394]
15	288 [11.339]	280 [11.024]
16	304 [11.969]	296 [11.654]
17	320 [12.598]	312 [12.283]
18	336 [13.228]	328 [12.913]
19	352 [13.858]	344 [13.543]
20	368 [14.488]	360 [14.173]

F15M Number of valves F (Direct piping type)

Monoblock manifold F type, wire saving type
With valve outlet port dual use fitting block
Dimensions show flat cable connector 20-pin specifications

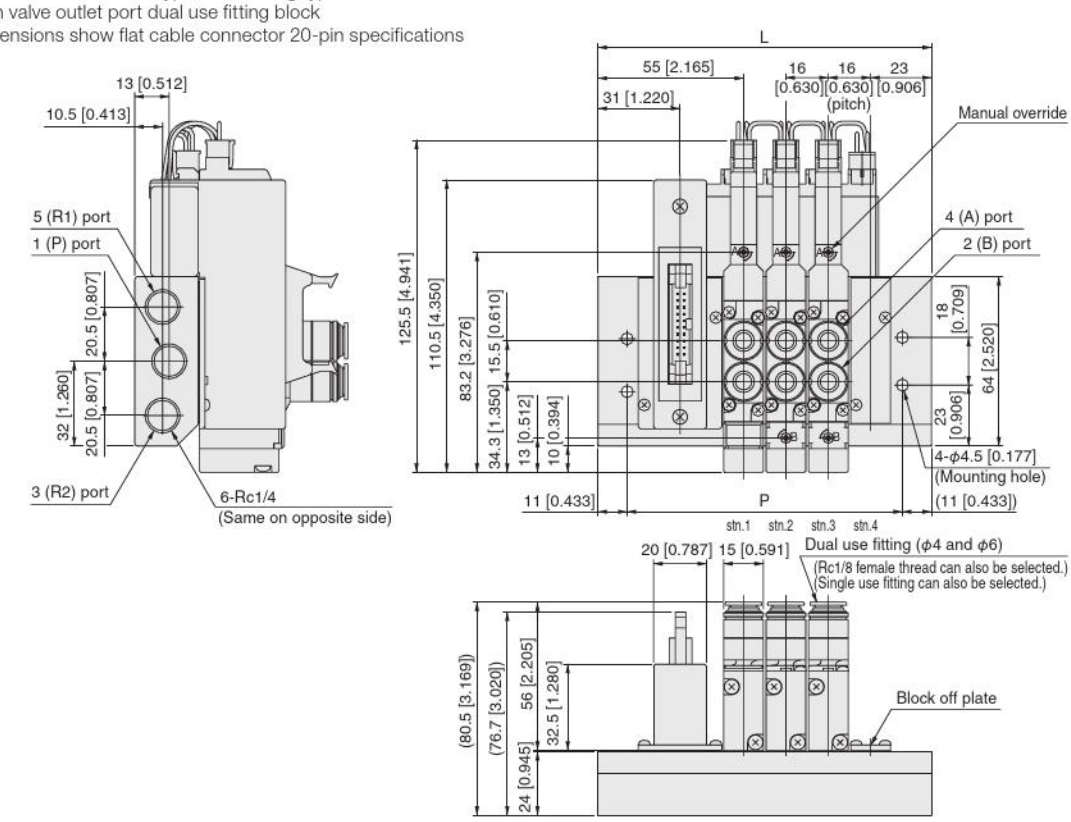

Unit dimensions

Number of units	L	P
2	94 [3.701]	72 [2.835]
3	110 [4.331]	88 [3.465]
4	126 [4.961]	104 [4.094]
5	142 [5.591]	120 [4.724]
6	158 [6.220]	136 [5.354]
7	174 [6.850]	152 [5.984]
8	190 [7.480]	168 [6.614]
9	206 [8.110]	184 [7.244]
10	222 [8.740]	200 [7.874]
11	238 [9.370]	216 [8.504]
12	254 [10.000]	232 [9.134]
13	270 [10.630]	248 [9.764]
14	286 [11.260]	264 [10.394]
15	302 [11.890]	280 [11.024]
16	318 [12.520]	296 [11.654]
17	334 [13.150]	312 [12.283]
18	350 [13.780]	328 [12.913]
19	366 [14.409]	344 [13.543]
20	382 [15.039]	360 [14.173]

F15M Number of valves FH (Direct piping type)

Monoblock manifold F type, wire saving type
With valve outlet port female thread block
Dimensions show flat cable connector 20-pin specifications

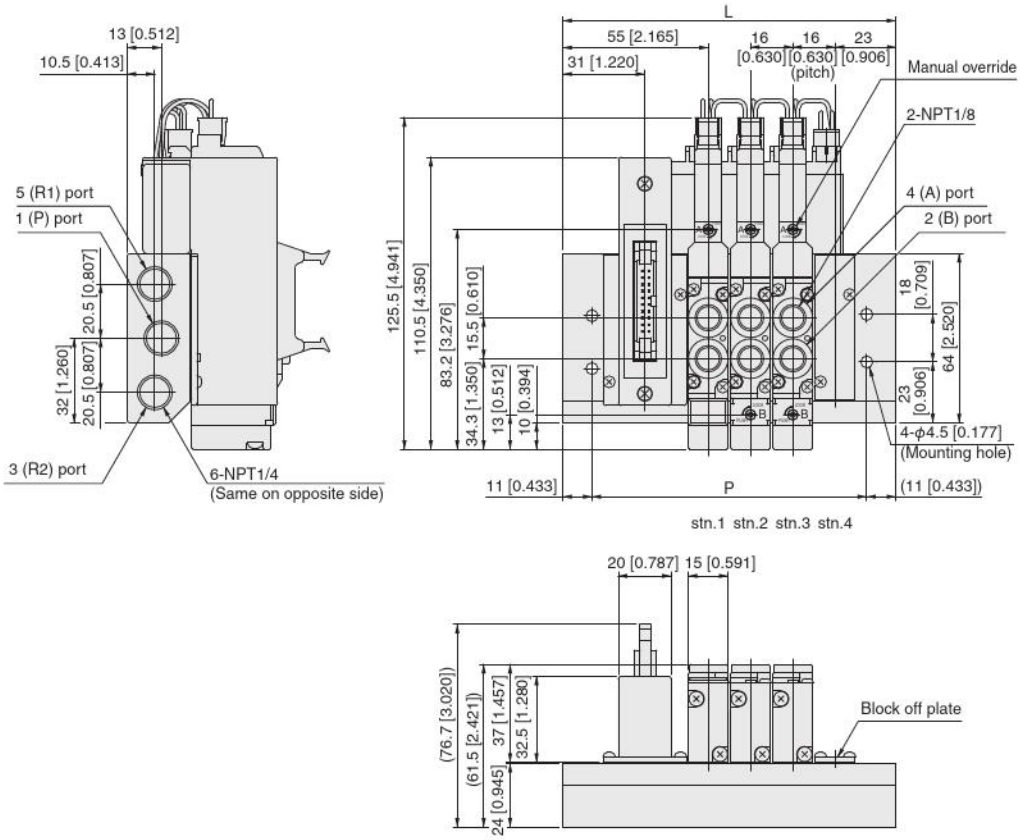

Unit dimensions

Number of units	L	P
2	94 [3.701]	72 [2.835]
3	110 [4.331]	88 [3.465]
4	126 [4.961]	104 [4.094]
5	142 [5.591]	120 [4.724]
6	158 [6.220]	136 [5.354]
7	174 [6.850]	152 [5.984]
8	190 [7.480]	168 [6.614]
9	206 [8.110]	184 [7.244]
10	222 [8.740]	200 [7.874]
11	238 [9.370]	216 [8.504]
12	254 [10.000]	232 [9.134]
13	270 [10.630]	248 [9.764]
14	286 [11.260]	264 [10.394]
15	302 [11.890]	280 [11.024]
16	318 [12.520]	296 [11.654]
17	334 [13.150]	312 [12.283]
18	350 [13.780]	328 [12.913]
19	366 [14.409]	344 [13.543]
20	382 [15.039]	360 [14.173]

F15M [Number of valves] AP J/M/L [Pilot specifications] (Base piping type)

PC board manifold A type
With manifold outlet port dual use fitting block

Note: Mounted valve example shows -W wiring specifications.
In the case of -S wiring specifications, the mounted valve becomes T0 or T1 type.

● Internal pilot specifications

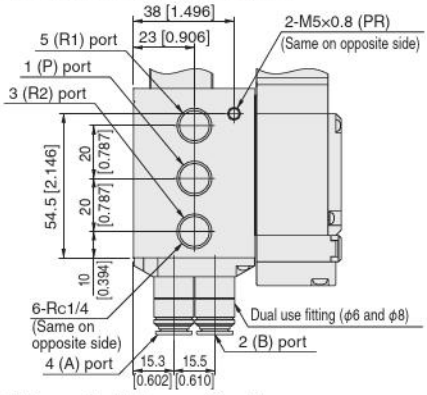

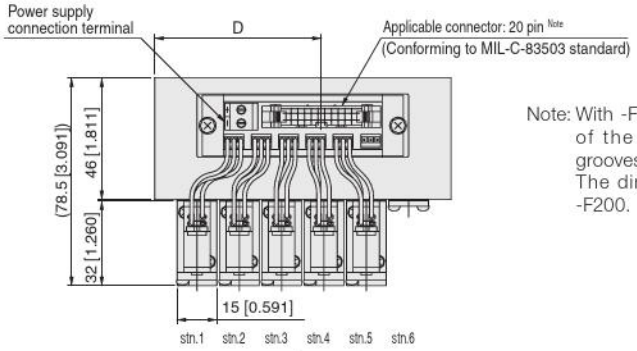

Note: With -F200 and -F201, the positions of the mis-insertion prevention grooves are reversed.
The dimentions show the case of -F200.

● External pilot specifications

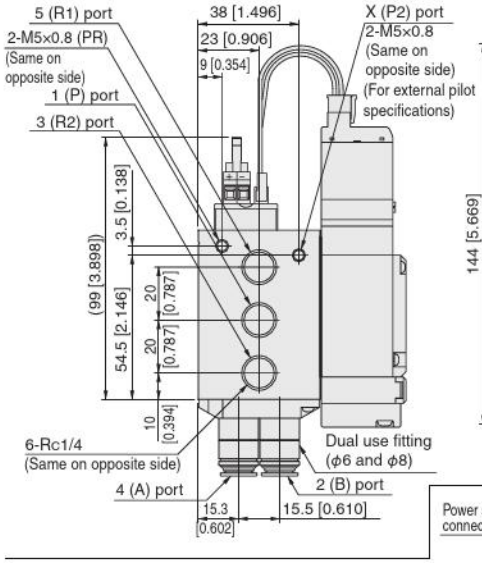

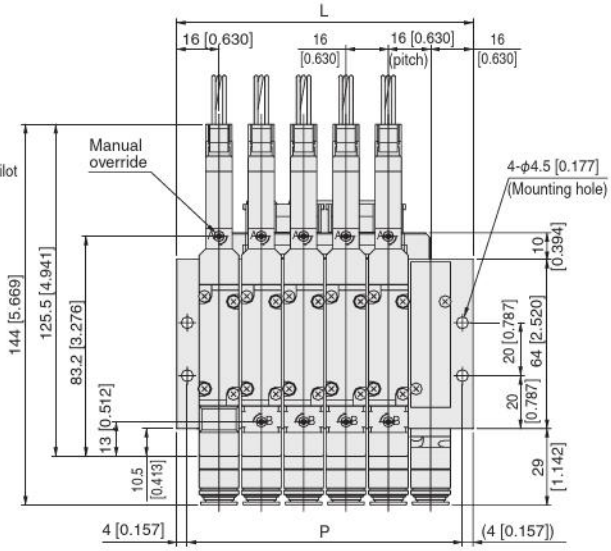

Unit dimensions

Number of units	L	P	D
6	112 [4.409]	104 [4.094]	63 [2.480]
8	144 [5.669]	136 [5.354]	68.5 [2.697]
10	176 [6.929]	168 [6.614]	68.5 [2.697]
12	208 [8.189]	200 [7.874]	79.5 [3.130]
14	240 [9.449]	232 [9.134]	90 [3.543]
16	272 [10.709]	264 [10.394]	90 [3.543]

Note: Wiring specifications
For -S: 6, 8, 10, 12, 14, 16 units
For -W: Only 6 and 8 units selectable

F15M [Number of valves] FP

(Direct piping type)

PC board manifold F type
With valve outlet port dual use fitting block

Note: Mounted valve example shows -W wiring specifications.
In the case of -S wiring specifications, the mounted valve becomes T0 or T1 type.

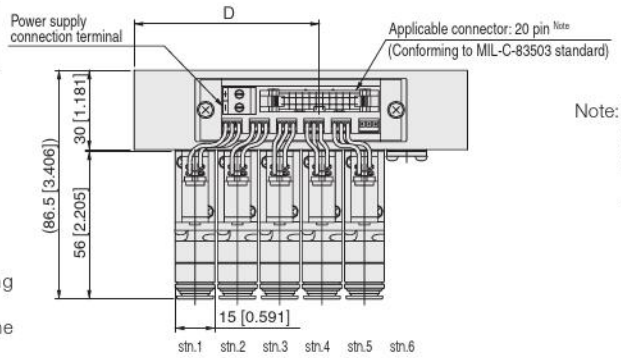

Note: With -F200 and -F201, the positions of the mis-insertion prevention grooves are reversed.
The dimentions show the case of -F200.

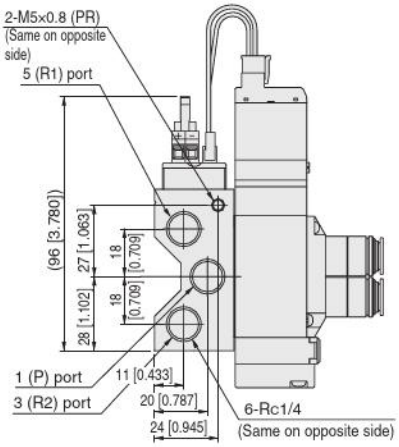

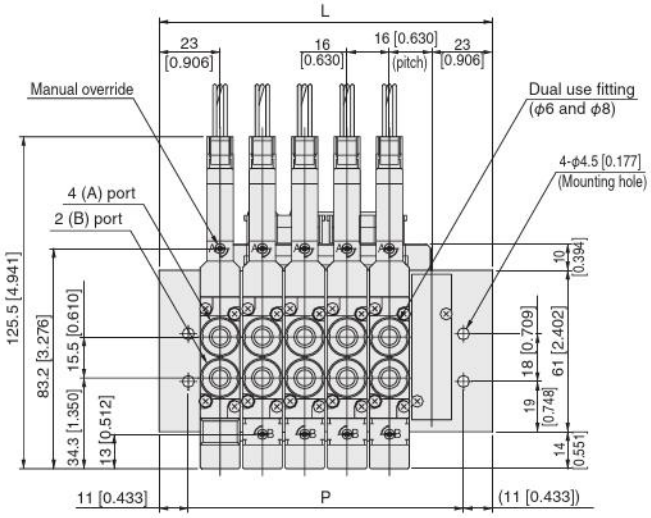

Unit dimensions

Number of units	L	P	D
6	126 [4.961]	104 [4.094]	70 [2.756]
8	158 [6.220]	136 [5.354]	75.5 [2.972]
10	190 [7.480]	168 [6.614]	75.5 [2.972]
12	222 [8.740]	200 [7.874]	86.5 [3.406]
14	254 [10.000]	232 [9.134]	92 [3.622]
16	286 [11.260]	264 [10.394]	92 [3.622]

Note: Wiring specifications
For -S: 6, 8, 10, 12, 14, 16 units
For -W: Only 6 and 8 units selectable

Note: The overall valve length of the T0 type is 10 mm [0.394 in] shorter (end cover side protrusion is 10 mm [0.394 in] less).

F15M [Number of valves] N J/M/L [Pilot specifications] (Base piping type)

With manifold outlet port dual use fitting block
S type plug connector

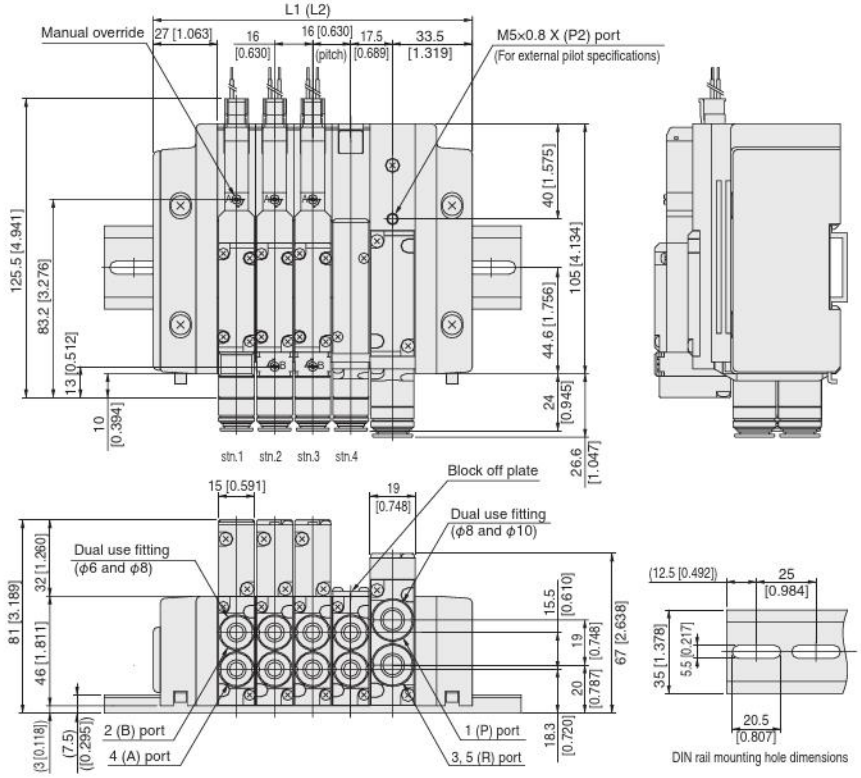

Unit dimensions

Number of units	L1	Length of DIN rail	L2 Note	Length of DIN rail Note
2	102 [4.016]	150 [5.906]	121 [4.764]	150 [5.906]
3	118 [4.646]	150 [5.906]	137 [5.394]	175 [6.890]
4	134 [5.276]	175 [6.890]	153 [6.024]	200 [7.874]
5	150 [5.906]	175 [6.890]	169 [6.654]	200 [7.874]
6	166 [6.535]	200 [7.874]	185 [7.283]	225 [8.858]
7	182 [7.165]	225 [8.858]	201 [7.913]	250 [9.843]
8	198 [7.795]	225 [8.858]	217 [8.543]	250 [9.843]
9	214 [8.425]	250 [9.843]	233 [9.173]	275 [10.827]
10	230 [9.055]	275 [10.827]	249 [9.803]	275 [10.827]
11	246 [9.685]	275 [10.827]	265 [10.433]	300 [11.811]
12	262 [10.315]	300 [11.811]	281 [11.063]	325 [12.795]
13	278 [10.945]	325 [12.795]	297 [11.693]	325 [12.795]
14	294 [11.575]	325 [12.795]	313 [12.323]	350 [13.780]
15	310 [12.205]	350 [13.780]	329 [12.953]	375 [14.764]
16	326 [12.835]	375 [14.764]	345 [13.583]	375 [14.764]
17	342 [13.465]	375 [14.764]	361 [14.213]	400 [15.748]
18	358 [14.094]	400 [15.748]	377 [14.843]	425 [16.732]
19	374 [14.724]	400 [15.748]	393 [15.472]	425 [16.732]
20	390 [15.354]	425 [16.732]	409 [16.102]	450 [17.717]

Note: When two piping blocks are used.

F15M [Number of valves] N [Pilot specifications] (Direct piping type)

With valve outlet port dual use fitting block
S type plug connector

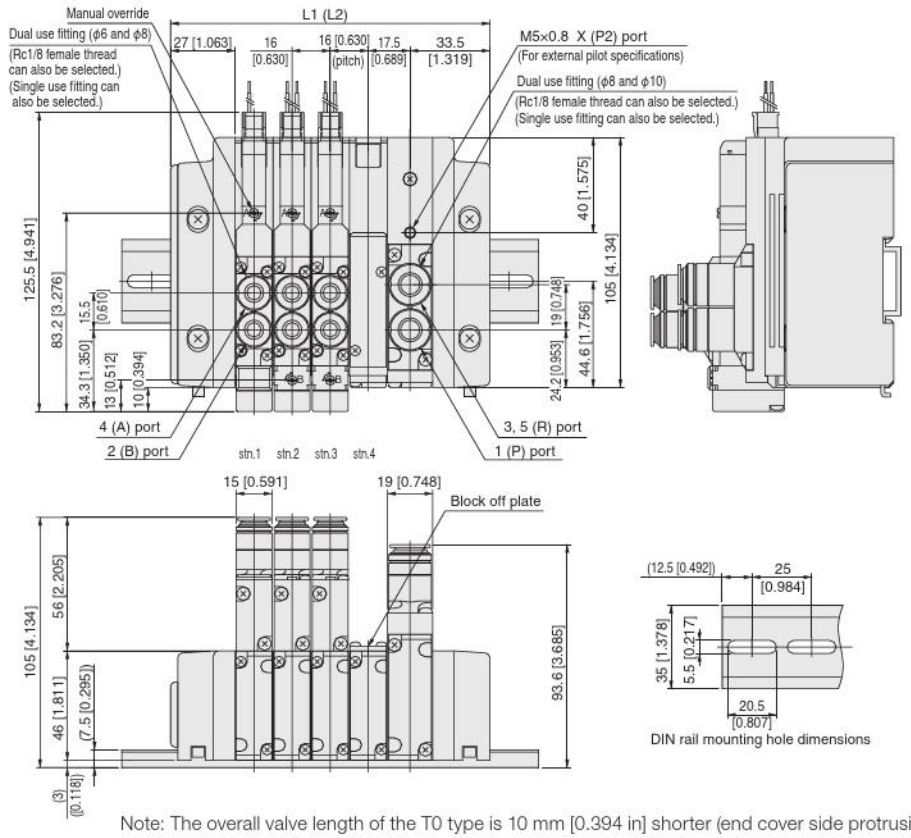

Unit dimensions

Number of units	L1	Length of DIN rail	L2 Note	Length of DIN rail Note
2	102 [4.016]	150 [5.906]	121 [4.764]	150 [5.906]
3	118 [4.646]	150 [5.906]	137 [5.394]	175 [6.890]
4	134 [5.276]	175 [6.890]	153 [6.024]	200 [7.874]
5	150 [5.906]	175 [6.890]	169 [6.654]	200 [7.874]
6	166 [6.535]	200 [7.874]	185 [7.283]	225 [8.858]
7	182 [7.165]	225 [8.858]	201 [7.913]	250 [9.843]
8	198 [7.795]	225 [8.858]	217 [8.543]	250 [9.843]
9	214 [8.425]	250 [9.843]	233 [9.173]	275 [10.827]
10	230 [9.055]	275 [10.827]	249 [9.803]	275 [10.827]
11	246 [9.685]	275 [10.827]	265 [10.433]	300 [11.811]
12	262 [10.315]	300 [11.811]	281 [11.063]	325 [12.795]
13	278 [10.945]	325 [12.795]	297 [11.693]	325 [12.795]
14	294 [11.575]	325 [12.795]	313 [12.323]	350 [13.780]
15	310 [12.205]	350 [13.780]	329 [12.953]	375 [14.764]
16	326 [12.835]	375 [14.764]	345 [13.583]	375 [14.764]
17	342 [13.465]	375 [14.764]	361 [14.213]	400 [15.748]
18	358 [14.094]	400 [15.748]	377 [14.843]	425 [16.732]
19	374 [14.724]	400 [15.748]	393 [15.472]	425 [16.732]
20	390 [15.354]	425 [16.732]	409 [16.102]	450 [17.717]

Note: When two piping blocks are used.

Note: The overall valve length of the T0 type is 10 mm [0.394 in] shorter (end cover side protrusion is 10 mm [0.394 in] less).

F15M Number of valves NHL Pilot specifications (Base piping type)

With manifold outlet port female thread block
S type plug connector

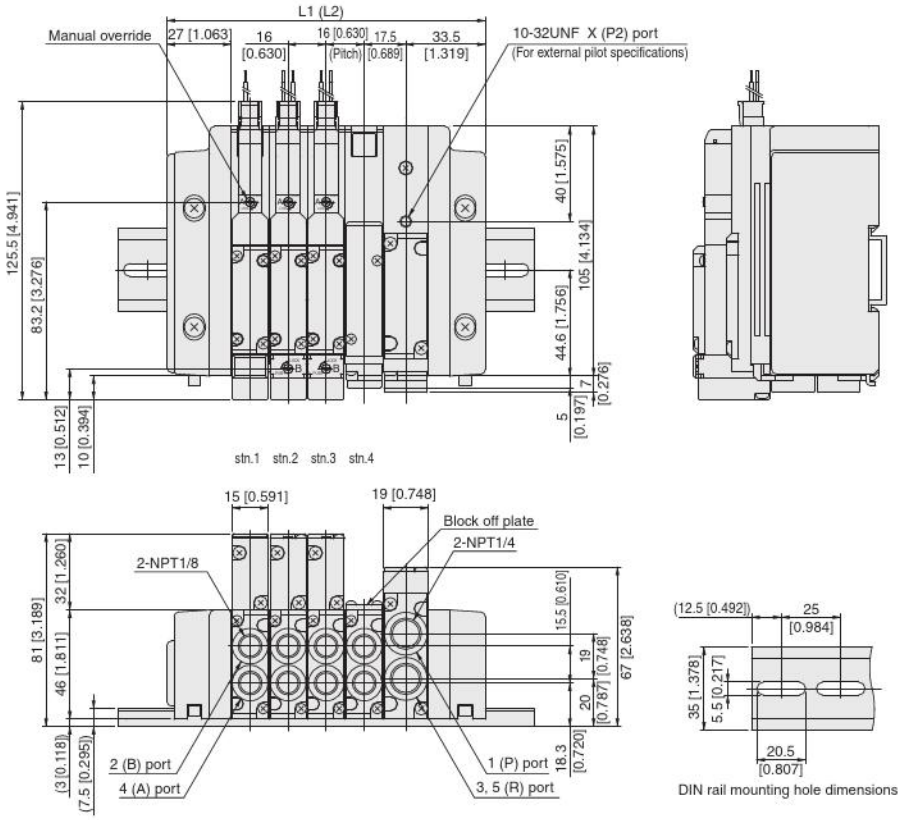

Unit dimensions

Number of units	L1	Length of DIN rail	L2 Note	Length of DIN rail Note
2	102 [4.016]	150 [5.906]	121 [4.764]	150 [5.906]
3	118 [4.646]	150 [5.906]	137 [5.394]	175 [6.890]
4	134 [5.276]	175 [6.890]	153 [6.024]	200 [7.874]
5	150 [5.906]	175 [6.890]	169 [6.654]	200 [7.874]
6	166 [6.535]	200 [7.874]	185 [7.283]	225 [8.858]
7	182 [7.165]	225 [8.858]	201 [7.913]	250 [9.843]
8	198 [7.795]	225 [8.858]	217 [8.543]	250 [9.843]
9	214 [8.425]	250 [9.843]	233 [9.173]	275 [10.827]
10	230 [9.055]	275 [10.827]	249 [9.803]	275 [10.827]
11	246 [9.685]	275 [10.827]	265 [10.433]	300 [11.811]
12	262 [10.315]	300 [11.811]	281 [11.063]	325 [12.795]
13	278 [10.945]	325 [12.795]	297 [11.693]	325 [12.795]
14	294 [11.575]	325 [12.795]	313 [12.323]	350 [13.780]
15	310 [12.205]	350 [13.780]	329 [12.953]	375 [14.764]
16	326 [12.835]	375 [14.764]	345 [13.583]	375 [14.764]
17	342 [13.465]	375 [14.764]	361 [14.213]	400 [15.748]
18	358 [14.094]	400 [15.748]	377 [14.843]	425 [16.732]
19	374 [14.724]	400 [15.748]	393 [15.472]	425 [16.732]
20	390 [15.354]	425 [16.732]	409 [16.102]	450 [17.717]

Note: When two piping blocks are used.

F15M Number of valves NH Pilot specifications (Direct piping type)

With valve outlet port female thread block
S type plug connector

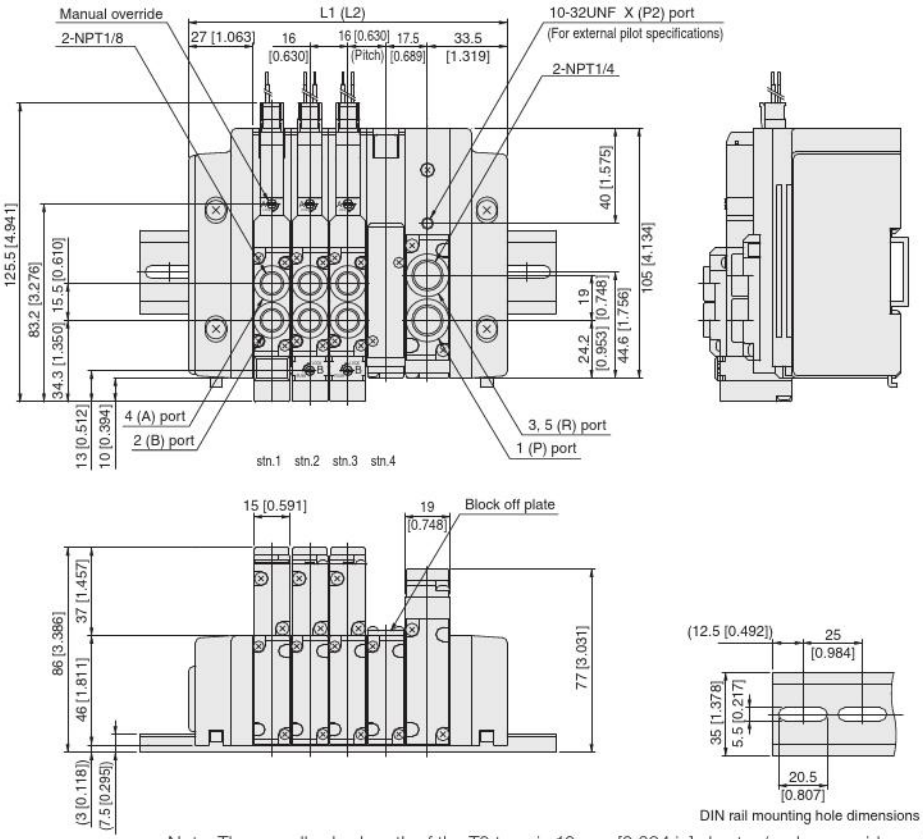

Unit dimensions

Number of units	L1	Length of DIN rail	L2 Note	Length of DIN rail Note
2	102 [4.016]	150 [5.906]	121 [4.764]	150 [5.906]
3	118 [4.646]	150 [5.906]	137 [5.394]	175 [6.890]
4	134 [5.276]	175 [6.890]	153 [6.024]	200 [7.874]
5	150 [5.906]	175 [6.890]	169 [6.654]	200 [7.874]
6	166 [6.535]	200 [7.874]	185 [7.283]	225 [8.858]
7	182 [7.165]	225 [8.858]	201 [7.913]	250 [9.843]
8	198 [7.795]	225 [8.858]	217 [8.543]	250 [9.843]
9	214 [8.425]	250 [9.843]	233 [9.173]	275 [10.827]
10	230 [9.055]	275 [10.827]	249 [9.803]	275 [10.827]
11	246 [9.685]	275 [10.827]	265 [10.433]	300 [11.811]
12	262 [10.315]	300 [11.811]	281 [11.063]	325 [12.795]
13	278 [10.945]	325 [12.795]	297 [11.693]	325 [12.795]
14	294 [11.575]	325 [12.795]	313 [12.323]	350 [13.780]
15	310 [12.205]	350 [13.780]	329 [12.953]	375 [14.764]
16	326 [12.835]	375 [14.764]	345 [13.583]	375 [14.764]
17	342 [13.465]	375 [14.764]	361 [14.213]	400 [15.748]
18	358 [14.094]	400 [15.748]	377 [14.843]	425 [16.732]
19	374 [14.724]	400 [15.748]	393 [15.472]	425 [16.732]
20	390 [15.354]	425 [16.732]	409 [16.102]	450 [17.717]

Note: When two piping blocks are used.

Note: The overall valve length of the T0 type is 10 mm [0.394 in] shorter (end cover side protrusion is 10 mm [0.394 in] less).

F15M [Number of valves] P J/M/L [Pilot specifications] (Base piping type)

With manifold outlet port dual use fitting block
Flat cable connector 10-pin specifications

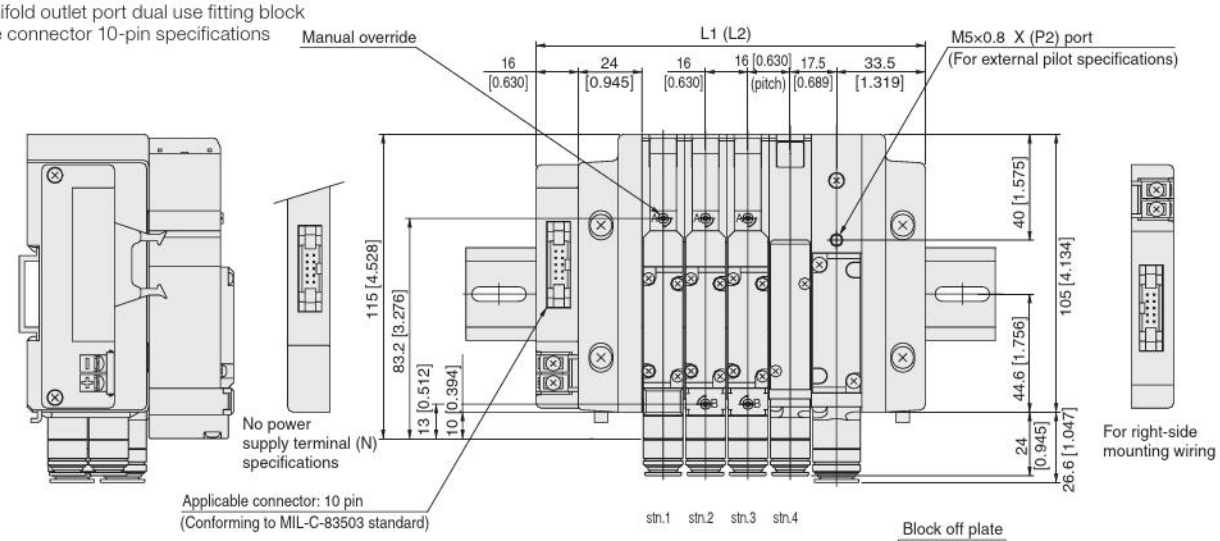

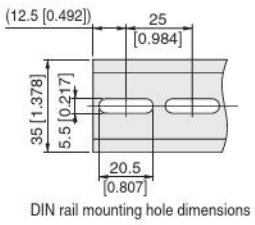

DIN rail mounting hole dimensions

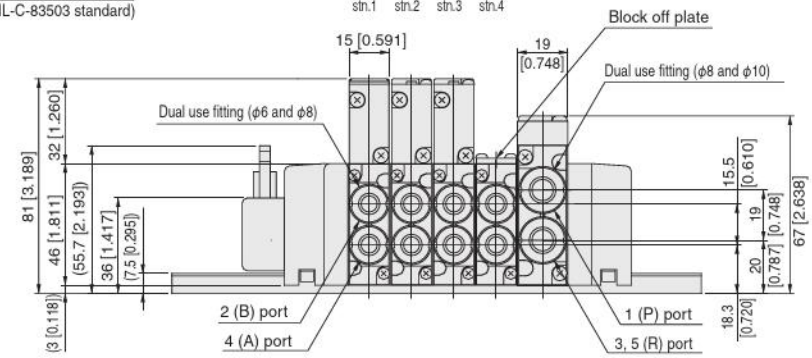

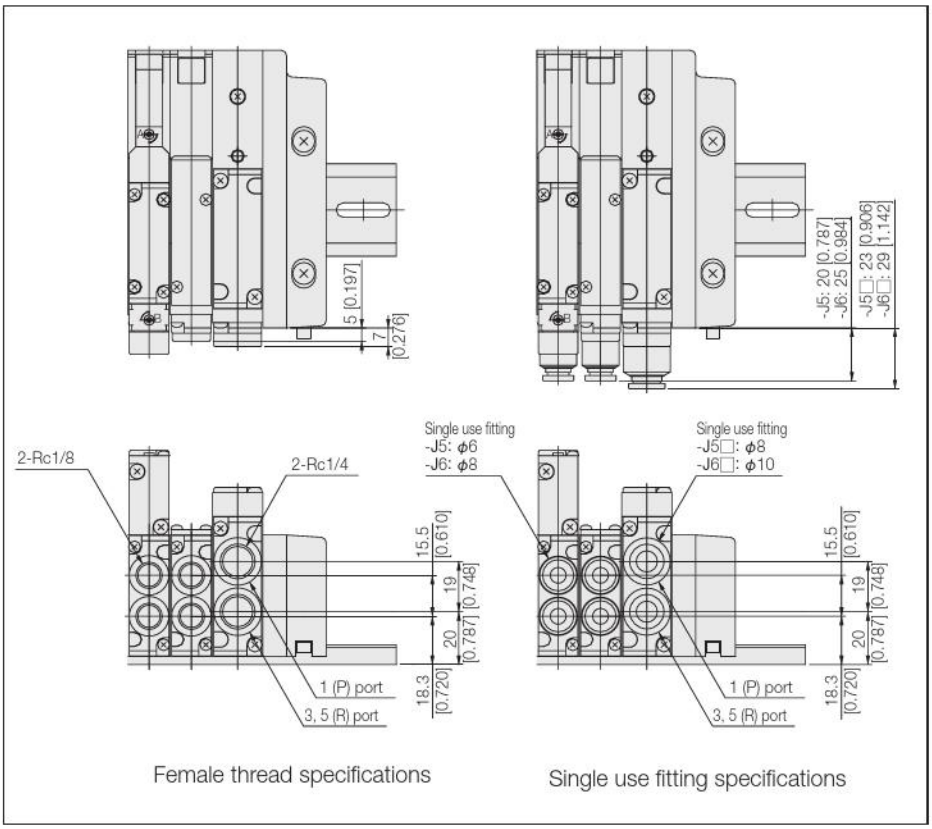

Unit dimensions

Number of units	L1	Length of DIN rail	L2 Note	Length of DIN rail Note
2	115 [4.528]	150 [5.906]	134 [5.276]	175 [6.890]
3	131 [5.157]	175 [6.890]	150 [5.906]	200 [7.874]
4	147 [5.787]	200 [7.874]	166 [6.535]	200 [7.874]
5	163 [6.417]	200 [7.874]	182 [7.165]	225 [8.858]
6	179 [7.047]	225 [8.858]	198 [7.795]	250 [9.843]
7	195 [7.677]	250 [9.843]	214 [8.425]	250 [9.843]
8	211 [8.307]	250 [9.843]	230 [9.055]	275 [10.827]

Note: When two piping blocks are used.
* For right-side mounting wiring (-R), add 3 mm [0.118 in] to the L1 (L2) dimension.

F15M [Number of valves] P J/M/L [Pilot specifications] (Base piping type)

With manifold outlet port dual use fitting block
Flat cable connector 20-pin specifications (side surface wiring)

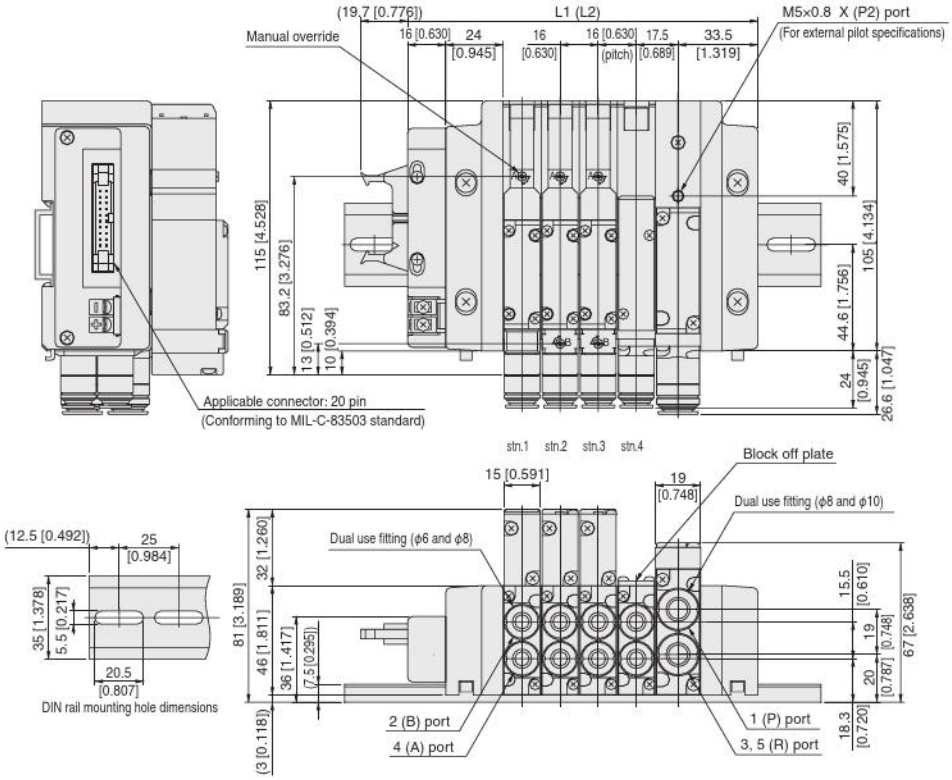

Unit dimensions

Number of units	L1	Length of DIN rail	L2 Note	Length of DIN rail Note
2	115 [4.528]	150 [5.906]	134 [5.276]	175 [6.890]
3	131 [5.157]	175 [6.890]	150 [5.906]	200 [7.874]
4	147 [5.787]	200 [7.874]	166 [6.535]	200 [7.874]
5	163 [6.417]	200 [7.874]	182 [7.165]	225 [8.858]
6	179 [7.047]	225 [8.858]	198 [7.795]	250 [9.843]
7	195 [7.677]	250 [9.843]	214 [8.425]	250 [9.843]
8	211 [8.307]	250 [9.843]	230 [9.055]	275 [10.827]
9	227 [8.937]	275 [10.827]	246 [9.685]	300 [11.811]
10	243 [9.567]	300 [11.811]	262 [10.315]	300 [11.811]
11	259 [10.197]	300 [11.811]	278 [10.945]	325 [12.795]
12	275 [10.827]	325 [12.795]	294 [11.575]	350 [13.780]
13	291 [11.457]	325 [12.795]	310 [12.205]	350 [13.780]
14	307 [12.087]	350 [13.780]	326 [12.835]	375 [14.764]
15	323 [12.717]	375 [14.764]	342 [13.465]	375 [14.764]
16	339 [13.346]	375 [14.764]	358 [14.094]	400 [15.748]

Note: When two piping blocks are used.

* For right-side mounting wiring (-R), add 3 mm [0.118 in] to the L1 (L2) dimension.

F15M [Number of valves] P J/M/L [Pilot specifications] (Base piping type)

With manifold outlet port dual use fitting block
Flat cable connector 26-pin specifications

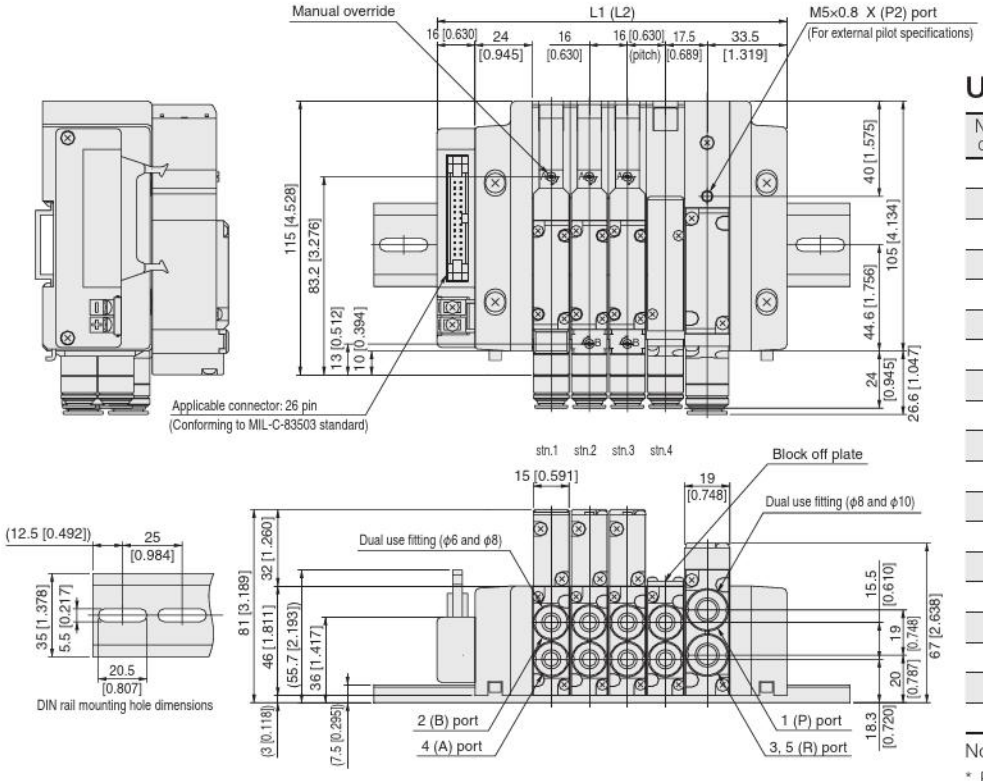

Unit dimensions

Number of units	L1	Length of DIN rail	L2 Note	Length of DIN rail Note
2	115 [4.528]	150 [5.906]	134 [5.276]	175 [6.890]
3	131 [5.157]	175 [6.890]	150 [5.906]	200 [7.874]
4	147 [5.787]	200 [7.874]	166 [6.535]	200 [7.874]
5	163 [6.417]	200 [7.874]	182 [7.165]	225 [8.858]
6	179 [7.047]	225 [8.858]	198 [7.795]	250 [9.843]
7	195 [7.677]	250 [9.843]	214 [8.425]	250 [9.843]
8	211 [8.307]	250 [9.843]	230 [9.055]	275 [10.827]
9	227 [8.937]	275 [10.827]	246 [9.685]	300 [11.811]
10	243 [9.567]	300 [11.811]	262 [10.315]	300 [11.811]
11	259 [10.197]	300 [11.811]	278 [10.945]	325 [12.795]
12	275 [10.827]	325 [12.795]	294 [11.575]	350 [13.780]
13	291 [11.457]	325 [12.795]	310 [12.205]	350 [13.780]
14	307 [12.087]	350 [13.780]	326 [12.835]	375 [14.764]
15	323 [12.717]	375 [14.764]	342 [13.465]	375 [14.764]
16	339 [13.346]	375 [14.764]	358 [14.094]	400 [15.748]
17	355 [13.976]	400 [15.748]	374 [14.724]	425 [16.732]
18	371 [14.606]	425 [16.732]	390 [15.354]	425 [16.732]
19	387 [15.236]	425 [16.732]	406 [15.984]	450 [17.717]
20	403 [15.866]	450 [17.717]	422 [16.614]	475 [18.701]

Note: When two piping blocks are used.

* For right-side mounting wiring (-R), add 3 mm [0.118 in] to the L1 (L2) dimension.

F15M [Number of valves] P [J/M/L] [Pilot specifications] (Base piping type)

With manifold outlet port dual use fitting block
D-sub connector 25-pin specifications

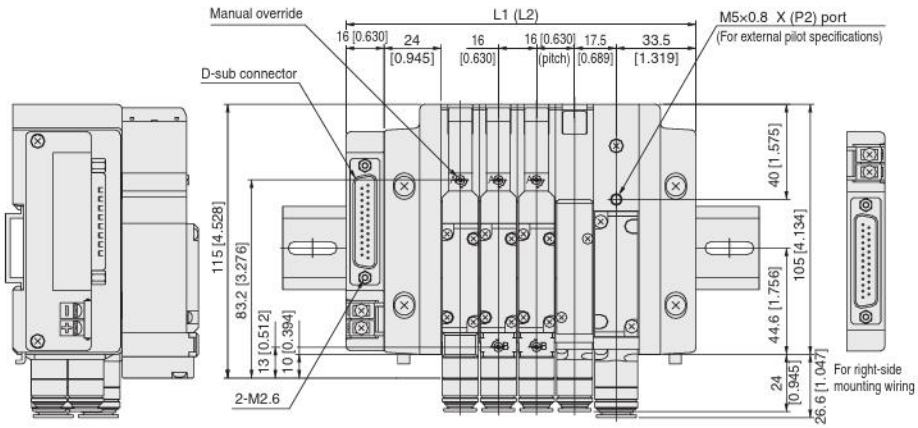

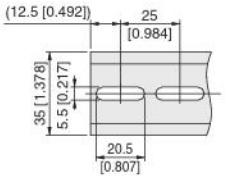

DIN rail mounting hole dimensions

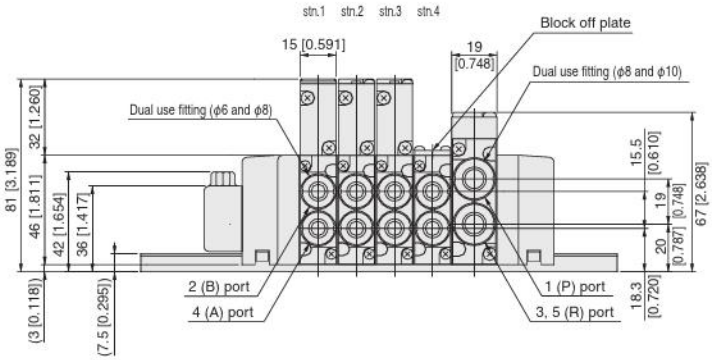

Unit dimensions

Number of units	L1	Length of DIN rail	L2 Note	Length of DIN rail Note
2	115 [4.528]	150 [5.906]	134 [5.276]	175 [6.890]
3	131 [5.157]	175 [6.890]	150 [5.906]	200 [7.874]
4	147 [5.787]	200 [7.874]	166 [6.535]	200 [7.874]
5	163 [6.417]	200 [7.874]	182 [7.165]	225 [8.858]
6	179 [7.047]	225 [8.858]	198 [7.795]	250 [9.843]
7	195 [7.677]	250 [9.843]	214 [8.425]	250 [9.843]
8	211 [8.307]	250 [9.843]	230 [9.055]	275 [10.827]
9	227 [8.937]	275 [10.827]	246 [9.685]	300 [11.811]
10	243 [9.567]	300 [11.811]	262 [10.315]	300 [11.811]
11	259 [10.197]	300 [11.811]	278 [10.945]	325 [12.795]
12	275 [10.827]	325 [12.795]	294 [11.575]	350 [13.780]
13	291 [11.457]	325 [12.795]	310 [12.205]	350 [13.780]
14	307 [12.087]	350 [13.780]	326 [12.835]	375 [14.764]
15	323 [12.717]	375 [14.764]	342 [13.465]	375 [14.764]
16	339 [13.346]	375 [14.764]	358 [14.094]	400 [15.748]
17	355 [13.976]	400 [15.748]	374 [14.724]	425 [16.732]
18	371 [14.606]	425 [16.732]	390 [15.354]	425 [16.732]
19	387 [15.236]	425 [16.732]	406 [15.984]	450 [17.717]
20	403 [15.866]	450 [17.717]	422 [16.614]	475 [18.701]

Note: When two piping blocks are used.

* For right-side mounting wiring (-R), add 3 mm [0.118 in] to the L1 (L2) dimension.

F15M [Number of valves] P [J/M/L] [Pilot specifications] (Base piping type)

With manifold outlet port dual use fitting block
Terminal block type

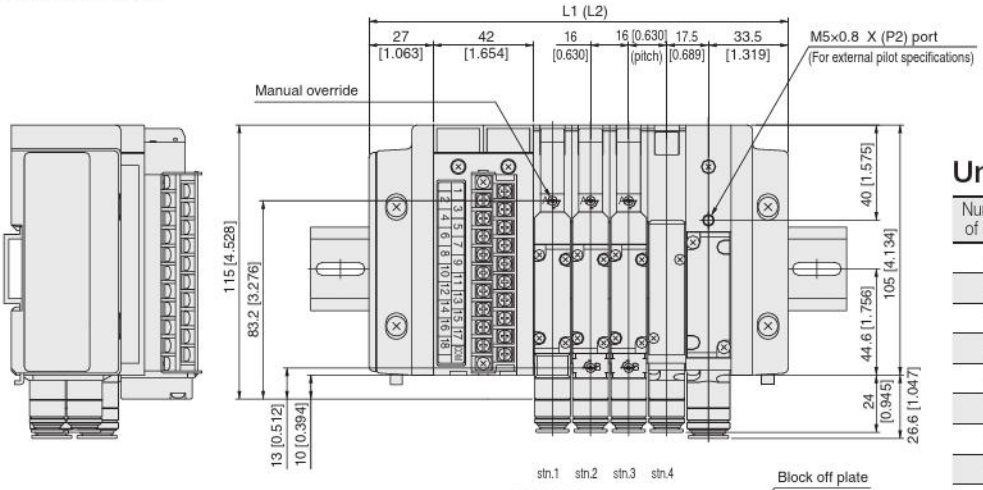

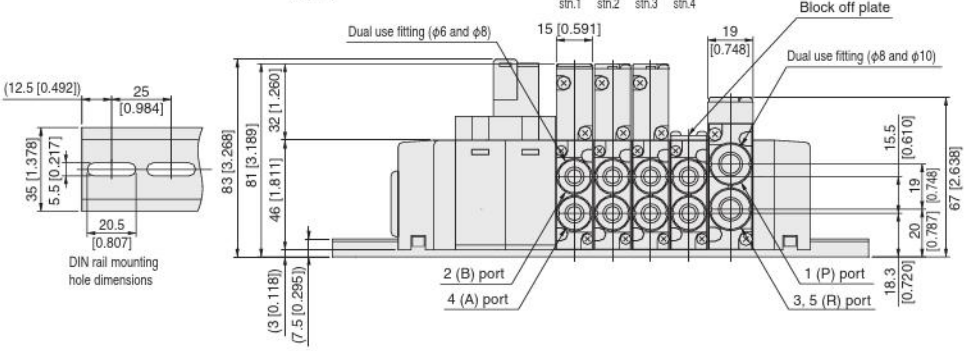

Unit dimensions

Number of units	L1	Length of DIN rail	L2 Note	Length of DIN rail Note
2	144 [5.669]	175 [6.890]	163 [6.417]	200 [7.874]
3	160 [6.299]	200 [7.874]	179 [7.047]	225 [8.858]
4	176 [6.929]	225 [8.858]	195 [7.677]	225 [8.858]
5	192 [7.559]	225 [8.858]	211 [8.307]	250 [9.843]
6	208 [8.189]	250 [9.843]	227 [8.937]	275 [10.827]
7	224 [8.819]	250 [9.843]	243 [9.567]	275 [10.827]
8	240 [9.449]	275 [10.827]	259 [10.197]	300 [11.811]
9	256 [10.079]	300 [11.811]	275 [10.827]	300 [11.811]
10	272 [10.709]	300 [11.811]	291 [11.457]	325 [12.795]
11	288 [11.339]	325 [12.795]	307 [12.087]	350 [13.780]
12	304 [11.969]	350 [13.780]	323 [12.717]	350 [13.780]
13	320 [12.598]	350 [13.780]	339 [13.346]	375 [14.764]
14	336 [13.228]	375 [14.764]	355 [13.976]	400 [15.748]
15	352 [13.858]	400 [15.748]	371 [14.606]	400 [15.748]
16	368 [14.488]	400 [15.748]	387 [15.236]	425 [16.732]
17	384 [15.118]	425 [16.732]	403 [15.866]	450 [17.717]
18	400 [15.748]	425 [16.732]	419 [16.496]	450 [17.717]

Note: When two piping blocks are used.

F15M Number of valves PHL Pilot specifications (Base piping type)

With manifold outlet port female thread block
Flat cable connector 10-pin specifications

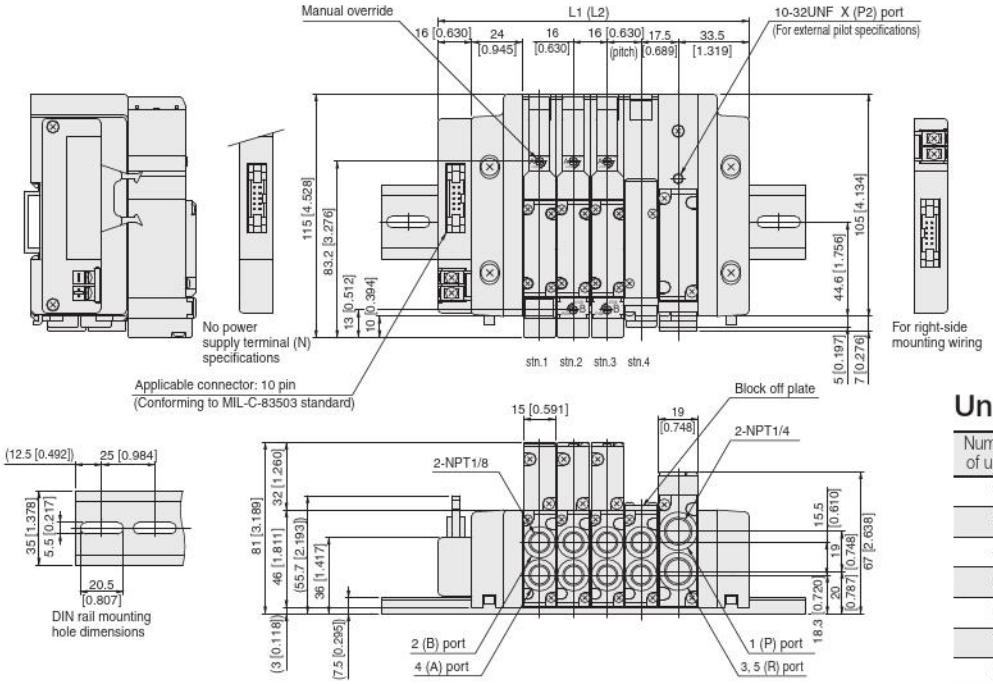

Unit dimensions

Number of units	L1	Length of DIN rail	L2 Note	Length of DIN rail Note
2	115 [4.528]	150 [5.906]	134 [5.276]	175 [6.890]
3	131 [5.157]	175 [6.890]	150 [5.906]	200 [7.874]
4	147 [5.787]	200 [7.874]	166 [6.535]	200 [7.874]
5	163 [6.417]	200 [7.874]	182 [7.165]	225 [8.858]
6	179 [7.047]	225 [8.858]	198 [7.795]	250 [9.843]
7	195 [7.677]	250 [9.843]	214 [8.425]	250 [9.843]
8	211 [8.307]	250 [9.843]	230 [9.055]	275 [10.827]

Note: When two piping blocks are used.
* For right-side mounting wiring (-R), add 3 mm [0.118 in] to the L1 (L2) dimension.

F15M Number of valves PH Pilot specifications (Direct piping type)

With valve outlet port female thread block
Flat cable connector 10-pin specifications

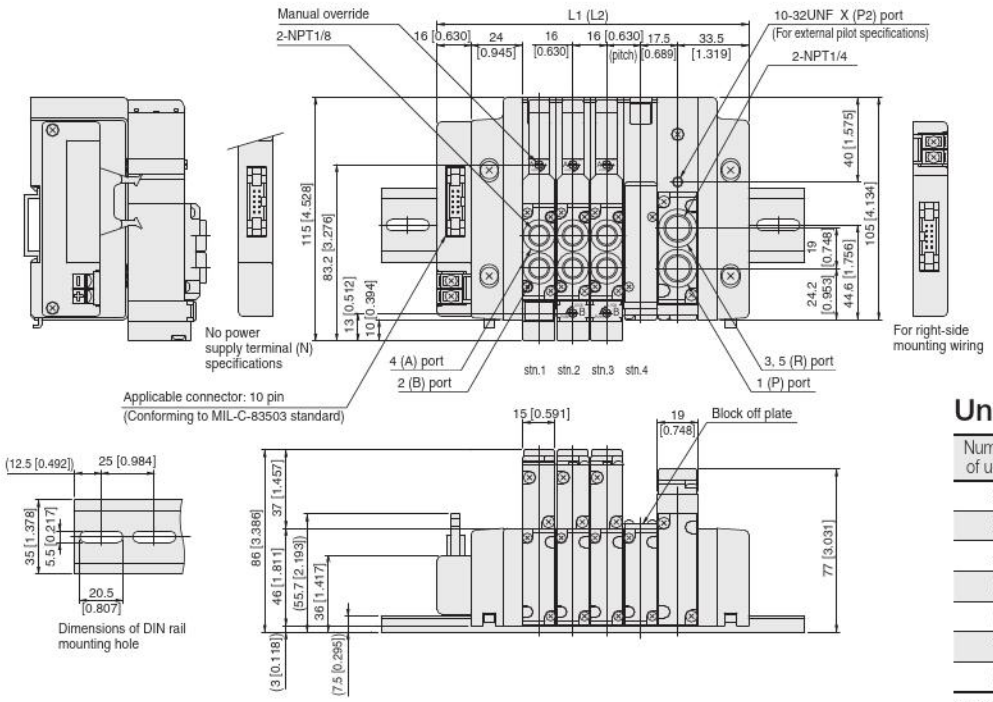

Unit dimensions

Number of units	L1	Length of DIN rail	L2 Note	Length of DIN rail Note
2	115 [4.528]	150 [5.906]	134 [5.276]	175 [6.890]
3	131 [5.157]	175 [6.890]	150 [5.906]	200 [7.874]
4	147 [5.787]	200 [7.874]	166 [6.535]	200 [7.874]
5	163 [6.417]	200 [7.874]	182 [7.165]	225 [8.858]
6	179 [7.047]	225 [8.858]	198 [7.795]	250 [9.843]
7	195 [7.677]	250 [9.843]	214 [8.425]	250 [9.843]
8	211 [8.307]	250 [9.843]	230 [9.055]	275 [10.827]

Note: When two piping blocks are used.
* For right-side mounting wiring (-R), add 3 mm [0.118 in] to the L1 (L2) dimension.

F15M Number of valves PHL Pilot specifications (Base piping type)

With manifold outlet port female thread block
Flat cable connector 20-pin specifications (top surface wiring)

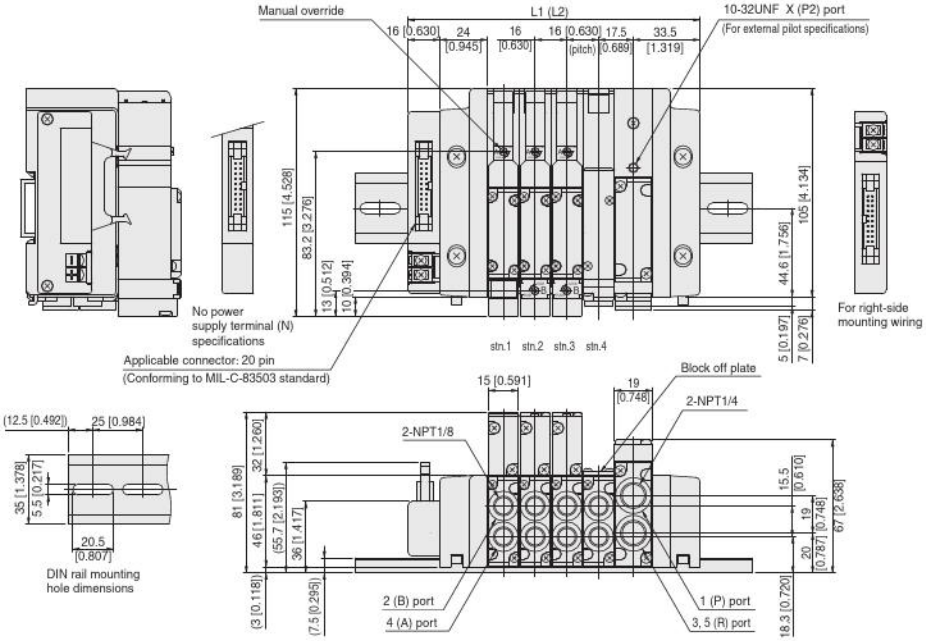

Unit dimensions

Number of units	L1	Length of DIN rail	L2 Note	Length of DIN rail Note
2	115 [4.528]	150 [5.906]	134 [5.276]	175 [6.890]
3	131 [5.157]	175 [6.890]	150 [5.906]	200 [7.874]
4	147 [5.787]	200 [7.874]	166 [6.535]	200 [7.874]
5	163 [6.417]	200 [7.874]	182 [7.165]	225 [8.858]
6	179 [7.047]	225 [8.858]	198 [7.795]	250 [9.843]
7	195 [7.677]	250 [9.843]	214 [8.425]	250 [9.843]
8	211 [8.307]	250 [9.843]	230 [9.055]	275 [10.827]
9	227 [8.937]	275 [10.827]	246 [9.685]	300 [11.811]
10	243 [9.567]	300 [11.811]	262 [10.315]	300 [11.811]
11	259 [10.197]	300 [11.811]	278 [10.945]	325 [12.795]
12	275 [10.827]	325 [12.795]	294 [11.575]	350 [13.780]
13	291 [11.457]	325 [12.795]	310 [12.205]	350 [13.780]
14	307 [12.087]	350 [13.780]	326 [12.835]	375 [14.764]
15	323 [12.717]	375 [14.764]	342 [13.465]	375 [14.764]
16	339 [13.346]	375 [14.764]	358 [14.094]	400 [15.748]

Note: When two piping blocks are used.

* For right-side mounting wiring (-R), add 3 mm [0.118 in] to the L1 (L2) dimension.

F15M Number of valves PH Pilot specifications (Direct piping type)

With valve outlet port female thread block
Flat cable connector 20-pin specifications (top surface wiring)

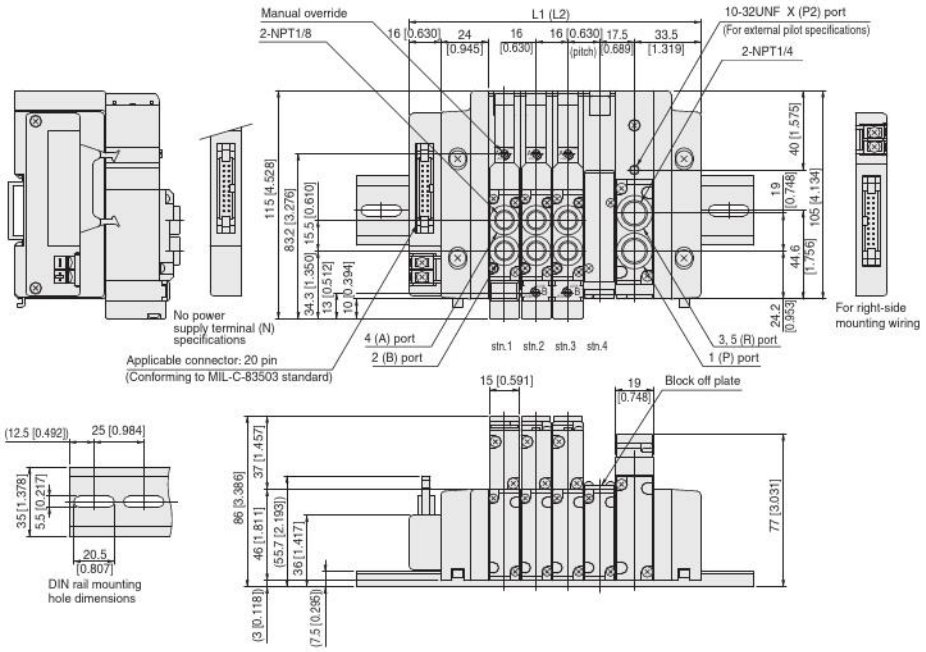

Unit dimensions

Number of units	L1	Length of DIN rail	L2 Note	Length of DIN rail Note
2	115 [4.528]	150 [5.906]	134 [5.276]	175 [6.890]
3	131 [5.157]	175 [6.890]	150 [5.906]	200 [7.874]
4	147 [5.787]	200 [7.874]	166 [6.535]	200 [7.874]
5	163 [6.417]	200 [7.874]	182 [7.165]	225 [8.858]
6	179 [7.047]	225 [8.858]	198 [7.795]	250 [9.843]
7	195 [7.677]	250 [9.843]	214 [8.425]	250 [9.843]
8	211 [8.307]	250 [9.843]	230 [9.055]	275 [10.827]
9	227 [8.937]	275 [10.827]	246 [9.685]	300 [11.811]
10	243 [9.567]	300 [11.811]	262 [10.315]	300 [11.811]
11	259 [10.197]	300 [11.811]	278 [10.945]	325 [12.795]
12	275 [10.827]	325 [12.795]	294 [11.575]	350 [13.780]
13	291 [11.457]	325 [12.795]	310 [12.205]	350 [13.780]
14	307 [12.087]	350 [13.780]	326 [12.835]	375 [14.764]
15	323 [12.717]	375 [14.764]	342 [13.465]	375 [14.764]
16	339 [13.346]	375 [14.764]	358 [14.094]	400 [15.748]

Note: When two piping blocks are used.

* For right-side mounting wiring (-R), add 3 mm [0.118 in] to the L1 (L2) dimension.

F15M Number of valves PHL Pilot specifications (Base piping type)

With manifold outlet port female thread block
Flat cable connector 26-pin specifications

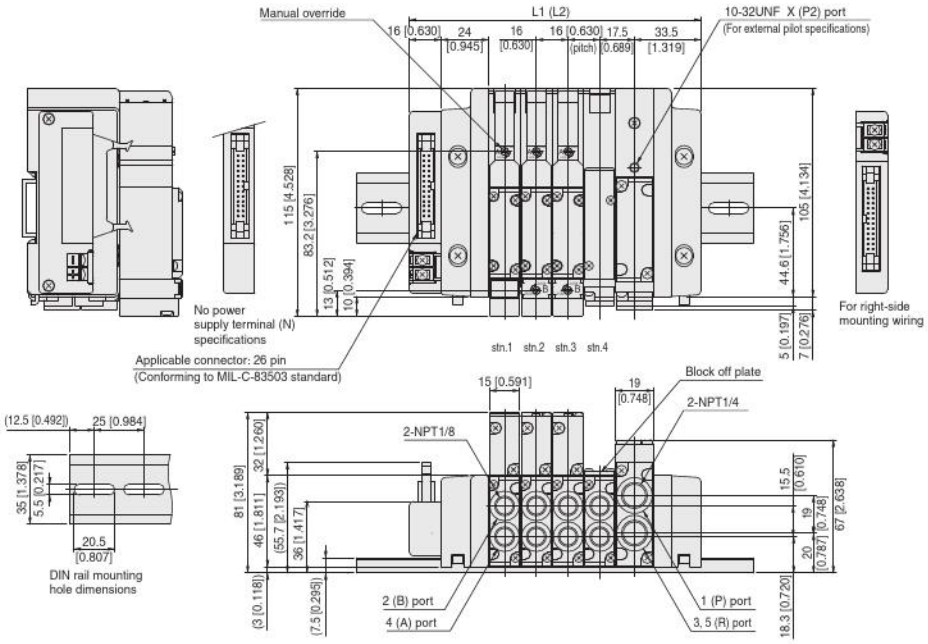

Unit dimensions

Number of units	L1	Length of DIN rail	L2 Note	Length of DIN rail Note
2	115 [4.528]	150 [5.906]	134 [5.276]	175 [6.890]
3	131 [5.157]	175 [6.890]	150 [5.906]	200 [7.874]
4	147 [5.787]	200 [7.874]	166 [6.535]	200 [7.874]
5	163 [6.417]	200 [7.874]	182 [7.165]	225 [8.858]
6	179 [7.047]	225 [8.858]	198 [7.795]	250 [9.843]
7	195 [7.677]	250 [9.843]	214 [8.425]	250 [9.843]
8	211 [8.307]	250 [9.843]	230 [9.055]	275 [10.827]
9	227 [8.937]	275 [10.827]	246 [9.685]	300 [11.811]
10	243 [9.567]	300 [11.811]	262 [10.315]	300 [11.811]
11	259 [10.197]	300 [11.811]	278 [10.945]	325 [12.795]
12	275 [10.827]	325 [12.795]	294 [11.575]	350 [13.780]
13	291 [11.457]	325 [12.795]	310 [12.205]	350 [13.780]
14	307 [12.087]	350 [13.780]	326 [12.835]	375 [14.764]
15	323 [12.717]	375 [14.764]	342 [13.465]	375 [14.764]
16	339 [13.346]	375 [14.764]	358 [14.094]	400 [15.748]
17	355 [13.976]	400 [15.748]	374 [14.724]	425 [16.732]
18	371 [14.606]	425 [16.732]	390 [15.354]	425 [16.732]
19	387 [15.236]	425 [16.732]	406 [15.984]	450 [17.717]
20	403 [15.866]	450 [17.717]	422 [16.614]	475 [18.701]

Note: When two piping blocks are used.

* For right-side mounting wiring (-R), add 3 mm [0.118 in] to the L1 (L2) dimension.

F15M Number of valves PH Pilot specifications (Direct piping type)

With valve outlet port female thread block
Flat cable connector 26-pin specifications

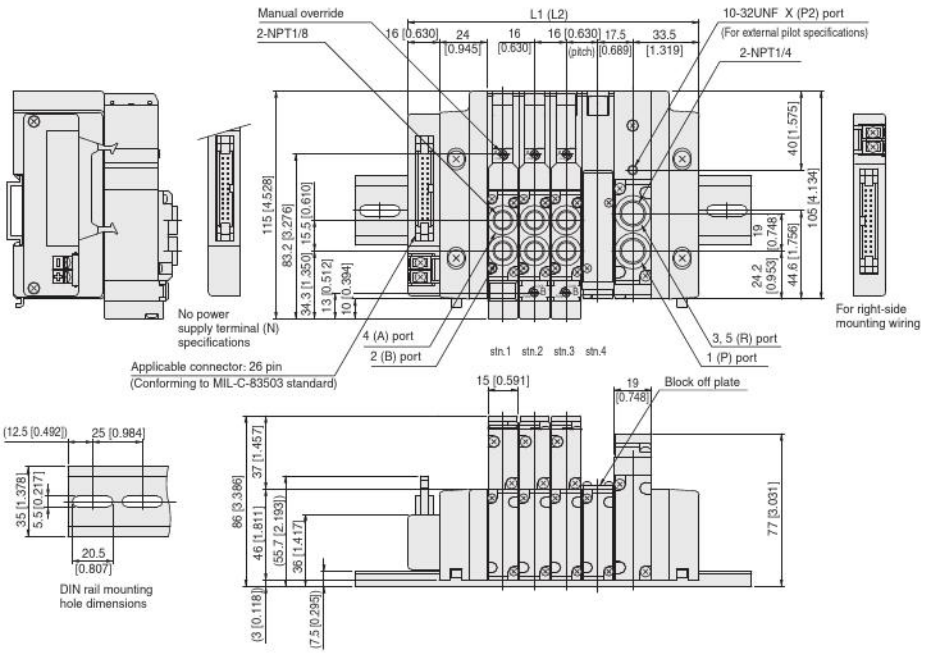

Unit dimensions

Number of units	L1	Length of DIN rail	L2 Note	Length of DIN rail Note
2	115 [4.528]	150 [5.906]	134 [5.276]	175 [6.890]
3	131 [5.157]	175 [6.890]	150 [5.906]	200 [7.874]
4	147 [5.787]	200 [7.874]	166 [6.535]	200 [7.874]
5	163 [6.417]	200 [7.874]	182 [7.165]	225 [8.858]
6	179 [7.047]	225 [8.858]	198 [7.795]	250 [9.843]
7	195 [7.677]	250 [9.843]	214 [8.425]	250 [9.843]
8	211 [8.307]	250 [9.843]	230 [9.055]	275 [10.827]
9	227 [8.937]	275 [10.827]	246 [9.685]	300 [11.811]
10	243 [9.567]	300 [11.811]	262 [10.315]	300 [11.811]
11	259 [10.197]	300 [11.811]	278 [10.945]	325 [12.795]
12	275 [10.827]	325 [12.795]	294 [11.575]	350 [13.780]
13	291 [11.457]	325 [12.795]	310 [12.205]	350 [13.780]
14	307 [12.087]	350 [13.780]	326 [12.835]	375 [14.764]
15	323 [12.717]	375 [14.764]	342 [13.465]	375 [14.764]
16	339 [13.346]	375 [14.764]	358 [14.094]	400 [15.748]
17	355 [13.976]	400 [15.748]	374 [14.724]	425 [16.732]
18	371 [14.606]	425 [16.732]	390 [15.354]	425 [16.732]
19	387 [15.236]	425 [16.732]	406 [15.984]	450 [17.717]
20	403 [15.866]	450 [17.717]	422 [16.614]	475 [18.701]

Note: When two piping blocks are used.

* For right-side mounting wiring (-R), add 3 mm [0.118 in] to the L1 (L2) dimension.

F15M Number of valves PHL Pilot specifications (Base piping type)

With manifold outlet port female thread block
D-sub connector 25-pin specifications

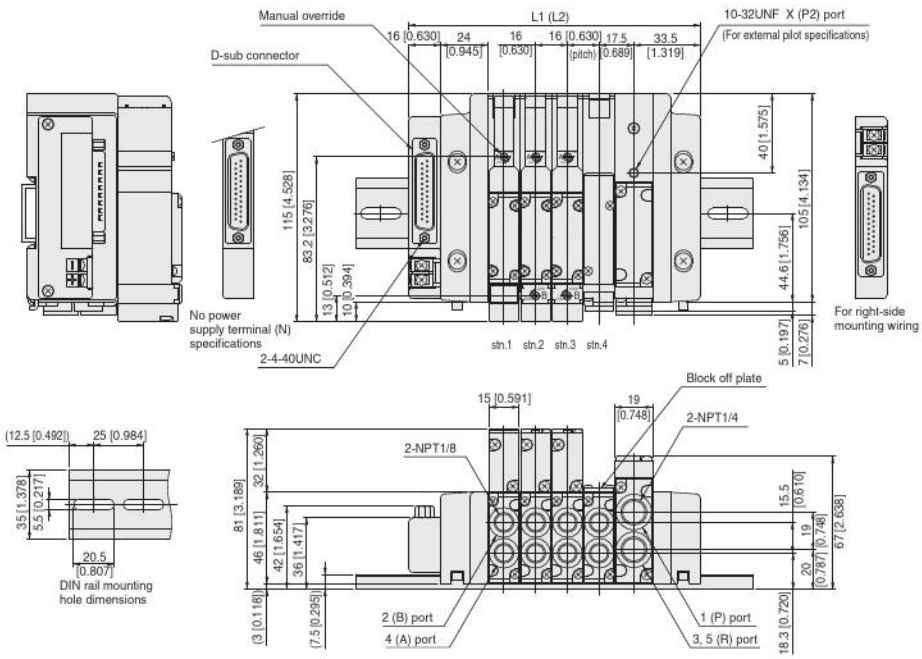

Unit dimensions

Number of units	L1	Length of DIN rail	L2 Note	Length of DIN rail Note
2	115 [4.528]	150 [5.906]	134 [5.276]	175 [6.890]
3	131 [5.157]	175 [6.890]	150 [5.906]	200 [7.874]
4	147 [5.787]	200 [7.874]	166 [6.535]	200 [7.874]
5	163 [6.417]	200 [7.874]	182 [7.165]	225 [8.858]
6	179 [7.047]	225 [8.858]	198 [7.795]	250 [9.843]
7	195 [7.677]	250 [9.843]	214 [8.425]	250 [9.843]
8	211 [8.307]	250 [9.843]	230 [9.055]	275 [10.827]
9	227 [8.937]	275 [10.827]	246 [9.685]	300 [11.811]
10	243 [9.567]	300 [11.811]	262 [10.315]	300 [11.811]
11	259 [10.197]	300 [11.811]	278 [10.945]	325 [12.795]
12	275 [10.827]	325 [12.795]	294 [11.575]	350 [13.780]
13	291 [11.457]	325 [12.795]	310 [12.205]	350 [13.780]
14	307 [12.087]	350 [13.780]	326 [12.835]	375 [14.764]
15	323 [12.717]	375 [14.764]	342 [13.465]	375 [14.764]
16	339 [13.346]	375 [14.764]	358 [14.094]	400 [15.748]
17	355 [13.976]	400 [15.748]	374 [14.724]	425 [16.732]
18	371 [14.606]	425 [16.732]	390 [15.354]	425 [16.732]
19	387 [15.236]	425 [16.732]	406 [15.984]	450 [17.717]
20	403 [15.866]	450 [17.717]	422 [16.614]	475 [18.701]

Note: When two piping blocks are used.

* For right-side mounting wiring (-R), add 3 mm [0.118 in] to the L1 (L2) dimension.

F15M Number of valves PH Pilot specifications (Direct piping type)

With valve outlet port female thread block
D-sub connector 25-pin specifications

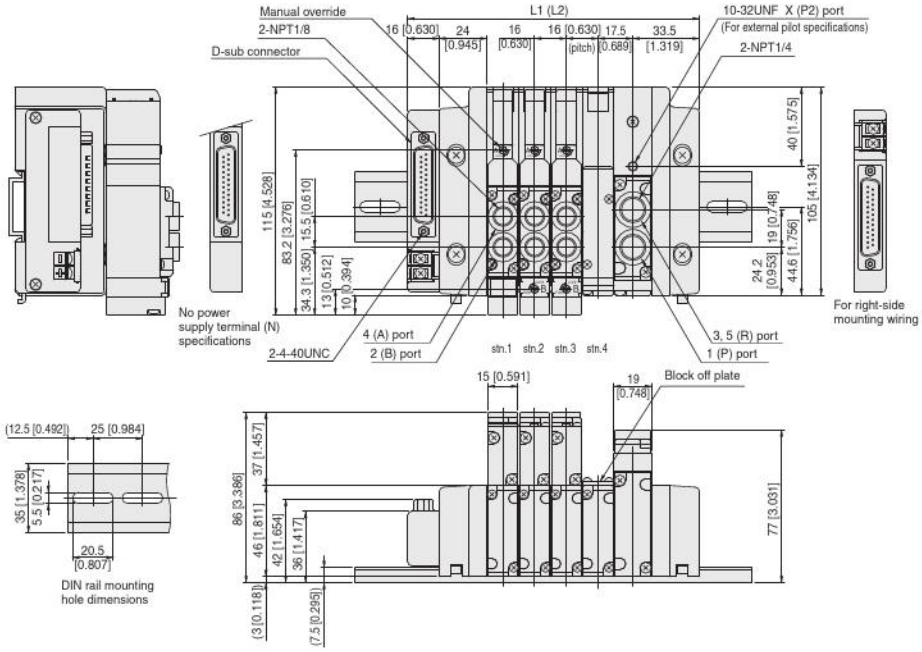

Unit dimensions

Number of units	L1	Length of DIN rail	L2 Note	Length of DIN rail Note
2	115 [4.528]	150 [5.906]	134 [5.276]	175 [6.890]
3	131 [5.157]	175 [6.890]	150 [5.906]	200 [7.874]
4	147 [5.787]	200 [7.874]	166 [6.535]	200 [7.874]
5	163 [6.417]	200 [7.874]	182 [7.165]	225 [8.858]
6	179 [7.047]	225 [8.858]	198 [7.795]	250 [9.843]
7	195 [7.677]	250 [9.843]	214 [8.425]	250 [9.843]
8	211 [8.307]	250 [9.843]	230 [9.055]	275 [10.827]
9	227 [8.937]	275 [10.827]	246 [9.685]	300 [11.811]
10	243 [9.567]	300 [11.811]	262 [10.315]	300 [11.811]
11	259 [10.197]	300 [11.811]	278 [10.945]	325 [12.795]
12	275 [10.827]	325 [12.795]	294 [11.575]	350 [13.780]
13	291 [11.457]	325 [12.795]	310 [12.205]	350 [13.780]
14	307 [12.087]	350 [13.780]	326 [12.835]	375 [14.764]
15	323 [12.717]	375 [14.764]	342 [13.465]	375 [14.764]
16	339 [13.346]	375 [14.764]	358 [14.094]	400 [15.748]
17	355 [13.976]	400 [15.748]	374 [14.724]	425 [16.732]
18	371 [14.606]	425 [16.732]	390 [15.354]	425 [16.732]
19	387 [15.236]	425 [16.732]	406 [15.984]	450 [17.717]
20	403 [15.866]	450 [17.717]	422 [16.614]	475 [18.701]

Note: When two piping blocks are used.

* For right-side mounting wiring (-R), add 3 mm [0.118 in] to the L1 (L2) dimension.

F15M Number of valves PHL Pilot specifications (Base piping type)

With manifold outlet port female thread block
D-sub connector 37-pin specifications

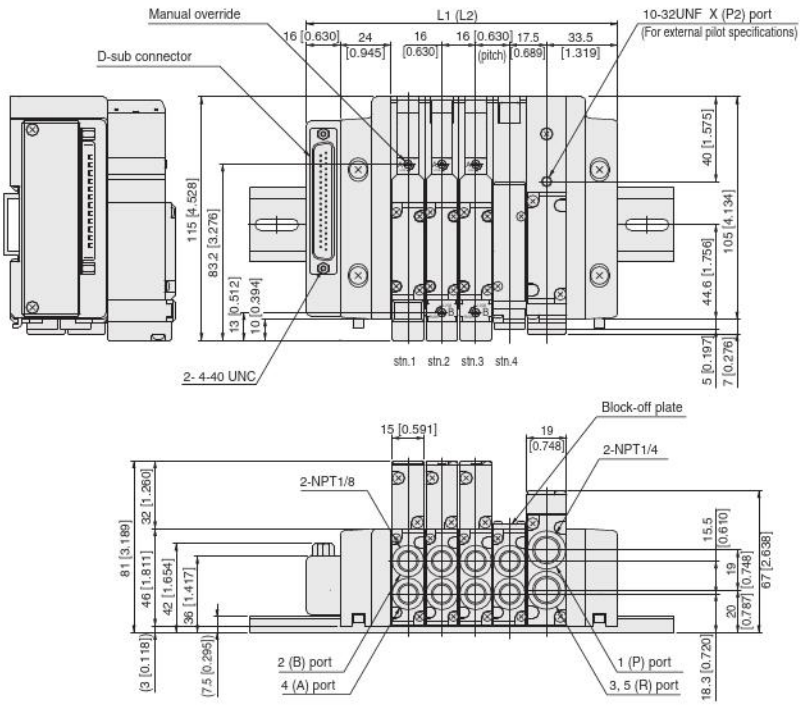

Unit dimensions

Number of units	L1	Length of DIN rail	L2 Note	Length of DIN rail Note
2	115 [4.528]	150 [5.906]	134 [5.276]	175 [6.890]
3	131 [5.157]	175 [6.890]	150 [5.906]	200 [7.874]
4	147 [5.787]	200 [7.874]	166 [6.535]	200 [7.874]
5	163 [6.417]	200 [7.874]	182 [7.165]	225 [8.858]
6	179 [7.047]	225 [8.858]	198 [7.795]	250 [9.843]
7	195 [7.677]	250 [9.843]	214 [8.425]	250 [9.843]
8	211 [8.307]	250 [9.843]	230 [9.055]	275 [10.827]
9	227 [8.937]	275 [10.827]	246 [9.685]	300 [11.811]
10	243 [9.567]	300 [11.811]	262 [10.315]	300 [11.811]
11	259 [10.197]	300 [11.811]	278 [10.945]	325 [12.795]
12	275 [10.827]	325 [12.795]	294 [11.575]	350 [13.780]
13	291 [11.457]	325 [12.795]	310 [12.205]	350 [13.780]
14	307 [12.087]	350 [13.780]	326 [12.835]	375 [14.764]
15	323 [12.717]	375 [14.764]	342 [13.465]	375 [14.764]
16	339 [13.346]	375 [14.764]	358 [14.094]	400 [15.748]
17	355 [13.976]	400 [15.748]	374 [14.724]	425 [16.732]
18	371 [14.606]	425 [16.732]	390 [15.354]	425 [16.732]
19	387 [15.236]	425 [16.732]	406 [15.984]	450 [17.717]
20	403 [15.866]	450 [17.717]	422 [16.614]	475 [18.701]

Note: When two piping blocks are used.

* For right-side mounting wiring (-R), add 3 mm [0.118 in] to the L1 (L2) dimension.

F15M Number of valves PH Pilot specifications (Base piping type)

With valve outlet port female thread block
D-sub connector 37-pin specifications

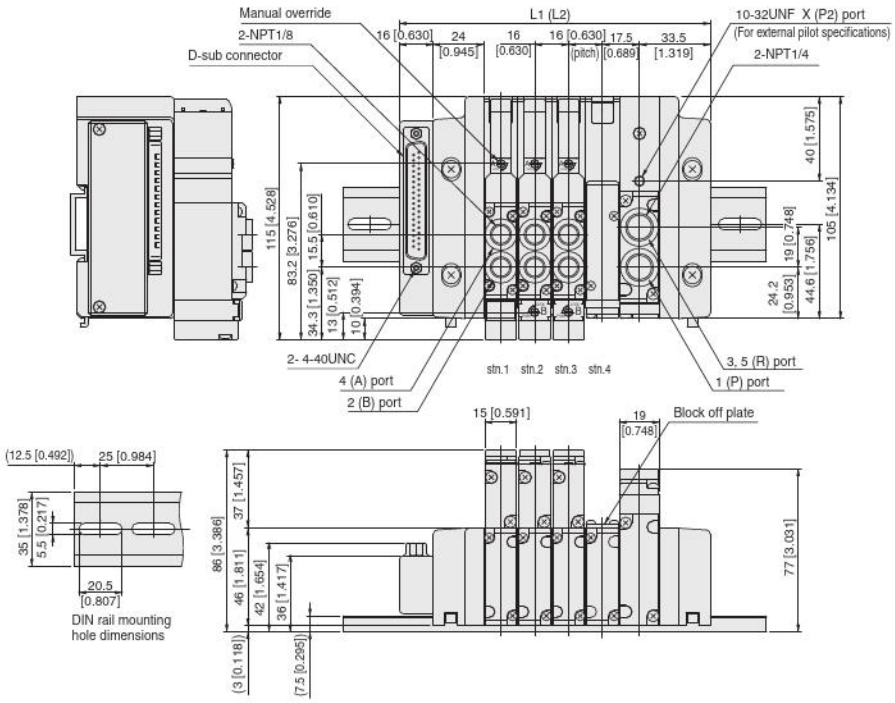

Unit dimensions

Number of units	L1	Length of DIN rail	L2 Note	Length of DIN rail Note
2	115 [4.528]	150 [5.906]	134 [5.276]	175 [6.890]
3	131 [5.157]	175 [6.890]	150 [5.906]	200 [7.874]
4	147 [5.787]	200 [7.874]	166 [6.535]	200 [7.874]
5	163 [6.417]	200 [7.874]	182 [7.165]	225 [8.858]
6	179 [7.047]	225 [8.858]	198 [7.795]	250 [9.843]
7	195 [7.677]	250 [9.843]	214 [8.425]	250 [9.843]
8	211 [8.307]	250 [9.843]	230 [9.055]	275 [10.827]
9	227 [8.937]	275 [10.827]	246 [9.685]	300 [11.811]
10	243 [9.567]	300 [11.811]	262 [10.315]	300 [11.811]
11	259 [10.197]	300 [11.811]	278 [10.945]	325 [12.795]
12	275 [10.827]	325 [12.795]	294 [11.575]	350 [13.780]
13	291 [11.457]	325 [12.795]	310 [12.205]	350 [13.780]
14	307 [12.087]	350 [13.780]	326 [12.835]	375 [14.764]
15	323 [12.717]	375 [14.764]	342 [13.465]	375 [14.764]
16	339 [13.346]	375 [14.764]	358 [14.094]	400 [15.748]
17	355 [13.976]	400 [15.748]	374 [14.724]	425 [16.732]
18	371 [14.606]	425 [16.732]	390 [15.354]	425 [16.732]
19	387 [15.236]	425 [16.732]	406 [15.984]	450 [17.717]
20	403 [15.866]	450 [17.717]	422 [16.614]	475 [18.701]

Note: When two piping blocks are used.

* For right-side mounting wiring (-R), add 3 mm [0.118 in] to the L1 (L2) dimension.

F15M [Number of valves] PHL [Pilot specifications] (Base piping type)

With manifold outlet port female thread block
Terminal block type

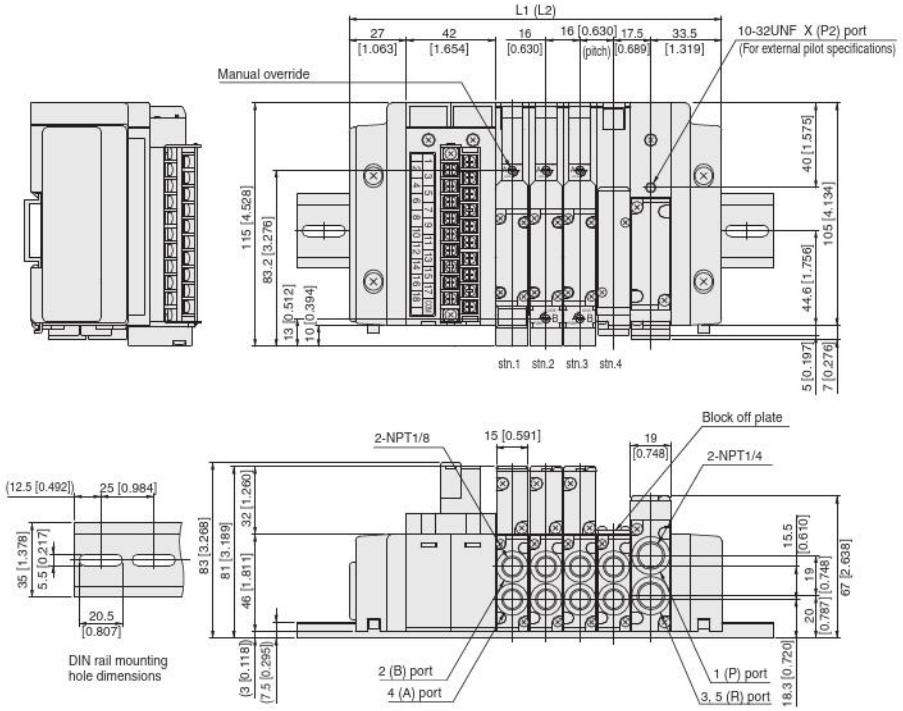

Unit dimensions

Number of units	L1	Length of DIN rail	L2 Note	Length of DIN rail Note
2	144 [5.669]	175 [6.890]	163 [6.417]	200 [7.874]
3	160 [6.299]	200 [7.874]	179 [7.047]	225 [8.858]
4	176 [6.929]	225 [8.858]	195 [7.677]	225 [8.858]
5	192 [7.559]	225 [8.858]	211 [8.307]	250 [9.843]
6	208 [8.189]	250 [9.843]	227 [8.937]	275 [10.827]
7	224 [8.819]	250 [9.843]	243 [9.567]	275 [10.827]
8	240 [9.449]	275 [10.827]	259 [10.197]	300 [11.811]
9	256 [10.079]	300 [11.811]	275 [10.827]	300 [11.811]
10	272 [10.709]	300 [11.811]	291 [11.457]	325 [12.795]
11	288 [11.339]	325 [12.795]	307 [12.087]	350 [13.780]
12	304 [11.969]	350 [13.780]	323 [12.717]	350 [13.780]
13	320 [12.598]	350 [13.780]	339 [13.346]	375 [14.764]
14	336 [13.228]	375 [14.764]	355 [13.976]	400 [15.748]
15	352 [13.858]	400 [15.748]	371 [14.606]	400 [15.748]
16	368 [14.488]	400 [15.748]	387 [15.236]	425 [16.732]
17	384 [15.118]	425 [16.732]	403 [15.866]	450 [17.717]
18	400 [15.748]	425 [16.732]	419 [16.496]	450 [17.717]

Note: When two piping blocks are used.

F15M [Number of valves] PH [Pilot specifications] (Direct piping type)

With valve outlet port female thread block
Terminal block type

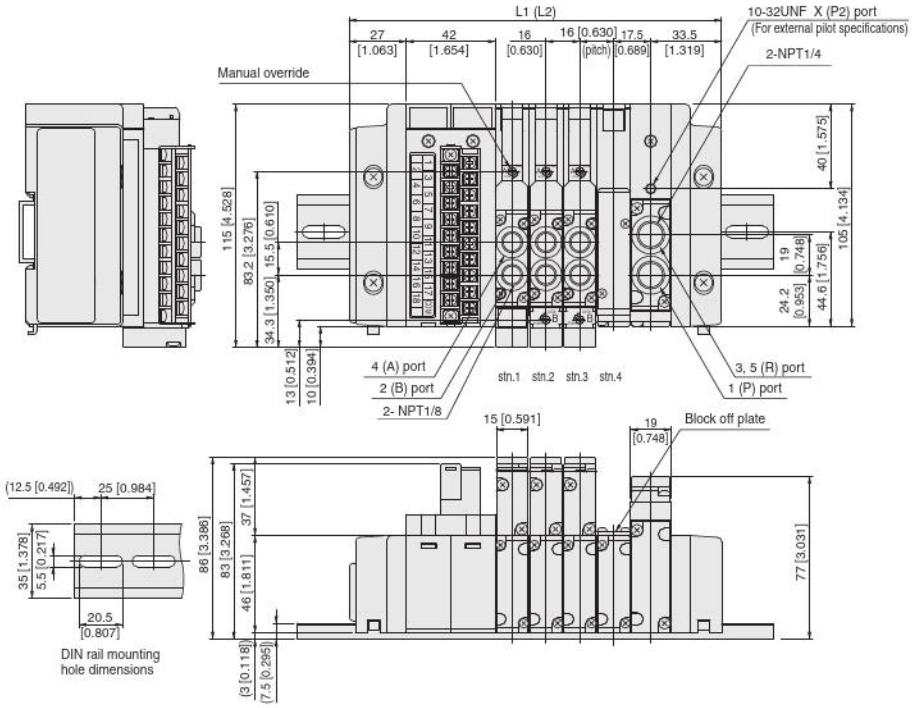

Unit dimensions

Number of units	L1	Length of DIN rail	L2 Note	Length of DIN rail Note
2	144 [5.669]	175 [6.890]	163 [6.417]	200 [7.874]
3	160 [6.299]	200 [7.874]	179 [7.047]	225 [8.858]
4	176 [6.929]	225 [8.858]	195 [7.677]	225 [8.858]
5	192 [7.559]	225 [8.858]	211 [8.307]	250 [9.843]
6	208 [8.189]	250 [9.843]	227 [8.937]	275 [10.827]
7	224 [8.819]	250 [9.843]	243 [9.567]	275 [10.827]
8	240 [9.449]	275 [10.827]	259 [10.197]	300 [11.811]
9	256 [10.079]	300 [11.811]	275 [10.827]	300 [11.811]
10	272 [10.709]	300 [11.811]	291 [11.457]	325 [12.795]
11	288 [11.339]	325 [12.795]	307 [12.087]	350 [13.780]
12	304 [11.969]	350 [13.780]	323 [12.717]	350 [13.780]
13	320 [12.598]	350 [13.780]	339 [13.346]	375 [14.764]
14	336 [13.228]	375 [14.764]	355 [13.976]	400 [15.748]
15	352 [13.858]	400 [15.748]	371 [14.606]	400 [15.748]
16	368 [14.488]	400 [15.748]	387 [15.236]	425 [16.732]
17	384 [15.118]	425 [16.732]	403 [15.866]	450 [17.717]
18	400 [15.748]	425 [16.732]	419 [16.496]	450 [17.717]

Note: When two piping blocks are used.

F15M [Number of valves] S J/M/L [Pilot specifications] (Base piping type)

With manifold outlet port dual use fitting block
(Models that support integrated serial transmission block)
*For dimensions of EtherCAT, see p. 240.

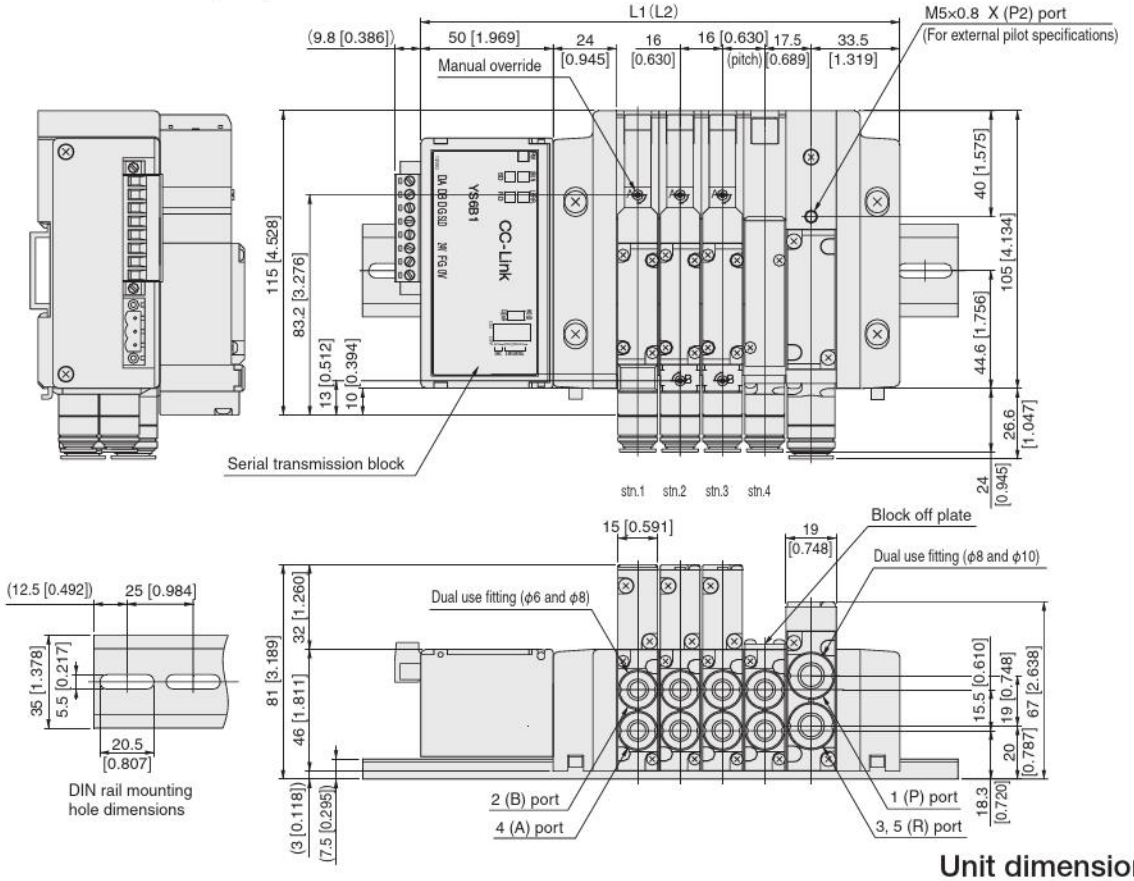

Unit dimensions

Number of units	L1	Length of DIN rail	L2 Note	Length of DIN rail Note
2	149 [5.866]	200 [7.874]	168 [6.614]	225 [8.858]
3	165 [6.496]	225 [8.858]	184 [7.244]	225 [8.858]
4	181 [7.126]	225 [8.858]	200 [7.874]	250 [9.843]
5	197 [7.756]	250 [9.843]	216 [8.504]	275 [10.827]
6	213 [8.386]	275 [10.827]	232 [9.134]	275 [10.827]
7	229 [9.016]	275 [10.827]	248 [9.764]	300 [11.811]
8	245 [9.646]	300 [11.811]	264 [10.394]	325 [12.795]
9	261 [10.276]	325 [12.795]	280 [11.024]	325 [12.795]
10	277 [10.906]	325 [12.795]	296 [11.654]	350 [13.780]
11	293 [11.535]	350 [13.780]	312 [12.283]	375 [14.764]
12	309 [12.165]	350 [13.780]	328 [12.913]	375 [14.764]
13	325 [12.795]	375 [14.764]	344 [13.543]	400 [15.748]
14	341 [13.425]	400 [15.748]	360 [14.173]	400 [15.748]
15	357 [14.055]	400 [15.748]	376 [14.803]	425 [16.732]
16	373 [14.685]	425 [16.732]	392 [15.433]	450 [17.717]
17	389 [15.315]	450 [17.717]	408 [16.063]	475 [18.701]
18	405 [15.945]	450 [17.717]	424 [16.693]	475 [18.701]
19	421 [16.575]	475 [18.701]	440 [17.323]	500 [19.685]
20	437 [17.205]	500 [19.685]	456 [17.953]	500 [19.685]

Note: When two piping blocks are used.

* For right-side mounting wiring (-R), add 3 mm [0.118 in] to the L1 (L2) dimension.

F15M [Number of valves] SHL [Pilot specifications] (Base piping type)

With manifold outlet port female thread block

(Models that support integrated serial transmission block)

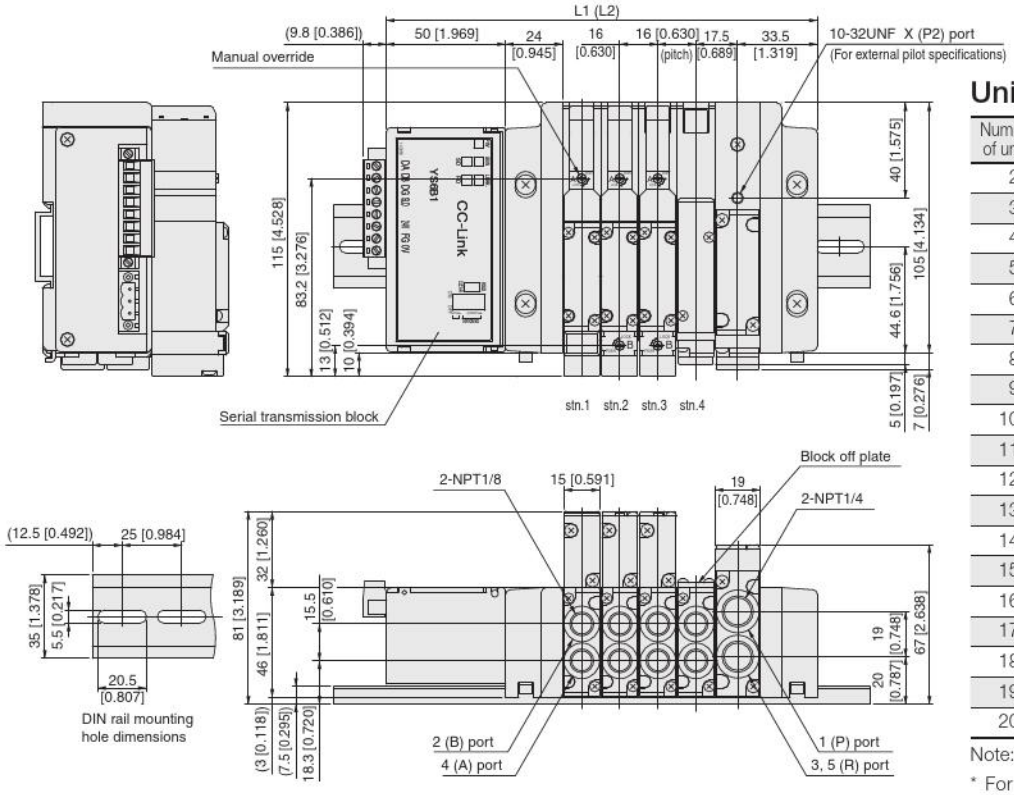

Unit dimensions

Number of units	L1	Length of DIN rail	L2 Note	Length of DIN rail Note
2	149 [5.866]	200 [7.874]	168 [6.614]	225 [8.858]
3	165 [6.496]	225 [8.858]	184 [7.244]	225 [8.858]
4	181 [7.126]	225 [8.858]	200 [7.874]	250 [9.843]
5	197 [7.756]	250 [9.843]	216 [8.504]	275 [10.827]
6	213 [8.386]	275 [10.827]	232 [9.134]	275 [10.827]
7	229 [9.016]	275 [10.827]	248 [9.764]	300 [11.811]
8	245 [9.646]	300 [11.811]	264 [10.394]	325 [12.795]
9	261 [10.276]	325 [12.795]	280 [11.024]	325 [12.795]
10	277 [10.906]	325 [12.795]	296 [11.654]	350 [13.780]
11	293 [11.535]	350 [13.780]	312 [12.283]	375 [14.764]
12	309 [12.165]	350 [13.780]	328 [12.913]	375 [14.764]
13	325 [12.795]	375 [14.764]	344 [13.543]	400 [15.748]
14	341 [13.425]	400 [15.748]	360 [14.173]	400 [15.748]
15	357 [14.055]	400 [15.748]	376 [14.803]	425 [16.732]
16	373 [14.685]	425 [16.732]	392 [15.433]	450 [17.717]
17	389 [15.315]	450 [17.717]	408 [16.063]	475 [18.701]
18	405 [15.945]	450 [17.717]	424 [16.693]	475 [18.701]
19	421 [16.575]	475 [18.701]	440 [17.323]	500 [19.685]
20	437 [17.205]	500 [19.685]	456 [17.953]	500 [19.685]

Note: When two piping blocks are used.

* For right-side mounting wiring (-R), add 3 mm [0.118 in] to the L1 (L2) dimension.

F15M [Number of valves] SH [Pilot specifications] (Direct piping type)

With valve outlet port female thread block

(Models that support integrated serial transmission block)

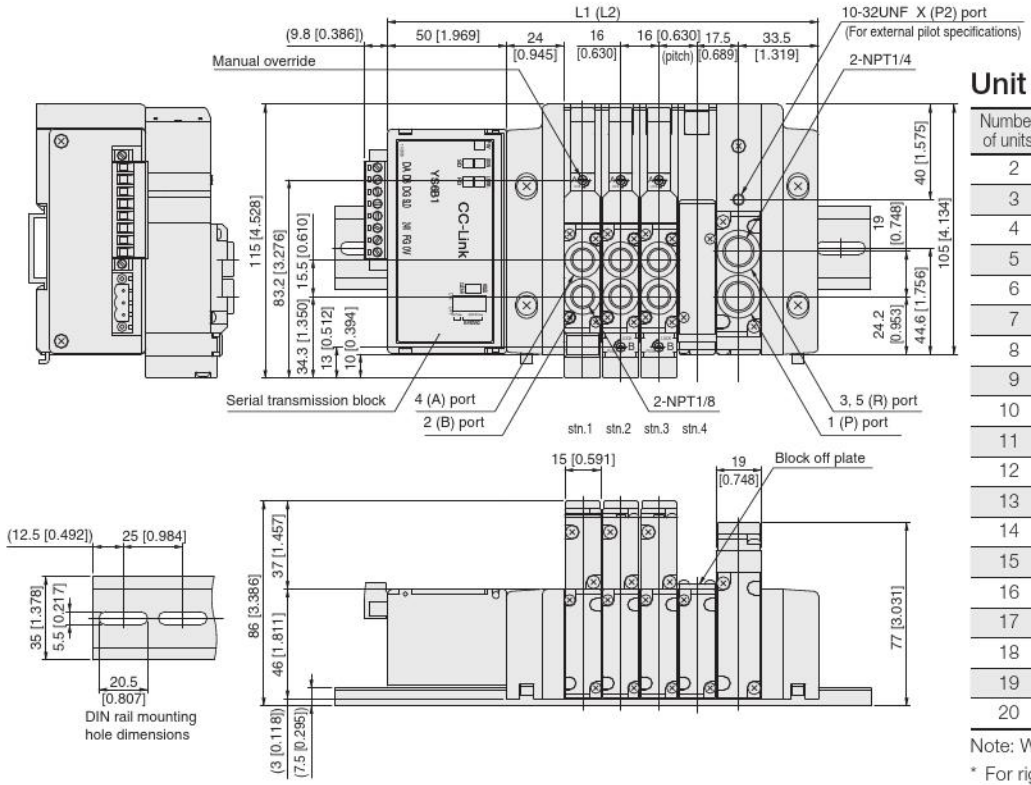

Unit dimensions

Number of units	L1	Length of DIN rail	L2 Note	Length of DIN rail Note
2	149 [5.866]	200 [7.874]	168 [6.614]	225 [8.858]
3	165 [6.496]	225 [8.858]	184 [7.244]	225 [8.858]
4	181 [7.126]	225 [8.858]	200 [7.874]	250 [9.843]
5	197 [7.756]	250 [9.843]	216 [8.504]	275 [10.827]
6	213 [8.386]	275 [10.827]	232 [9.134]	275 [10.827]
7	229 [9.016]	275 [10.827]	248 [9.764]	300 [11.811]
8	245 [9.646]	300 [11.811]	264 [10.394]	325 [12.795]
9	261 [10.276]	325 [12.795]	280 [11.024]	325 [12.795]
10	277 [10.906]	325 [12.795]	296 [11.654]	350 [13.780]
11	293 [11.535]	350 [13.780]	312 [12.283]	375 [14.764]
12	309 [12.165]	350 [13.780]	328 [12.913]	375 [14.764]
13	325 [12.795]	375 [14.764]	344 [13.543]	400 [15.748]
14	341 [13.425]	400 [15.748]	360 [14.173]	400 [15.748]
15	357 [14.055]	400 [15.748]	376 [14.803]	425 [16.732]
16	373 [14.685]	425 [16.732]	392 [15.433]	450 [17.717]
17	389 [15.315]	450 [17.717]	408 [16.063]	475 [18.701]
18	405 [15.945]	450 [17.717]	424 [16.693]	475 [18.701]
19	421 [16.575]	475 [18.701]	440 [17.323]	500 [19.685]
20	437 [17.205]	500 [19.685]	456 [17.953]	500 [19.685]

Note: When two piping blocks are used.

* For right-side mounting wiring (-R), add 3 mm [0.118 in] to the L1 (L2) dimension.

F15M [Number of valves] S J/M/L [Pilot specifications] (Base piping type)

With manifold outlet port dual use fitting block

(Models that support stand-alone serial transmission block)

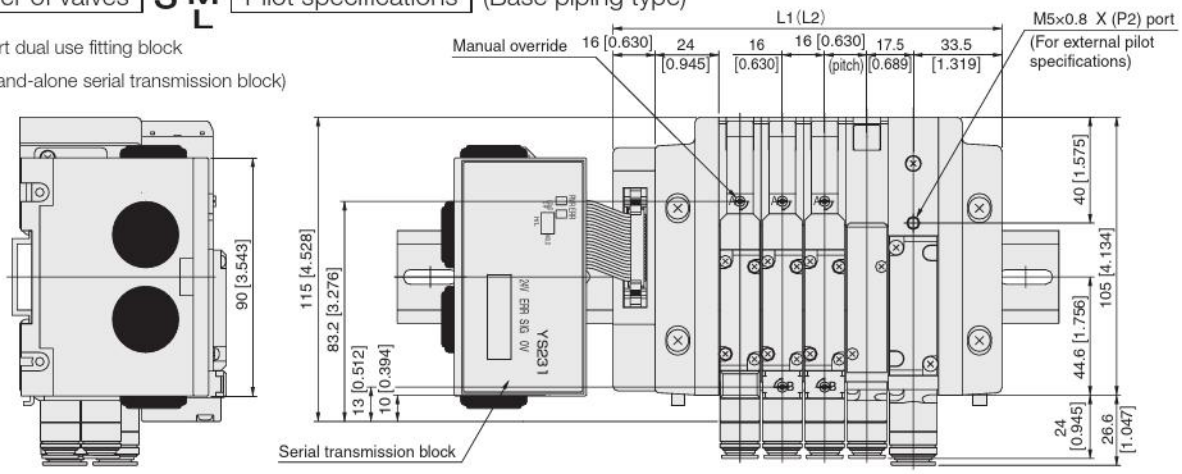

Unit dimensions

Number of units	L1	Length of DIN rail	L2 Note	Length of DIN rail Note
2	115 [4.528]	225 [8.858]	134 [5.276]	225 [8.858]
3	131 [5.157]	225 [8.858]	150 [5.906]	250 [9.843]
4	147 [5.787]	250 [9.843]	166 [6.535]	275 [10.827]
5	163 [6.417]	275 [10.827]	182 [7.165]	275 [10.827]
6	179 [7.047]	275 [10.827]	198 [7.795]	300 [11.811]
7	195 [7.677]	300 [11.811]	214 [8.425]	325 [12.795]
8	211 [8.307]	300 [11.811]	230 [9.055]	325 [12.795]
9	227 [8.937]	325 [12.795]	246 [9.685]	350 [13.780]
10	243 [9.567]	350 [13.780]	262 [10.315]	375 [14.764]
11	259 [10.197]	350 [13.780]	278 [10.945]	375 [14.764]
12	275 [10.827]	375 [14.764]	294 [11.575]	400 [15.748]
13	291 [11.457]	400 [15.748]	310 [12.205]	400 [15.748]
14	307 [12.087]	400 [15.748]	326 [12.835]	425 [16.732]
15	323 [12.717]	425 [16.732]	342 [13.465]	450 [17.717]
16	339 [13.346]	450 [17.717]	358 [14.094]	450 [17.717]

Note: When two piping blocks are used.

* For right-side mounting wiring (-R), add 3 mm [0.118 in] to the L1 (L2) dimension.

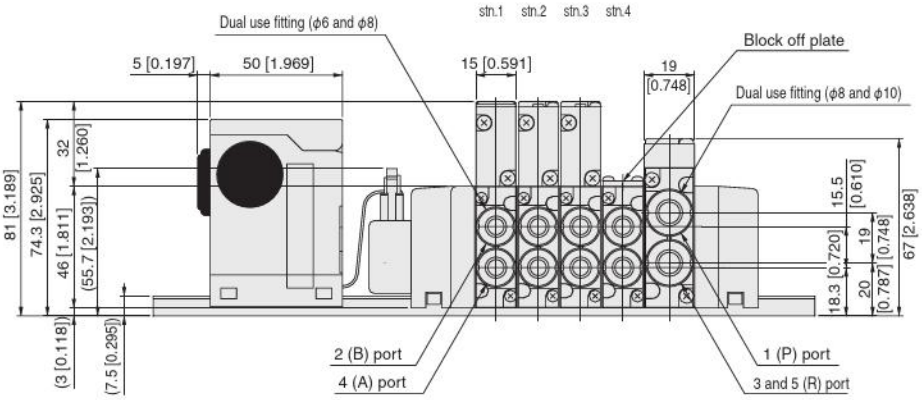

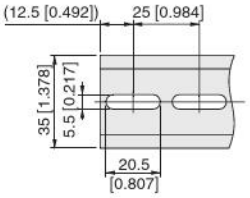

DIN rail mounting hole dimensions

Additional Parts (available separately)

●Muffler: **KM-J10** [for both plug-in and non-plug-in]

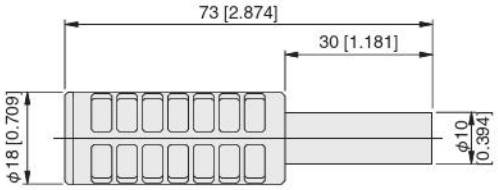

●Muffler: **KM-J6** [for individual exhaust spacer only]

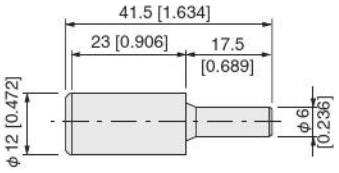

●Muffler: **KM-J8** [for individual exhaust spacer only]

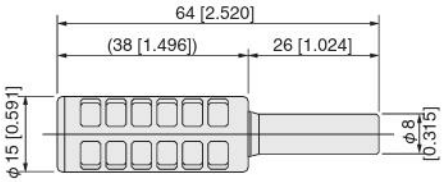

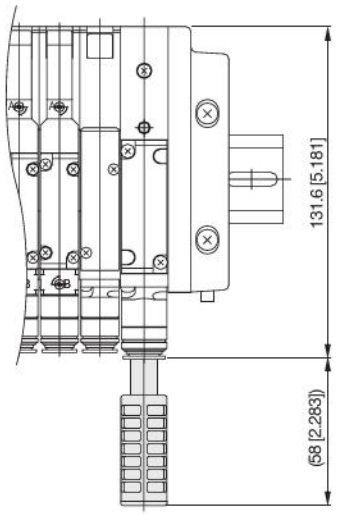

F15M Number of valves SHL Pilot specifications (Base piping type)

With manifold outlet port female thread block

(Models that support stand-alone serial transmission block)

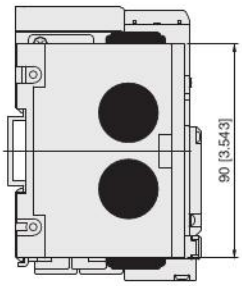

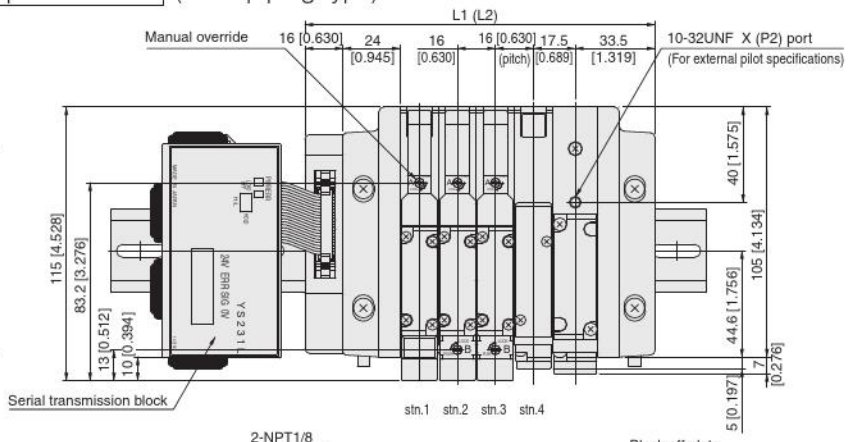

Unit dimensions

Number of units	L1	Length of DIN rail	L2 Note	Length of DIN rail Note
2	115 [4.528]	225 [8.858]	134 [5.276]	225 [8.858]
3	131 [5.157]	225 [8.858]	150 [5.906]	250 [9.843]
4	147 [5.787]	250 [9.843]	166 [6.535]	275 [10.827]
5	163 [6.417]	275 [10.827]	182 [7.165]	275 [10.827]
6	179 [7.047]	275 [10.827]	198 [7.795]	300 [11.811]
7	195 [7.677]	300 [11.811]	214 [8.425]	325 [12.795]
8	211 [8.307]	300 [11.811]	230 [9.055]	325 [12.795]
9	227 [8.937]	325 [12.795]	246 [9.685]	350 [13.780]
10	243 [9.567]	350 [13.780]	262 [10.315]	375 [14.764]
11	259 [10.197]	350 [13.780]	278 [10.945]	375 [14.764]
12	275 [10.827]	375 [14.764]	294 [11.575]	400 [15.748]
13	291 [11.457]	400 [15.748]	310 [12.205]	400 [15.748]
14	307 [12.087]	400 [15.748]	326 [12.835]	425 [16.732]
15	323 [12.717]	425 [16.732]	342 [13.465]	450 [17.717]
16	339 [13.346]	450 [17.717]	358 [14.094]	450 [17.717]

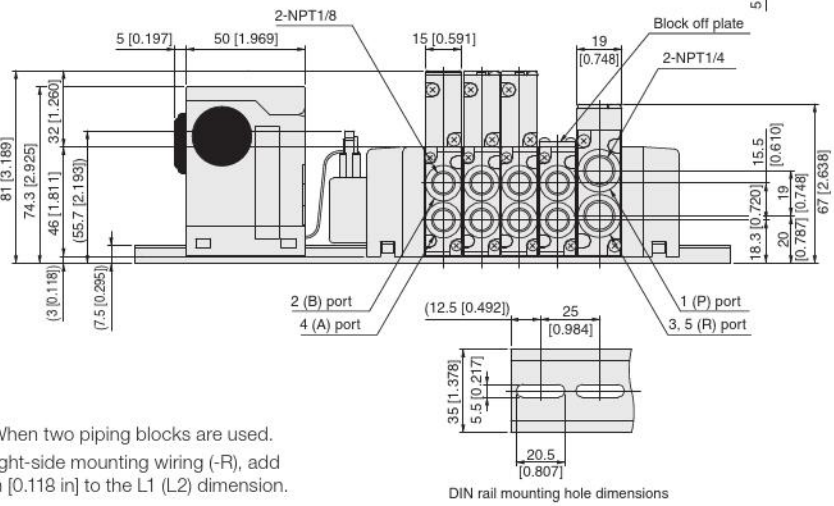

Note: When two piping blocks are used.

* For right-side mounting wiring (-R), add 3 mm [0.118 in] to the L1 (L2) dimension.

F15M Number of valves SH Pilot specifications (Direct piping type)

With valve outlet port female thread block

(Models that support stand-alone serial transmission block)

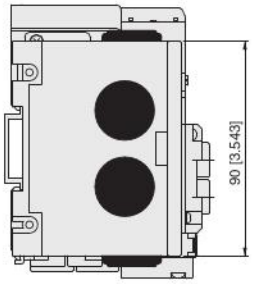

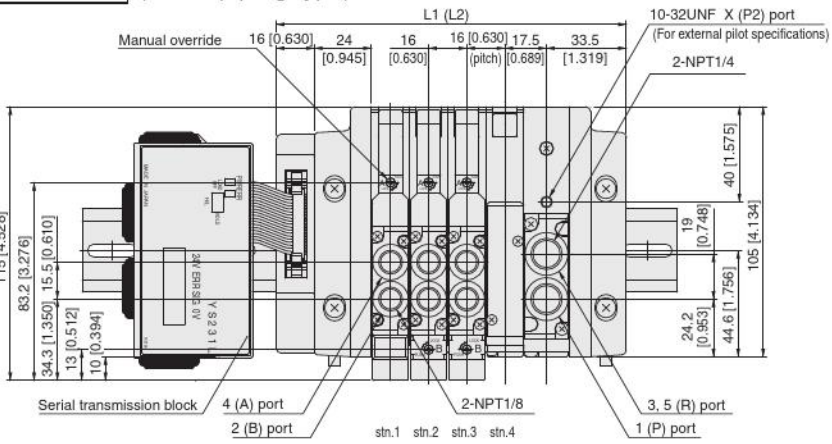

Unit dimensions

Number of units	L1	Length of DIN rail	L2 Note	Length of DIN rail Note
2	115 [4.528]	225 [8.858]	134 [5.276]	225 [8.858]
3	131 [5.157]	225 [8.858]	150 [5.906]	250 [9.843]
4	147 [5.787]	250 [9.843]	166 [6.535]	275 [10.827]
5	163 [6.417]	275 [10.827]	182 [7.165]	275 [10.827]
6	179 [7.047]	275 [10.827]	198 [7.795]	300 [11.811]
7	195 [7.677]	300 [11.811]	214 [8.425]	325 [12.795]
8	211 [8.307]	300 [11.811]	230 [9.055]	325 [12.795]
9	227 [8.937]	325 [12.795]	246 [9.685]	350 [13.780]
10	243 [9.567]	350 [13.780]	262 [10.315]	375 [14.764]
11	259 [10.197]	350 [13.780]	278 [10.945]	375 [14.764]
12	275 [10.827]	375 [14.764]	294 [11.575]	400 [15.748]
13	291 [11.457]	400 [15.748]	310 [12.205]	400 [15.748]
14	307 [12.087]	400 [15.748]	326 [12.835]	425 [16.732]
15	323 [12.717]	425 [16.732]	342 [13.465]	450 [17.717]
16	339 [13.346]	450 [17.717]	358 [14.094]	450 [17.717]

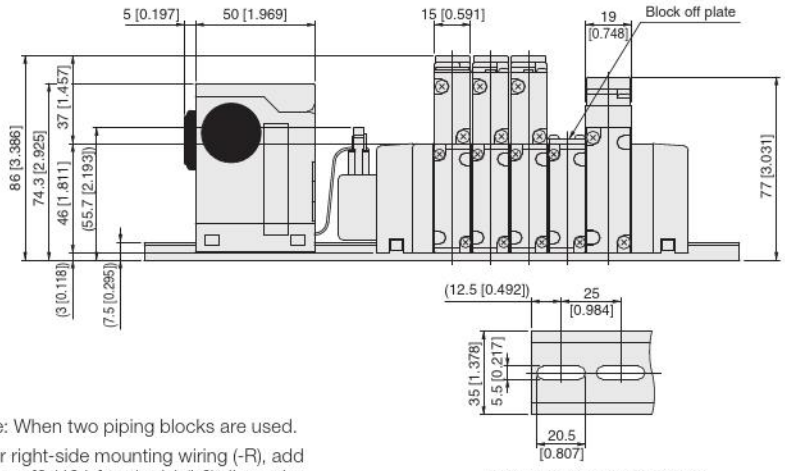

Note: When two piping blocks are used.

* For right-side mounting wiring (-R), add 3 mm [0.118 in] to the L1 (L2) dimension.

F15M [Number of valves] SHL [Pilot specifications] (Base piping type)

With manifold outlet port female thread block

(Ether CAT)

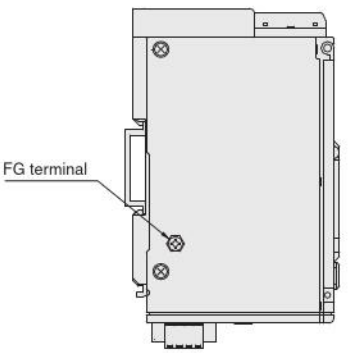

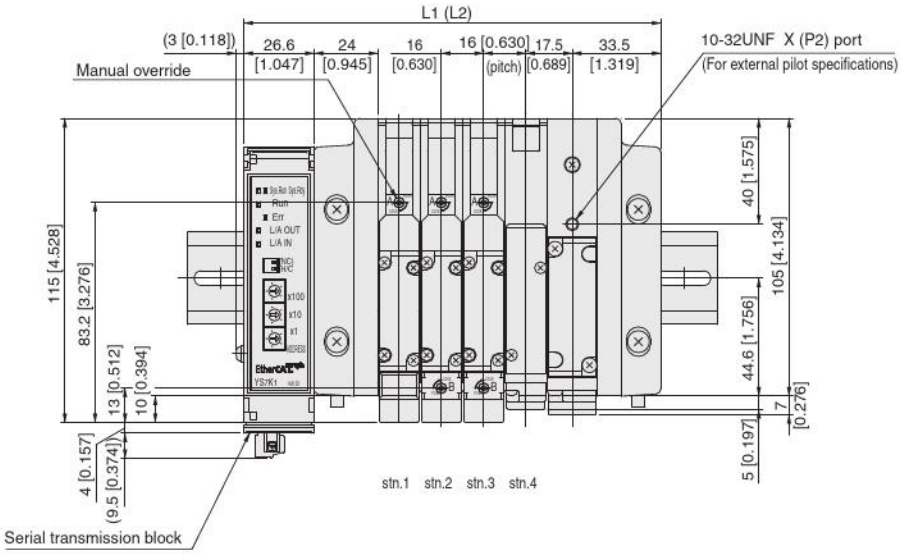

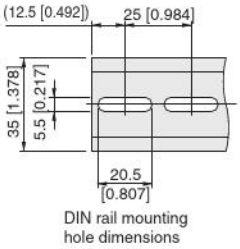

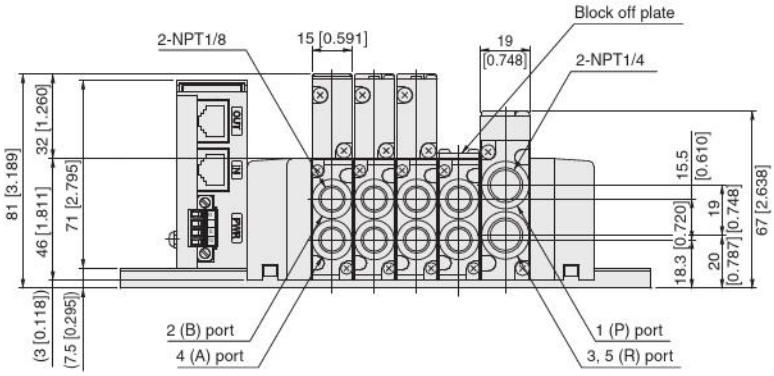

Unit dimensions

Number of units	L1	Length of DIN rail	L2 Note	Length of DIN rail Note
2	125.6 [4.945]	175 [6.890]	144.6 [5.693]	200 [7.874]
3	141.6 [5.575]	200 [7.874]	160.6 [6.323]	200 [7.874]
4	157.6 [6.205]	200 [7.874]	176.6 [6.953]	225 [8.858]
5	173.6 [6.835]	225 [8.858]	192.6 [7.583]	250 [9.843]
6	189.6 [7.465]	250 [9.843]	208.6 [8.213]	250 [9.843]
7	205.6 [8.094]	250 [9.843]	224.6 [8.843]	275 [10.827]
8	221.6 [8.724]	275 [10.827]	240.6 [9.472]	300 [11.811]
9	237.6 [9.354]	300 [11.811]	256.6 [10.102]	300 [11.811]
10	253.6 [9.984]	300 [11.811]	272.6 [10.732]	325 [12.795]
11	269.6 [10.614]	325 [12.795]	288.6 [11.362]	350 [13.780]
12	285.6 [11.244]	325 [12.795]	304.6 [11.992]	350 [13.780]
13	301.6 [11.874]	350 [13.780]	320.6 [12.622]	375 [14.764]
14	317.6 [12.504]	375 [14.764]	336.6 [13.252]	375 [14.764]
15	333.6 [13.134]	375 [14.764]	352.6 [13.882]	400 [15.748]
16	349.6 [13.764]	400 [15.748]	368.6 [14.512]	425 [16.732]
17	365.6 [14.394]	425 [16.732]	384.6 [15.142]	450 [17.717]
18	381.6 [15.024]	425 [16.732]	400.6 [15.772]	450 [17.717]
19	397.6 [15.654]	450 [17.717]	416.6 [16.402]	475 [18.701]
20	413.6 [16.283]	475 [18.701]	432.6 [17.031]	475 [18.701]

Note: When two piping blocks are used.

* For right-side mounting wiring (-R), add 3 mm [0.118 in] to the L1 (L2) dimension.

F15M Number of valves SH Pilot specifications (Direct piping type)

With valve outlet port female thread block

(Ether CAT)

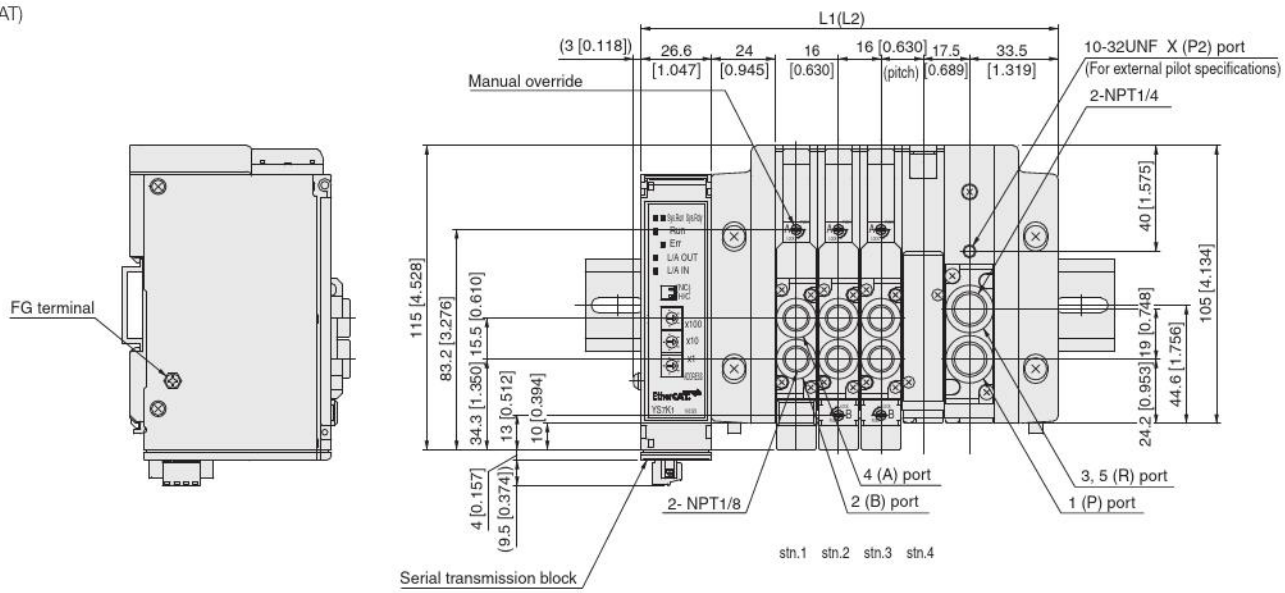

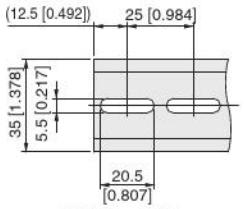

DIN rail mounting hole dimensions

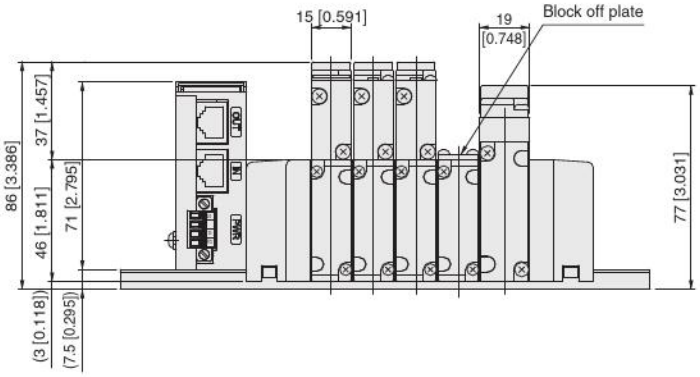

Unit dimensions

Number of units	L1	Length of DIN rail	L2 Note	Length of DIN rail Note
2	125.6 [4.945]	175 [6.890]	144.6 [5.693]	200 [7.874]
3	141.6 [5.575]	200 [7.874]	160.6 [6.323]	200 [7.874]
4	157.6 [6.205]	200 [7.874]	176.6 [6.953]	225 [8.858]
5	173.6 [6.835]	225 [8.858]	192.6 [7.583]	250 [9.843]
6	189.6 [7.465]	250 [9.843]	208.6 [8.213]	250 [9.843]
7	205.6 [8.094]	250 [9.843]	224.6 [8.843]	275 [10.827]
8	221.6 [8.724]	275 [10.827]	240.6 [9.472]	300 [11.811]
9	237.6 [9.354]	300 [11.811]	256.6 [10.102]	300 [11.811]
10	253.6 [9.984]	300 [11.811]	272.6 [10.732]	325 [12.795]
11	269.6 [10.614]	325 [12.795]	288.6 [11.362]	350 [13.780]
12	285.6 [11.244]	325 [12.795]	304.6 [11.992]	350 [13.780]
13	301.6 [11.874]	350 [13.780]	320.6 [12.622]	375 [14.764]
14	317.6 [12.504]	375 [14.764]	336.6 [13.252]	375 [14.764]
15	333.6 [13.134]	375 [14.764]	352.6 [13.882]	400 [15.748]
16	349.6 [13.764]	400 [15.748]	368.6 [14.512]	425 [16.732]
17	365.6 [14.394]	425 [16.732]	384.6 [15.142]	450 [17.717]
18	381.6 [15.024]	425 [16.732]	400.6 [15.772]	450 [17.717]
19	397.6 [15.654]	450 [17.717]	416.6 [16.402]	475 [18.701]
20	413.6 [16.283]	475 [18.701]	432.6 [17.031]	475 [18.701]

Note: When two piping blocks are used.

* For right-side mounting wiring (-R), add 3 mm [0.118 in] to the L1 (L2) dimension.

F15M [Number of units] XN J/M/L [Pilot specifications] - [Piping block specifications] (Base piping type)

With manifold outlet port dual use fitting block
S type plug connector

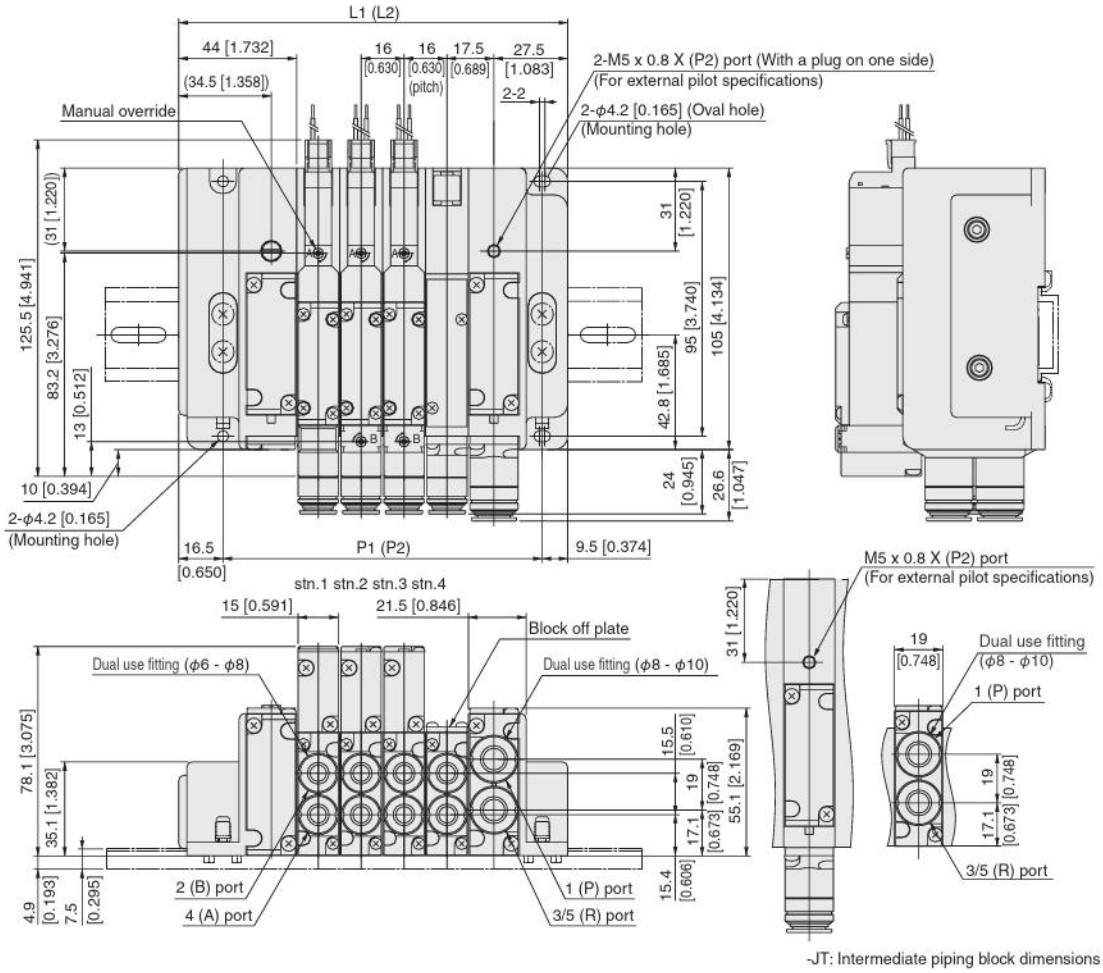

-JT: Intermediate piping block dimensions

Unit dimensions

Number of units	L1	P1	Length of DIN rail	L2*	P2*	Length of DIN rail Note
2	113 [4.449]	87 [3.425]	175 [6.890]	-	-	-
3	129 [5.079]	103 [4.055]	175 [6.890]	148 [5.827]	122 [4.803]	175 [6.890]
4	145 [5.709]	119 [4.685]	200 [7.874]	164 [6.457]	138 [5.433]	200 [7.874]
5	161 [6.339]	135 [5.315]	225 [8.858]	180 [7.087]	154 [6.063]	225 [8.858]
6	177 [6.969]	151 [5.945]	225 [8.858]	196 [7.717]	170 [6.693]	225 [8.858]
7	193 [7.598]	167 [6.575]	250 [9.843]	212 [8.346]	186 [7.323]	250 [9.843]
8	209 [8.228]	183 [7.205]	250 [9.843]	228 [8.976]	202 [7.953]	275 [10.827]
9	225 [8.858]	199 [7.835]	275 [10.827]	244 [9.606]	218 [8.583]	275 [10.827]
10	241 [9.488]	215 [8.465]	300 [11.811]	260 [10.236]	234 [9.213]	300 [11.811]
11	257 [10.118]	231 [9.094]	300 [11.811]	276 [10.866]	250 [9.843]	325 [12.795]
12	273 [10.748]	247 [9.724]	325 [12.795]	292 [11.496]	266 [10.472]	325 [12.795]
13	289 [11.378]	263 [10.354]	350 [13.780]	308 [12.126]	282 [11.102]	350 [13.780]
14	305 [12.008]	279 [10.984]	350 [13.780]	324 [12.756]	298 [11.732]	350 [13.780]
15	321 [12.638]	295 [11.614]	375 [14.764]	340 [13.386]	314 [12.362]	375 [14.764]
16	337 [13.268]	311 [12.244]	400 [15.748]	356 [14.016]	330 [12.992]	400 [15.748]
17	353 [13.898]	327 [12.874]	400 [15.748]	372 [14.646]	346 [13.622]	400 [15.748]
18	369 [14.528]	343 [13.504]	425 [16.732]	388 [15.276]	362 [14.252]	425 [16.732]
19	385 [15.157]	359 [14.134]	450 [17.717]	404 [15.906]	378 [14.882]	450 [17.717]
20	401 [15.787]	375 [14.764]	450 [17.717]	420 [16.535]	394 [15.512]	450 [17.717]
21	-	-	-	436 [17.165]	410 [16.142]	475 [18.701]

Note: When the J□T or MT piping block specifications is selected.

F15M Number of units XN Pilot specifications - Piping block specifications (Direct piping type)

With manifold outlet port dual use fitting block
S type plug connector

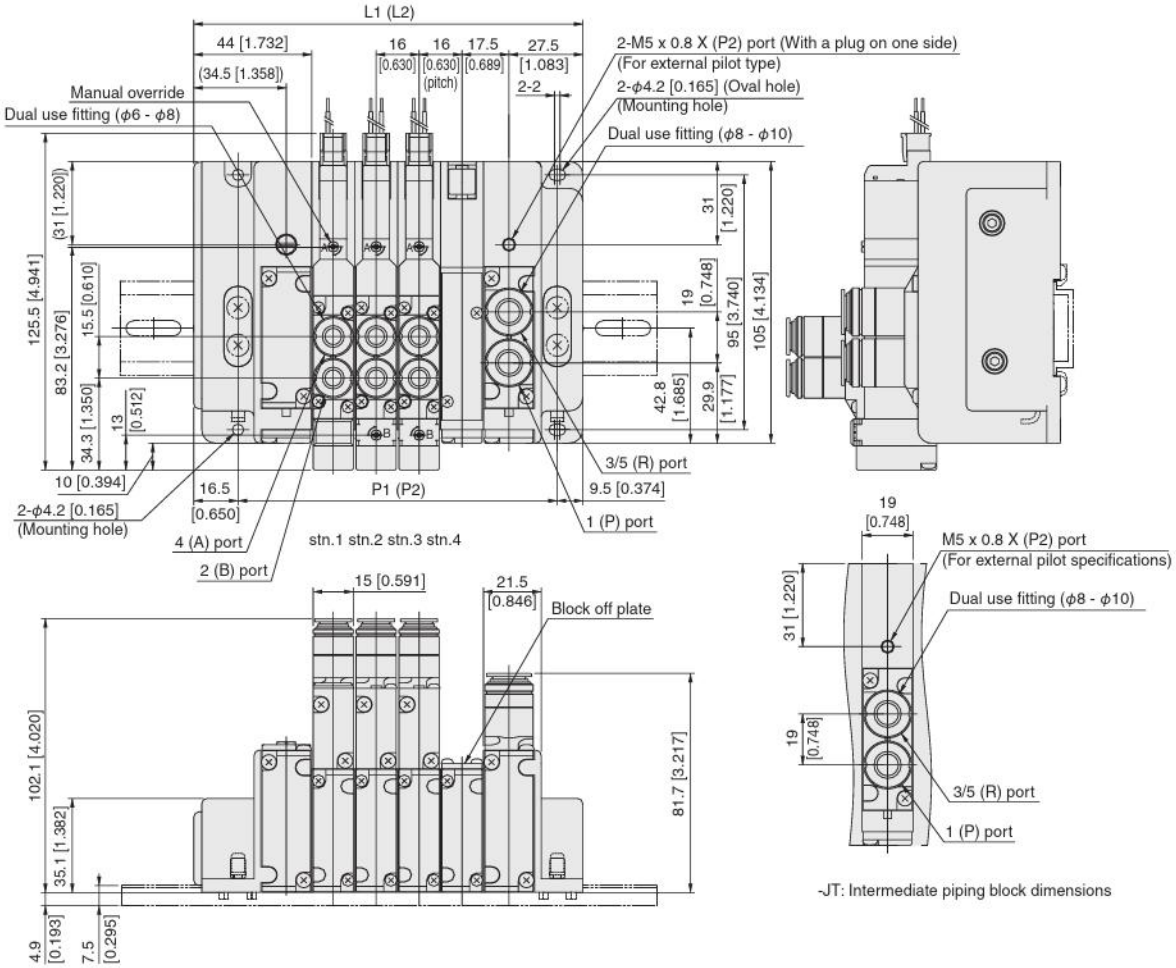

Unit dimensions

Number of units	L1	P1	Length of DIN rail	L2*	P2*	Length of DIN rail Note
2	113 [4.449]	87 [3.425]	175 [6.890]	-	-	-
3	129 [5.079]	103 [4.055]	175 [6.890]	148 [5.827]	122 [4.803]	175 [6.890]
4	145 [5.709]	119 [4.685]	200 [7.874]	164 [6.457]	138 [5.433]	200 [7.874]
5	161 [6.339]	135 [5.315]	225 [8.858]	180 [7.087]	154 [6.063]	225 [8.858]
6	177 [6.969]	151 [5.945]	225 [8.858]	196 [7.717]	170 [6.693]	225 [8.858]
7	193 [7.598]	167 [6.575]	250 [9.843]	212 [8.346]	186 [7.323]	250 [9.843]
8	209 [8.228]	183 [7.205]	250 [9.843]	228 [8.976]	202 [7.953]	275 [10.827]
9	225 [8.858]	199 [7.835]	275 [10.827]	244 [9.606]	218 [8.583]	275 [10.827]
10	241 [9.488]	215 [8.465]	300 [11.811]	260 [10.236]	234 [9.213]	300 [11.811]
11	257 [10.118]	231 [9.094]	300 [11.811]	276 [10.866]	250 [9.843]	325 [12.795]
12	273 [10.748]	247 [9.724]	325 [12.795]	292 [11.496]	266 [10.472]	325 [12.795]
13	289 [11.378]	263 [10.354]	350 [13.780]	308 [12.126]	282 [11.102]	350 [13.780]
14	305 [12.008]	279 [10.984]	350 [13.780]	324 [12.756]	298 [11.732]	350 [13.780]
15	321 [12.638]	295 [11.614]	375 [14.764]	340 [13.386]	314 [12.362]	375 [14.764]
16	337 [13.268]	311 [12.244]	400 [15.748]	356 [14.016]	330 [12.992]	400 [15.748]
17	353 [13.898]	327 [12.874]	400 [15.748]	372 [14.646]	346 [13.622]	400 [15.748]
18	369 [14.528]	343 [13.504]	425 [16.732]	388 [15.276]	362 [14.252]	425 [16.732]
19	385 [15.157]	359 [14.134]	450 [17.717]	404 [15.906]	378 [14.882]	450 [17.717]
20	401 [15.787]	375 [14.764]	450 [17.717]	420 [16.535]	394 [15.512]	450 [17.717]
21	-	-	-	436 [17.165]	410 [16.142]	475 [18.701]

Note: When the J□T or MT piping block specifications is selected.

F15M [Number of units] XP J/M/L [Pilot specifications] (Base piping specifications)

With manifold outlet port dual use fitting block
Flat cable connector 10-pin specifications

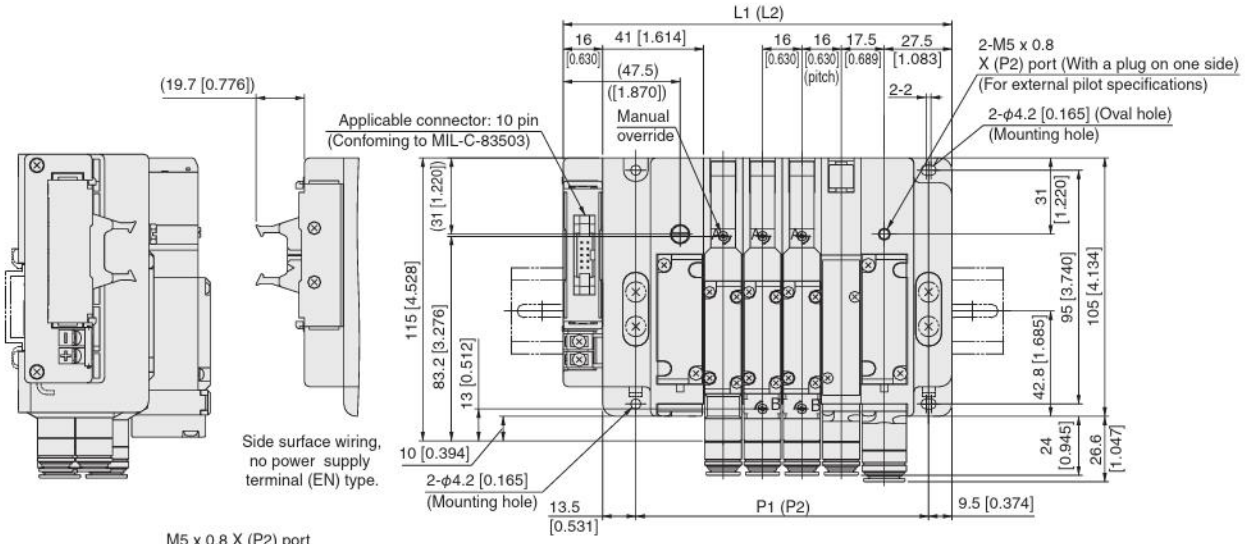

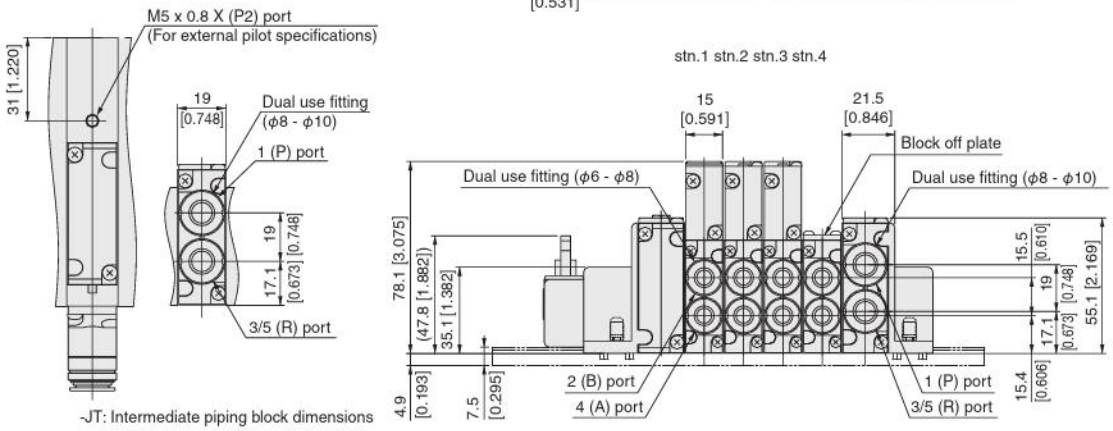

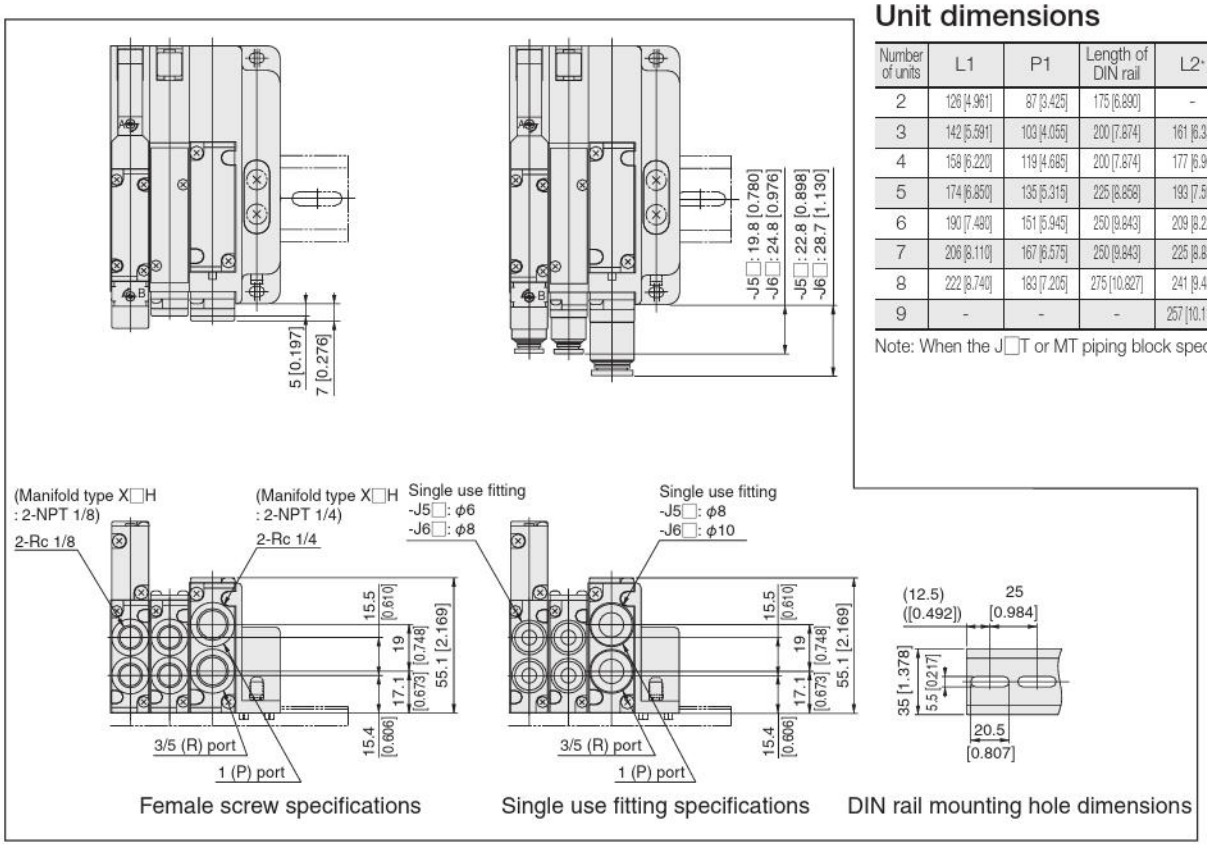

Unit dimensions

Number of units	L1	P1	Length of DIN rail	L2*	P2*	Length of DIN rail Note
2	126 [4.961]	87 [3.425]	175 [6.890]	-	-	-
3	142 [5.591]	103 [4.055]	200 [7.874]	161 [6.339]	122 [4.803]	200 [7.874]
4	158 [6.220]	119 [4.685]	200 [7.874]	177 [6.969]	138 [5.433]	225 [8.858]
5	174 [6.850]	135 [5.315]	225 [8.858]	193 [7.598]	154 [6.063]	225 [8.858]
6	190 [7.480]	151 [5.945]	250 [9.843]	209 [8.228]	170 [6.693]	250 [9.843]
7	206 [8.110]	167 [6.575]	250 [9.843]	225 [8.858]	186 [7.323]	250 [9.843]
8	222 [8.740]	183 [7.205]	275 [10.827]	241 [9.488]	202 [7.953]	275 [10.827]
9	-	-	-	257 [10.118]	218 [8.583]	300 [11.811]

Note: When the J□T or MT piping block specifications is selected.

F15M [Number of units] XP J/M/L [Pilot specifications] (Base piping specifications)

With manifold outlet port dual use fitting block
Flat cable connector 20-pin specifications

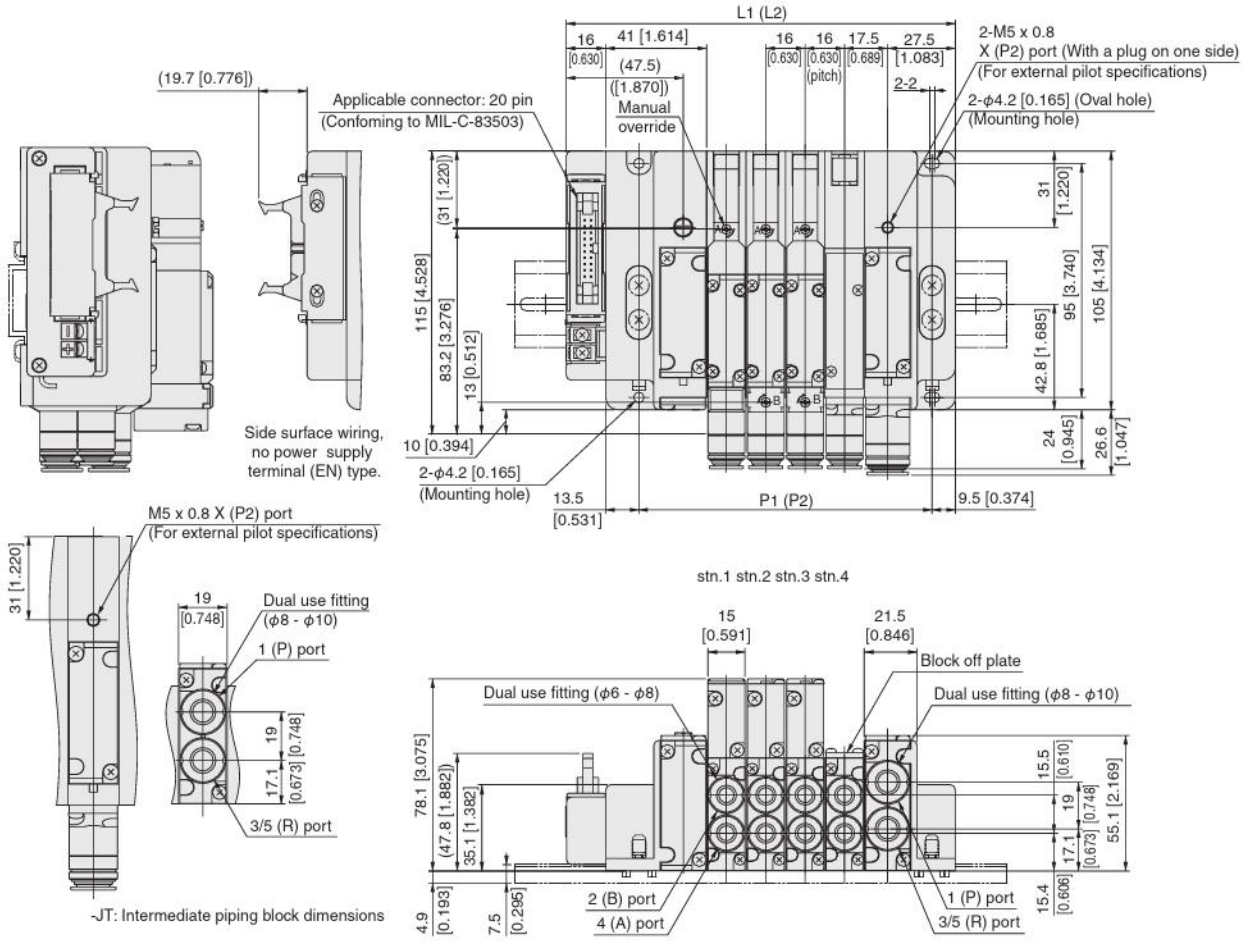

Unit dimensions

Number of units	L1	P1	Length of DIN rail	L2*	P2*	Length of DIN rail Note
2	126 [4.961]	87 [3.425]	175 [6.890]	-	-	-
3	142 [5.591]	103 [4.055]	200 [7.874]	161 [6.339]	122 [4.803]	200 [7.874]
4	158 [6.220]	119 [4.685]	200 [7.874]	177 [6.969]	138 [5.433]	225 [8.858]
5	174 [6.850]	135 [5.315]	225 [8.858]	193 [7.598]	154 [6.063]	225 [8.858]
6	190 [7.480]	151 [5.945]	250 [9.843]	209 [8.228]	170 [6.693]	250 [9.843]
7	206 [8.110]	167 [6.575]	250 [9.843]	225 [8.858]	186 [7.323]	250 [9.843]
8	222 [8.740]	183 [7.205]	275 [10.827]	241 [9.488]	202 [7.953]	275 [10.827]
9	238 [9.370]	199 [7.835]	300 [11.811]	257 [10.118]	218 [8.583]	300 [11.811]
10	254 [10.000]	215 [8.465]	300 [11.811]	273 [10.748]	234 [9.213]	300 [11.811]
11	270 [10.630]	231 [9.094]	325 [12.795]	289 [11.378]	250 [9.843]	325 [12.795]
12	286 [11.260]	247 [9.724]	350 [13.780]	305 [12.008]	266 [10.472]	350 [13.780]
13	302 [11.890]	263 [10.354]	350 [13.780]	321 [12.638]	282 [11.102]	350 [13.780]
14	318 [12.520]	279 [10.984]	375 [14.764]	337 [13.268]	298 [11.732]	375 [14.764]
15	334 [13.150]	295 [11.614]	375 [14.764]	353 [13.898]	314 [12.362]	400 [15.748]
16	350 [13.780]	311 [12.244]	400 [15.748]	369 [14.528]	330 [12.992]	400 [15.748]
17	-	-	-	385 [15.157]	346 [13.622]	425 [16.732]

Note: When the J□T or MT piping block specifications is selected.

F15M Number of units XP J/M/L Pilot specifications (Base piping specifications)

With manifold outlet port dual use fitting block
Flat cable connector 26-pin specifications

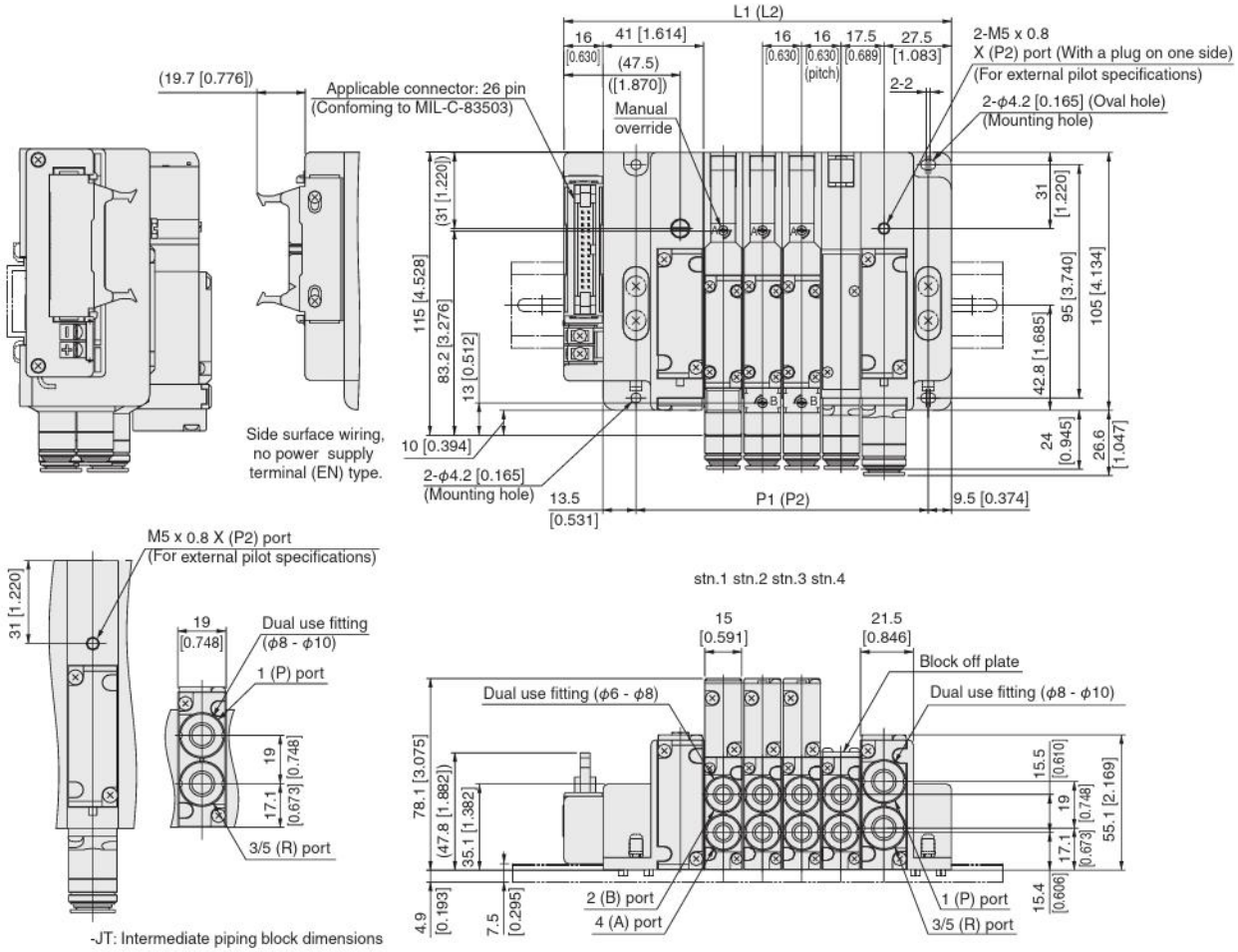

Unit dimensions

Number of units	L1	P1	Length of DIN rail	L2*	P2*	Length of DIN rail Note
2	126 [4.961]	87 [3.425]	175 [6.890]	-	-	-
3	142 [5.591]	103 [4.055]	200 [7.874]	161 [6.339]	122 [4.803]	200 [7.874]
4	158 [6.220]	119 [4.685]	200 [7.874]	177 [6.969]	138 [5.433]	225 [8.858]
5	174 [6.850]	135 [5.315]	225 [8.858]	193 [7.598]	154 [6.063]	225 [8.858]
6	190 [7.480]	151 [5.945]	250 [9.843]	209 [8.228]	170 [6.693]	250 [9.843]
7	206 [8.110]	167 [6.575]	250 [9.843]	225 [8.858]	186 [7.323]	250 [9.843]
8	222 [8.740]	183 [7.205]	275 [10.827]	241 [9.488]	202 [7.953]	275 [10.827]
9	238 [9.370]	199 [7.835]	300 [11.811]	257 [10.118]	218 [8.583]	300 [11.811]
10	254 [10.000]	215 [8.465]	300 [11.811]	273 [10.748]	234 [9.213]	300 [11.811]
11	270 [10.630]	231 [9.094]	325 [12.795]	289 [11.378]	250 [9.843]	325 [12.795]
12	286 [11.260]	247 [9.724]	350 [13.780]	305 [12.008]	266 [10.472]	350 [13.780]
13	302 [11.890]	263 [10.354]	350 [13.780]	321 [12.638]	282 [11.102]	350 [13.780]
14	318 [12.520]	279 [10.984]	375 [14.764]	337 [13.268]	298 [11.732]	375 [14.764]
15	334 [13.150]	295 [11.614]	375 [14.764]	353 [13.898]	314 [12.362]	400 [15.748]
16	350 [13.780]	311 [12.244]	400 [15.748]	369 [14.528]	330 [12.992]	400 [15.748]
17	366 [14.409]	327 [12.874]	425 [16.732]	385 [15.157]	346 [13.622]	425 [16.732]
18	382 [15.039]	343 [13.504]	425 [16.732]	401 [15.787]	362 [14.252]	450 [17.717]
19	398 [15.669]	359 [14.134]	450 [17.717]	417 [16.417]	378 [14.882]	450 [17.717]
20	414 [16.299]	375 [14.764]	475 [18.701]	433 [17.047]	394 [15.512]	475 [18.701]
21	-	-	-	449 [17.677]	410 [16.142]	475 [18.701]

Note: When the J□T or MT piping block specifications is selected.

F15M [Number of units] XP J/M/L [Pilot specifications] (Base piping specifications)

With manifold outlet port dual use fitting block
Flat cable connector 26-pin specifications

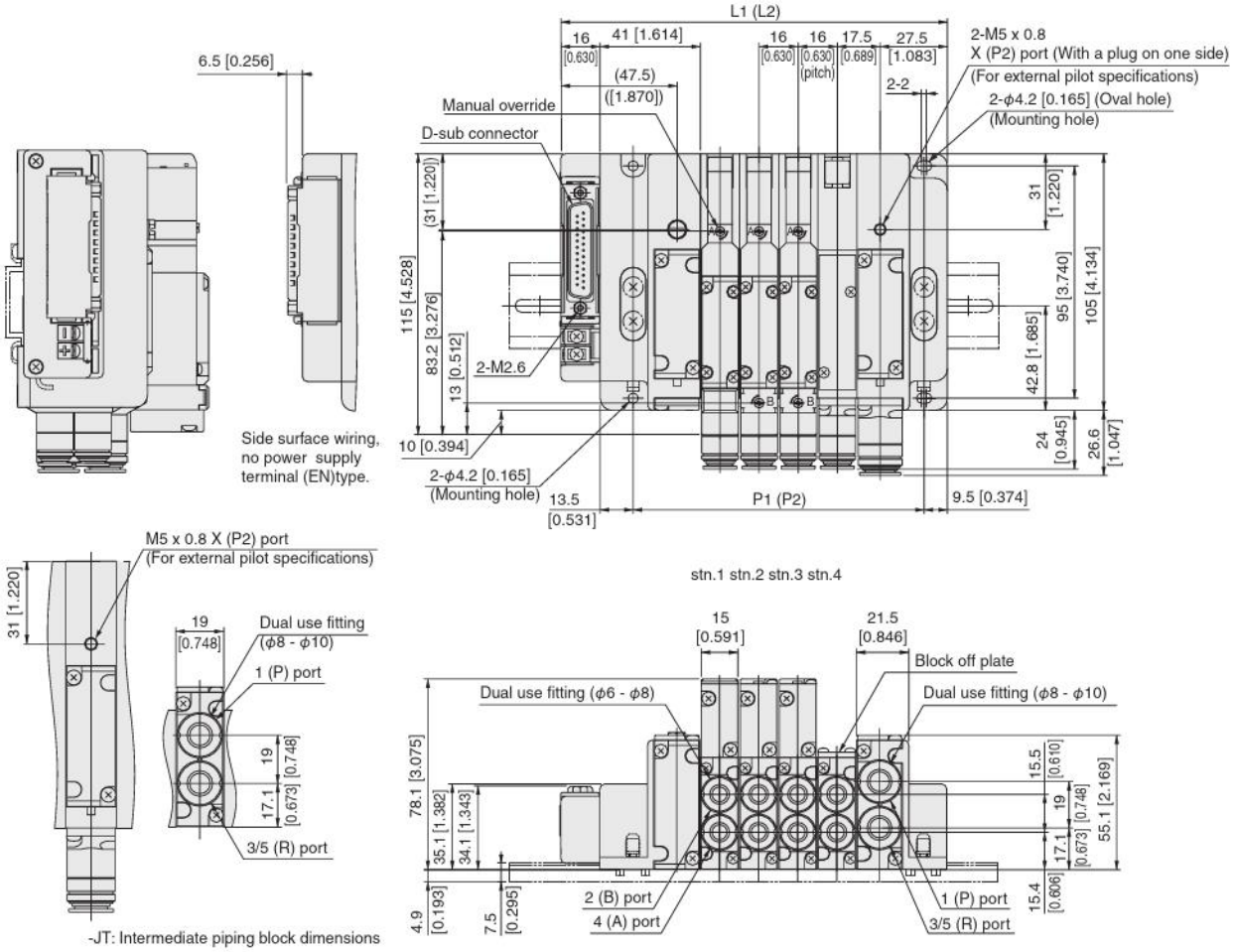

Unit dimensions

Number of units	L1	P1	Length of DIN rail	L2*	P2*	Length of DIN rail Note
2	126 [4.961]	87 [3.425]	175 [6.890]	-	-	-
3	142 [5.591]	103 [4.055]	200 [7.874]	161 [6.339]	122 [4.803]	200 [7.874]
4	158 [6.220]	119 [4.685]	200 [7.874]	177 [6.969]	138 [5.433]	225 [8.858]
5	174 [6.850]	135 [5.315]	225 [8.858]	193 [7.598]	154 [6.063]	225 [8.858]
6	190 [7.480]	151 [5.945]	250 [9.843]	209 [8.228]	170 [6.693]	250 [9.843]
7	206 [8.110]	167 [6.575]	250 [9.843]	225 [8.858]	186 [7.323]	250 [9.843]
8	222 [8.740]	183 [7.205]	275 [10.827]	241 [9.488]	202 [7.953]	275 [10.827]
9	238 [9.370]	199 [7.835]	300 [11.811]	257 [10.118]	218 [8.583]	300 [11.811]
10	254 [10.000]	215 [8.465]	300 [11.811]	273 [10.748]	234 [9.213]	300 [11.811]
11	270 [10.630]	231 [9.094]	325 [12.795]	289 [11.378]	250 [9.843]	325 [12.795]
12	286 [11.260]	247 [9.724]	350 [13.780]	305 [12.008]	266 [10.472]	350 [13.780]
13	302 [11.890]	263 [10.354]	350 [13.780]	321 [12.638]	282 [11.102]	350 [13.780]
14	318 [12.520]	279 [10.984]	375 [14.764]	337 [13.268]	298 [11.732]	375 [14.764]
15	334 [13.150]	295 [11.614]	375 [14.764]	353 [13.898]	314 [12.362]	400 [15.748]
16	350 [13.780]	311 [12.244]	400 [15.748]	369 [14.528]	330 [12.992]	400 [15.748]
17	366 [14.409]	327 [12.874]	425 [16.732]	385 [15.157]	346 [13.622]	425 [16.732]
18	382 [15.039]	343 [13.504]	425 [16.732]	401 [15.787]	362 [14.252]	450 [17.717]
19	398 [15.669]	359 [14.134]	450 [17.717]	417 [16.417]	378 [14.882]	450 [17.717]
20	414 [16.299]	375 [14.764]	475 [18.701]	433 [17.047]	394 [15.512]	475 [18.701]
21	-	-	-	449 [17.677]	410 [16.142]	475 [18.701]

Note: When the J□T or MT piping block specifications is selected.

F15M [Number of units] XP J/M/L [Pilot specifications] (Base piping specifications)

With manifold outlet port dual use fitting blocks
Terminal block type

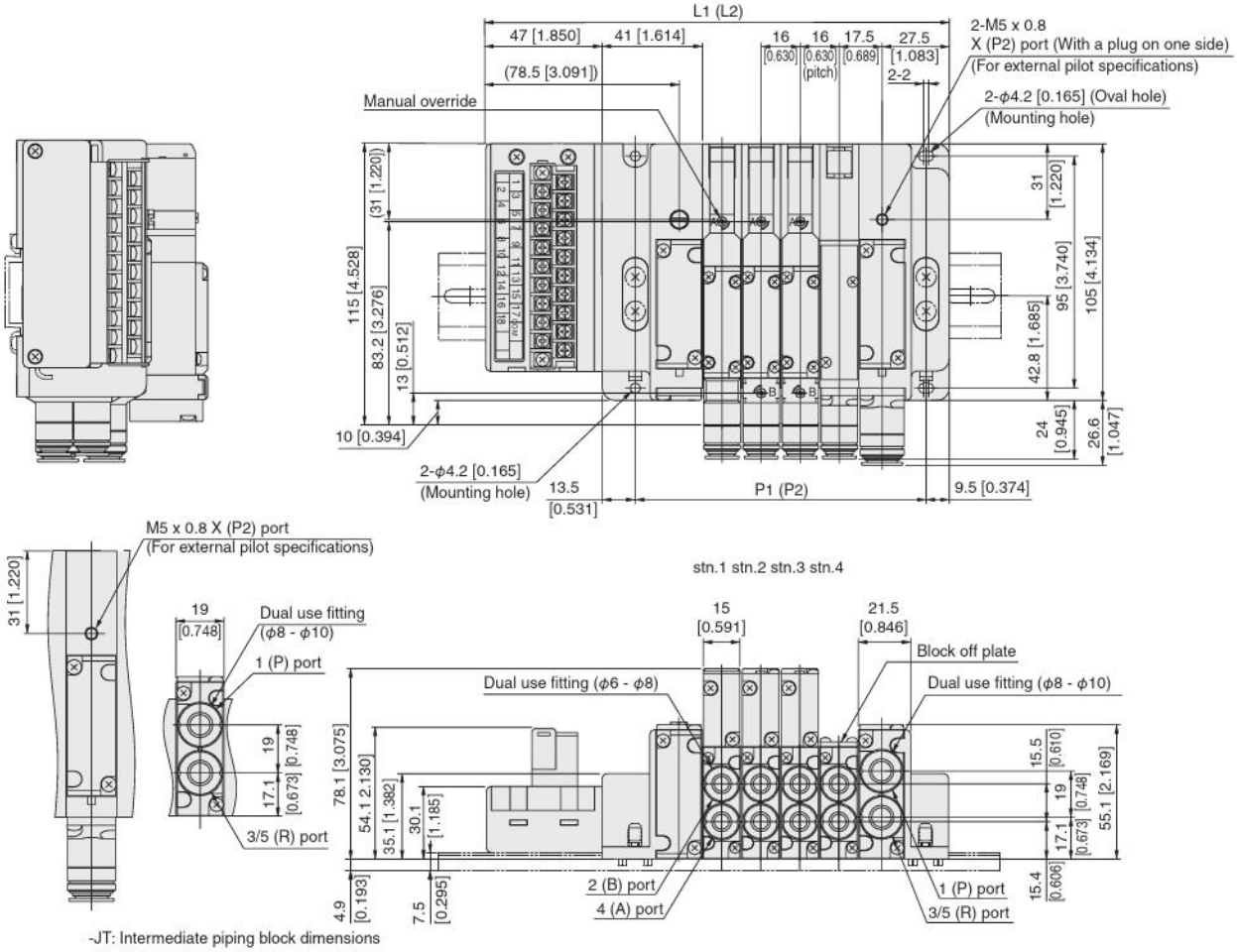

-JT: Intermediate piping block dimensions

Unit dimensions

Number of units	L1	P1	Length of DIN rail	L2*	P2*	Length of DIN rail Note
2	157 [6.181]	87 [3.425]	200 [7.874]	-	-	-
3	173 [6.811]	103 [4.055]	225 [8.858]	192 [7.559]	122 [4.803]	225 [8.858]
4	189 [7.441]	119 [4.685]	250 [9.843]	208 [8.189]	138 [5.433]	250 [9.843]
5	205 [8.071]	135 [5.315]	250 [9.843]	224 [8.819]	154 [6.063]	250 [9.843]
6	221 [8.701]	151 [5.945]	275 [10.827]	240 [9.449]	170 [6.693]	275 [10.827]
7	237 [9.331]	167 [6.575]	300 [11.811]	256 [10.079]	186 [7.323]	300 [11.811]
8	253 [9.961]	183 [7.205]	300 [11.811]	272 [10.709]	202 [7.953]	300 [11.811]
9	269 [10.591]	199 [7.835]	325 [12.795]	288 [11.339]	218 [8.583]	325 [12.795]
10	285 [11.220]	215 [8.465]	350 [13.780]	304 [11.969]	234 [9.213]	350 [13.780]
11	301 [11.850]	231 [9.094]	350 [13.780]	320 [12.598]	250 [9.843]	350 [13.780]
12	317 [12.480]	247 [9.724]	375 [14.764]	336 [13.228]	266 [10.472]	375 [14.764]
13	333 [13.110]	263 [10.354]	375 [14.764]	352 [13.858]	282 [11.102]	400 [15.748]
14	349 [13.740]	279 [10.984]	400 [15.748]	368 [14.488]	298 [11.732]	400 [15.748]
15	365 [14.370]	295 [11.614]	425 [16.732]	384 [15.118]	314 [12.362]	425 [16.732]
16	381 [15.000]	311 [12.244]	425 [16.732]	400 [15.748]	330 [12.992]	425 [16.732]
17	397 [15.630]	327 [12.874]	450 [17.717]	416 [16.378]	346 [13.622]	450 [17.717]
18	413 [16.260]	343 [13.504]	475 [18.701]	432 [17.008]	362 [14.252]	475 [18.701]
19	-	-	-	448 [17.638]	378 [14.882]	475 [18.701]

Note: When the J□T or MT piping block specifications is selected.

F15M [Number of units] XS J/M/L [Pilot specifications] (Base piping specifications)

With manifold outlet port dual use fitting block
(Stand alone serial transmission block compatible minifold) *The figure shows CC-Link.

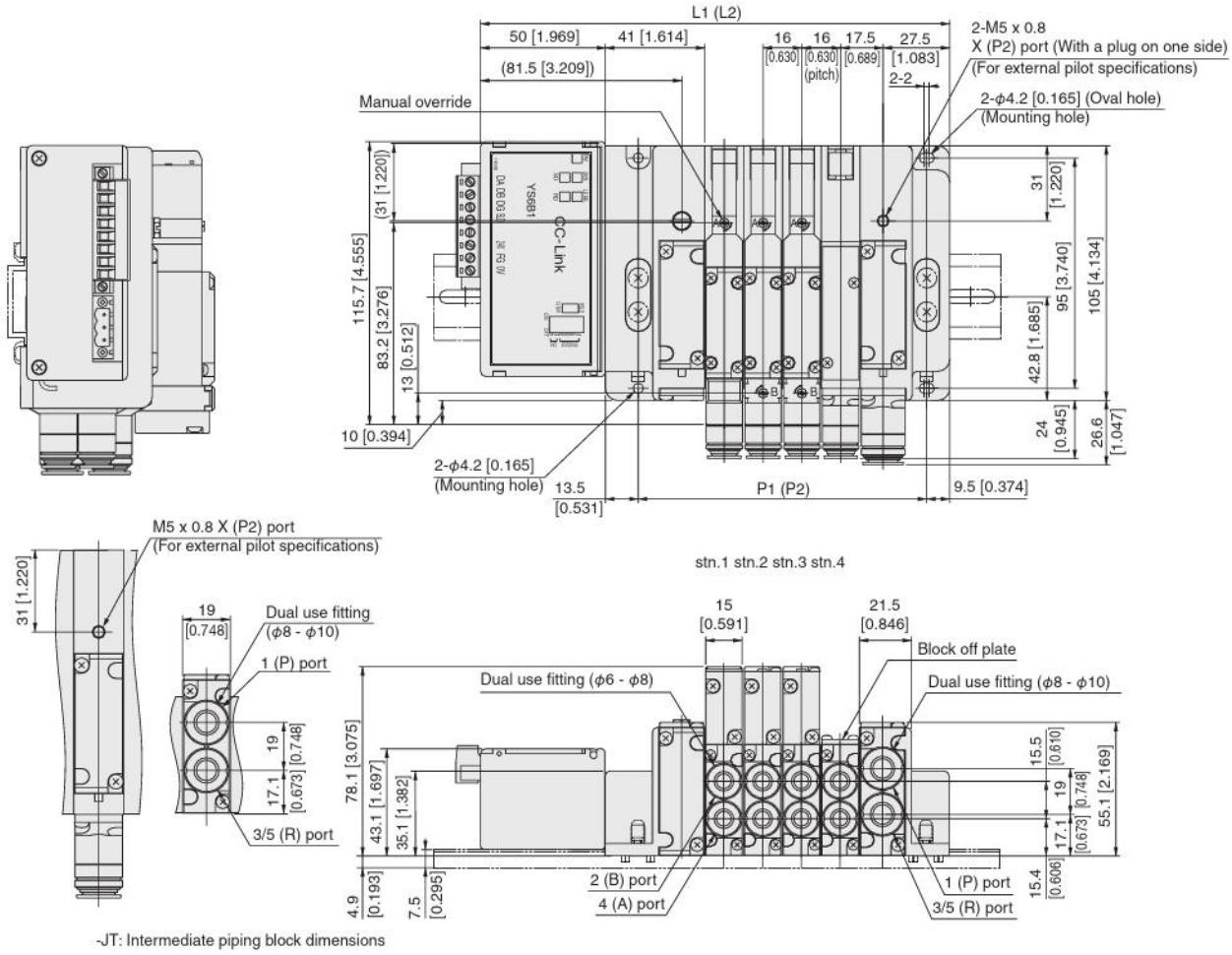

-JT: Intermediate piping block dimensions

Unit dimensions

Number of units	L1	P1	Length of DIN rail	L2*	P2*	Length of DIN rail Note
2	160 [6.299]	87 [3.425]	225 [8.858]	-	-	-
3	176 [6.929]	103 [4.055]	225 [8.858]	195 [7.677]	122 [4.803]	225 [8.858]
4	192 [7.559]	119 [4.685]	250 [9.843]	211 [8.307]	138 [5.433]	250 [9.843]
5	208 [8.189]	135 [5.315]	250 [9.843]	227 [8.937]	154 [6.063]	275 [10.827]
6	224 [8.819]	151 [5.945]	275 [10.827]	243 [9.567]	170 [6.693]	275 [10.827]
7	240 [9.449]	167 [6.575]	300 [11.811]	259 [10.197]	186 [7.323]	300 [11.811]
8	256 [10.079]	183 [7.205]	300 [11.811]	275 [10.827]	202 [7.953]	300 [11.811]
9	272 [10.709]	199 [7.835]	325 [12.795]	291 [11.457]	218 [8.583]	325 [12.795]
10	288 [11.339]	215 [8.465]	350 [13.780]	307 [12.087]	234 [9.213]	350 [13.780]
11	304 [11.969]	231 [9.094]	350 [13.780]	323 [12.717]	250 [9.843]	350 [13.780]
12	320 [12.598]	247 [9.724]	375 [14.764]	339 [13.346]	266 [10.472]	375 [14.764]
13	336 [13.228]	263 [10.354]	400 [15.748]	355 [13.976]	282 [11.102]	400 [15.748]
14	352 [13.858]	279 [10.984]	400 [15.748]	371 [14.606]	298 [11.732]	400 [15.748]
15	368 [14.488]	295 [11.614]	425 [16.732]	387 [15.236]	314 [12.362]	425 [16.732]
16	384 [15.118]	311 [12.244]	425 [16.732]	403 [15.866]	330 [12.992]	450 [17.717]
17	400 [15.748]	327 [12.874]	450 [17.717]	419 [16.496]	346 [13.622]	450 [17.717]
18	416 [16.378]	343 [13.504]	475 [18.701]	435 [17.126]	362 [14.252]	475 [18.701]
19	432 [17.008]	359 [14.134]	475 [18.701]	451 [17.756]	378 [14.882]	500 [19.685]
20	448 [17.638]	375 [14.764]	500 [19.685]	467 [18.386]	394 [15.512]	500 [19.685]
21	-	-	-	483 [19.016]	410 [16.142]	525 [20.669]

Note: When the J□T or MT piping block specifications is selected.

F15M [Number of units] XS J/M/L [Pilot specifications] (Base piping specifications)

With manifold outlet port dual use fitting block
<EtherCAT/EtherNet/IP>*The figure shows EtherCat.

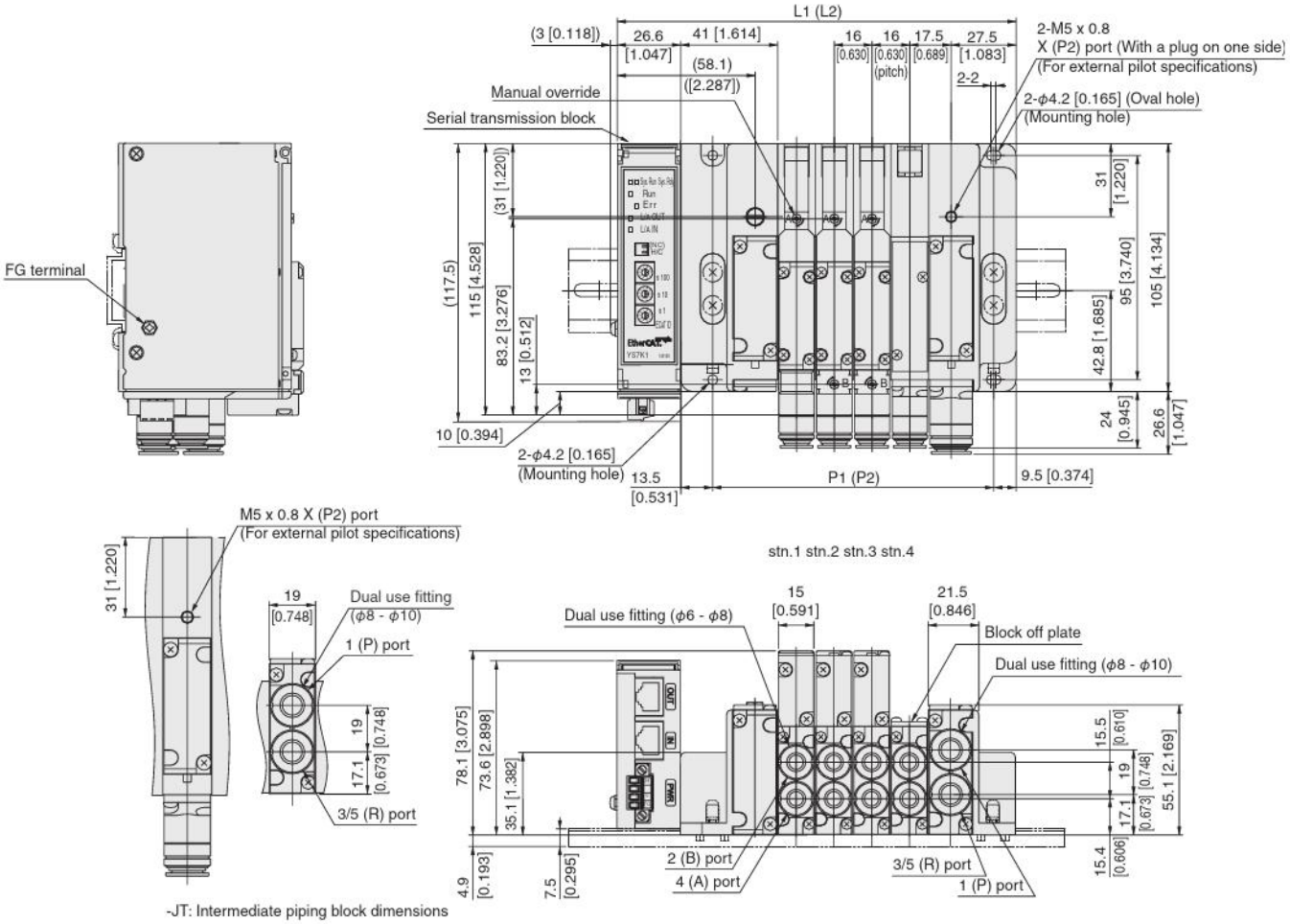

-JT: Intermediate piping block dimensions

Unit dimensions

Number of units	L1	P1	Length of DIN rail	L2*	P2*	Length of DIN rail Note
2	136.6 [5.378]	87 [3.425]	200 [7.874]	-	-	-
3	152.6 [6.008]	103 [4.055]	200 [7.874]	171.6 [6.756]	122 [4.803]	200 [7.874]
4	168.6 [6.638]	119 [4.685]	225 [8.858]	187.6 [7.386]	138 [5.433]	225 [8.858]
5	184.6 [7.268]	135 [5.315]	250 [9.843]	203.6 [8.016]	154 [6.063]	250 [9.843]
6	200.6 [7.898]	151 [5.945]	250 [9.843]	219.6 [8.646]	170 [6.693]	250 [9.843]
7	216.6 [8.528]	167 [6.575]	275 [10.827]	235.6 [9.276]	186 [7.323]	275 [10.827]
8	232.6 [9.157]	183 [7.205]	275 [10.827]	251.6 [9.906]	202 [7.953]	300 [11.811]
9	248.6 [9.787]	199 [7.835]	300 [11.811]	267.6 [10.535]	218 [8.583]	300 [11.811]
10	264.6 [10.417]	215 [8.465]	325 [12.795]	283.6 [11.165]	234 [9.213]	325 [12.795]
11	280.6 [11.047]	231 [9.094]	325 [12.795]	299.6 [11.795]	250 [9.843]	325 [12.795]
12	296.6 [11.677]	247 [9.724]	350 [13.780]	315.6 [12.425]	266 [10.472]	350 [13.780]
13	312.6 [12.307]	263 [10.354]	375 [14.764]	331.6 [13.055]	282 [11.102]	375 [14.764]
14	328.6 [12.937]	279 [10.984]	375 [14.764]	347.6 [13.685]	298 [11.732]	375 [14.764]
15	344.6 [13.567]	295 [11.614]	400 [15.748]	363.6 [14.315]	314 [12.362]	400 [15.748]
16	360.6 [14.197]	311 [12.244]	425 [16.732]	379.6 [14.945]	330 [12.992]	425 [16.732]
17	376.6 [14.827]	327 [12.874]	425 [16.732]	395.6 [15.575]	346 [13.622]	425 [16.732]
18	392.6 [15.457]	343 [13.504]	450 [17.717]	411.6 [16.205]	362 [14.252]	450 [17.717]
19	408.6 [16.087]	359 [14.134]	450 [17.717]	427.6 [16.835]	378 [14.882]	475 [18.701]
20	424.6 [16.717]	375 [14.764]	475 [18.701]	443.6 [17.465]	394 [15.512]	475 [18.701]
21	-	-	-	459.6 [18.094]	410 [16.142]	500 [19.685]

Note: When the J□T or MT piping block specifications is selected.

Additional parts (available separately)

●Muffler: **KM-J10** [for both plug-in and non-plug-in]

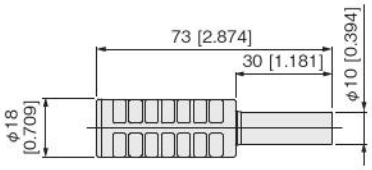

●Muffler: **KM-J8**

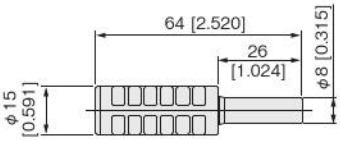

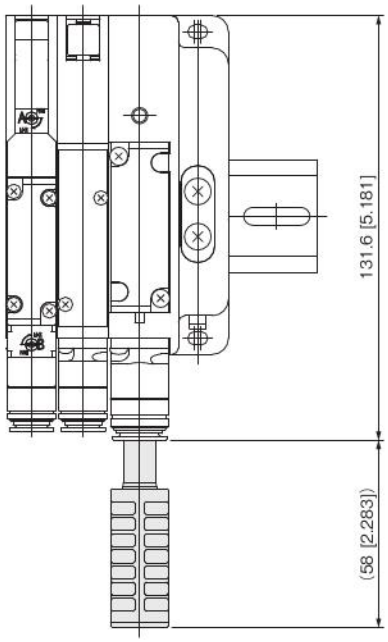

SOLENOID VALVES
F18 SERIES

Contents

Specifications ——— 254

ORDER CODES
- Single Valve Unit ——— 259
- Monoblock Manifold A Type (Base Piping Type) ——— 261
- Monoblock Manifold F Type (Direct Piping Type) ——— 263
- Split Manifold Non-plug-in Type ——— 266
- Split Manifold Plug-in Type ——— 270
- Split Manifold Serial Transmission Type ——— 274

DIMENSIONS
- Single Valve Unit ——— 278
- Monoblock Manifold A Type ——— 281
- Monoblock Manifold F Type ——— 282
- Split Manifold Non-plug-in Type ——— 283
- Split Manifold Plug-in Type ——— 284
- Split Manifold Serial Transmission Type ——— 287

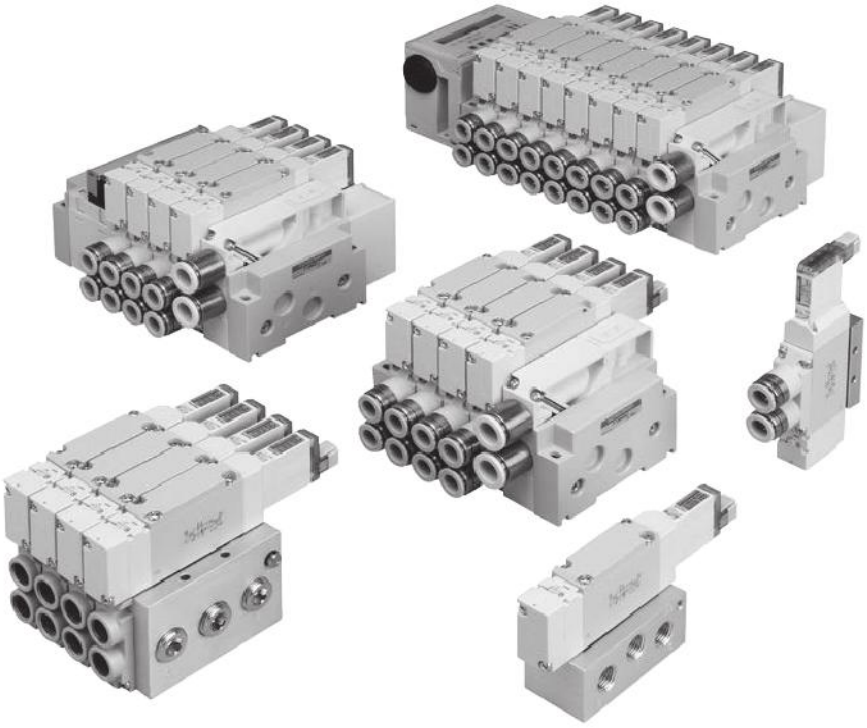

F18 SERIES Specifications

Specifications

Basic Models and Valve Functions

Item \ Basic model	F18□T0	F18□T1 F18□T2	F18□T3 F18□T4 F18□T5	F18□TA F18□TB F18□TC
Number of positions	2 positions		3 positions	4 positions
Number of ports	5			Tandem 3-port
Valve function	Single solenoid only	Both single and double solenoid use	Closed center, Exhaust center, Pressure center	NC/NC, NO/NO, NC/NO

Remark: For the optional specifications and order codes, see p.259.

Specifications

Item \ Basic model		F18□T0 F18□T1 F18□T2	F18□T3 F18□T4 F18□T5	F18□TA F18□TB F18□TC	F18□T0G F18□T1G F18□T2G	F18□T3G F18□T4G F18□T5G	F18□T0V F18□T1V F18□T2V	F18□T3V
Media		Air						
Operation type		Internal pilot type			External pilot type (for positive pressure)		External pilot type (for vacuum)	
Flow rate characteristics	Sonic conductance C $dm^3/(s \cdot bar)$ Note1	3.48	3.40	2.54	3.48	3.40	3.48	3.40
	Effective area Note2 mm^2 (Cv)	17.4 (0.97)	17 (0.94)	12.7 (0.71)	17.4 (0.97)	17 (0.94)	17.4 (0.97)	17 (0.94)
Port size Note3		Dual use fitting for ϕ8 and ϕ10, Rc1/4			M5×0.8,10-32UNF, dual use fitting for ϕ8 and ϕ10, Rc1/4			
Lubrication		Not required						
Operating pressure range	Main valve	0.15~0.7 MPa [22~102 psi.]			0~0.7 MPa [0~102 psi.] Note4		– 100 kPa~0.15 MPa [– 29.53 in.Hg~22 psi.]	
	External pilot	——			0.2~0.7 MPa [29~102 psi.] Note4		0.2~0.7 MPa [29~102 psi.]	
Proof pressure	MPa [psi.]	1.05 [152]						
Response time Note5 ON/OFF ms	12VDC, 24VDC	30/35 (40) or below	20/70 (75) or below	30/55 (60) or below	30/35 (40) or below	20/70 (75) or below	30/35 (40) or below	20/70 (75) or below
	100VAC	30/35 or below	20/70 or below	——	30/35 or below	20/70 or below	30/35 or below	20/70 or below
Maximum operating frequency	Hz	5						
Minimum time to energize for self holding Note6	ms	50	——		50	——	50	——
Operating temperature range (atmosphere and media)	°C [°F]	5~50 [41~122]						
Shock resistance	m/s^2 [G]	294.2 [30]						
Mounting direction		Any						

Notes: 1. For details, see the flow rate characteristics on p.255.
2. The effective area is a calculated value, and not a measured value.
3. For details, see the port size on p.255.
4. When the main valve pressure is 0.2~0.7 MPa [29~102 psi.], set the external pilot pressure to the main valve pressure or higher, and to 0.7 MPa [102 psi.] or less.
5. Values when air pressure is 0.5 MPa [73 psi.]. For switching phase timing in the AC specification, add a maximum of 5 ms to the response time. The values for 2-position valves are those when used as a single solenoid, and the values for 3-position valves are those when switching from the neutral position of closed center. Values in parentheses ( ) are for low-current type.
6. When used as a double solenoid valve. Excludes **T0**.

Remark: Specification values are based on Koganei test standards.

Solenoid Specifications

Item \ Rated voltage			12VDC	24VDC (Standard type)	24VDC (Low-current type)	100VAC		120VAC	
Voltage range		V	10.8~13.2 (12±10%)	21.6~26.4 (24±10%)	21.6~26.4 (24±10%)	90~110 (100±10%)		108~132 (120±10%)	
Rated frequency		Hz	—	—	—	50	60	50	60
Standard	Current (when rated voltage is applied)	mA (r.m.s)	33	17	—	8		8.3	
Standard	Power consumption	W	0.4	0.4	—	0.8 VA		1 VA	
Low-current type	Current (when rated voltage is applied)	Starting mA	—	—	17	—		—	
Low-current type		Holding mA			4.2				
Low-current type	Power consumption	Starting W	—	—	0.4	—		—	
Low-current type		Holding W			0.1				
Low-current type	Starting time (standard)	ms	—	—	70	—		—	
Allowable leakage current		mA	2.0	1.0	1.0	1.0		1.0	
Type of insulation			Type B						
Insulation resistance Note 1		MΩ	Over 100						
Color of LED indicator Note2			14(SA) : Red, 12(SB) : Green						
Surge suppression (as standard)			Surge absorption transistor		Flywheel diode	Bridge diode			

Notes: 1. Value at 500VDC megger.
2. The color of the **T0** indicator is red only.

Remark: Specification values are based on Koganei test standards.

Cylinder Operating Speed

How to obtain cylinder speed

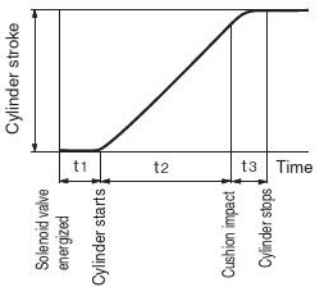

Measuring conditions

- Air pressure: 0.5 MPa [73 psi.]
- Piping (outer diameter x inner diameter x length) : ϕ10 x ϕ7.5 x 1000 mm [61 in.]
- Fitting: Quick fitting TS10-02
- Load ratio = $\frac{\text{Load}}{\text{Cylinder theoretical thrust}}$ (%)
- Cylinder stroke: 150 mm [5.91 in.]

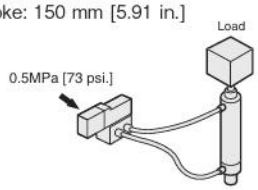

Maximum operating speed

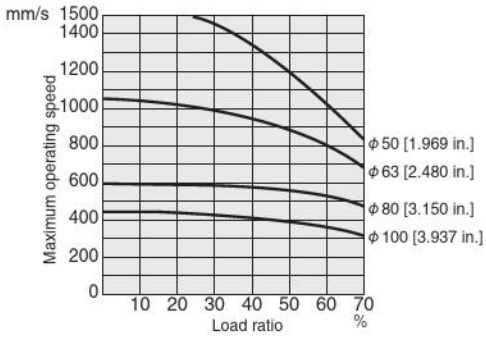

Delay time

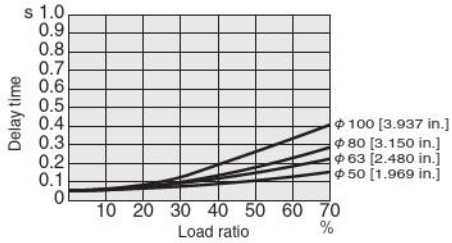

Note: Delay time may vary according to the cylinder stroke.

Flow Rate

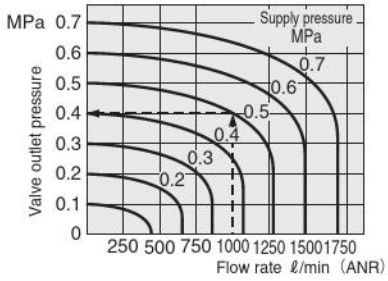

How to read the graph

When the supply pressure is 0.5 MPa [73 psi.] and flow rate is 1000 ℓ/min [35.3 ft.³/min.] (ANR), the valve outlet pressure becomes 0.4 MPa [58 psi.].

1 mm/s = 0.0394 in./sec.
1 MPa = 145 psi.
1 ℓ/min = 0.0353ft.³/min.

Port Size

Description/Piping specification		PR	X (P2)	4 (A), 2 (B)	1 (P), 3 (R2), 5 (R1), 3, 5 (R)
With sub-base		M5×0.8, 10-32UNF	M5×0.8, 10-32UNF	Rc1/4, NPT1/4	Rc1/4, NPT1/4
Single unit	With female thread block	–	–	Rc1/4, NPT1/4	Rc1/4, NPT1/4
	With dual use fitting block	–	–	Dual use fitting for ϕ8 and ϕ10	Rc1/4, NPT1/4
	With single use fitting block	–	–	ϕ8 or ϕ10	Rc1/4, NPT1/4
Manifold	Monoblock type with female thread block, and PC board type with female thread block	M5×0.8, 10-32UNF	M5×0.8, 10-32UNF	Rc1/4, NPT1/4	Rc3/8, NPT3/8
	Monoblock type with fitting block, and PC board type with fitting block	M5×0.8, 10-32UNF	M5×0.8, 10-32UNF	Dual use fitting for ϕ8 and ϕ10	Rc3/8, NPT3/8
	Monoblock type with single use fitting block, and PC board type with single use fitting block	M5×0.8, 10-32UNF	M5×0.8, 10-32UNF	ϕ8 or ϕ10	Rc3/8, NPT3/8
	Split type with female thread block, and serial transmission type with female thread block	–	M5×0.8, 10-32UNF	Rc1/4, NPT1/4	Rc3/8, NPT3/8 Single use fitting for ϕ12
	Split type with fitting block, and serial transmission type with fitting block	–	M5×0.8, 10-32UNF	Dual use fitting for ϕ8 and ϕ10	
	Split type with single use fitting block, and serial transmission type with single use fitting block	–	M5×0.8, 10-32UNF	ϕ8 or ϕ10	

Specifications for DIN Connector (-39□) Type

Specifications

Remark: Specification values are the same as the Standard type, excluding the response time. See page 254.

Item \ Basic model	F18T0 F18T2	F18T3 F18T4 F18T5	F18T0G F18T2G	F18T3G F18T4G F18T5G	F18T0V F18T2V	F18T3V
Response time Note ON/OFF ms	20/30 or below	15/50 or below	20/30 or below	15/50 or below	20/30 or below	15/50 or below

Note: Values when air pressure is 0.5 MPa [73 psi.]. For switching phase timing in the AC specification, add a maximum of 5 ms to the response time. The values for 2-position valves are those when used as a single solenoid, and the values for 3-position valves are those when switching from the neutral position of closed center.

Solenoid Specifications for DIN Connector (-39□) Type

Item \ Rated voltage		12VDC	24VDC	120VAC		240VAC	
Voltage range V		10.8~13.2 (12±10%)	21.6~26.4 (24±10%)	90~132		180~264	
Current	Frequency Hz	—	—	50	60	50	60
	Starting mA (r.m.s)	—	—	43	38	22	19
	Holding mA (r.m.s)	140 (1.7W)	75 (1.8W)	29	24	14	12
Allowable leakage current mA		8	4	4		2	
Insulation resistance Note MΩ		Over 100					
Surge suppression (as standard)		Surge absorption transistor		Varistor		Varistor	

Note: Value at 500VDC megger.

Remark: Specification values are based on Koganei test standards.

Flow Rate Characteristics

● When used as a single unit

Basic model	1(P)→2(B)/1(P)→4(A)		2(B)→3(R2)/4(A)→5(R1)	
	Sonic conductance C dm³/(s·bar)	Critical pressure ratio b	Sonic conductance C dm³/(s·bar)	Critical pressure ratio b
F18□T0-A2 F18□T1-A2 F18□T2-A2	3.48	0.11	3.42	0.23
F18□T3-A2 F18□T4-A2 F18□T5-A2	3.40	0.25	3.00	0.27
F18□TA-A2 F18□TB-A2 F18□TC-A2	2.53	0.33	2.54	0.34
F18□T0-F3 F18□T1-F3 F18□T2-F3	3.22	0.34	2.52	0.31
F18□T3-F3 F18□T4-F3 F18□T5-F3	3.04	0.35	2.93	0.26
F18□TA-F3 F18□TB-F3 F18□TC-F3	2.40	0.33	2.58	0.22
F18□T0-F4 F18□T1-F4 F18□T2-F4	3.39	0.36	3.27	0.30
F18□T3-F4 F18□T4-F4 F18□T5-F4	3.39	0.30	3.10	0.27
F18□TA-F4 F18□TB-F4 F18□TC-F4	2.52	0.34	2.70	0.31

Basic model	1(P)→2(B)/1(P)→4(A)		2(B)→3(R2)/4(A)→5(R1)	
	Sonic conductance C dm³/(s·bar)	Critical pressure ratio b	Sonic conductance C dm³/(s·bar)	Critical pressure ratio b
F18□T0-F5 F18□T1-F5 F18□T2-F5	3.14	0.41	3.00	0.33
F18□T3-F5 F18□T4-F5 F18□T5-F5	3.17	0.32	3.03	0.24
F18□TA-F5 F18□TB-F5 F18□TC-F5	2.38	0.35	2.61	0.28
F18□T0-F6 F18□T1-F6 F18□T2-F6	3.31	0.34	3.10	0.28
F18□T3-F6 F18□T4-F6 F18□T5-F6	3.21	0.35	3.01	0.25
F18□TA-F6 F18□TB-F6 F18□TC-F6	2.48	0.33	2.62	0.28

● When mounted on a manifold

Valve type \ Manifold type		Monoblock manifold F type F18M□F (FP)		Monoblock manifold A type F18M□A (AP)		Split manifold F18M□N (P) (S)	
		1(P)→2(B)/1(P)→4(A)	2(B)→3(R2)/4(A)→5(R1)	1(P)→2(B)/1(P)→4(A)	2(B)→3(R2)/4(A)→5(R1)	1(P)→2(B)/1(P)→4(A)	2(B)→3(R2)/4(A)→5(R1)
		Sonic conductance C	dm³/(s/bar)	Sonic conductance C	dm³/(s/bar)	Sonic conductance C	dm³/(s/bar)
F18□T0□ F18□T1□ F18□T2□	Outlet port dual use fitting for ϕ8 and ϕ10 ※These are the cases of ϕ10.	3.31	3.05	3.03	2.94	3.05	2.99
F18□T3□ F18□T4□ F18□T5□		3.20	2.98	2.92	2.77	2.94	2.69
F18□TA□ F18□TB□ F18□TC□		2.45	2.58	2.41	2.51	2.40	2.32
F18□T0□ F18□T1□ F18□T2□	Outlet port ϕ8 fitting	3.03	3.02	2.83	2.85	2.86	3.02
F18□T3□ F18□T4□ F18□T5□		2.99	2.96	2.68	2.75	2.80	2.82
F18□TA□ F18□TB□ F18□TC□		2.39	2.56	2.25	2.40	2.38	2.35
F18□T0□ F18□T1□ F18□T2□	Outlet port ϕ10 fitting	3.15	3.12	2.94	2.96	2.90	3.13
F18□T3□ F18□T4□ F18□T5□		3.14	3.00	2.79	2.85	2.85	2.91
F18□TA□ F18□TB□ F18□TC□		2.43	2.59	2.29	2.49	2.41	2.39

Notes: 1. When the individual air supply spacer or the individual air exhaust spacer, the back pressure prevention valve, or the stop valve is used, sonic conductance decreases by about 30%.
2: For the flow rate characteristics of other outlet ports, consult us.

Remark: Specification values are based on Koganei test standards.

Mass

Single Valve Unit Mass

g [oz.]

F18T□□	F18T□□-A1	F18T□□-A2	F18T□□-FJ	F18T□□-FJ5	F18T□□-FJ6
Outlet portion None	Outlet portion With plate	Outlet portion With plate	Outlet portion With dual use fitting block	Outlet portion With ϕ8 fitting block	Outlet portion With ϕ10 fitting block
Inlet portion None	Inlet portion None	Inlet portion With A type sub-base	Inlet portion None	Inlet portion None	Inlet portion None
113 [3.99]	139 [4.90]	303 [10.69]	154 [5.43]	179 [6.31]	188 [6.63]

g [oz.]

F18T□□-FM	F18T□□-F3	F18T□□-F4	F18T□□-F5	F18T□□-F6
Outlet portion With female thread block	Outlet portion With dual use fitting block	Outlet portion With female thread block	Outlet portion With ϕ8 fitting block	Outlet portion With ϕ10 fitting block
Inlet portion None	Inlet portion With female thread block	Inlet portion With female thread block	Inlet portion With female thread block	Inlet portion With female thread block
142 [5.01]	179 [6.31]	167 [5.89]	204 [7.20]	213 [7.51]

Basic Type **F18T0** is 17 g [0.60 oz.] less than the mass shown above.

Monoblock Manifold Mass (single valve unit included)

g [oz.]

Monoblock manifold	Mass calculation of each unit			
	4(A), 2(B) ports outlet specifications			
	Female thread block	Dual use fitting block	ϕ8 fitting block	ϕ10 fitting block
A type	(329×n) + 165 [(11.61×n) + 5.82]	(339×n) + 165 [(11.96×n) + 5.82]	(364×n) + 165 [(12.84×n) + 5.82]	(373×n) + 165 [(13.16×n) + 5.82]
F type	(217×n) + 70 [(7.65×n) + 2.47]	(227×n) + 70 [(8.01×n) + 2.47]	(252×n) + 70 [(8.89×n) + 2.47]	(261×n) + 70 [(9.21×n) + 2.47]

Calculation example : **F18M8AM**

stn.1～stn.8 F18T1-A1-PS DC24V

(329×8) + 165 = 2797 g [98.66 oz.]

When mounting a block-off plate, subtract 105 g [3.70 oz.] per unit from the above calculation result for the female thread specification; subtract 115 g [4.06 oz.] for the dual use fitting specification; subtract 140 g [4.94 oz.] for the ϕ8 fitting specification; and subtract 149 g [5.26 oz.] for the ϕ10 fitting specification.

When mounting the **F18T0** specification valve, subtract 17 g [0.60 oz.] per unit from the above calculation result.

Mass of Split Manifold and Serial Transmission Compatible Manifold

Because the valve and manifold have the same output specifications, their mass is the same. The mass can only be changed by choosing a different type of inlet/outlet block.

Mass of Split Manifold Non-Plug-in Type (single valve unit included)

g [oz.]

Non-plug-in type	Mass calculation of each unit			
	4(A), 2(B) ports outlet specifications			
	Female thread block	Dual use fitting block	ϕ8 fitting block	ϕ10 fitting block
	(236×n) + 234 [(8.33×n) + 8.25]	(246×n) + 234 [(8.68×n) + 8.25]	(271×n) + 234 [(9.56×n) + 8.25]	(280×n) + 234 [(9.88×n) + 8.25]

g [oz.]

Additional mass	
Piping block specification	
Female thread block	Fitting block
164 [5.78]	189 [6.67]

Calculation example : **F18M8N-MR**

stn.1～stn.8 F18T1-A1-PS DC24V

(236×8) + 234 + 164 = 2286 g [80.64 oz.]

When mounting a block-off plate, subtract 105 g [3.70 oz.] per unit from the above calculation result for the female thread specification; subtract 115 g [4.06 oz.] for the dual use fitting specification; subtract 140 g [4.94 oz.] for the ϕ8 fitting specification; and subtract 149 g [5.26 oz.] for the ϕ10 fitting specification.

When mounting the **F18T0** specification valve, subtract 17 g [0.60 oz.] per unit from the above calculation result.

Mass of Split Manifold Plug-in Type/ Serial Transmission Compatible Manifold (single valve unit included)

g [oz.]

Plug-in type Serial transmission compatible manifold	Mass calculation of each unit			
	4(A), 2(B) ports outlet specifications			
	Female thread block	Dual use fitting block	ϕ8 fitting block	ϕ10 fitting block
	(238×n) + 238 [(8.40×n) + 8.40]	(248×n) + 238 [(8.75×n) + 8.40]	(273×n) + 238 [(9.63×n) + 8.40]	(282×n) + 238 [(9.95×n) + 8.40]

g [oz.]

Additional mass	
Piping block specification	
Female thread block	Fitting block
174 [6.14]	199 [7.02]

g [oz.]

Additional mass			
Wiring block specification			
-F100, -F101	**-F200, -F201, -F260**	**-D250, -D251**	**-T200**
69 [2.43]	71 [2.50]	72 [2.54]	154 [5.43]

Additional mass				
Serial transmission block specification				
Integrated type (for B7A or CompoBus/S, CC-Link)	Stand-alone type (for CompoNet)	Integrated type (for DeviceNet)	Integrated type (for EtherCAT)	Integrated type (for EtherNet/IP)
160 [5.64]	236 [8.33]	243 [8.57]	205 [7.23]	215 [7.58]

Calculation example : **F18M8PM-MR-F201 DC24V**
stn.1～stn.8 F18T1-A1 DC24V
(238×8)+238+174+71=2387 g [84.20 oz.]
When mounting the block-off plate, subtract 125 g [4.41 oz] per unit from the above calculation result.
When mounting the **F18□T0** specification valve, subtract 17 g [0.60 oz.] per unit from the above calculation result.

F18 Series Single Valve Unit Order Codes

Valve size

F18

18 mm [0.709 in.] width
Standard type

F18L

18 mm [0.709 in.] width
Low-current type

Manual override

Manual override button

No protrusion with DIN connector

Manual override lever[Note1]

Protruding locking type[Note9]

Valve specification

T0 : 2-position, for single solenoid only
T1 : 2-position single solenoid specification (for both single and double solenoid use)
T2 : 2-position double solenoid specification (for both single and double solenoid use)
T3 : 3-position closed center
T4 : 3-position exhaust center[Note4]
T5 : 3-position pressure center[Note4]
TA : Tandem 3-port (NC and NC)[Note4]
TB : Tandem 3-port (NO and NO)[Note4]
TC : Tandem 3-port (NC and NO)[Note4]

Operation type

Blank

Internal pilot type

G

External pilot type[Note]
(for positive pressure)

V

External pilot type[Note]
(for vacuum)※
※ This is a vacuum valve.

Note: When using as a single unit, select **-A2** (A type with sub-base) for the valve outlet type. Without a sub-base, piping for the external pilot is not possible.

Valve outlet type

Without inlet/outlet block

With A type outlet plate

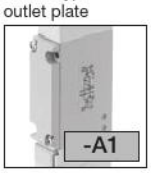

With A type sub-base

Inlet/outlet port Rc1/4

With A type sub-base

Inlet/outlet port NPT1/4

With outlet port dual use fitting block

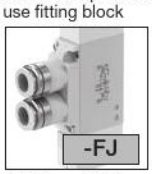

Outlet port fitting ϕ 8, ϕ 10

With outlet port single use fitting block

Outlet port fitting ϕ 8

With outlet port single use fitting block

Outlet port fitting ϕ 10

With outlet port female thread block

Outlet port Rc1/4

With outlet port female thread block

Outlet port NPT1/4

With outlet port dual use fitting block
With inlet port female thread block

Inlet port Rc1/4
Outlet port fitting ϕ 8, ϕ 10

With outlet port female thread block
With inlet port female thread block

Inlet port Rc1/4
Outlet port Rc1/4

With outlet port female thread block
With inlet port female thread block

Inlet port NPT1/4
Outlet port NPT1/4

With outlet port single use fitting block
With inlet port female thread block

Inlet port Rc1/4
Outlet port fitting ϕ 8

With outlet port single use fitting block
With inlet port female thread block

Inlet port Rc1/4
Outlet port fitting ϕ 10

Wiring specification

L type plug connector
Without connector

S type plug connector
Without connector

S type plug connector
Lead wire 300 mm※

L type plug connector
Lead wire 300 mm※

S type plug connector
Lead wire 3000 mm※

L type plug connector
Lead wire 3000 mm※

DIN connector type with indicator[Note10]

DIN connector type without connector[Note10]

-39N

※ 300 mm = 11.8 in.
3000 mm = 118 in.

Valve size	Valve specification	Operation type	IP Specifications	Manual override	Valve outlet type	Wiring specification	Voltage
F18	T0 T1 T2 T3 T4[Note4] T5[Note4] TA[Note5] TB[Note5] TC[Note5]	Blank G V	Blank -P[Note6]	Blank -R[Note1] -83[Note9]	Blank[Note2] -A1[Note2] -A2 -A2H -FJ[Note2, 4] -FJ5[Note2, 4] -FJ6[Note2, 4] -FM[Note2, 4] -FMH[Note2, 4] -F3[Note3] -F4[Note3] -F4H[Note3] -F5[Note3] -F6[Note3]	Blank -PN -PS -PL -PS3 -PL3 -39L[Note10] -39N[Note10]	DC24V DC12V[Note7] AC100V[Note8, 11] AC120V AC240V[Note9]

Notes: 1. When the valve specification is **T1** or **T2**, the manual override lever is placed only on the A side. This is not available with **-39** □.
2. Two manifold mounting screws are included.
3. "With inlet port female thread block" is compatible with the internal pilot type valve only.
4. Not available in the vacuum valves.
5. Not available in external pilot type and vacuum valves.
6. The IP65 protective structure around an electrical device that prevents the infiltration of solid foreign material and water from outside.
7. Not available in low-current type.
8. Not available in low-current type and tandem 3-port valves.
9. Only for wiring specification **-39** □.
10. Not available for valve specification **T1**. In addition, the valve is used only as a double solenoid for **T2**.
11. Not available with DIN connectors.

Remark: Negative common specifications are also available as made to order products (add **-129W** to the end of order code). For details, consult us.

● For internal pilot

F18 Z - □

Valve size
18: 18 mm
[0.709 in.] width

Parts content
21 : Mounting bracket (mounting bracket, 2 mounting screws)
25 : Sub-base Rc1/4 (sub-base body, gasket, exhaust valve)Note1
25H : Sub-base NPT1/4 (sub-base body, gasket, exhaust valve)Note1
P : Plate (plate, gasket, 2 mounting screws)
J : Dual use fitting block (fitting block, gasket, 2 mounting screws)
J5 : Single use fitting block ϕ 8 (fitting block, gasket, 2 mounting screws)
J6 : Single use fitting block ϕ 10 (fitting block, gasket, 2 mounting screws)
M : Female thread block Rc1/4 (female thread block, gasket, 2 mounting screws)
MH : Female thread block NPT1/4 (female thread block, gasket, 2 mounting screws)
MP : P port female thread block Rc1/4 (P port female thread block, gasket)Note1
MPH: P port female thread block NPT1/4 (P port female thread block, gasket)Note1
MPP: IP dedicated P port female thread block (P port female thread block, gasket)
GS1 : Gasket (gasket, exhaust valve)Note2

Notes: 1. Valve mounting screws are not included.
2. Caution should be exercised as this gasket is different from the **GS2** gasket for the split-type manifolds.

● For external pilot

F18 Z - □

Valve size
18: 18 mm
[0.709 in.] width

Parts content
P : Plate (plate, gasket, 2 mounting screws)
J : Dual use fitting block (fitting block, gasket, 2 mounting screws)
J5 : Single use fitting block ϕ 8 (fitting block, gasket, 2 mounting screws)
J6 : Single use fitting block ϕ 10 (fitting block, gasket, 2 mounting screws)
M : Female thread block Rc1/4 (female thread block, gasket, 2 mounting screws)
MH : Female thread block NPT1/4 (female thread block, gasket, 2 mounting screws)
GS1 : Gasket (gasket, exhaust valve)Note

Note: Caution should be exercised as this gasket is different from the **GS2** gasket for the split type manifolds.

Sub-base for external pilot

F18 ZG - 25 (Sub-base Rc1/4)
F18 ZG - 25H (Sub-base NPT1/4)

Connector-related order codes

JAZ - □ - □

UL compatible type Note1
Blank: -
UR : UL certified product

Valve specification
For **T1, T2, T3, T4, T5, TA, TB, TC**

Connector specification
CP : Connector, lead wire length 300 mm [11.8 in.] (black, red, white, for total of 3 lead wires)
CP3 : Connector, lead wire length 3000 mm [118 in.] (black, red, white, for total of 3 lead wires)
CPN: Connector without lead wire (1 short bar and 3 contacts included)

Remarks: A connector for negative common is also available. See p. 19 for details. (UR is unsupported)
Notes: 1. The lead wire thickness is 24AWG when Blank or 22AWG when UR is specified.

JAZ0 - □ - □

UL compatible type Note1
Blank: -
UR : UL certified product

Valve specification
For **T0**

Connector specification
CP : Connector, lead wire length 300 mm [11.8 in.] (black, red, for total of 2 lead wires)
CP3 : Connector, lead wire length 3000 mm [118 in.] (black, red, for total of 2 lead wires)
CPN: Connector without lead wire (1 short bar, 2 contacts included)

FZ - □

Valve specification
For **T1, T2, T3, T4, T5, TA, TB, TC**

Connector specification
CC1.5: Cabtyre cable length 1500 mm [59 in.] ※
CC3 : Cabtyre cable length 3000 mm [118 in.] ※

※ For details, see p. 22.

Connector-related order codes

JAZ - P - □ (for double use only)

Valve specification
For **T2, T3, T4, T5, TA, TB,** or **TC**

IP specification

Connector specification
CP : Connector, lead wire length 300 mm [11.8 in.] (black, red, white, for total of 3 lead wires)
CP3: Connector, lead wire length 3000 mm [118 in.] (black, red, white, for total of 3 lead wires)
PA : Positive common A type, lead wire length 300 mm [11.8 in.]※
PA3: Positive common A type, lead wire length 3000 mm [118 in.]※
PB : Positive common B type, lead wire length 300 mm [11.8 in.]※
PB3: Positive common B type, lead wire length 3000 mm [118 in.]※
PC : Positive common C type, lead wire length 300 mm [11.8 in.]※
PC3: Positive common C type, lead wire length 3000 mm [118 in.]※
※A common connector assembly.

JAZ0 - P - □ (for single use only)

Valve specification
For **T0/T1**

IP specification

Connector specification
CP : Connector, lead wire length 300 mm [11.8 in.] (black, red, for total of 2 lead wires)
CP3: Connector, lead wire length 3000 mm [118 in.] (black, red, for total of 2 lead wires)
PA : Positive common A type, lead wire length 300 mm [11.8 in.]※
PA3: Positive common A type, lead wire length 3000 mm [118 in.]※
PB : Positive common B type, lead wire length 300 mm [11.8 in.]※
PB3: Positive common B type, lead wire length 3000 mm [118 in.]※
PC : Positive common C type, lead wire length 300 mm [11.8 in.] ※
PC3: Positive common C type, lead wire length 3000 mm [118 in.]※
※A common connector assembly.

Notes:
1. When the valve specification is **T1**, select the **JAZ0-P-** □ single dedicated type.
2. When switching between the single and double type (**T1**/**T2**), purchase and use a dedicated connector for single or double use (the number of seal holes in the lead wire differs for the single and double type).
3. There is no white lead wire for the **JAZ0-P-** □ .
4. It is necessary to disassemble the connector to add a common connector assembly. Contact your nearest KOGANEI sales office.
5. For information on use in locations/atmospheres subject to substances other than water, such as organic solvents, cutting oil, or reagents, contact your nearest KOGANEI sales office.
6. For information on replacing the waterproof seal, contact your nearest KOGANEI sales office.

F18 Series Monoblock Manifold A Type (Base Piping Type) Order Codes

Valve size

F18M

18 mm [0.709 in.] width

Manifold outlet specification

With dual use fitting blocks (base piping type)

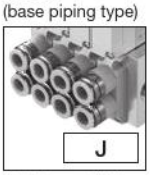

Outlet port fitting
ϕ 8, ϕ 10

With selectable fittings (base piping type)

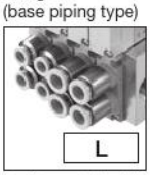

Outlet port should be selected in accordance with the manifold fitting specification.

With female thread blocks (base piping type)

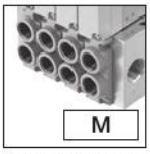

Outlet port female thread
Rc1/4

Valve specification

- **T0**: 2-position, for single solenoid only
- **T1**: 2-position, single solenoid specification
- **T2**: 2-position, double solenoid specification
- **T3**: 3-position, closed center
- **T4**: 3-position, exhaust center Note6
- **T5**: 3-position, pressure center Note6

Pilot specification

Blank
Internal pilot manifold

G
External pilot manifold

Operation type

Blank
Internal pilot type Note4

G
External pilot type Note5 (for positive pressure)

V
External pilot type Note5 (for vacuum)※
※ This is a vacuum valve.
Note: Cannot be mounted together with a positive pressure valve.

Manual override

Manual override button

No protrusion with DIN connector

Manual override lever Note2

Protruding locking type Note12

Valve outlet type

With plate Note3 (base piping type)

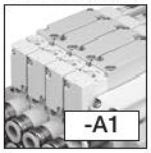

Wiring specification

L type plug connector
Without connector

S type plug connector
Without connector

S type plug connector
Lead wire 300 mm※

L type plug connector
Lead wire 300 mm※

S type plug connector
Lead wire 3000 mm※

L type plug connector
Lead wire 3000 mm※

Pre-wired positive common terminal
S type plug connector
Lead wire 300 mm※

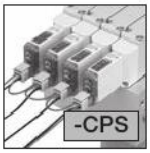

Pre-wired positive common terminal
L type plug connector
Lead wire 300 mm※

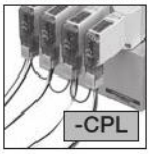

Pre-wired positive common terminal
S type plug connector
Lead wire 3000 mm※

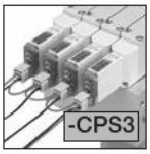

Pre-wired positive common terminal
L type plug connector
Lead wire 3000 mm※

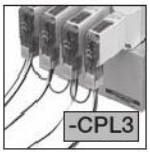

DIN connector type with indicator Note13

DIN connector type without connector Note13

-39N

※ 300 mm = 11.8 in.
3000 mm = 118 in.

Individual air supply and exhaust spacer

Blank : No spacer
-NP8 : Individual air supply spacer (with ϕ 8 fitting) Note11
-NP0 : Individual air supply spacer (with ϕ 10 fitting) Note11
-NR8 : Individual exhaust spacer (with ϕ 8 fitting) Note11
-NR0 : Individual exhaust spacer (with ϕ 10 fitting) Note11
For details, see p. 26.

Manifold fitting specification

-J5 With single use ϕ 8 fitting block Note9 (base piping type)

-J6 With single use ϕ 10 fitting block Note9 (base piping type)

-MH With female thread NPT1/4 block Note15 (base piping type)

Valve size	Valve units	Manifold type	Manifold outlet specification	Pilot specification	Station	Valve size	Valve specification	Operation type	Manual override	Valve outlet type	Wiring specification	Manifold fitting specification	Individual air supply and exhaust spacer	Voltage
Manifold model					Mounting valve model									
F18M	2 : 20	A	J M	Blank G	stn. 1 : stn.□ Note1	F18 F18L	T0 T1 T2 T3 T4 Note6 T5 Note6 TA Note7 TB Note7 TC Note7	Blank Note4 G Note5 V Note5	Blank -R Note2	-A1 Note3	Blank -PN -PS -PL -PS3 -PL3 -CPS -CPL -CPS3 -CPL3	Blank -NP8 Note16 -NP0 Note16 -NR8 Note16 -NR0 Note16	DC24V DC12V AC100V
							BP (for block-off plate)							
		A AH	L	Blank G	stn. 1 : stn.□ Note1	F18 F18L	T0 T1 T2 T3 T4 Note6 T5 Note6 TA Note7 TB Note7 TC Note7	Blank Note4 G Note5 V Note5	Blank -R Note2 -83 Note7	-A1 Note3	Blank -PN -PS -PL -PS3 -PL3 -CPS -CPL -CPS3 -CPL3 -39L Note13 -39N Note13	-J5 Note9 -J6 Note9 -MH Note15	Blank -NP8 Note16 -NP0 Note16 -NR8 Note16 -NR0 Note16	DC24V DC12V AC100V Note16 AC120V AC240V Note12
							BP (for block-off plate)							

Notes:
1. Valve mounting location is from the left, with the solenoid on top, and the 4(A), 2(B) ports side in front.
2. When the valve specification is **T1** or **T2**, the manual override lever is placed only on the A side. This is not available with **-39**□.
3. Always enter **-A1**.
4. Cannot be mounted on the external pilot manifold.
5. Cannot be mounted on the internal pilot manifold.
6. Not available in the vacuum valves.
7. Not available in external pilot type and vacuum valves.
8. Not available in low-current type.
9. Not available in the low current type and tandem 3-port valves.
10. The **-P**□ (including when Blank) and **-CP**□ wiring specifications cannot be mixed.
11. The IP65 protective structure around an electrical device that prevents the infiltration of solid foreign material and water from outside.
12. Only for wiring specification **-39**□.
13. Not available for valve specification **T1**. In addition, the valve is used only as a double solenoid for **T2**.
14. Can be selected only when the manifold type is **A**.
15. Can be selected only when the manifold type is **AH**.
16. Not available with DIN connectors (**-39**□).

Remark: Negative common specifications are also available as made to order products (add -129W to the ends of the valve and manifold model order codes). For details, consult us.

Gasket (gasket and exhaust valve)

F18 Z - GS1

Valve size
18: 18 mm
[0.709 in.] width

Block-off plate (block-off plate and 2 mounting screws)

F18 BP

Valve size
18: 18 mm
[0.709 in.] width

Connector-related order codes

FZ□ - □

Valve specification
Blank: For **T1, T2, T3, T4, T5**
0: For **T0**

Connector specification
CP : Connector, lead wire length 300 mm [11.8 in.]
CP3 : Connector, lead wire length 3000 mm [118 in.]
CLN : Connector without lead wire (short bar and contacts included)
PA : Positive common A type, lead wire length 300 mm [11.8 in.] ※
PA3 : Positive common A type, lead wire length 3000 mm [118 in.] ※
PB : Positive common B type, lead wire length 300 mm [11.8 in.] ※
PB3 : Positive common B type, lead wire length 3000 mm [118 in.] ※
PC : Positive common C type, lead wire length 300 mm [11.8 in.] ※
PC3 : Positive common C type, lead wire length 3000 mm [118 in.] ※
CC1.5 : Cabtyre cable, length 1500 mm [59 in.] Note ※
CC3 : Cabtyre cable, length 3000 mm [118 in.] Note ※

※ For details, see p. 19.

Note: Not available for **T0**

● Common connector assembly

A type: FZ-PA□※

Red Common wire (+)
Black A side (–)
White B side (–) (Insert when using as double solenoid) Note

B type: FZ-PB□※

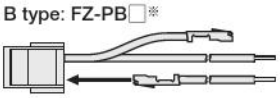

Red Common wire (+)
Black A side (–)
White B side (–) (Insert when using as double solenoid) Note

C type: FZ-PC□※

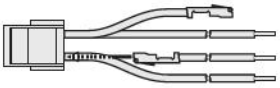

Red Common wire (+)
Black A side (–)
White B side (–) (Insert when using as double solenoid) Note
Red Common wire (+)

※ Lead wire length **Blank:** 300 mm [11.8 in.]
3: 3000 mm [118 in.]

Note: White lead wire is not available for **FZ0-P□□**.

Manifold Order Code Example

(6 units of F18 Series)

F18M6AL

stn.1～2 F18T0-A1-PS-J5 DC24V
stn.3～5 F18T2-A1-PS-J6 DC24V
stn.6 F18BP-J6

Individual air supply and exhaust spacer (Spacer for non-plug-in type, gasket, exhaust valve, and 2 mounting screws)

F18 Z - □

Valve size
18: 18 mm
[0.709 in.] width

Specification
NP8 : Individual air supply spacer (with ϕ 8 fitting)
NP0 : Individual air supply spacer (with ϕ 10 fitting)
NR8 : Individual exhaust spacer (with ϕ 8 fitting)
NR0 : Individual exhaust spacer (with ϕ 10 fitting)

※ For details, see p. 26.
※ Not available with DIN connectors (**-39□**).

Muffler

KM - J □

Fitting size
8: Outer diameter ϕ 8 (for individual exhaust spacer)
10: Outer diameter ϕ 10 (for individual exhaust spacer)
(Sales unit: Set of 10 mufflers)

Connector-related order codes

JAZ - P - □ (for double use only)

Valve specification
For **T2, T3, T4, T5, TA, TB,** or **TC**

IP specification

Connector specification
CP : Connector, lead wire length 300 mm [11.8 in.] (black, red, white, for total of 3 lead wires)
CP3 : Connector, lead wire length 3000 mm [118 in.] (black, red, white, for total of 3 lead wires)
PA : Positive common A type, lead wire length 300 mm [11.8 in.]※
PA3 : Positive common A type, lead wire length 3000 mm [118 in.]※
PB : Positive common B type, lead wire length 300 mm [11.8 in.]※
PB3 : Positive common B type, lead wire length 3000 mm [118 in.]※
PC : Positive common C type, lead wire length 300 mm [11.8 in.]※
PC3 : Positive common C type, lead wire length 3000 mm [118 in.]※
※A common connector assembly.

Notes: 1. When the valve specification is **T1**, select the **JAZ0-P-□** single dedicated type.
2. When switching between the single and double type (**T1**/**T2**), purchase and use a dedicated connector for single or double use (the number of seal holes in the lead wire differs for the single and double type).
3. There is no white lead wire for the **JAZ0-P-□**.
4. It is necessary to disassemble the connector to add a common connector assembly. Contact your nearest KOGANEI sales office.
5. For information on use in locations/atmospheres subject to substances other than water, such as organic solvents, cutting oil, or reagents, contact your nearest KOGANEI sales office.
6. For information on replacing the waterproof seal, contact your nearest KOGANEI sales office.

JAZ0 - P - □ (for single use only)

Valve specification
For **T0/T1**

IP specification

Connector specification
CP : Connector, lead wire length 300 mm [11.8 in.] (black, red, for total of 2 lead wires)
CP3 : Connector, lead wire length 3000 mm [118 in.] (black, red, for total of 2 lead wires)
PA : Positive common A type, lead wire length 300 mm [11.8 in.]※
PA3 : Positive common A type, lead wire length 3000 mm [118 in.]※
PB : Positive common B type, lead wire length 300 mm [11.8 in.]※
PB3 : Positive common B type, lead wire length 3000 mm [118 in.]※
PC : Positive common C type, lead wire length 300 mm [11.8 in.]※
PC3 : Positive common C type, lead wire length 3000 mm [118 in.]※
※A common connector assembly.

Precautions for Order Codes

● **Manifold outlet specification**
Select from among "dual use fitting blocks", "with female thread blocks" or "with selectable fittings." For repair or replacement, purchase the single valve unit additional parts, **F18Z-J** (dual use fitting block), **F18Z-J** □ (single use fitting block), or **F18Z-M** □ (female thread block), on p. 260.

● **Orders for valves only**
Place orders from "F18 Series Single Valve Unit Order Codes" on p. 259. Note, however, that the only available valve outlet type is **A1**. In addition, for common terminal wiring connections, order the common connector assemblies listed above separately.

F18 Series Monoblock Manifold F Type (Direct Piping Type) Order Codes

Valve size

F18M

18 mm [0.709 in.] width

Valve specification

- **T0 :** 2-position, for single solenoid only
- **T1 :** 2-position, single solenoid specification
- **T2 :** 2-position, double solenoid specification
- **T3 :** 3-position, closed center
- **T4 :** 3-position, exhaust center
- **T5 :** 3-position, pressure center
- **TA :** Tandem 3-port (NC and NC)
- **TB :** Tandem 3-port (NO and NO)
- **TC :** Tandem 3-port (NC and NO)

Manual override

Manual override button

No protrusion with DIN connector

Manual override lever[Note2]

Protruding locking type[Note7]

Valve outlet type

- **-FJ** With dual use ϕ8, ϕ10 fitting block[Note5] (direct piping type)
- **-FJ5** With single use ϕ8 fitting block[Note5] (direct piping type)
- **-FJ6** With single use ϕ10 fitting block[Note5] (direct piping type)
- **-FM** With Rc1/4 female thread block[Note5] (direct piping type)
- **-FMH** With NPT1/4 female thread block[Note10] (direct piping type)

Wiring specification

L type plug connector
Without connector

S type plug connector
Without connector

S type plug connector
Lead wire 300 mm※

L type plug connector
Lead wire 300 mm※

S type plug connector
Lead wire 3000 mm※

L type plug connector
Lead wire 3000 mm※

Pre-wired positive common terminal
S type plug connector
Lead wire 300 mm※

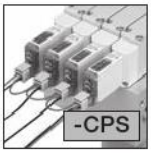

Pre-wired positive common terminal
L type plug connector
Lead wire 300 mm※

Pre-wired positive common terminal
S type plug connector
Lead wire 3000 mm※

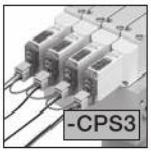

Pre-wired positive common terminal
L type plug connector
Lead wire 3000 mm※

※ 300 mm = 11.8 in.
3000 mm = 118 in.

DIN connector type with indicator[Note8]

DIN connector type without connector[Note8]

-39N

Individual air supply and exhaust spacer

- **Blank :** No spacer
- **-NP8 :** Individual air supply spacer (with ϕ8 fitting)[Note11]
- **-NP0 :** Individual air supply spacer (with ϕ10 fitting)[Note11]
- **-NR8 :** Individual exhaust spacer (with ϕ8 fitting)[Note11]
- **-NR0 :** Individual exhaust spacer (with ϕ10 fitting)[Note11]

For details, see p. 26.

Valve size	Valve units	Manifold type	Station	Valve size	Valve specification	IP specification	Manual override	Valve outlet type	Wiring specification	Individual air supply and exhaust spacer	Voltage
Manifold model			Mounting valve model								
F18M	2 : 20	F FH	stn. 1 : stn.□ Note1	F18	T0 T3 T1 T4 T2 T5	Blank -P[Note7]	Blank -R[Note2] -83[Note3]	-FJ[Note9] -FJ5[Note9] -FJ6[Note9] -FM[Note9] -FMH[Note10]	Blank -CPS -PN -CPL -PS -CPS3 -PL -CPL3 -PS3 -39L[Note8] -PL3 -39N[Note8]	Blank -NP8[Note11] -NP0[Note11] -NR8[Note11] -NR0[Note11]	DC24V DC12V AC100V[Note11] AC120V AC240V[Note7]
					BP (for block-off plate)						

Notes:
1. Valve mounting location is from the left, with the solenoid on top, and the 4(A), 2(B) ports side in front.
2. When the valve specification is **T1** or **T2**, the manual override lever is placed only on the A side. This is not available with **-39**□.
3. Not available in low-current type.
4. Not available in low-current type and tandem 3-port valves.
5. The **-P**□ (including when Blank) and **-CP**□ wiring specifications cannot be mixed.
6. The IP65 protective structure around an electrical device that prevents the infiltration of solid foreign material and water from outside.
7. Only for wiring specification **-39**□.
8. Not available for valve specification **T1**. In addition, the valve is used only as a double solenoid for **T2**.
9. Can be selected only when the manifold type is **F**.
10. Can be selected only when the manifold type is **FH**.
11. Not available with DIN connectors (**-39**□).

Remarks:
1. The external pilot valve cannot be mounted on the F type manifold.
2. Negative common specifications are also available as made to order products (add **-129W** to the ends of the valve and manifold model order codes). For details, consult us.

Gasket (gasket and exhaust valve)

F18 Z - GS1

Valve size
18: 18 mm
[0.709 in.] width

Block-off plate (block-off plate and 2 mounting screws)

F18 BP

Valve size
18: 18 mm
[0.709 in.] width

Connector-related order codes

FZ□ - □

Valve specification
Blank: For **T1, T2, T3, T4, T5**
0: For **T0**

Connector specification
CP : Connector, lead wire length 300 mm [11.8 in.]
CP3 : Connector, lead wire length 3000 mm [118 in.]
CLN : Connector without lead wire (short bar and contacts included)
PA : Positive common A type, lead wire length 300 mm [11.8 in.] ※
PA3 : Positive common A type, lead wire length 3000 mm [118 in.] ※
PB : Positive common B type, lead wire length 300 mm [11.8 in.] ※
PB3 : Positive common B type, lead wire length 3000 mm [118 in.] ※
PC : Positive common C type, lead wire length 300 mm [11.8 in.] ※
PC3 : Positive common C type, lead wire length 3000 mm [118 in.] ※
CC1.5 : Cabtyre cable, length 1500 mm [59 in.] Note ※
CC3 : Cabtyre cable, length 3000 mm [118 in.] Note ※

※ For details, see p. 19.

Note: Not available for **T0**

● Common connector assembly

A type: FZ-PA□※

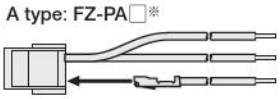

Red Common wire (+)
Black A side (–)
White B side (–) (Insert when using as double solenoid) Note

B type: FZ-PB□※

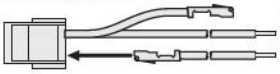

Red Common wire (+)
Black A side (–)
White B side (–) (Insert when using as double solenoid) Note

C type: FZ-PC□※

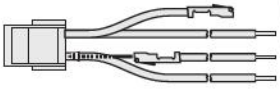

Red Common wire (+)
Black A side (–)
White B side (–) (Insert when using as double solenoid) Note
Red Common wire (+)

※ Lead wire length **Blank:** 300 mm [11.8 in.]
3: 3000 mm [118 in.]

Note: White lead wire is not available for **FZ0-P□□**.

Manifold Order Code Example

(4 units of F18 Series)

F18M4F

stn.1～2 F18T0-FJ5-PS DC24V
stn.3 F18T2-FJ6-PS DC24V
stn.4 F18BP

Individual air supply and exhaust spacer (Spacer for non-plug-in type, gasket, exhaust valve, and 2 mounting screws)

F18 Z - □

Valve size
18: 18 mm
[0.709 in.] width

Specification
NP8 : Individual air supply spacer (with ϕ 8 fitting)
NP0 : Individual air supply spacer (with ϕ 10 fitting)
NR8 : Individual exhaust spacer (with ϕ 8 fitting)
NR0 : Individual exhaust spacer (with ϕ 10 fitting)

※ For details, see p. 26.
※ Not available with DIN connectors (**-39□**).

Muffler

KM - J□

Fitting size
8: Outer diameter ϕ 8 (for individual exhaust spacer)
10: Outer diameter ϕ 10 (for individual exhaust spacer)
(Sales unit: Set of 10 mufflers)

Connector-related order codes

JAZ - P - □ (for double use only)

Valve specification
For **T2, T3, T4, T5, TA, TB,** or **TC**

IP specification

Connector specification
CP : Connector, lead wire length 300 mm [11.8 in.] (black, red, white, for total of 3 lead wires)
CP3 : Connector, lead wire length 3000 mm [118 in.] (black, red, white, for total of 3 lead wires)
PA : Positive common A type, lead wire length 300 mm [11.8 in.]※
PA3 : Positive common A type, lead wire length 3000 mm [118 in.]※
PB : Positive common B type, lead wire length 300 mm [11.8 in.]※
PB3 : Positive common B type, lead wire length 3000 mm [118 in.]※
PC : Positive common C type, lead wire length 300 mm [11.8 in.]※
PC3 : Positive common C type, lead wire length 3000 mm [118 in.]※
※A common connector assembly.

Notes:
1. When the valve specification is **T1**, select the **JAZ0-P-□** single dedicated type.
2. When switching between the single and double type (**T1/T2**), purchase and use a dedicated connector for single or double use (the number of seal holes in the lead wire differs for the single and double type).
3. There is no white lead wire for the **JAZ0-P-□**.
4. It is necessary to disassemble the connector to add a common connector assembly. Contact your nearest KOGANEI sales office.
5. For information on use in locations/atmospheres subject to substances other than water, such as organic solvents, cutting oil, or reagents, contact your nearest KOGANEI sales office.
6. For information on replacing the waterproof seal, contact your nearest KOGANEI sales office.

JAZ0 - P - □ (for single use only)

Valve specification
For **T0/T1**

IP specification

Connector specification
CP : Connector, lead wire length 300 mm [11.8 in.] (black, red, for total of 2 lead wires)
CP3 : Connector, lead wire length 3000 mm [118 in.] (black, red, for total of 2 lead wires)
PA : Positive common A type, lead wire length 300 mm [11.8 in.]※
PA3 : Positive common A type, lead wire length 3000 mm [118 in.]※
PB : Positive common B type, lead wire length 300 mm [11.8 in.]※
PB3 : Positive common B type, lead wire length 3000 mm [118 in.]※
PC : Positive common C type, lead wire length 300 mm [11.8 in.]※
PC3 : Positive common C type, lead wire length 3000 mm [118 in.]※
※A common connector assembly.

Precautions for Order Codes

● **Orders for valves only**
Place orders from "F18 Series Single Valve Unit Order Codes" on p. 259.
Select from valve outlet types **-FJ, -FJ5, -FJ6,** or **-FM□**. In addition, for common terminal wiring connections, order the common connector assemblies listed above separately.

F18 Series Split Manifold Non-Plug-in Type Order Codes

■ Valve size

F18M
18 mm [0.709 in.] width

■ Manifold outlet specification

With dual use fitting blocks (base piping type)

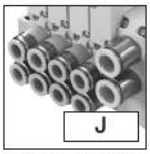

Outlet port fitting
ϕ 8, ϕ10

With selectable fittings (base piping type)

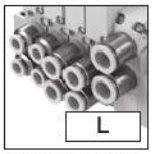

Outlet port should be selected in accordance with the manifold fitting specification.

With female thread blocks (base piping type)

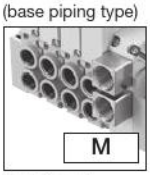

Outlet port female thread
Rc1/4

With plates (direct piping type)

■ Pilot specification

Blank
Internal pilot manifold

G
External pilot manifold

■ Piping block specification (air supply and exhaust)

Fitting block
-JR : Fitting block, right-side mounting[Note7]
-JL : Fitting block, left-side mounting[Note7]
-JD : Fitting block, both-side mounting[Note7]
Fitting size (1(P), 3, 5(R) ports), ϕ12

Female thread block
-MR : Female thread, right-side mounting[Note7]
-ML : Female thread, left-side mounting[Note7]
-MD : Female thread, both-side mounting[Note7]
Female thread size (1(P), 3, 5(R) ports), Rc3/8

Female thread block
-MRH: Female thread, right-side mounting[Note8]
-MLH : Female thread, left-side mounting[Note8]
-MDH: Female thread, both-side mounting[Note8]
Female thread size (1(P), 3, 5(R) ports), NPT3/8

■ Valve size

F18 Standard type

F18L Low-current type

	Valve size	Valve units	Manifold type	Manifold outlet specification	Pilot specification	Piping block specification
	Manifold model					
Base piping type	F18M	2 : 20	N	J M	Blank G	-JR -MR -JL -ML -JD -MD
Base piping type selectable fitting			N NH	L	Blank G	-JR[Note7] -MR[Note7] -MRH[Note8] -JL[Note7] -ML[Note7] -MLH[Note8] -JD[Note7] -MD[Note7] -MDH[Note8]
Direct piping type				Blank	Blank G	-JR[Note7] -MR[Note7] -MRH[Note8] -JL[Note7] -ML[Note7] -MLH[Note8] -JD[Note7] -MD[Note7] -MDH[Note8]

Remark: Negative common specifications are also available as made to order products (add **-129W** to the ends of the valve and manifold model order codes). For details, consult us.

Valve specification

- T0 : 2-position, for single solenoid only
- T1 : 2-position, single solenoid specification
- T2 : 2-position, double solenoid specification
- T3 : 3-position, closed center
- T4 : 3-position, exhaust center
- T5 : 3-position, pressure center
- TA : Tandem 3-port (NC and NC)[Note7]
- TB : Tandem 3-port (NO and NO)[Note7]
- TC : Tandem 3-port (NC and NO)[Note7]

Valve outlet type

- **-A1** With plate[Note3] (base piping type)
- **-FJ** With dual use ϕ 8, ϕ 10 fitting block[Note7] (direct piping type)
- **-FJ5** With single use ϕ 8 fitting block[Note7] (direct piping type)
- **-FJ6** With single use ϕ 10 fitting block[Note7] (direct piping type)
- **-FM** With Rc1/4 female thread block[Note7] (direct piping type)
- **-FMH** With NPT1/4 female thread block[Note8] (direct piping type)

Wiring specification

S type plug connector
Without connector

S type plug connector
Lead wire 300 mm※

S type plug connector
Lead wire 3000 mm※

Pre-wired positive common terminal
S type plug connector
Lead wire 300 mm※

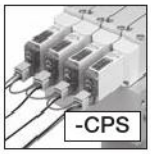

Pre-wired positive common terminal
S type plug connector
Lead wire 3000 mm※

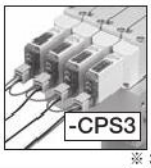

※ 300 mm = 11.8 in.
3000 mm = 118 in.

Manifold fitting specification

- **-J5** With single use ϕ 8 fitting block[Note7] (base piping type)
- **-J6** With single use ϕ 10 fitting block[Note7] (base piping type)
- **-MH** With NPT1/4 female thread block[Note8] (base piping type)

Operation type

Blank
Internal pilot type[Note5]

G
External pilot type[Note6]
(for positive pressure)
※ No vacuum valve can be mounted.

Manual override

Manual override button

Manual override lever[Note2]

Individual air supply and exhaust spacer

- **Blank** : No spacer
- **-NP8** : Individual air supply spacer (with ϕ 8 fitting)
- **-NP0** : Individual air supply spacer (with ϕ 10 fitting)
- **-NR8** : Individual exhaust spacer (with ϕ 8 fitting)
- **-NR0** : Individual exhaust spacer (with ϕ 10 fitting)

For details, see p. 26.

Port isolator

- **Blank** : No port isolator
- **-SP** : For 1(P) port[Note4]
- **-SR** : For 3(R2), 5(R1) ports[Note4]
- **-SA** : For 1(P), 3(R2), and 5(R1) ports[Note4]

Station	Valve size	Valve specification	Operation type	IP specification	Manual override	Valve outlet type	Wiring specification	Manifold fitting specification	Individual air supply and exhaust spacer	Port isolator	Voltage
Mounting valve model											
stn. 1 : stn.□ Note1	F18 F18L	T0 T1 T2 T3 T4 T5 TA[Note7] TB[Note7] TC[Note7]	Blank[Note5] G[Note6]	Blank -P[Note11]	Blank -R[Note2]	-A1[Note3]	-PN -PS -PS3 -CPS -CPS3		Blank -NP8 -NR8 -NP0 -NR0	Blank -SP[Note4] -SR[Note4] -SA[Note4]	DC24V DC12V[Note8] AC100V[Note9] AC120V
		BPN (for block-off plate)									
stn. 1 : stn.□ Note1	F18 F18L	T0 T1 T2 T3 T4 T5 TA[Note7] TB[Note7] TC[Note7]	Blank[Note5] G[Note6]	Blank -P[Note11]	Blank -R[Note2]	-A1[Note3]	-PN -PS -PS3 -CPS -CPS3	-J5[Note12] -J6[Note12] -MH[Note13]	Blank -NP8 -NR8 -NP0 -NR0	Blank -SP[Note4] -SR[Note4] -SA[Note4]	DC24V DC12V[Note8] AC100V[Note9] AC120V
		BPN (for block-off plate)									
stn. 1 : stn.□ Note1	F18 F18L	T0 T1 T2 T3 T4 T5 TA[Note7] TB[Note7] TC[Note7]	Blank[Note5] G[Note6]	Blank -P[Note11]	Blank -R[Note2]	-FJ[Note12] -FJ5[Note12] -FJ6[Note12] -FM[Note12] -FMH[Note13]	-PN -PS -PS3 -CPS -CPS3		Blank -NP8 -NR8 -NP0 -NR0	Blank -SP[Note4] -SR[Note4] -SA[Note4]	DC24V DC12V[Note8] AC100V[Note9] AC120V
		BPN (for block-off plate)									

Notes:
1. Valve mounting location is from the left, with the solenoid on top, and the 4(A), 2(B) ports side in front.
2. When the valve specification is **T1** or **T2**, the manual override lever is placed only on the A side.
3. When selecting **J**, **M**, or **L** (base piping type) for the manifold outlet specification, always enter **-A1** (with plate) for the valve outlet type.
4. Port isolators can be installed only when piping blocks are mounted on both sides. In addition, only 1 port isolator can be mounted in 1 manifold for **-SA**, or 1 each port isolator for **-SP** and **-SR** for a total of 2 locations. When shipping, the designated port isolators are mounted between the designated station and the station to its immediate left (the next smaller stn. No.).
5. Cannot be mounted on the external pilot manifold.
6. Cannot be mounted on the internal pilot manifold.
7. Not available in external pilot type.
8. Not available in low-current type.
9. Not available in low-current type and tandem 3-port valves.
10. The **-P** □ (including when Blank) and **-CP** □ wiring specifications cannot be mixed.
11. The IP65 protective structure around an electrical device that prevents the infiltration of solid foreign material and water from outside.
12. Can be selected only when the manifold type is **N**.
13. Can be selected only when the manifold type is **NH**.

Parts for manifold

F18 Z - □

Valve size
18: 18 mm
[0.709 in.] width

Parts content
GS2 : Gasket (gasket and exhaust valve)
SP : Port isolator (for 1(P) port)
SR : Port isolator (for 3(R2), 5(R1) ports)
SA : Port isolator (for 1(P), 3(R2), 5(R1) ports)

Block-off plate (block-off plate, 2 mounting screws)

F18 BP N

Valve size
18: 18 mm
[0.709 in.] width

For non-plug-in type

Connector-related order codes

JAZ □ - □

300 mm = 11.8 in.
1500 mm = 59 in.
3000 mm = 118 in.

Valve specification
Blank: For **T1, T2, T3, T4, T5**
0: For **T0**

※ For details, see p. 23.

Connector specification
CP : Connector, lead wire length 300 mm
CP3 : Connector, lead wire length 3000 mm
CLN : Connector without lead wire (short bar, contacts included)
PA : Positive common A type, lead wire length 300 mm ※
PA3 : Positive common A type, lead wire length 3000 mm ※
PB : Positive common B type, lead wire length 300 mm ※
PB3 : Positive common B type, lead wire length 3000 mm ※
PC : Positive common C type, lead wire length 300 mm ※
PC3 : Positive common C type, lead wire length 3000 mm ※

FZ - □

Valve specification
T1, T2, T3, T4, T5, TA, TB, TC

Connector specification
CC1.5 : Cabtyre cable, length 1500 mm ※
CC3 : Cabtyre cable, length 3000 mm ※

● Common connector assembly

A type: FZ-PA□※

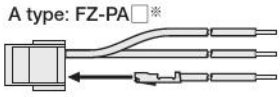

Red Common wire (+)
Black A side (–)
White B side (–) (Insert when using as double solenoid) Note

B type: FZ-PB□※

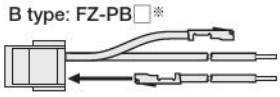

Red Common wire (+)
Black A side (–)
White B side (–) (Insert when using as double solenoid) Note

C type: FZ-PC□※

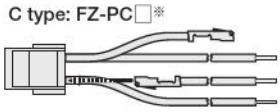

Red Common wire (+)
Black A side (–)
White B side (–) (Insert when using as double solenoid) Note
Red Common wire (+)

※ Lead wire length **Blank:** 300 mm [11.8 in.]
3: 3000 mm [118 in.]

Note: White lead wire is not available for **FZ0-P□□**.

Valve base assembly (valve base and gasket)

F18 Z - □

Valve size
18: 18 mm
[0.709 in.] width

Piping specification
VJ : Dual use fitting valve base
VJ5 : Single use ϕ8 fitting valve base
VJ6 : Single use ϕ10 fitting valve base
VM : Rc1/4 female thread valve base
VMH : NPT1/4 female thread valve base
VP : Valve base plate

Piping block assembly

F18 Z □ - □

Valve size
18: 18 mm
[0.709 in.] width

Piping specification
PJ : Fitting piping block
PM : Rc3/8 female thread piping block
PMH : NPT3/8 female thread piping block

Pilot specification
Blank : Internal pilot
G : External pilot

End blocks (one set of left and right)

F18 Z - E

Valve size
18: 18 mm [0.709 in.] width

Individual air supply and exhaust spacer (Spacer for non-plug-in type, gasket, exhaust valve, and 2 mounting screws)

F18 Z - □

Valve size
18: 18 mm
[0.709 in.] width

Specification
NP8 : Individual air supply spacer (with ϕ8 fitting)
NP0 : Individual air supply spacer (with ϕ10 fitting)
NR8 : Individual exhaust spacer (with ϕ8 fitting)
NR0 : Individual exhaust spacer (with ϕ10 fitting)

※ For details, see p. 26.

Muffler

KM - J □

Fitting size
8: Outer diameter ϕ8 (for individual exhaust spacer)
10: Outer diameter ϕ10 (for individual exhaust spacer)
12: Outer diameter ϕ12
(Sales unit: Set of 10 mufflers)

Connecting rod

F18 Z - □ - □

Valve size
18: 18 mm
[0.709 in.] width

Additional unit number
01～20 (01～04 for RH)
※ For reduction of units, consult us.

Specification
RV : For valve base
RH : For piping and wiring base

Manifold Order Code Example

(4 units of F18 Series)

F18M4NL-JR

stn.1～2	F18T0-A1-PS-J5 DC24V
stn.3	F18T2-A1-PS-J6 DC24V
stn.4	F18BPN-J6

Precautions for Order Codes

● **Orders for valves only**
Place orders from "F18 Series Single Valve Unit Order Codes" on p. 72. However, **Blank, A2□, F3, F4□, F5,** and **F6,** cannot be selected for the valve outlet type. And for the wiring specification, **Blank, PL,** and **PL3** cannot be selected. In addition, for common terminal wiring connections, separately order the common connector assemblies listed on the left.

Connector-related order codes

JAZ - P - □ (for double use only)

Valve specification
For **T2, T3, T4, T5, TA, TB,** or **TC**

Connector specification

CP : Connector, lead wire length 300 mm [11.8 in.] (black, red, white, for total of 3 lead wires)
CP3 : Connector, lead wire length 3000 mm [118 in.] (black, red, white, for total of 3 lead wires)
PA : Positive common A type, lead wire length 300 mm [11.8 in.]※
PA3 : Positive common A type, lead wire length 3000 mm [118 in.]※
PB : Positive common B type, lead wire length 300 mm [11.8 in.]※
PB3 : Positive common B type, lead wire length 3000 mm [118 in.]※
PC : Positive common C type, lead wire length 300 mm [11.8 in.]※
PC3 : Positive common C type, lead wire length 3000 mm [118 in.]※
※A common connector assembly.

Notes:
1. When the valve specification is **T1**, select the **JAZ0-P-** □ single dedicated type.
2. When switching between the single and double type (**T1**/**T2**), purchase and use a dedicated connector for single or double use (the number of seal holes in the lead wire differs for the single and double type).
3. There is no white lead wire for the **JAZ0-P-** □ .
4. It is necessary to disassemble the connector to add a common connector assembly. Contact your nearest KOGANEI sales office.
5. For information on use in locations/atmospheres subject to substances other than water, such as organic solvents, cutting oil, or reagents, contact your nearest KOGANEI sales office.
6. For information on replacing the waterproof seal, contact your nearest KOGANEI sales office.

JAZ0 - P - □ (for single use only)

Valve specification
For **T0/T1**

Connector specification

CP : Connector, lead wire length 300 mm [11.8 in.] (black, red, for total of 2 lead wires)
CP3 : Connector, lead wire length 3000 mm [118 in.] (black, red, for total of 2 lead wires)
PA : Positive common A type, lead wire length 300 mm [11.8 in.]※
PA3 : Positive common A type, lead wire length 3000 mm [118 in.]※
PB : Positive common B type, lead wire length 300 mm [11.8 in.]※
PB3 : Positive common B type, lead wire length 3000 mm [118 in.]※
PC : Positive common C type, lead wire length 300 mm [11.8 in.] ※
PC3 : Positive common C type, lead wire length 3000 mm [118 in.]※
※A common connector assembly.

F18 Series Split Manifold Plug-in Type Order Codes

■ Manifold outlet specification

With dual use fitting blocks (base piping type)

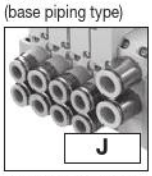

Outlet port fitting
ϕ 8, ϕ10

With selectable fittings (base piping type)

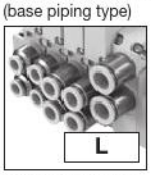

Outlet port should be selected in accordance with the manifold fitting specification.

With female thread blocks (base piping type)

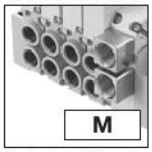

Outlet port female thread
Rc1/4

With plates (direct piping type)

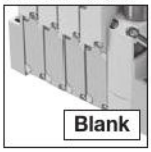

■ Pilot specification

Blank
Internal pilot manifold

G
External pilot manifold

■ Piping block specification (air supply and exhaust)

Fitting block
-JR : Fitting block, right-side mounting[Note11]
-JL : Fitting block, left-side mounting[Note11]
-JD : Fitting block, both-side mounting[Note11]
Fitting size (1(P), 3, 5(R) ports), ϕ 12

Female thread block
-MR : Female thread, right-side mounting[Note11]
-ML : Female thread, left-side mounting[Note11]
-MD : Female thread, both-side mounting[Note11]
Female thread size (1(P), 3, 5(R) ports), Rc3/8

Female thread block
-MRH: Female thread, right-side mounting[Note14]
-MLH: Female thread, left-side mounting[Note14]
-MDH: Female thread, both-side mounting[Note14]
Female thread size (1(P), 3, 5(R) ports), NPT3/8

■ Wiring specification (wiring block)

Flat cable connector (with socket and strain relief)

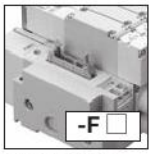

-F100: 10-pin
-F101: 10-pin
-F200: 20-pin
-F201: 20-pin
-F260: 26-pin
For details, see p. 47.

D-sub connector

(M2.6 mounting screws)
-D250 : 25-pin[Note13]
-D251 : 25-pin[Note13]
(4-40UNC mounting screws)
-D250U : 25-pin[Note14]
-D251U : 25-pin[Note14]
-D370NU: 37-pin, no-power terminal[Note14]
For details, see p. 47.

Terminal block (19 terminals, M3 screws)

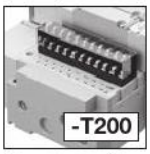

Also can provide the terminal block with cover.[Note3]

■ Wiring connection specification

Blank
Packed wiring: Wiring is made in accordance with the mounted valve specifications.

-W
Double wiring: Wiring is always for the double solenoid, regardless of the specifications of the mounted valve.

■ Wiring position (wiring block)

Blank: Left-side mounting
-R : Right-side mounting

■ Valve size

F18M
18 mm [0.709 in.] width

Valve size	Valve units	Manifold type	Manifold outlet specification	Pilot specification	Piping block specification	Wiring specification	Wiring connection specification	Wiring position	Voltage
Manifold model									
Base piping type	F18M	P	J M	Blank G	-JR -MR -JL -ML -JD -MD	-F100 -D250 -F101 -D251 -F200 -T200 -F201 -F260	Blank -W	Blank -R	DC24V DC12V AC100V[Note2] AC120V[Note2]
Base piping type selectable fitting	F18M	2 : □ Note1	P PH	L	Blank G	-JR[Note13] -MD[Note13] -JL[Note13] -MRH[Note14] -JD[Note13] -MLH[Note14] -MR[Note13] -MDH[Note14] -ML[Note13]	-F100 -D251[Note13] -F101 -D250U[Note14] -F200 -D251U[Note14] -F201 -D370NU[Note14] -F260 -T200 -D250[Note13]	Blank -W	Blank -R	DC24V DC12V AC100V[Note2] AC120V[Note2]
Direct piping type	F18M			Blank	Blank G	-JR[Note13] -MD[Note13] -JL[Note13] -MRH[Note14] -JD[Note13] -MLH[Note14] -MR[Note13] -MDH[Note14] -ML[Note13]	-F100 -D251[Note13] -F101 -D250U[Note14] -F200 -D251U[Note14] -F201 -D370NU[Note14] -F260 -T200 -D250[Note13]	Blank -W	Blank -R	DC24V DC12V AC100V[Note2] AC120V[Note2]

Notes: 1. For the maximum number of units, see the table for maximum number of valve units by wiring specification, on p. 272.
2. AC100V, AC120V is available only for the **-D250** □, **-D251** □, **-D370NU** (D-sub connector) and **-T200** (terminal block) wiring specifications.
3. The terminal block with cover is also available as a made to order product (add **-139W** to the end of the manifold model order code). For details, consult us.

Remark: Negative common specifications are also available as made to order products (add **-129W** to the ends of the valve and manifold model order codes). For details, consult us.

Valve specification

T0: 2-position, for single solenoid only
T1: 2-position, single solenoid specification
T2: 2-position, double solenoid specification
T3: 3-position, closed center
T4: 3-position, exhaust center
T5: 3-position, pressure center
TA: Tandem 3-port (NC and NC) Note12
TB: Tandem 3-port (NO and NO) Note12
TC: Tandem 3-port (NC and NO) Note12

Valve outlet type

-A1 With plate Note6 (base piping type)

-FJ With dual use ϕ 8, ϕ 10 fitting block Note12 (direct piping type)

-FJ5 With single use ϕ 8 fitting block Note12 (direct piping type)

-FJ6 With single use ϕ 10 fitting block Note12 (direct piping type)

-FM With Rc1/4 female thread block Note12 (direct piping type)

-FMH With NPT1/4 female thread block Note12 (direct piping type)

Manifold fitting specification

-J5 With single use ϕ 8 fitting block Note12 (base piping type)

-J6 With single use ϕ 10 fitting block Note12 (base piping type)

-MH With NPT1/4 female thread block Note13 (base piping type)

Port isolator

Blank : No port isolator
-SP : For 1(P) port Note9
-SR : For 3(R2), 5(R1) ports Note9
-SA : For 1(P), 3(R2), 5(R1) ports Note9

Operation type

Blank
Internal pilot type Note10

G
External pilot type Note11 (for positive pressure)
※ No vacuum valve can be mounted.

Manual override

Manual override button

Manual override lever Note7

Individual air supply and exhaust spacer

Blank : No spacer
-PP8 : Individual air supply spacer (with ϕ 8 fitting)
-PP0 : Individual air supply spacer (with ϕ 10 fitting)
-PR8 : Individual exhaust spacer (with ϕ 8 fitting)
-PR0 : Individual exhaust spacer (with ϕ 10 fitting)
For details, see p. 27.

Station	Valve size	Valve specification	Operation type	Manual override	Valve outlet type	Manifold fitting specification	Individual air supply and exhaust spacer	Port isolator	Voltage
Mounting valve model									
stn. 1 ⋮ stn.□ Note5	F18	T0 T1 T2 T3 T4 T5	Blank Note10 G Note11	Blank -R Note8	-A1 Note6		Blank -PP8 -PR8 -PP0 -PR0	Blank -SP Note9 -SR Note9 -SA Note9	DC24V DC12V AC100V Note2 AC120V Note2
BPP (for block-off plate) Note7									
stn. 1 ⋮ stn.□ Note5	F18	T0 T1 T2 T3 T4 T5	Blank Note10 G Note11	Blank -R Note8	-A1 Note6	-J5 Note13 -J6 Note13 -MH Note14	Blank -PP8 -PR8 -PP0 -PR0	Blank -SP Note9 -SR Note9 -SA Note9	DC24V DC12V AC100V Note2 AC120V Note2
BPP (for block-off plate) Note7									
stn. 1 ⋮ stn.□ Note5	F18	T0 T1 T2 T3 T4 T5	Blank Note10 G Note11	Blank -R Note8	-FJ Note13 -FJ5 Note13 -FJ6 Note13 -FM Note13 -FMH Note14		Blank -PP8 -PR8 -PP0 -PR0	Blank -SP Note9 -SR Note9 -SA Note9	DC24V DC12V AC100V Note2 AC120V Note2
BPP (for block-off plate) Note7									

Notes:
5. Valve mounting location is from the left, with the solenoid on top, and the 4(A), 2(B) ports side in front.
6. When selecting **J**, **M**, or **L** (base piping type) for the manifold outlet specification, always enter **-A1** (with plate) for the valve outlet type.
7. Caution should be exercised that the block-off plate wiring is always double wiring (allocated 2 control pins at 1 stn.), regardless of the wiring connection specification. For wiring for a single solenoid, see p. 273.
8. When the valve specification is **T1** or **T2**, the manual override lever is placed only on the A side.
9. Port isolators can be installed only when piping blocks are mounted on both sides. In addition, only 1 port isolator can be mounted in 1 manifold for **-SA,** or 1 each port isolator for **-SP** and **-SR** for a total of 2 locations. When shipping, the designated port isolators are mounted between the designated station and the station to its immediate left (the next smaller stn. No.).
10. Cannot be mounted on the external pilot manifold.
11. Cannot be mounted on the internal pilot manifold.
12. Not available in external pilot type.
13. Can be selected only when the manifold type is **P**.
14. Can be selected only when the manifold type is **PH**.

Parts for manifold

F18 Z - □

Valve size
18: 18 mm
[0.709 in.] width

Parts content
GS2 : Gasket (gasket and exhaust valve)
SP : Port isolator (for 1(P) port)
SR : Port isolator (for 3(R2), 5(R1) ports)
SA : Port isolator (for 1(P), 3(R2), 5(R1) ports)

Block-off plate (block-off plate, 2 mounting screws, and plug)

F18 BP P

Valve size
18: 18 mm
[0.709 in.] width

For plug-in type

Valve base assembly (valve base, gasket, lead wire, and plug-in connector)

F18 Z - □ - □

Valve size
18: 18 mm
[0.709 in.] width

Wiring specification
D: For D-sub connector
F: For flat cable connector, terminal block

Piping specification
VJ : Dual use fitting valve base
VJ5 : Single use ϕ 8 fitting valve base
VJ6 : Single use ϕ 10 fitting valve base
VM : Rc1/4 female thread valve base
VMH : NPT1/4 female thread valve base
VP : Valve base plate

Piping block assembly

F18 Z □ - □

Valve size
18: 18 mm
[0.709 in.] width

Piping specification
PJP : Fitting piping block
PMP : Rc3/8 female thread piping block
PMPH : NPT3/8 female thread piping block

Pilot specification
Blank : Internal pilot
G : External pilot

End blocks (one set of left and right)

F18 Z - EP

Valve size
18: 18 mm
[0.709 in.] width

Wiring block assembly (one set)

F18 Z - □ - □

Valve size
18: 18 mm
[0.709 in.] width

Voltage (Not required for T200)
DC24
DC12
AC100 (for **D250** □, **D251** □, **D370NU** only)

Piping specification
F100 : Flat cable connector (DC specification)
F101 : Flat cable connector (DC specification)
F200 : Flat cable connector (DC specification)
F201 : Flat cable connector (DC specification)
F260 : Flat cable connector (DC specification)
D250 : D-sub connector (M2.6 screws)
D251 : D-sub connector (M2.6 screws)
D250U : D-sub connector (4-40UNC screws)
D251U : D-sub connector (4-40UNC screws)
D370NU : D-sub connector (4-40UNC screws), without power terminal
T200L : Terminal block for left-side mounting
T200R : Terminal block for right-side mounting

Individual air supply and exhaust spacer (Spacer for plug-in type, gasket, exhaust valve, and 2 mounting screws)

F18 Z - □

Valve size
18: 18 mm
[0.709 in.] width

Specification
PP8 : Individual air supply spacer (with ϕ 8 fitting)
PP0 : Individual air supply spacer (with ϕ 10 fitting)
PR8 : Individual exhaust spacer (with ϕ 8 fitting)
PR0 : Individual exhaust spacer (with ϕ 10 fitting)

※ For details, see p. 27.

Muffler

KM - J □

Fitting size
8: Outer diameter ϕ 8 (for individual exhaust spacer)
10: Outer diameter ϕ 10 (for individual exhaust spacer)
12: Outer diameter ϕ 12
(Sales unit: Set of 10 mufflers)

Connecting rod

F18 Z - □ - □

Valve size
18: 18 mm
[0.709 in.] width

Number of additional units
01～20 (01 ～04 for RH)
※ Example: To add 2 valve units, enter **-02**.
※ For reduction of units, consult us.

Specification
RV : For valve base
RH : For piping and wiring base

■ Table for maximum number of valve units by wiring specification

Wiring specification	Max. outputs	Maximum number of units: Wiring connection specification: Packed wiring (**Blank**)	Maximum number of units: Wiring connection specification: Double wiring (**-W**)
F100 Flat cable (10P)	8	Varies depending on the number of mounted single solenoids, double solenoids, and block-off plates. The number of controlled solenoids should be designated as the maximum number of outputs or less. **D370NU** is a maximum of 20 units.	4 units
F101 Flat cable (10P)	8		4 units
F200 Flat cable (20P)	16		8 units
F201 Flat cable (20P)	16		8 units
F260 Flat cable (26P)	20		10 units
D250 □ D-sub connector (25P)	16		8 units
D251 □ D-sub connector (25P)	20		10 units
D370NU D-sub connector (37P)	32		16 units
T200 Terminal block (19 terminals)	18		9 units

Manifold Order Code Example

(12 units of F18 Series)

F18M12PL-JR-F201 DC24V

stn.1～8 F18T0-A1-J5 DC24V
stn.9～11 F18T2-A1-J6 DC24V
stn.12 F18BPP-J6

Precautions for Order Codes

● **Orders for valves only**
Place orders from "F18 Series Single Valve Unit Order Codes" on p. 259.
However, **Blank, A2** □, **F3, F4** □, **F5,** and **F6** cannot be selected for the valve outlet type. For the wiring specification, **Blank** is the only selection.

● **Wiring connection specification**
Blank (packed wiring): Wiring is made in accordance with the mounted valve specifications.
-W (double wiring): Wiring is always for the double solenoid, regardless of the specifications of the mounted valve.

Caution

Caution should be exercised that the block-off plate wiring is always double wiring (allocated 2 control pins at 1 stn.), regardless of the wiring connection specification.
The block-off plate wiring can be made as wiring for a single solenoid. Add **-1W** to the end of the block-off plate order code in the case.
For details, consult us.

F18 Series Serial Transmission Compatible Manifold Order Codes

■ Manifold outlet specification

With dual use fitting blocks (base piping type)

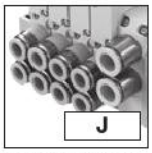

Outlet port fitting
ϕ 8, ϕ10

With selectable fittings (base piping type)

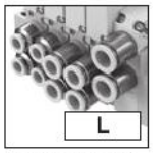

Outlet port should be selected in accordance with the manifold fitting specification.

With female thread blocks (base piping type)

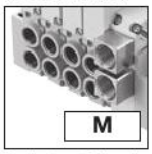

Outlet port female thread
Rc1/4

With plates (direct piping type)

■ Pilot specification

Blank
Internal pilot manifold

G
External pilot manifold

■ Piping block specification (air supply and exhaust)

Fitting block
-JR : Fitting block, right-side mounting[Note12]
-JL : Fitting block, left-side mounting[Note12]
-JD : Fitting block, both-side mounting[Note12]
Fitting size (1(P), 3, 5(R) ports), ϕ12

Female thread block
-MR : Female thread, right-side mounting[Note12]
-ML : Female thread, left-side mounting[Note12]
-MD : Female thread, both-side mounting[Note12]
Female thread size (1(P), 3, 5(R) ports), Rc3/8

Female thread block
-MRH: Female thread, right-side mounting[Note13]
-MLH: Female thread, left-side mounting[Note13]
-MDH: Female thread, both-side mounting[Note13]
Female thread size (1(P), 3, 5(R) ports), NPT3/8

■ Transmission block specification

※ These are the serial transmission block specifications compatible with each system.

● Block photoed on right is compatible with CompoNet.
For details, see p. 41-44.

-31 : For OMRON B7A Link Terminal (standard)
-32 : For OMRON B7A Link Terminal (high speed)
-B1 : For CC-Link (16 outputs)
-H1 : For CompoNet (16 outputs)[Note2]
-D1 : For DeviceNet (16 outputs)[Note2]
-D3 : For DeviceNet (32 outputs)[Note2]
-K1 : For EtherCAT (16 outputs)[Note2]
-K3 : For EtherCAT (32 outputs)[Note2]
-M1 : For EtherNet/IP (16 outputs)[Note2,3]
-M3 : For EtherNet/IP (32 outputs)[Note2,3]

■ Wiring connection specification

Blank
Packed wiring: Wiring is made in accordance with the mounted valve specifications.

-W
Double wiring: Wiring is always for the double solenoid, regardless of the specifications of the mounted valve.

■ Wiring position (transmission block)

Blank : Left-side mounting
-R : Right-side mounting[Note2]

■ Valve size

F18M
18 mm [0.709 in.] width

Valve size	Valve units	Manifold type	Manifold outlet specification	Pilot specification	Piping block specification	Transmission block specification	Wiring connection specification	Wiring position
Manifold model								
Base piping type	F18M	S	J M	Blank G	-JR -MR -JL -ML -JD -MD	-31 -D3[Note2] -32 -K1[Note2] -B1 -K3[Note2] -H1[Note2] -M1[Note2,3] -D1[Note2] -M3[Note2,3]	Blank -W	Blank -R[Note2]
Base piping type selectable fitting	F18M	2 : □ Note1	L	Blank G	-JR[Note12] -MD[Note12] -JL[Note12] -MRH[Note13] -JD[Note12] -MLH[Note13] -MR[Note12] -MDH[Note13] -ML[Note12]	-31 -D3[Note2] -32 -K1[Note2] -B1 -K3[Note2] -H1[Note2] -M1[Note2,3] -D1[Note2] -M3[Note2,3]	Blank -W	Blank -R[Note2]
Direct piping type	F18M	S SH	Blank	Blank G	-JR[Note12] -MD[Note12] -JL[Note12] -MRH[Note13] -JD[Note12] -MLH[Note13] -MR[Note12] -MDH[Note13] -ML[Note12]	-31 -D3[Note2] -32 -K1[Note2] -B1 -K3[Note2] -H1[Note2] -M1[Note2,3] -D1[Note2] -M3[Note2,3]	Blank -W	Blank -R[Note2]

Notes: 1. To determine the maximum number of units, see the table for maximum number of valve units by transmission block specification, on p. 276.
2. The **-H1**, **-D1**, **-D3**, **-K1**, **-K3**, **-M1**, or **-M3**, transmission block is mountable on the left side only.
3. Complies with the CE marking regulation.

Valve specification

T0 : 2-position, for single solenoid only
T1 : 2-position, single solenoid specification
T2 : 2-position, double solenoid specification
T3 : 3-position, closed center
T4 : 3-position, exhaust center
T5 : 3-position, pressure center

Valve outlet type

-A1 With plate Note5 (base piping type)

-FJ With dual use ϕ8, ϕ10 fitting block Note12 (direct piping type)

-FJ5 With single use ϕ8 fitting block Note12 (direct piping type)

-FJ6 With single use ϕ10 fitting block Note12 (direct piping type)

-FM With Rc1/4 female thread block Note12 (direct piping type)

-FMH With NPT1/4 female thread block Note12 (direct piping type)

Manifold fitting specification

-J5 With single use ϕ8 fitting block Note12 (base piping type)

-J6 With single use ϕ10 fitting block Note12 (base piping type)

-MH With NPT1/4 female thread block Note13 (base piping type)

Port isolator

Blank : No port isolator
-SP : For 1(P) port Note8
-SR : For 3(R2), 5(R1) ports Note8
-SA : For 1(P), 3(R2), 5(R1) ports Note8

Operation type

Blank
Internal pilot type Note9

G
External pilot type Note10 (for positive pressure)
※ No vacuum valve can be mounted.

Manual override

Manual override button

Manual override lever Note7

Individual air supply and exhaust spacer

Blank : No spacer
-PP8 : Individual air supply spacer (with ϕ8 fitting)
-PP0 : Individual air supply spacer (with ϕ10 fitting)
-PR8 : Individual exhaust spacer (with ϕ8 fitting)
-PR0 : Individual exhaust spacer (with ϕ10 fitting)
For details, see p. 27.

Station	Valve size	Valve specification	Operation type	Manual override	Valve outlet type	Manifold fitting specification	Individual air supply and exhaust spacer	Port isolator	Voltage
Mounting valve model									
stn. 1 ⋮ stn.□ Note4	F18 F18L	T0 T1 T2 T3 T4 T5 TA Note11 TB Note11 TC Note11	Blank Note9 G Note10	Blank -R Note7	-A1 Note5		Blank -PP8 -PR8 -PP0 -PR0	Blank -SP Note8 -SR Note8 -SA Note8	DC24V
		BPP (for block-off plate) Note6							
stn. 1 ⋮ stn.□ Note4	F18 F18L	T0 T1 T2 T3 T4 T5 TA Note11 TB Note11 TC Note11	Blank Note9 G Note10	Blank -R Note7	-A1 Note5	-J5 Note12 -J6 Note12 -MH Note13	Blank -PP8 -PR8 -PP0 -PR0	Blank -SP Note8 -SR Note8 -SA Note8	DC24V
		BPP (for block-off plate) Note6							
stn. 1 ⋮ stn.□ Note4	F18 F18L	T0 T1 T2 T3 T4 T5 TA Note11 TB Note11 TC Note11	Blank Note9 G Note10	Blank -R Note7	-FJ Note12 -FJ5 Note12 -FJ6 Note12 -FM Note12 -FMH Note13		Blank -PP8 -PR8 -PP0 -PR0	Blank -SP Note8 -SR Note8 -SA Note8	DC24V
		BPP (for block-off plate) Note6							

Notes:
4. Valve mounting location is from the left, with the solenoid on top, and the 4(A), 2(B) ports side in front.
5. When selecting **J**, **M**, or **L** (base piping type) for the manifold outlet specifications, always enter **-A1** (with plate) for the valve outlet type.
6. Caution should be exercised that the block-off plate wiring is always double wiring (allocated 2 control pins at 1 stn.), regardless of the wiring connection specification. For wiring for a single solenoid, see p. 250.
7. When the valve specification is **T1** or **T2**, the manual override lever is placed only on the A side.
8. Port isolators can be installed only when piping blocks are mounted on both sides. In addition, only 1 port isolator can be mounted in 1 manifold for **-SA**, or 1 each port isolator for **-SP** and **-SR** for a total of 2 locations. When shipping, the designated port isolators are mounted between the designated station and the station to its immediate left (the next smaller stn. No.).
9. Cannot be mounted on the external pilot manifold.
10. Cannot be mounted on the internal pilot manifold.
11. Not available in external pilot type.
12. Can be selected only when the manifold type is **S**.
13. Can be selected only when the manifold type is **SH**.

Parts for manifold

F18 Z - □

Valve size
18 : 18 mm
[0.709 in.] width

Parts content
GS2 : Gasket (gasket and exhaust valve)

Block-off plate (block-off plate, 2 mounting screws, and plug)

F18 BPP

Valve size
18: 18 mm
[0.709 in.] width

Individual air supply and exhaust spacer (Spacer for plug-in type, gasket, exhaust valve, and 2 mounting screws)

F18 Z - □

Valve size
18: 18 mm
[0.709 in.] width

Specification
PP8 : Individual air supply spacer (with ϕ8 fitting)
PP0 : Individual air supply spacer (with ϕ10 fitting)
PR8 : Individual exhaust spacer (with ϕ8 fitting)
PR0 : Individual exhaust spacer (with ϕ10 fitting)

※ For details, see p. 27.

Muffler

KM - J□

Fitting size
8 : Outer diameter ϕ8 (for individual exhaust spacer)
10 : Outer diameter ϕ10 (for individual exhaust spacer)
12 : Outer diameter ϕ12
(Sales unit: Set of 10 mufflers)

Serial transmission block (single unit)

YS2 □□

Wiring position
S : For integrated type, left-side mounting
T : For integrated type, right-side mounting

Transmission block specification
31 : For OMRON B7A Link Terminal (standard)
32 : For OMRON B7A Link Terminal (high speed)
A1 : For OMRON CompoBus/S (16 outputs)
B1 : For CC-Link (16 outputs)

YS5H1U — For CompoNet (16 outputs)
※ DIN rail included (length 75 mm [2.95 in.])

YS6 □ (Dedicated for manifold mounting)

Transmission block specification
D1 : For DeviceNet (16 outputs)
D3 : For DeviceNet (32 outputs)

Note: The same wiring position is used for both the left-side and the right-side.

YS7 □ L (Dedicated for manifold mounting)

Wiring position
L : For left-side mounting

Transmission block specification
K1 : For EtherCAT (16 outputs)
K3 : For EtherCAT (32 outputs)
M1 : For EtherNet/IP (16 outputs)
M3 : For EtherNet/IP (32 outputs)

■ Table for maximum number of valve units by transmission block specification

Transmission block specifications	Max. outputs	Maximum number of units: Wiring connection specification: Packed wiring (**Blank**)	Maximum number of units: Wiring connection specification: Double wiring (**-W**)
-31 : For OMRON B7A Link Terminal (standard)	16	Varies depending on the number of mounted single solenoids, double solenoids, and block-off plates. The number of controlled solenoids should be designated as the maximum number of outputs or less.	8 units
-32 : For OMRON B7A Link Terminal (high speed)	16		8 units
-B1 : For CC-LINK (16 Outputs)	16		8 units
-H1 : For CompoNet (16 Outputs)	16		8 units
-D1 : For DeviceNet (16 Outputs)	16		8 units
-D3 : For DeviceNet (32 Outputs)	32		16 units
-K1 : For EtherCAT (16 Outputs)	16		8 units
-K3 : For EtherCAT (32 Outputs)	32		16 units
-M1: For EtherNet/IP (16 Outputs)	16		8 units
-M3: For EtherNet/IP (32 Outputs)	32		16 units

Manifold Order Code Example

(8 units of F18 Series)

F18M8SL-JR-B1-W

stn.1～5 F18T0-A1-J5 DC24V
stn.6～7 F18T2-A1-J6 DC24V
stn.8 F18BPP-J6

Precautions for Order Codes

● **Orders for valves only**
Place orders from "F18 Series Single Valve Unit Order Codes" on p. 259.
However, **Blank, A2** □, **F3, F4** □, **F5,** and **F6,** cannot be selected for the valve outlet type. For the wiring specification, **Blank** is the only selection.

● **Wiring connection specification**
Blank (packed wiring): Wiring is made in accordance with the mounted valve specifications.
-W (double wiring): Wiring is always for the double solenoid, regardless of the specifications of the mounted valve.

Caution

Caution should be exercised that the block-off plate wiring is always double wiring (allocated 2 control pins at 1 stn.), regardless of the wiring connection specification. The block-off plate wiring can be made as wiring for a single solenoid. Add **-1W** to the end of the block-off plate order code in the case. For details, consult us.

F18T Valve specifications -F3-PS

With outlet port dual use fitting block
With inlet port female thread block
S type plug connector

* For T0 Type dimensions, see page 279.

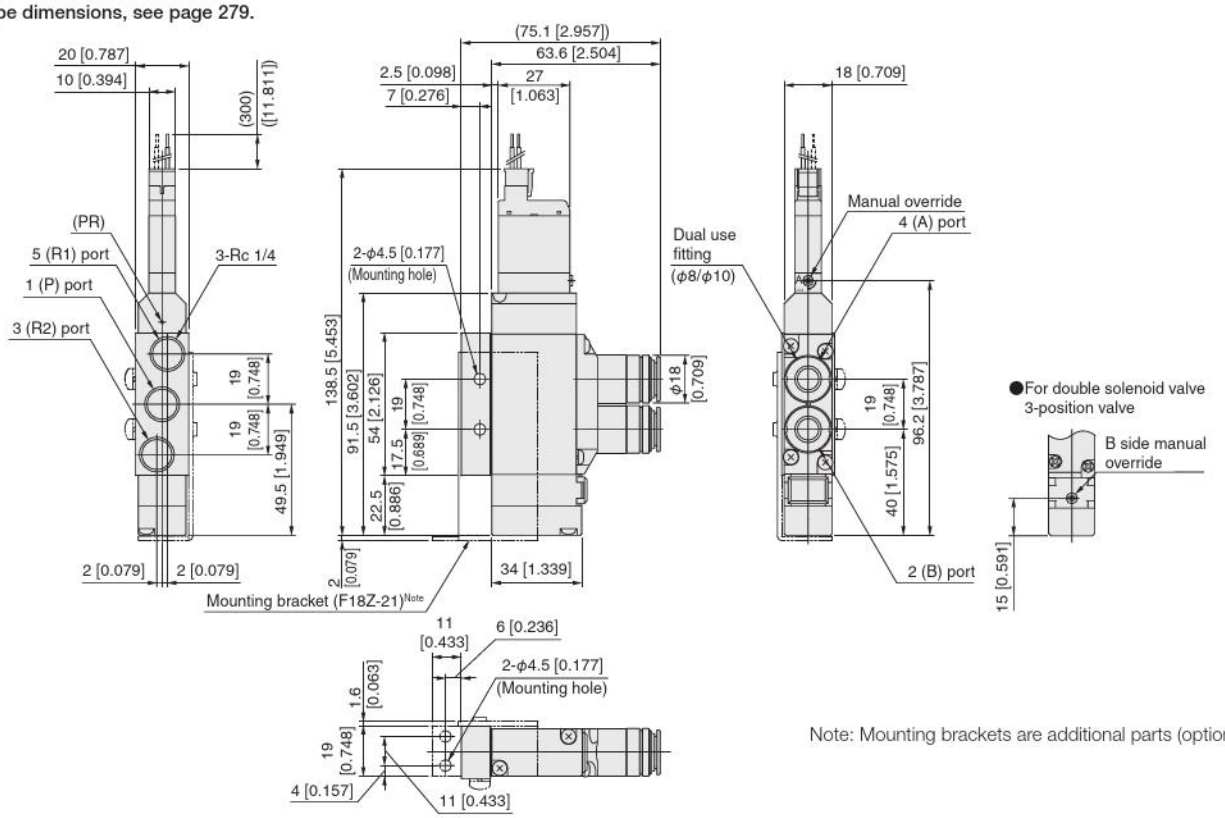

Note: Mounting brackets are additional parts (options).

F18T Valve specifications -F4-PS
F18T Valve specifications -F4H-PS

With outlet port female thread block
With inlet port female thread block
S type plug connector

* For T0 Type dimensions, see page 279.

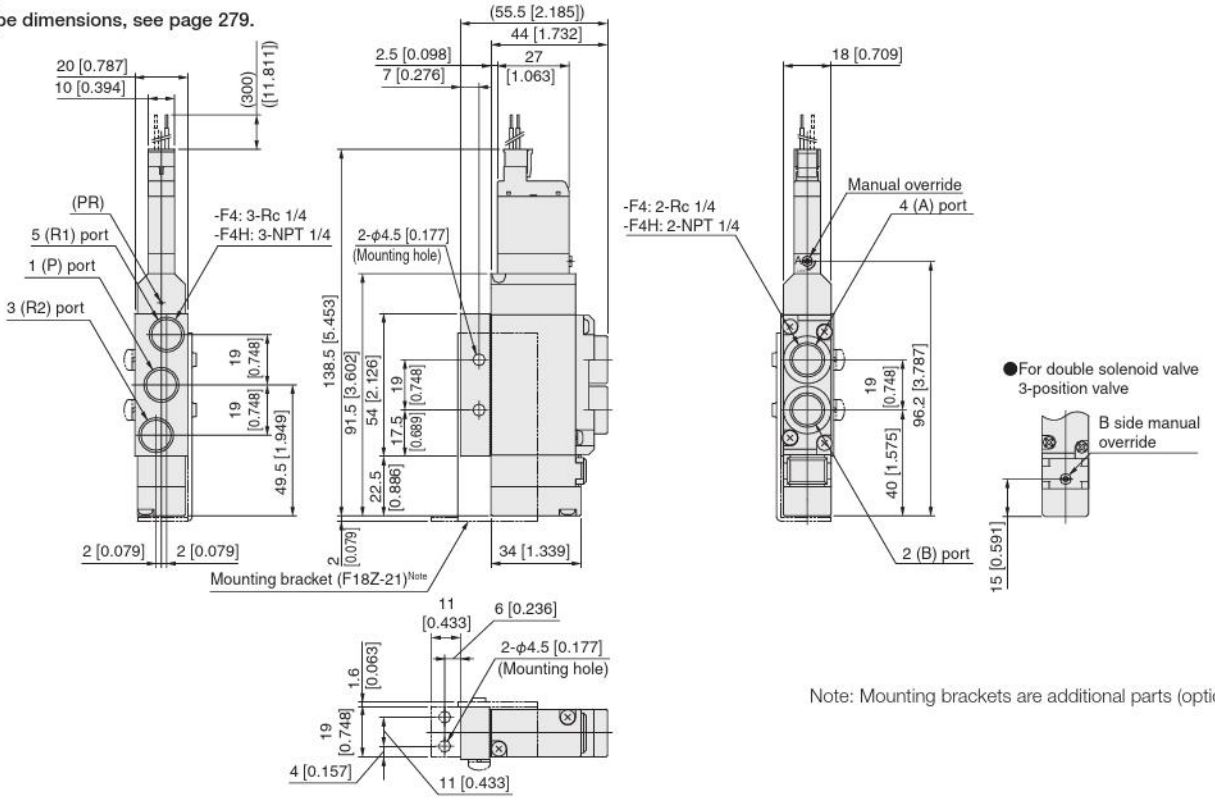

Note: Mounting brackets are additional parts (options).

F18T0-F □ -PS

With outlet port single use fitting block
With inlet port female thread block
S type plug connector

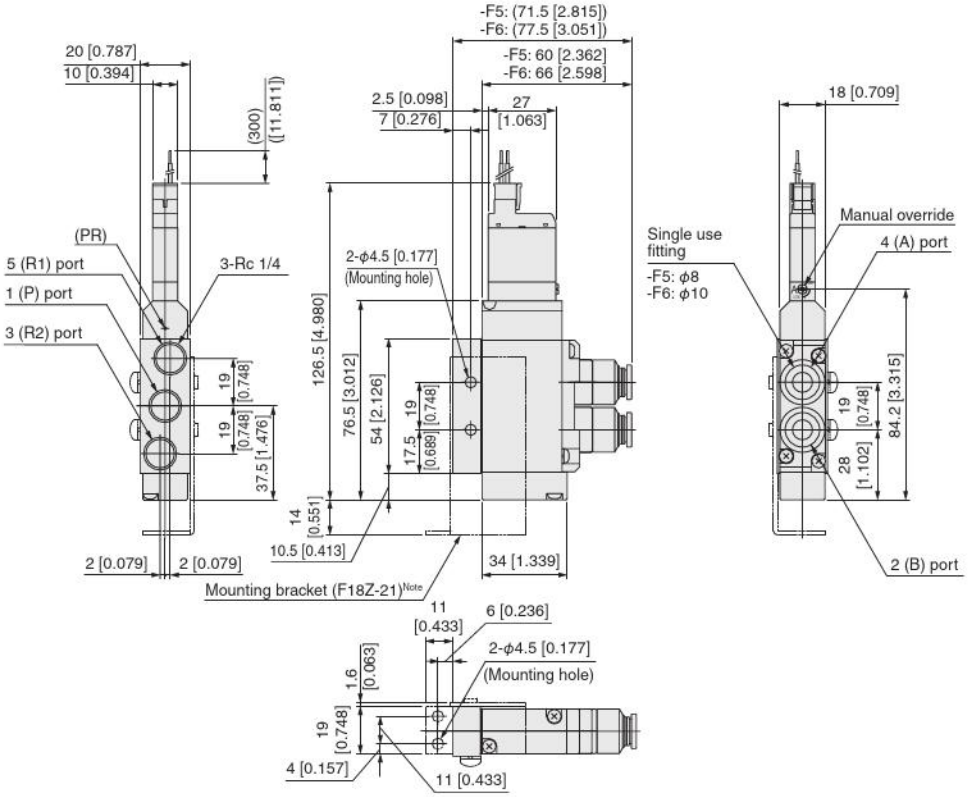

Note: Mounting brackets are additional parts (options).

IP type

F18T Valve specifications Operation system -P-A2-PS

●L type plug connector: **-PL**

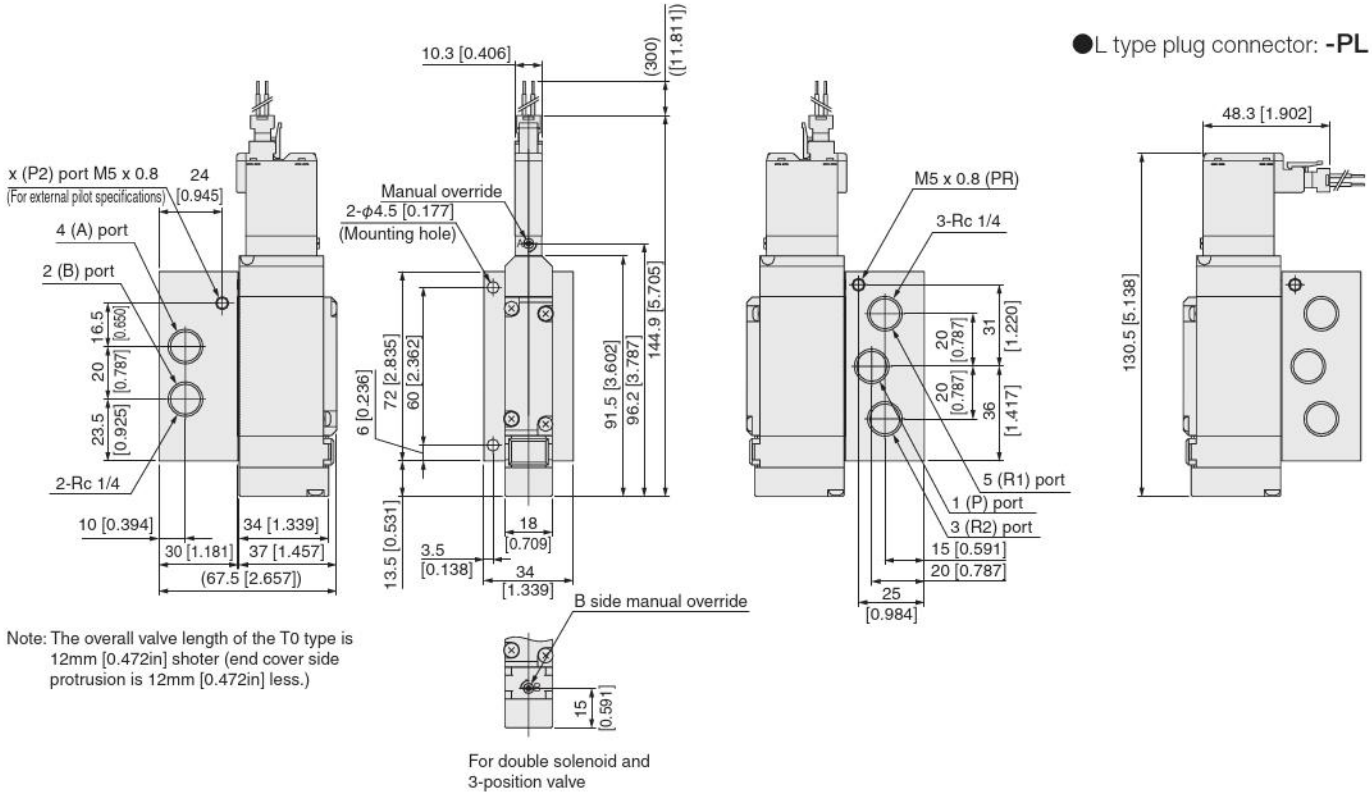

Note: The overall valve length of the T0 type is 12mm [0.472in] shoter (end cover side protrusion is 12mm [0.472in] less.)

For double solenoid and 3-position valve

F18T Valve specifications Operation system -A2-PS

With A-type sub-base
S type plug connector

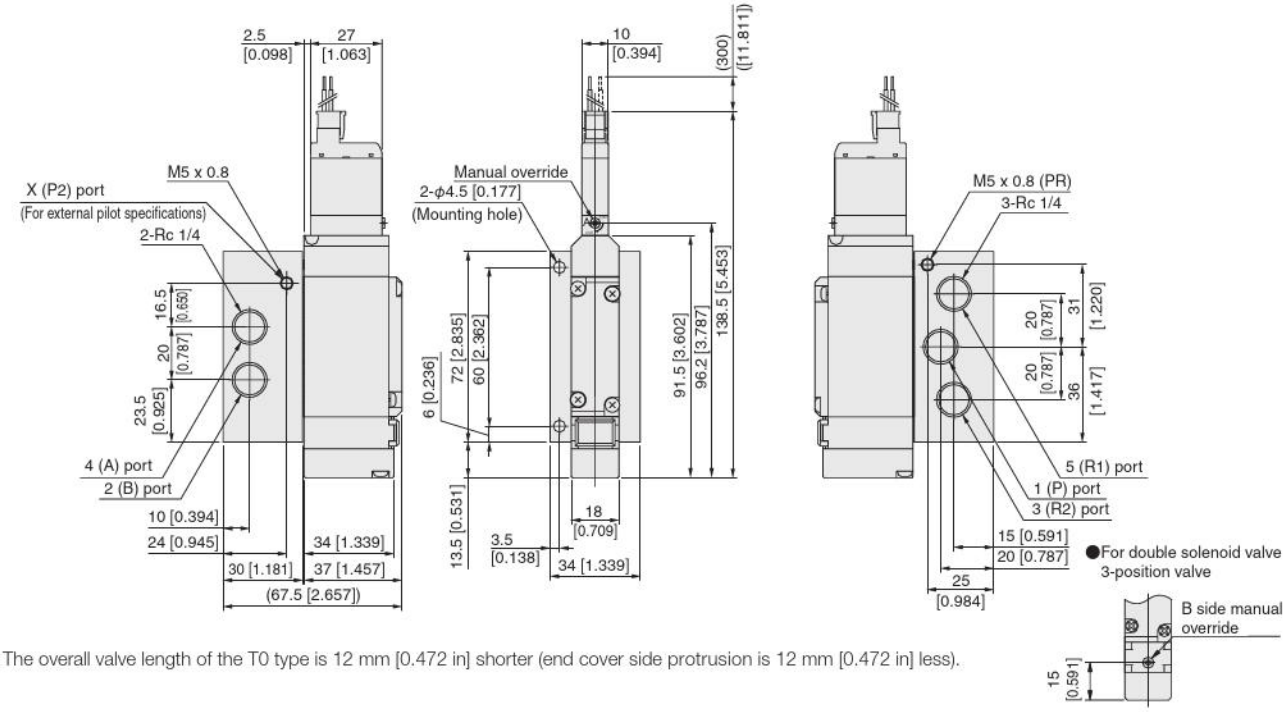

Note: The overall valve length of the T0 type is 12 mm [0.472 in] shorter (end cover side protrusion is 12 mm [0.472 in] less).

Options

●L type plug connector: **-PL**

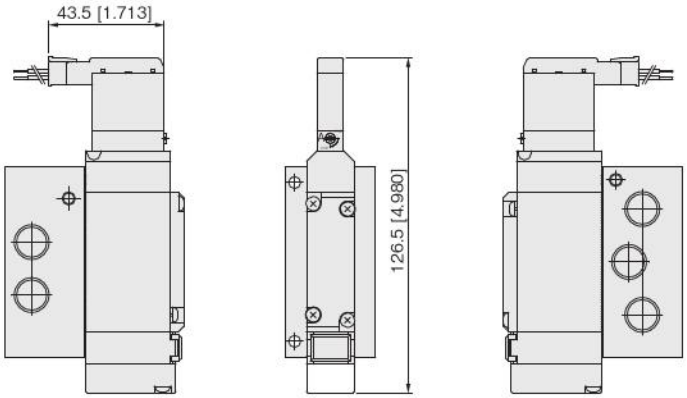

Note: The overall valve length of the T0 type is 12 mm [0.472 in] shorter
(end cover side protrusion is 12 mm [0.472 in] less).

●Manual lever: **-R**

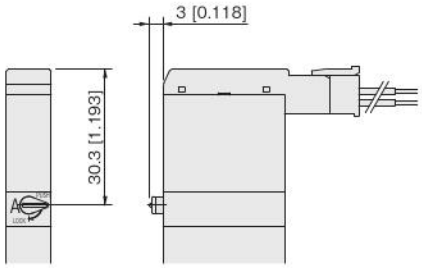

●Solenoid with DIN type connector: **-39□**

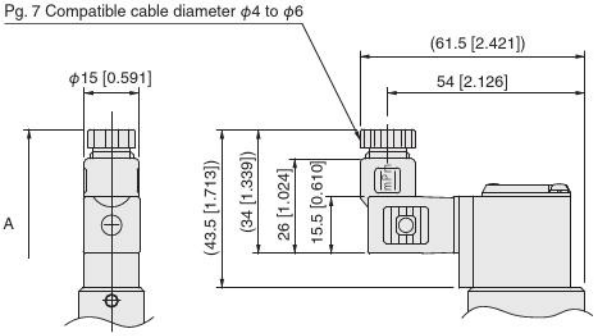

Model \ Symbol	A (Full length)
F18T0	127.7 [5.028]
F18T2	180.4 [7.102]
F18T2 to T5	192.4 [7.575]

●Protruding locking type manual override: **-83**

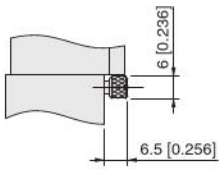

F18M Number of valves A J/M/L Pilot specifications (Base piping type)

Monoblock manifold A type
With manifold outlet port dual use fitting block
S type plug connector

● Internal pilot specifications

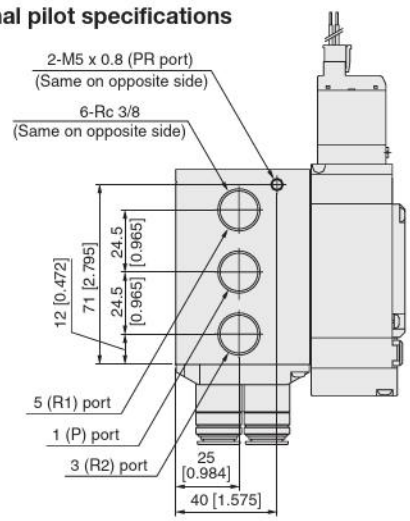

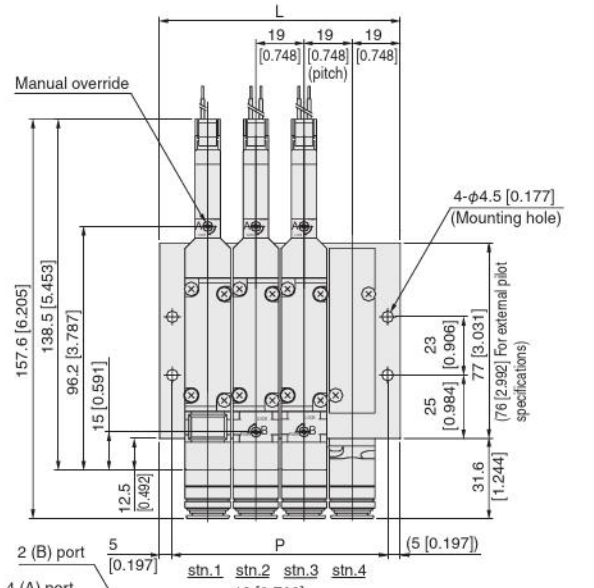

● External pilot specifications[Note]

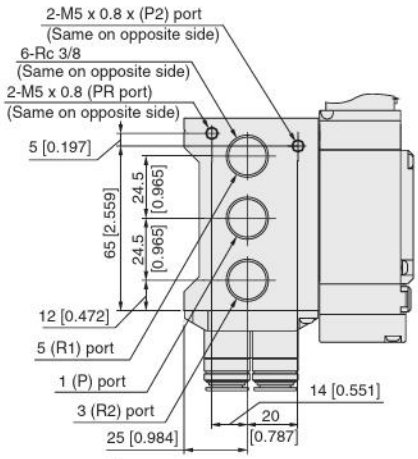

Note: For external pilot specifications, the shape of the monoblock manifold A type body is different from the internal pilot specifications

Unit dimensions

Number of units	L	P
2	57 [2.244]	47 [1.850]
3	76 [2.992]	66 [2.598]
4	95 [3.740]	85 [3.346]
5	114 [4.488]	104 [4.094]
6	133 [5.236]	123 [4.843]
7	152 [5.984]	142 [5.591]
8	171 [6.732]	161 [6.339]
9	190 [7.480]	180 [7.087]
10	209 [8.228]	199 [7.835]
11	228 [8.976]	218 [8.583]
12	247 [9.724]	237 [9.331]
13	266 [10.472]	256 [10.079]
14	285 [11.220]	275 [10.827]
15	304 [11.969]	294 [11.575]
16	323 [12.717]	313 [12.323]
17	342 [13.465]	332 [13.071]
18	361 [14.213]	351 [13.819]
19	380 [14.961]	370 [14.567]
20	399 [15.709]	389 [15.315]

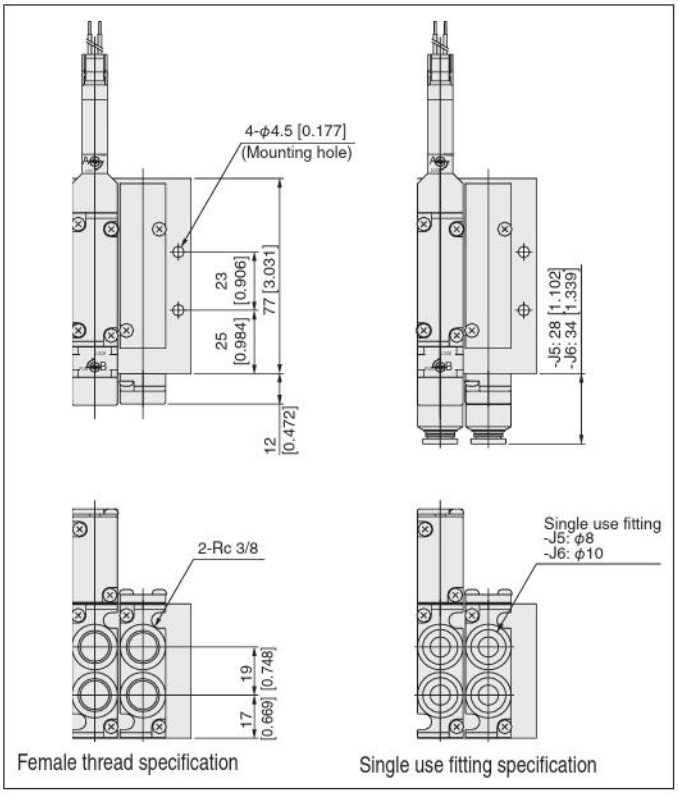

F18M Number of valves F (Direct piping type)

Monoblock manifold F type
With valve outlet port dual use fitting block
S type plug connector

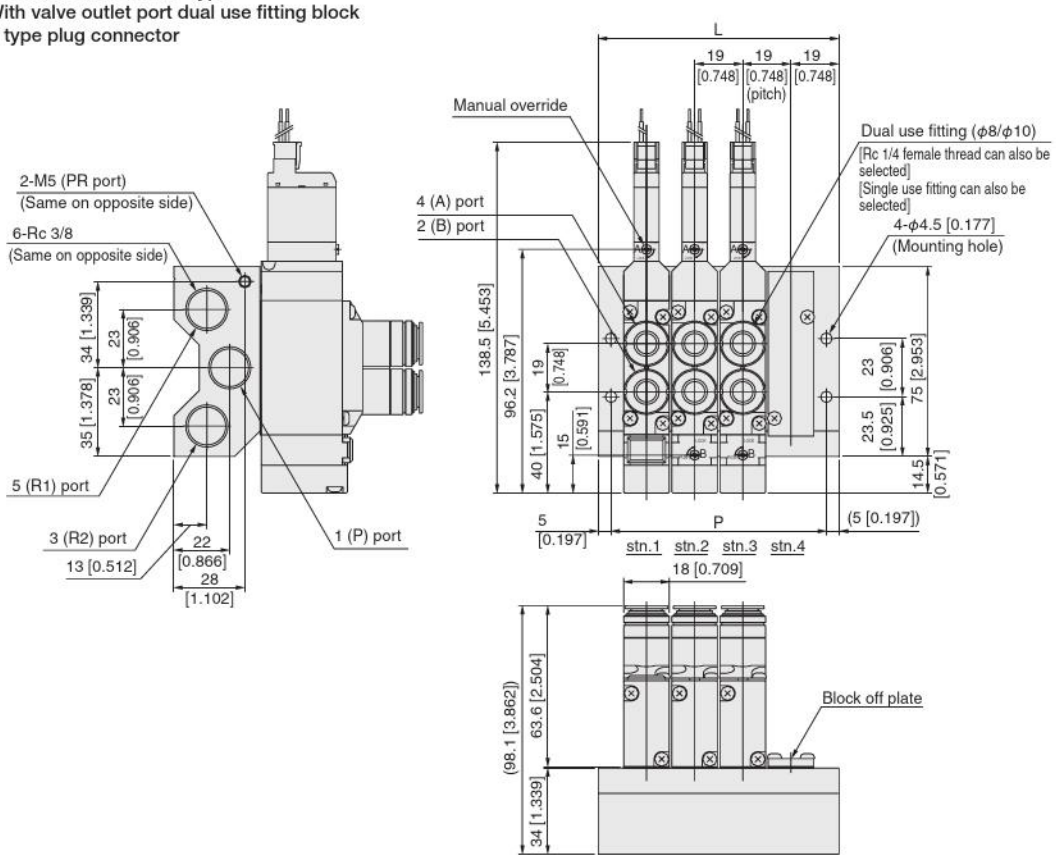

Note: The overall valve length of the T0 type is 12 mm [0.472 in] shorter (end cover side protrusion is 12 mm [0.472 in] less).

Unit dimensions

Number of units	L	P
2	57 [2.244]	47 [1.850]
3	76 [2.992]	66 [2.598]
4	95 [3.740]	85 [3.346]
5	114 [4.488]	104 [4.094]
6	133 [5.236]	123 [4.843]
7	152 [5.984]	142 [5.591]
8	171 [6.732]	161 [6.339]
9	190 [7.480]	180 [7.087]
10	209 [8.228]	199 [7.835]
11	228 [8.976]	218 [8.583]
12	247 [9.724]	237 [9.331]
13	266 [10.472]	256 [10.079]
14	285 [11.220]	275 [10.827]
15	304 [11.969]	294 [11.575]
16	323 [12.717]	313 [12.323]
17	342 [13.465]	332 [13.071]
18	361 [14.213]	351 [13.819]
19	380 [14.961]	370 [14.567]
20	399 [15.709]	389 [15.315]

F18M Number of valves N J M L Pilot specifications (Base piping type)

With manifold outlet port dual use fitting block
S type plug connector

※See the bottom of page 286 for the dimensions of the F18M□NM/NL.

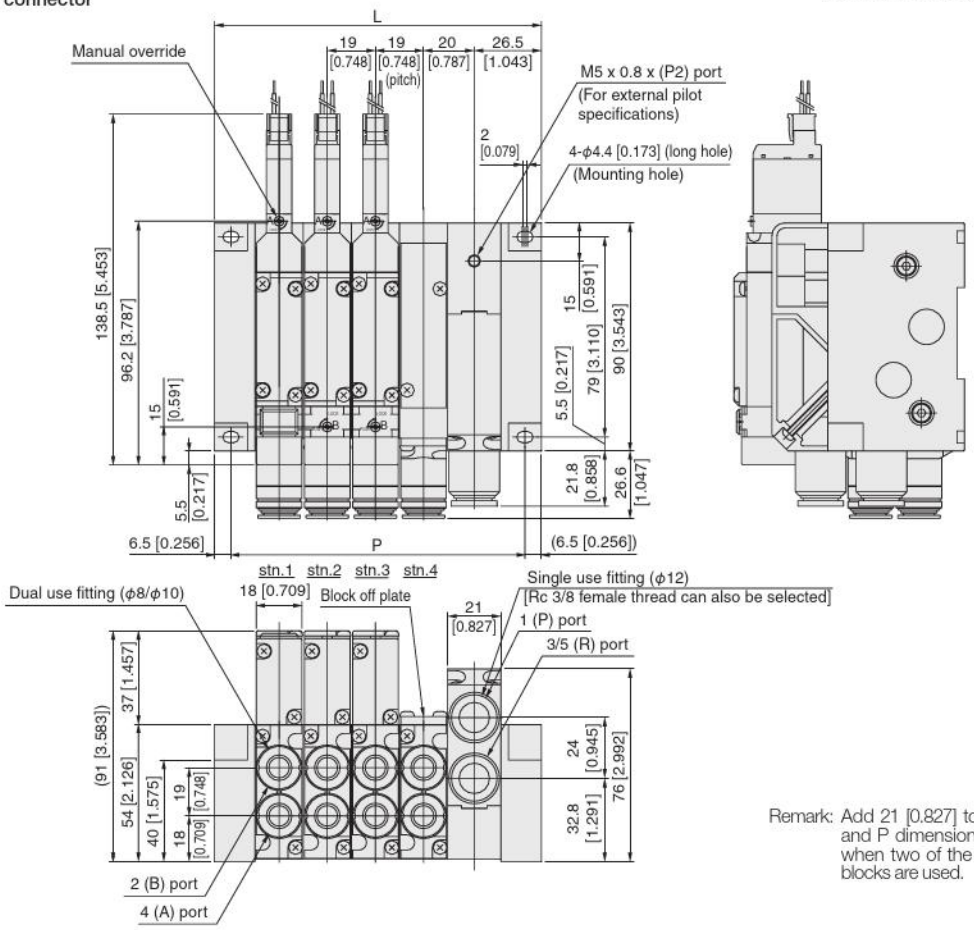

Remark: Add 21 [0.827] to the L and P dimensions right when two of the piping blocks are used.

Unit dimensions

Number of units	L	P
2	91 [3.583]	78 [3.071]
3	110 [4.331]	97 [3.819]
4	129 [5.079]	116 [4.567]
5	148 [5.827]	135 [5.315]
6	167 [6.575]	154 [6.063]
7	186 [7.323]	173 [6.811]
8	205 [8.071]	192 [7.559]
9	224 [8.819]	211 [8.307]
10	243 [9.567]	230 [9.055]
11	262 [10.315]	249 [9.803]
12	281 [11.063]	268 [10.551]
13	300 [11.811]	287 [11.299]
14	319 [12.559]	306 [12.047]
15	338 [13.307]	325 [12.795]
16	357 [14.055]	344 [13.543]
17	376 [14.803]	363 [14.291]
18	395 [15.551]	382 [15.039]
19	414 [16.299]	401 [15.787]
20	433 [17.047]	420 [16.535]

F18M Number of valves N Pilot specifications (Direct piping type)

With valve outlet port dual use fitting block
S type plug connector

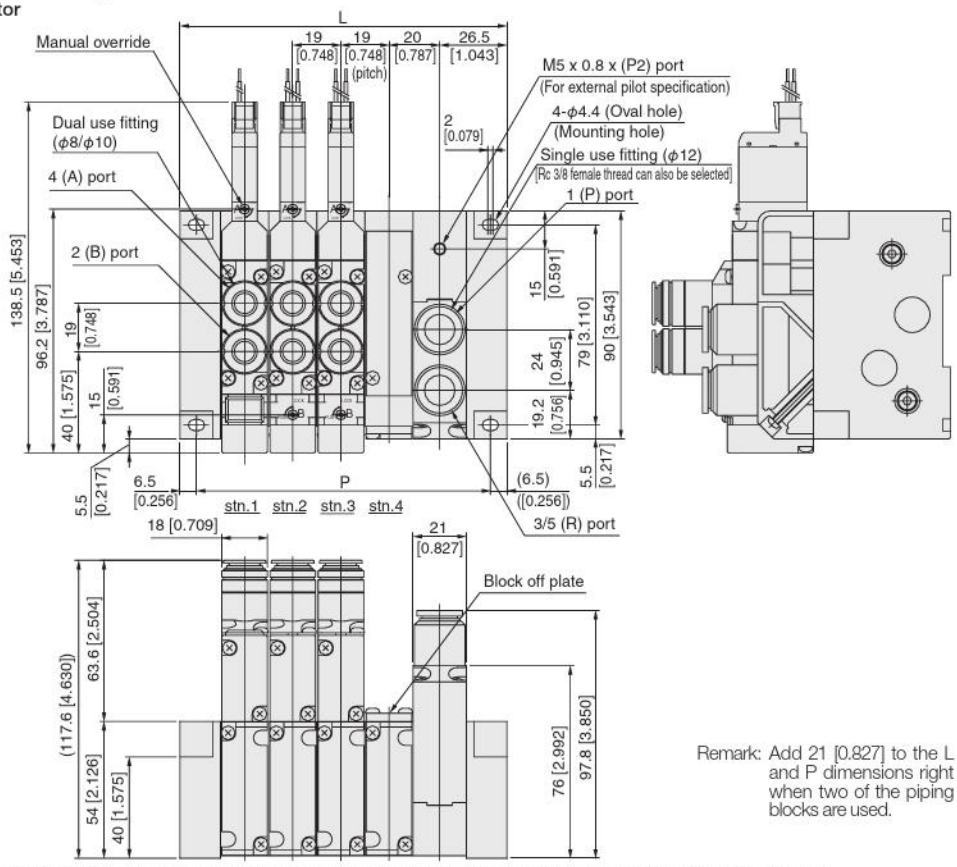

Remark: Add 21 [0.827] to the L and P dimensions right when two of the piping blocks are used.

Unit dimensions

Number of units	L	P
2	91 [3.583]	78 [3.071]
3	110 [4.331]	97 [3.819]
4	129 [5.079]	116 [4.567]
5	148 [5.827]	135 [5.315]
6	167 [6.575]	154 [6.063]
7	186 [7.323]	173 [6.811]
8	205 [8.071]	192 [7.559]
9	224 [8.819]	211 [8.307]
10	243 [9.567]	230 [9.055]
11	262 [10.315]	249 [9.803]
12	281 [11.063]	268 [10.551]
13	300 [11.811]	287 [11.299]
14	319 [12.559]	306 [12.047]
15	338 [13.307]	325 [12.795]
16	357 [14.055]	344 [13.543]
17	376 [14.803]	363 [14.291]
18	395 [15.551]	382 [15.039]
19	414 [16.299]	401 [15.787]
20	433 [17.047]	420 [16.535]

Note: The overall valve length of the T0 type is 12 mm [0.472 in] shorter (end cover side protrusion is 12 mm [0.472 in] less).

F18M Number of valves P J/M/L Pilot specifications (Base piping type)

※See the bottom of page 286 for the dimensions of the F18M□PM/PL.

With manifold outlet port dual use fitting block
Flat cable connector 10-pin specifications

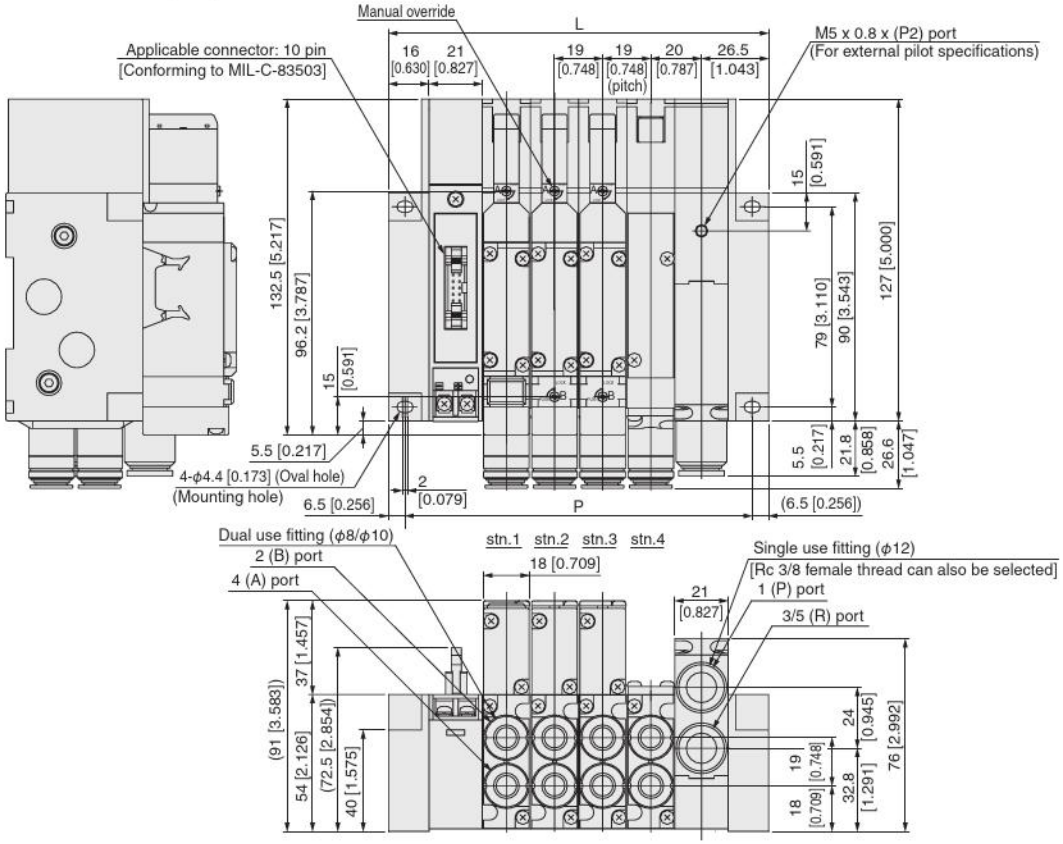

Unit dimensions

Number of units	L	P
2	112 [4.409]	99 [3.898]
3	131 [5.157]	118 [4.646]
4	150 [5.906]	137 [5.394]
5	169 [6.654]	156 [6.142]
6	188 [7.402]	175 [6.890]
7	207 [8.150]	194 [7.638]
8	226 [8.898]	213 [8.386]

Remark: Add 21 [0.827] to the L and P dimensions above when two of the piping blocks are used.

F18M Number of valves P J/M/L Pilot specifications (Base piping type)

※See the bottom of page 286 for the dimensions of the F18M□PM/PL.

With manifold outlet port dual use fitting block
Flat cable connector 20-pin specifications

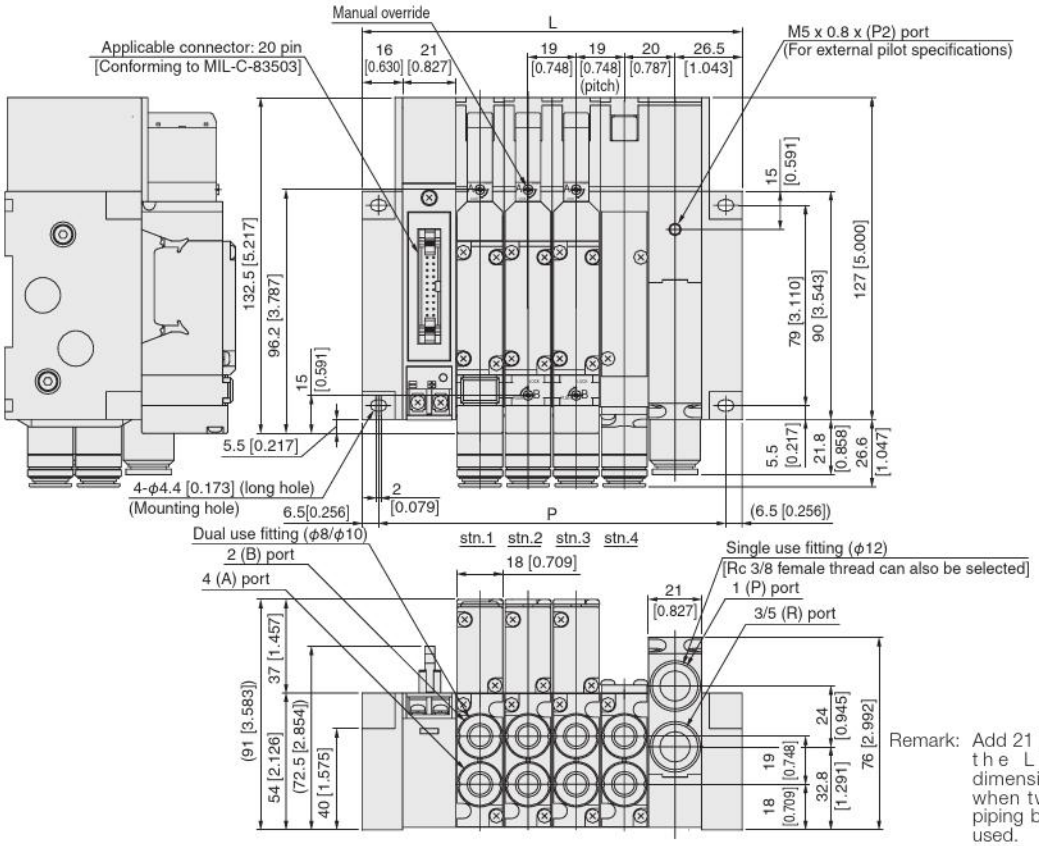

Unit dimensions

Number of units	L	P
2	112 [4.409]	99 [3.898]
3	131 [5.157]	118 [4.646]
4	150 [5.906]	137 [5.394]
5	169 [6.654]	156 [6.142]
6	188 [7.402]	175 [6.890]
7	207 [8.150]	194 [7.638]
8	226 [8.898]	213 [8.386]
9	245 [9.646]	232 [9.134]
10	264 [10.394]	251 [9.882]
11	283 [11.142]	270 [10.630]
12	302 [11.890]	289 [11.378]
13	321 [12.638]	308 [12.126]
14	340 [13.386]	327 [12.874]
15	359 [14.134]	346 [13.622]
16	378 [14.882]	365 [14.370]

Remark: Add 21 [0.827] to the L and P dimensions right when two of the piping blocks are used.

F18M Number of valves P J/M/L Pilot specifications (Base piping type)

※See the bottom of page 286 for the dimensions of the F18M□PM/PL.

With manifold outlet port dual use fitting block
Flat cable connector 26-pin specifications

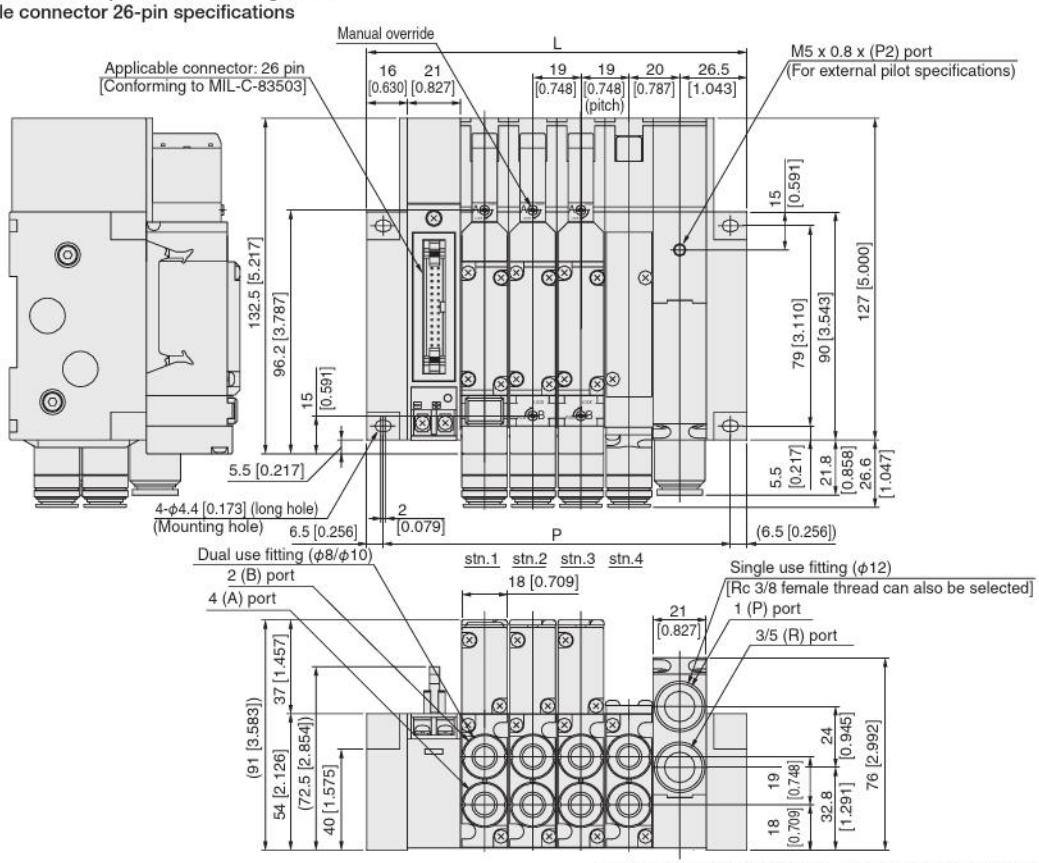

Remark: Add 21 [0.827] to the L and P dimensions right when two of the piping blocks are used.

Unit dimensions

Number of units	L	P
2	112 [4.409]	99 [3.898]
3	131 [5.157]	118 [4.646]
4	150 [5.906]	137 [5.394]
5	169 [6.654]	156 [6.142]
6	188 [7.402]	175 [6.890]
7	207 [8.150]	194 [7.638]
8	226 [8.898]	213 [8.386]
9	245 [9.646]	232 [9.134]
10	264 [10.394]	251 [9.882]
11	283 [11.142]	270 [10.630]
12	302 [11.890]	289 [11.378]
13	321 [12.638]	308 [12.126]
14	340 [13.386]	327 [12.874]
15	359 [14.134]	346 [13.622]
16	378 [14.882]	365 [14.370]
17	397 [15.630]	384 [15.118]
18	416 [16.378]	403 [15.866]
19	435 [17.126]	422 [16.614]
20	454 [17.874]	441 [17.362]

F18M Number of valves P J/M/L Pilot specifications (Base piping type)

※See the bottom of p286 for the dimensions of the F18M□PM/PL.

With manifold outlet port dual use fitting block
D-sub connector 25-pin specifications

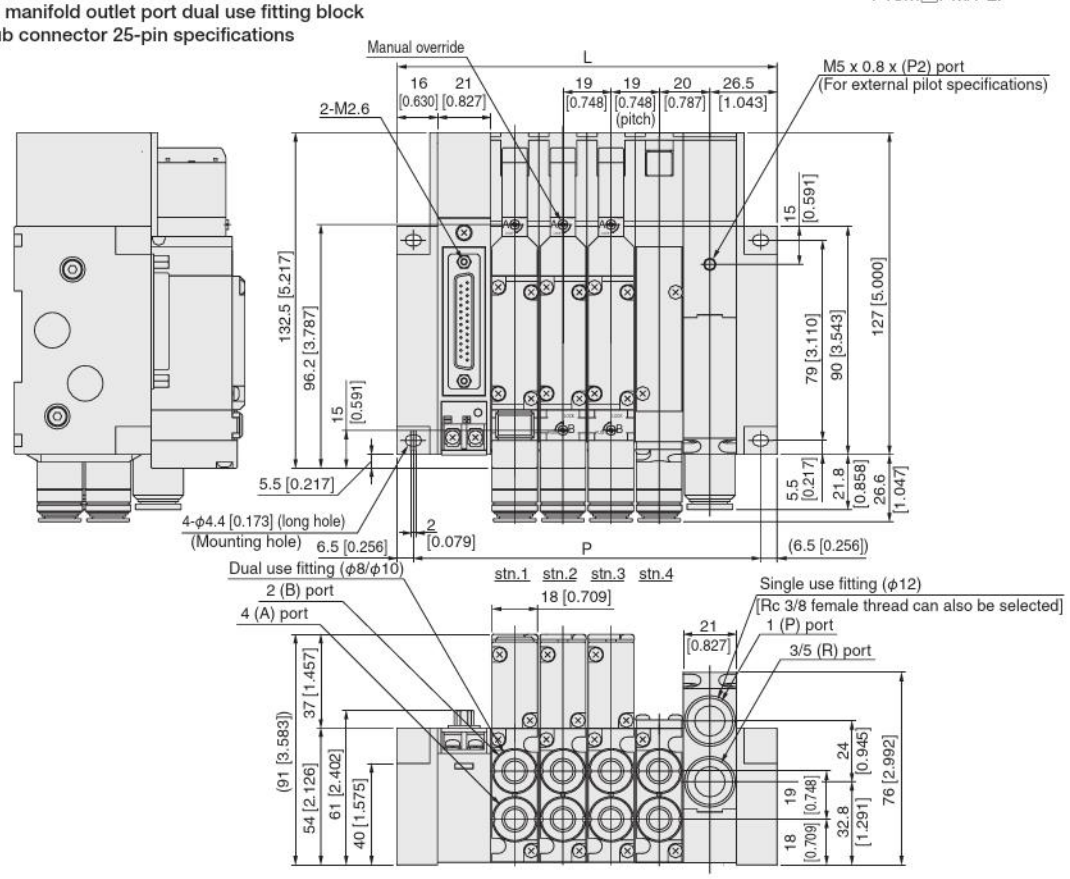

Remark: Add 21 [0.827] to the L and P dimensions right when two of the piping blocks are used.

Unit dimensions

Number of units	L	P
2	112 [4.409]	99 [3.898]
3	131 [5.157]	118 [4.646]
4	150 [5.906]	137 [5.394]
5	169 [6.654]	156 [6.142]
6	188 [7.402]	175 [6.890]
7	207 [8.150]	194 [7.638]
8	226 [8.898]	213 [8.386]
9	245 [9.646]	232 [9.134]
10	264 [10.394]	251 [9.882]
11	283 [11.142]	270 [10.630]
12	302 [11.890]	289 [11.378]
13	321 [12.638]	308 [12.126]
14	340 [13.386]	327 [12.874]
15	359 [14.134]	346 [13.622]
16	378 [14.882]	365 [14.370]
17	397 [15.630]	384 [15.118]
18	416 [16.378]	403 [15.866]
19	435 [17.126]	422 [16.614]
20	454 [17.874]	441 [17.362]

F18M Number of valves P J/M/L Pilot specifications (Base piping type)

With manifold outlet port dual use fitting block
Terminal block type

※See the bottom of p.286 for the dimensions of the F18M□PM/PL.

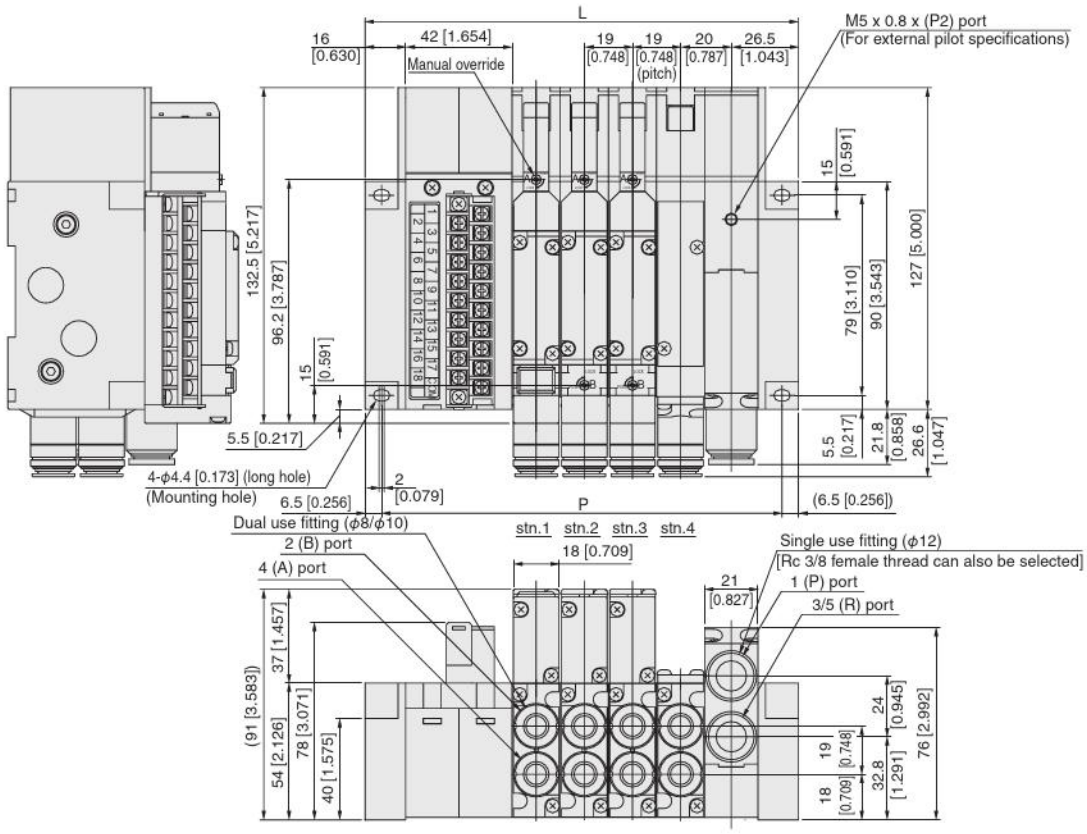

Unit dimensions

Number of units	L	P
2	133 [5.236]	120 [4.724]
3	152 [5.984]	139 [5.472]
4	171 [6.732]	158 [6.220]
5	190 [7.480]	177 [6.969]
6	209 [8.228]	196 [7.717]
7	228 [8.976]	215 [8.465]
8	247 [9.724]	234 [9.213]
9	266 [10.472]	253 [9.961]
10	285 [11.220]	272 [10.709]
11	304 [11.969]	291 [11.457]
12	323 [12.717]	310 [12.205]
13	342 [13.465]	329 [12.953]
14	361 [14.213]	348 [13.701]
15	380 [14.961]	367 [14.449]
16	399 [15.709]	386 [15.197]
17	418 [16.457]	405 [15.945]
18	437 [17.205]	424 [16.693]

Remark: Add 21 [0.827] to the L and P dimensions above when two of the piping blocks are used.

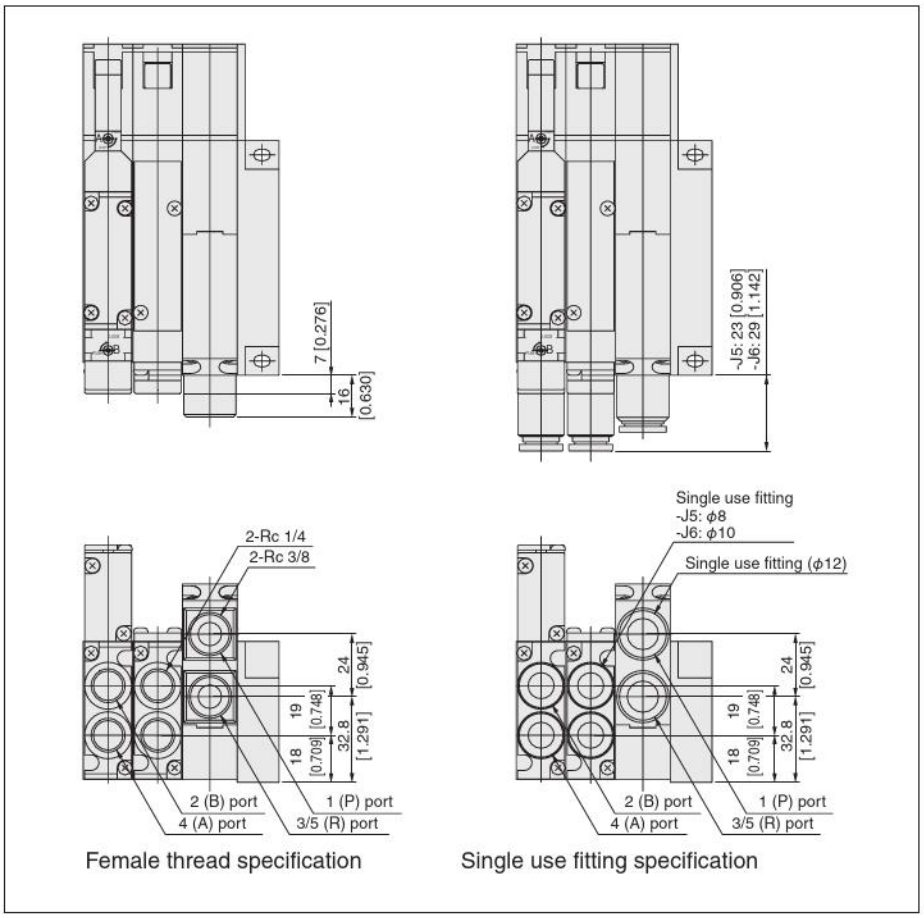

Omron B7A, SandCC-Link supported

F18M Number of valves S J/M/L Pilot specifications (Base piping type)

※See the bottom of p.286 for the dimensions of the F18M□SM/SL.

With manifold outlet port dual use fitting block

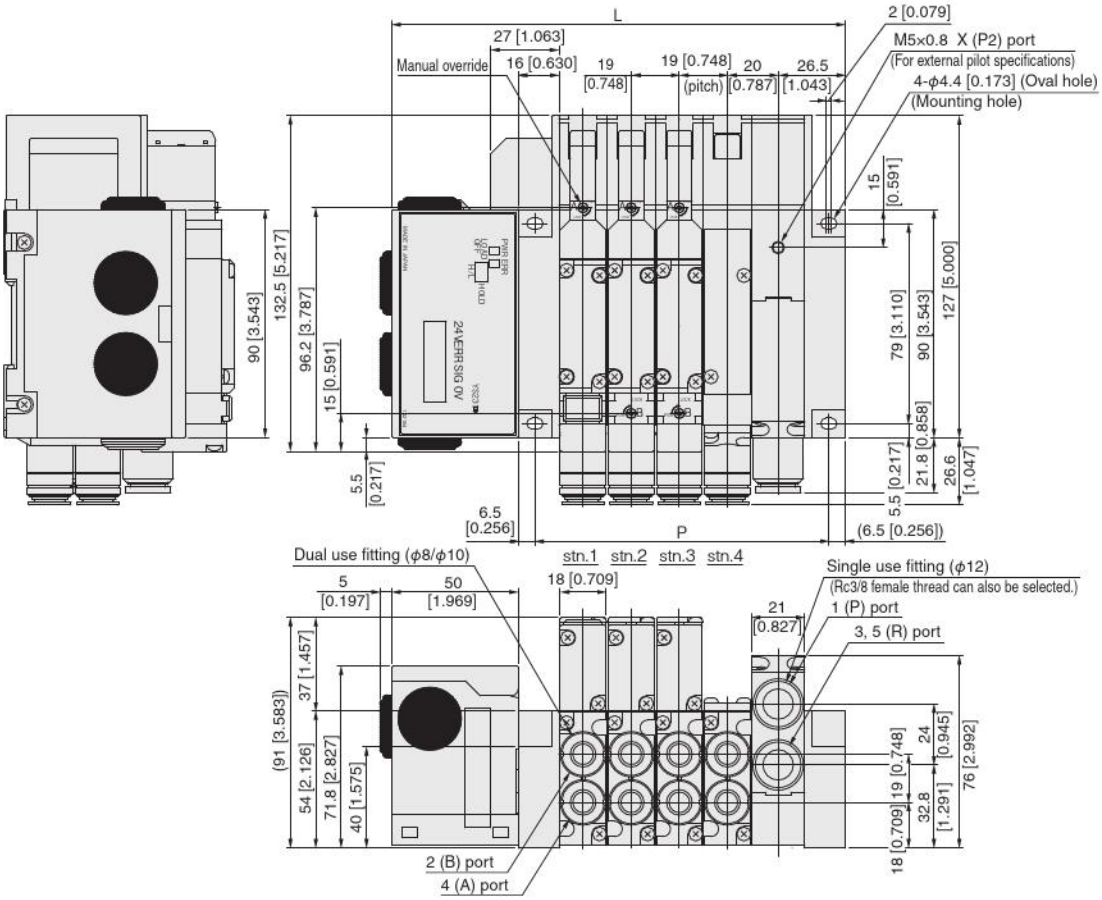

CompoNet supported

F18M Number of valves S J/M/L Pilot specifications (Base piping type)

※See the bottom of p.286 for the dimensions of the F18M□PM/PL.

With manifold outlet port dual use fitting block

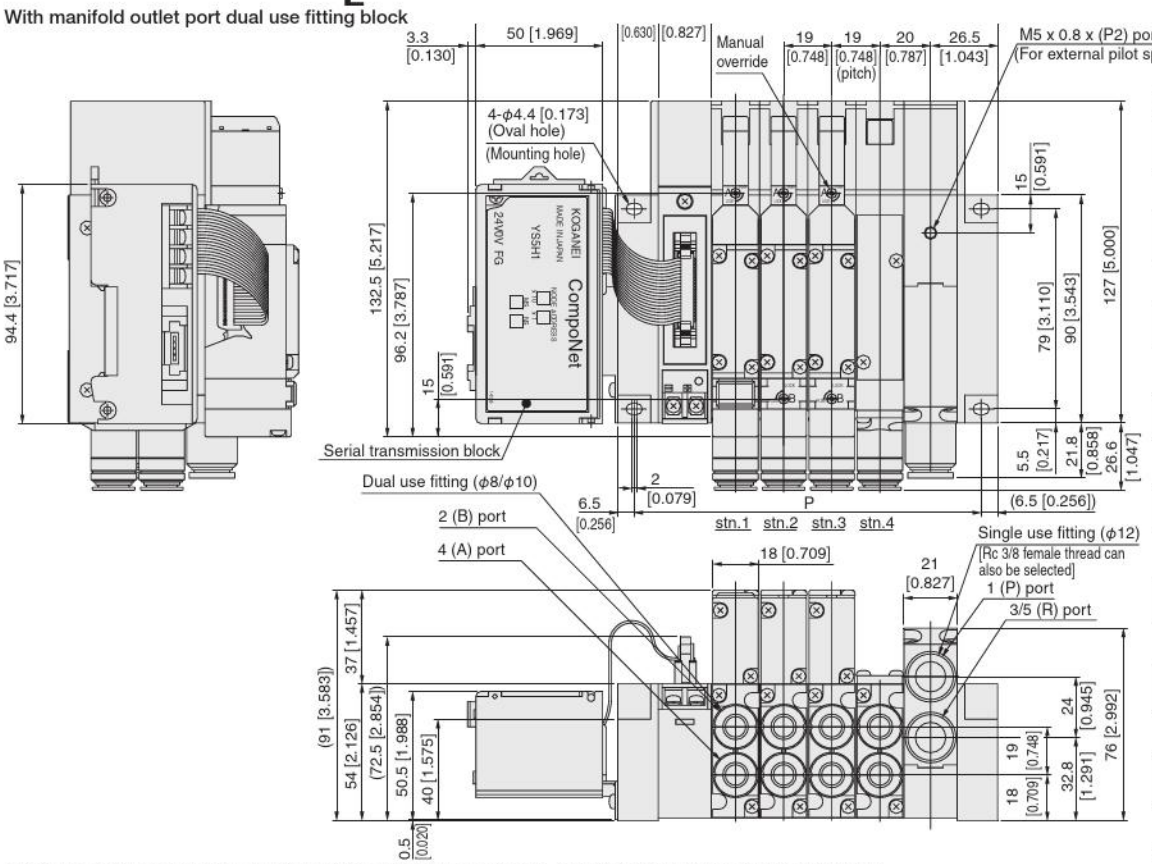

Unit dimensions

Number of units	L	P
2	168 [6.614]	99 [3.898]
3	187 [7.362]	118 [4.646]
4	206 [8.110]	137 [5.394]
5	225 [8.858]	156 [6.142]
6	244 [9.606]	175 [6.890]
7	263 [10.354]	194 [7.638]
8	282 [11.102]	213 [8.386]
9	301 [11.850]	232 [9.134]
10	320 [12.598]	251 [9.882]
11	339 [13.346]	270 [10.630]
12	358 [14.094]	289 [11.378]
13	377 [14.843]	308 [12.126]
14	396 [15.591]	327 [12.874]
15	415 [16.339]	346 [13.622]
16	434 [17.087]	365 [14.370]

Remark: Add 21 [0.827] to the L and P dimensions above when two of the piping blocks are used.

* The communication connectors are sold by Omron Corporation. Contact Omron Corporation for details.

EtherCAT and EtherNet/IP supported

※See the bottom of page 286 for the dimensions of the F18M□PM/PL.

F18M Number of valves S J/M/L Pilot specifications (Base piping type)

※The dimension is of EtherCAT.

With manifold outlet port dual use fitting block

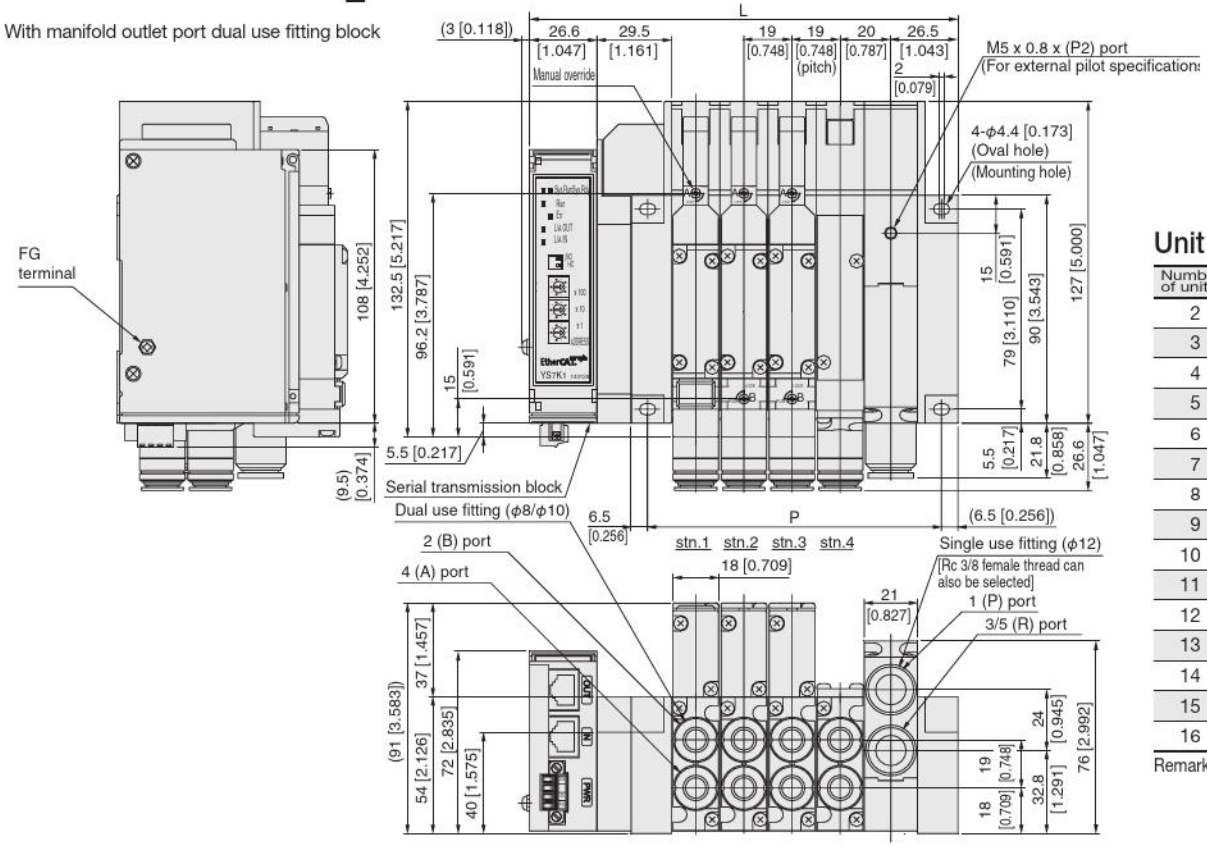

Unit dimensions

Number of units	L	P
2	131.1 [5.161]	78 [3.071]
3	150.1 [5.909]	97 [3.819]
4	169.1 [6.657]	116 [4.567]
5	188.1 [7.406]	135 [5.315]
6	207.1 [8.154]	154 [6.063]
7	226.1 [8.902]	173 [6.811]
8	245.1 [9.650]	192 [7.559]
9	264.1 [10.398]	211 [8.307]
10	283.1 [11.146]	230 [9.055]
11	302.1 [11.894]	249 [9.803]
12	321.1 [12.642]	268 [10.551]
13	340.1 [13.390]	287 [11.299]
14	359.1 [14.138]	306 [12.047]
15	378.1 [14.886]	325 [12.795]
16	397.1 [15.634]	344 [13.543]

Remarks: When using two piping blocks, add 21 to the above L and P dimensions.

DeviceNet supported

F18M [Number of valves] S J/M/L (Base piping specifications)

*See the bottom of page 286 for the dimensions of the F18M□PM/PL.

With manifold outlet port dual use fitting block

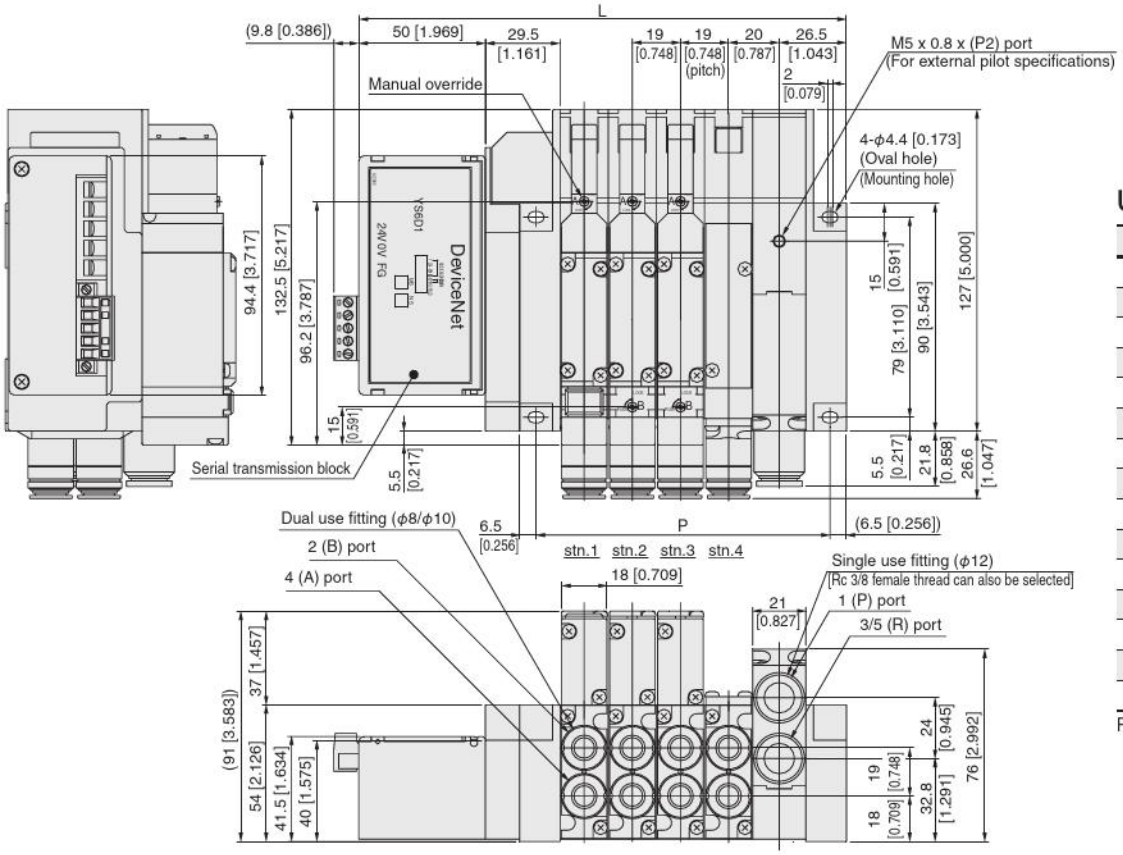

Unit dimensions

Number of units	L	P
2	154.5 [6.083]	78 [3.071]
3	173.5 [6.831]	97 [3.819]
4	192.5 [7.579]	116 [4.567]
5	211.5 [8.327]	135 [5.315]
6	230.5 [9.074]	154 [6.063]
7	249.5 [9.823]	173 [6.811]
8	268.5 [10.571]	192 [7.559]
9	287.5 [11.319]	211 [8.307]
10	306.5 [12.067]	230 [9.055]
11	325.5 [12.815]	249 [9.803]
12	344.5 [13.563]	268 [10.551]
13	363.5 [14.311]	287 [11.299]
14	382.5 [15.059]	306 [12.047]
15	401.5 [15.807]	325 [12.795]
16	420.5 [16.555]	344 [13.543]

Remarks: When using two piping blocks, add 21 to the above L and P dimensions.

Additional parts (sold separately)

●Muffler: **KM-J12** [for both plug-in and non-plug-in type]

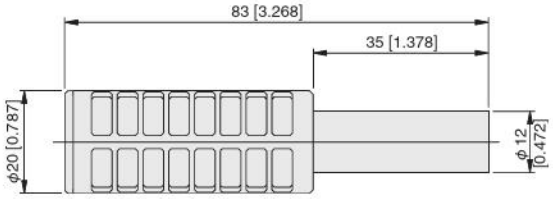

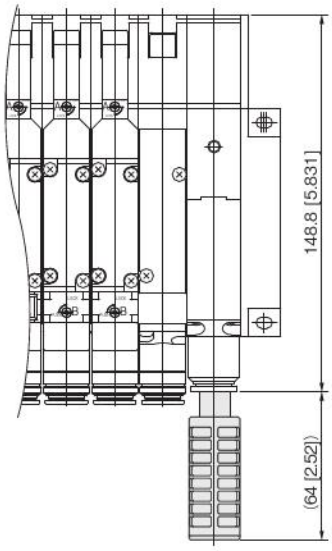

●Muffler: **KM-J8** [for individual exhaust spacer only]

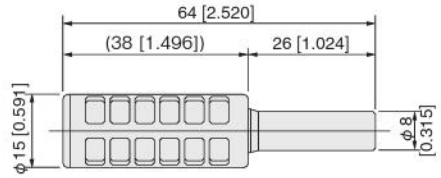

●Muffler: **KM-J10** [for individual exhaust spacer only]

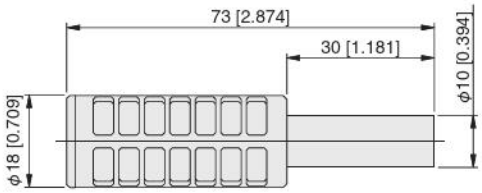

F Series Specifications confirmation Form

INDEX

■F10, F15 Series

Monoblock Manifold A Type (Base Piping Type) 294
Monoblock Manifold F Type (Direct Piping Type) 296
Monoblock Manifold A Type, Wire-Saving Type (Base Piping Type) 298
Monoblock Manifold F Type, Wire-Saving Type (Direct Piping Type) 300
PC Board Manifold A Type (Base Piping Type) 302
PC Board Manifold F Type (Direct Piping Type) 304
Split Manifold Non-Plug-in Type 306
Split Manifold Plug-in Type 308
Split Manifold Serial Transmission Type 310
Easy Asseembly Type Manifold Non-Plug-In Type 312
Easy Asseembly Type Manifold Plug-in Type 314
Easy Assembly Type Manifold Serial Transmission Type 316

■F18 Series

Monoblock Manifold A Type (Base Piping Type) 318
Monoblock Manifold F Type (Direct Piping Type) 320
Split Manifold Non-Plug-in Type 322
Split Manifold Plug-in Type 324
Split Manifold Serial Transmission Type 326

Example of Specifications Confirmation Form

When ordering F series manifolds, use this specifications confirmation form for complex model configurations, for confirming specifications, etc.
Using the example below for reference, fill out the required items in the "Specifications confirmation Forms" found on p.202 and up, and send it.
(Make copies of the Specifications Confirmation Form for your use.)

F10, F15 Series

Monoblock Manifold
A Type (Base Piping Type)

Order Date Month/ Day/ Year/

Company name	
Contact person	
Order No.	

Specifications Confirmation Form 1/2

• Fill in selections inside the thick-lined boxes.

Manifold model

F [10] M [8] A/AH [J] [ ]

Valve size
10: 10mm width
15: 15mm width

Valve units
2 to 20

Manifold outlet specification
J : With dual use fitting blocks
M: With female thread blocks
L : With selectable fitting blocks

Pilot specification
Blank: Internal pilot manifold
G : External pilot manifold

Mounting valve model

stn. [ ] F [Valve size] T [Valve specification] [ ] - [Note 14] - [Note 3] - A1 - [PS] - [Note 4] - [Note 8] - [Note 5] [DC24V]

Operation type
Blank: Internal pilot type[Note1]
G : External pilot type (for positive pressure)[Note2]
V : External pilot type (for vacuum)[Note2]

IP Specification
Blank :Standard
P[Note14]:IP Specification

Manual override
Blank: Manual override button
R : Manual override lever[Note3]
83 : Protruding locking type[Note11]

Wiring specification
Blank: L type plug connector, Without connector
PN : S type plug connector, Without connector
PS : S type plug connector, Lead wire length 300mm [11.8in.]
PL : L type plug connector, Lead wire length 300mm [11.8in.]
PS3 : S type plug connector, Lead wire length 3000mm [118in.]
PL3 : L type plug connector, Lead wire length 3000mm [118in.]
CPS : Pre-wired positive common terminal S type plug connector, Lead wire length 300mm [11.8in.]
CPL : Pre-wired positive common terminal L type plug connector, Lead wire length 300mm [11.8in.]
CPS3: Pre-wired positive common terminal S type plug connector, Lead wire length 3000mm [118in.]
CPL3: Pre-wired positive common terminal L type plug connector, Lead wire length 3000mm [118in.]
39L : DIN connector type with indicator[Note12]
39N : DIN connector type without indicator[Note12]

Back pressure prevention valve[Note8]
Blank: No back pressure prevention valve
E1 : With back pressure prevention valve

Individual air supply and exhaust spacer, stop valve[Note5]
Blank: No spacer and no stop valve
NPM : Individual air supply spacer (with M5 female thread for F10)[Note13]
NP6 : Individual air supply spacer (with ϕ6 fitting for F15)[Note13]
NP8 : Individual air supply spacer (with ϕ8 fitting for F15)[Note13]
NRM : Individual exhaust spacer (with M5 female thread for F10)[Note13]
NR6 : Individual exhaust spacer (with ϕ6 fitting for F15)[Note13]
NR8 : Individual exhaust spacer (with ϕ8 fitting for F15)[Note13]
STP : With stop valve[Note1]

Voltage
DC12V[Note9]
DC24V
AC100V[Note10,13]
AC240V[Note10,11]

Manifold fitting specifications[Note4]
Can be selected only when the manifold outlet specification is **L** (with selectable fitting blocks (metric))
J5 : Manifold side outlet port with single use fitting block (**F10**: ϕ4, **F15**: ϕ6)
J6 : Manifold side outlet port with single use fitting block (**F10**: ϕ6, **F15**: ϕ8)
M : Manifold side outlet port with female thread block (**F10**: M5X0.8, **F15**: Rc1/8)
J5A : Manifold side outlet port with single use fitting block, 3-port normally closed (NC) (**F10**: ϕ4, **F15**: ϕ6)
J5B : Manifold side outlet port with single use fitting block, 3-port normally open (NO) (**F10**: ϕ4, **F15**: ϕ6)
J6A : Manifold side outlet port with single use fitting block, 3-port normally closed (NC) (**F10**: ϕ6, **F15**: ϕ8)
J6B : Manifold side outlet port with single use fitting block, 3-port normally open (NO) (**F10**: ϕ6, **F15**: ϕ8)
MA : Manifold side outlet port with female thread block, 3-port normally closed (NC) (**F10**: M5X0.8, **F15**: Rc1/8)
MB : Manifold side outlet port with female thread block, 3-port normally open (NO) (**F10**: M5X0.8, **F15**: Rc1/8)

Can be selected only when the manifold type is **AH** and the manifold outlet specification is **L** (with selectable fitting blocks (imperial))
MH : Manifold side outlet port with female thread block (**F10**:10-32UNF, **F15**: NPT1/8)
MAH : Manifold side outlet port with female thread block, 3-port normally closed (NC) (**F10**:10-32UNF, **F15**: NPT1/8)
MBH : Manifold side outlet port with female thread block, 3-port normally open (NO) (**F10**:10-32UNF, **F15**: NPT1/8)

Enter ○ in each designated station in tables on the next page.

F10, F15 Series

Monoblock Manifold A Type (Base Piping Type)

Specifications Confirmation Form 2/2

※For specifying the valve and block-off plate to be mounted at each station, enter ○ in each applicable box below.

Mounting valve models

Mounting valve, block-off plate \ Station		1	2	3	4	5	6	7	8	9	10	11	12	13	14	15	16	17	18	19	20
F □ T0	2-position, for single solenoid only																				
F □ T1	2-position, single solenoid specification																				
F □ T2	2-position, double solenoid specification																				
F □ T3	3-position, closed center																				
F □ T4[Note6]	3-position, exhaust center																				
F □ T5[Note6]	3-position, pressure center																				
F □ TA[Note7]	Tandem 3-port (NC and NC)																				
F □ TB[Note7]	Tandem 3-port (NO and NO)																				
F □ TC[Note7]	Tandem 3-port (NC and NO)																				
F □ LT0	(Low current type) 2-position, for single solenoid only																				
F □ LT1	(Low current type) 2-position, single solenoid specification																				
F □ LT2	(Low current type) 2-position, double solenoid specification																				
F □ LT3	(Low current type) 3-position, closed center																				
F □ LT4[Note6]	(Low current type) 3-position, exhaust center																				
F □ LT5[Note6]	(Low current type) 3-position, pressure center																				
F □ LTA[Note7]	(Low current type) Tandem 3-port (NC and NC)																				
F □ LTB[Note7]	(Low current type) Tandem 3-port (NO and NO)																				
F □ LTC[Note7]	(Low current type) Tandem 3-port (NC and NO)																				
F □ BP	Block-off plate																				
P [Note14]	IP Specification																				
Manual override	R Manual override lever[Note3]																				
	83 Protruding locking type[Note11]																				
Manifold fitting specification[Note4] (Manifold side outlet port)	J5 With single use fitting block																				
	J6 With single use fitting block																				
	M With female thread block																				
	J5A With single use fitting block, 3-port normally closed (NC)																				
	J5B With single use fitting block, 3-port normally open (NO)																				
	J6A With single use fitting block, 3-port normally closed (NC)																				
	J6B With single use fitting block, 3-port normally open (NO)																				
	MA With female thread block, 3-port normally closed (NC)																				
	MB With female thread block, 3-port normally open (NO)																				
	MH With female thread block																				
	MAH With female thread block, 3-port normally closed (NC)																				
	MBH With female thread block, 3-port normally open (NO)																				
E1[Note8]	Back pressure prevention valve																				
NPM	Individual air supply spacer (with M5 female thread for F10)																				
NP6	Individual air supply spacer (with φ 6 fitting for F15)																				
NP8	Individual air supply spacer (with φ 8 fitting for F15)																				
NRM	Individual exhaust spacer (with M5 female thread for F10)																				
NR6	Individual exhaust spacer (with φ 6 fitting for F15)																				
NR8	Individual exhaust spacer (with φ 8 fitting for F15)																				
STP	With stop valve																				

Notes:
1. Cannot be mounted on the external pilot manifold.
2. Cannot be mounted on the internal pilot manifold.
3. To designate a manual override lever, enter ○ in the manual override boxes of the designated station in the above table. When the valve specification is **T1** or **T2**, the manual override lever is placed only on the A side. This is not available with **-39**□.
4. When the manifold outlet specifications are **L** (with selectable fitting), select fitting specification for each station, and enter ○ in the manifold fitting specification boxes of the above table. The 3-port specifications are only available in valve specification **T0**, **T1**, and **T2**.
5. When mounting the individual air supply or exhaust spacer or stop valve, enter ○ in the spacer or stop valve boxes of the designated stations in the above table.
6. Not available in the vacuum valves.
7. Not availabale in external pilot type and vacuum valves.
8. When mounting the back pressure prevention valve, enter ○ in the back pressure prevention valve boxes of the designated stations in the above table. Not available with the individual exhaust spacer and vacuum valve.
9. Not available in low-current type.
10. Not available in low-current type and tandem 3-port valves.
11. Only for wiring specification **-39**□.
12. Only for **F15** series and not available for valve specification **T1**, **TA**, **TB**, and **TC**. In addition, the valve is used only as a double solenoid for **T2**.
13. Not available with DIN connectors (**-39**□).
14. The IP65 protective structure around an electrical device that prevents the infiltration of solid foreign material and water from outside.

Quantity set	Delivery

SPECIFICATION CHECK SHEET

F10, F15 Series

Monoblock Manifold
A Type (Base Piping Type)

Order Date Month/ Day/ Year/

Company name	
Contact person	
Order No.	

Specifications Confirmation Form 1/2

• Fill in selections inside the thick-lined boxes.

Manifold model

F□M□ A/AH □□

Valve size
10: 10mm width
15: 15mm width

Valve units
2 to 20

Manifold outlet specification
J : With dual use fitting blocks
M: With female thread blocks
L : With selectable fitting blocks

Pilot specification
Blank: Internal pilot manifold
G : External pilot manifold

Mounting valve model

stn. □ F Valve size T Valve specification □ - Note 14 - Note 3 - A1 - □ - Note 4 - Note 8 - Note 5 □

Operation type
Blank: Internal pilot type[Note1]
G : External pilot type (for positive pressure)[Note2]
V : External pilot type (for vacuum)[Note2]

IP Specification
Blank :Standard
P[Note14]:IP Specification

Manual override
Blank: Manual override button
R : Manual override lever[Note3]
83 : Protruding locking type[Note11]

Wiring specification
Blank: L type plug connector, Without connector
PN : S type plug connector, Without connector
PS : S type plug connector, Lead wire length 300mm [11.8in.]
PL : L type plug connector, Lead wire length 300mm [11.8in.]
PS3 : S type plug connector, Lead wire length 3000mm [118in.]
PL3 : L type plug connector, Lead wire length 3000mm [118in.]
CPS : Pre-wired positive common terminal S type plug connector, Lead wire length 300mm [11.8in.]
CPL : Pre-wired positive common terminal L type plug connector, Lead wire length 300mm [11.8in.]
CPS3: Pre-wired positive common terminal S type plug connector, Lead wire length 3000mm [118in.]
CPL3: Pre-wired positive common terminal L type plug connector, Lead wire length 3000mm [118in.]
39L : DIN connector type with indicator[Note12]
39N : DIN connector type without indicator[Note12]

Back pressure prevention valve[Note8]
Blank: No back pressure prevention valve
E1 : With back pressure prevention valve

Individual air supply and exhaust spacer, stop valve[Note5]
Blank: No spacer and no stop valve
NPM : Individual air supply spacer (with M5 female thread for F10)[Note13]
NP6 : Individual air supply spacer (with ϕ6 fitting for F15)[Note13]
NP8 : Individual air supply spacer (with ϕ8 fitting for F15)[Note13]
NRM : Individual exhaust spacer (with M5 female thread for F10)[Note13]
NR6 : Individual exhaust spacer (with ϕ6 fitting for F15)[Note13]
NR8 : Individual exhaust spacer (with ϕ8 fitting for F15)[Note13]
STP : With stop valve[Note1]

Voltage
DC12V[Note9]
DC24V
AC100V[Note10,13]
AC240V[Note10,11]

Manifold fitting specifications[Note4]
Can be selected only when the manifold outlet specification is **L** (with selectable fitting blocks (metric))
J5 : Manifold side outlet port with single use fitting block (**F10**: ϕ4, **F15**: ϕ6)
J6 : Manifold side outlet port with single use fitting block (**F10**: ϕ6, **F15**: ϕ8)
M : Manifold side outlet port with female thread block (**F10**: M5X0.8, **F15**: Rc1/8)
J5A : Manifold side outlet port with single use fitting block, 3-port normally closed (NC) (**F10**: ϕ4, **F15**: ϕ6)
J5B : Manifold side outlet port with single use fitting block, 3-port normally open (NO) (**F10**: ϕ4, **F15**: ϕ6)
J6A : Manifold side outlet port with single use fitting block, 3-port normally closed (NC) (**F10**: ϕ6, **F15**: ϕ8)
J6B : Manifold side outlet port with single use fitting block, 3-port normally open (NO) (**F10**: ϕ6, **F15**: ϕ8)
MA : Manifold side outlet port with female thread block, 3-port mormally closed (NC) (**F10**: M5X0.8, **F15**: Rc1/8)
MB : Manifold side outlet port with female thread block, 3-port normally open (NO) (**F10**: M5X0.8, **F15**: Rc1/8)

Can be selected only when the manifold type is **AH** and the manifold outlet specification is **L** (with selectable fitting blocks (imperial))
MH : Manifold side outlet port with female thread block (**F10**:10-32UNF, **F15**: NPT1/8)
MAH : Manifold side outlet port with female thread block, 3-port mormally closed (NC) (**F10**:10-32UNF, **F15**: NPT1/8)
MBH : Manifold side outlet port with female thread block, 3-port normally open (NO) (**F10**:10-32UNF, **F15**: NPT1/8)

Enter ○ in each designated station in tables on the next page.

F10, F15 Series

Monoblock Manifold A Type (Base Piping Type)

Specifications Confirmation Form 2/2

※For specifying the valve and block-off plate to be mounted at each station, enter ○ in each applicable box below.

Mounting valve models

Mounting valve, block-off plate \ Station		1	2	3	4	5	6	7	8	9	10	11	12	13	14	15	16	17	18	19	20
F □ T0	2-position, for single solenoid only																				
F □ T1	2-position, single solenoid specification																				
F □ T2	2-position, double solenoid specification																				
F □ T3	3-position, closed center																				
F □ T4[Note6]	3-position, exhaust center																				
F □ T5[Note6]	3-position, pressure center																				
F □ TA[Note7]	Tandem 3-port (NC and NC)																				
F □ TB[Note7]	Tandem 3-port (NO and NO)																				
F □ TC[Note7]	Tandem 3-port (NC and NO)																				
F □ LT0	(Low current type) 2-position, for single solenoid only																				
F □ LT1	(Low current type) 2-position, single solenoid specification																				
F □ LT2	(Low current type) 2-position, double solenoid specification																				
F □ LT3	(Low current type) 3-position, closed center																				
F □ LT4[Note6]	(Low current type) 3-position, exhaust center																				
F □ LT5[Note6]	(Low current type) 3-position, pressure center																				
F □ LTA[Note7]	(Low current type) Tandem 3-port (NC and NC)																				
F □ LTB[Note7]	(Low current type) Tandem 3-port (NO and NO)																				
F □ LTC[Note7]	(Low current type) Tandem 3-port (NC and NO)																				
F □ BP	Block-off plate																				
P [Note14]	IP Specification																				
Manual override	R Manual override lever[Note3]																				
	83 Protruding locking type[Note11]																				
Manifold fitting specification[Note4] (Manifold side outlet port)	J5 With single use fitting block																				
	J6 With single use fitting block																				
	M With female thread block																				
	J5A With single use fitting block, 3-port normally closed (NC)																				
	J5B With single use fitting block, 3-port normally open (NO)																				
	J6A With single use fitting block, 3-port normally closed (NC)																				
	J6B With single use fitting block, 3-port normally open (NO)																				
	MA With female thread block, 3-port normally closed (NC)																				
	MB With female thread block, 3-port normally open (NO)																				
	MH With female thread block																				
	MAH With female thread block, 3-port normally closed (NC)																				
	MBH With female thread block, 3-port normally open (NO)																				
E1[Note8]	Back pressure prevention valve																				
NPM	Individual air supply spacer (with M5 female thread for F10)																				
NP6	Individual air supply spacer (with ϕ 6 fitting for F15)																				
NP8	Individual air supply spacer (with ϕ 8 fitting for F15)																				
NRM	Individual exhaust spacer (with M5 female thread for F10)																				
NR6	Individual exhaust spacer (with ϕ 6 fitting for F15)																				
NR8	Individual exhaust spacer (with ϕ 8 fitting for F15)																				
STP	With stop valve																				

Notes:
1. Cannot be mounted on the external pilot manifold.
2. Cannot be mounted on the internal pilot manifold.
3. To designate a manual override lever, enter ○ in the manual override boxes of the designated station in the above table. When the valve specification is **T1** or **T2**, the manual override lever is placed only on the A side. This is not available with **-39**□.
4. When the manifold outlet specifications are **L** (with selectable fitting), select fitting specification for each station, and enter ○ in the manifold fitting specification boxes of the above table. The 3-port specifications are only available in valve specification **T0**, **T1**, and **T2**.
5. When mounting the individual air supply or exhaust spacer or stop valve, enter ○ in the spacer or stop valve boxes of the designated stations in the above table.
6. Not available in the vacuum valves.
7. Not availabale in external pilot type and vacuum valves.
8. When mounting the back pressure prevention valve, enter ○ in the back pressure prevention valve boxes of the designated stations in the above table. Not available with the individual exhaust spacer and vacuum valve.
9. Not available in low-current type.
10. Not available in low-current type and tandem 3-port valves.
11. Only for wiring specification **-39**□.
12. Only for **F15** series and not available for valve specification **T1**, **TA**, **TB**, and **TC**. In addition, the valve is used only as a double solenoid for **T2**.
13. Not available with DIN connectors (**-39**□).
14. The IP65 protective structure around an electrical device that prevents the infiltration of solid foreign material and water from outside.

Quantity set	Delivery

F10, F15 Series

Monoblock Manifold
F Type (Direct Piping Type)

Order Date Month/ Day/ Year/

Company name	
Contact person	
Order No.	

Specifications Confirmation Form 1/2

• Fill in selections inside the thick-lined boxes.

Manifold model

F [ ] **M** [ ] **F** / **FH**

Valve units
2 to 20

Valve size
10: 10mm width
15: 15mm width

Mounting valve model

stn. [ ] **F** [Valve size] **T** [Valve specification] - [Note 10] - [Note 1] - [Note 2] - [ ] - [Note 4] - [Note 3] [ ]

IP Specification
Blank :Standard
P[Note10]:IP Specification

Manual override
Blank: Manual override button
R : Manual override lever[Note1]
83 : Protruding locking type[Note7]

Valve outlet type[Note2]
Can be selected only when the manifold type is **F** (metric).
FJ : With dual use fitting block (**F10**: ϕ4 and ϕ6, **F15**: ϕ6 and ϕ8)
FJ5 : With single use fitting block (**F10**: ϕ4, **F15**: ϕ6)
FJ6 : With single use fitting block (**F10**: ϕ6, **F15**: ϕ8)
FM : With female thread block (**F10**: M5X0.8, **F15**: Rc1/8)
FJ5A : With single use fitting block, 3-port normally closed (NC) (**F10**: ϕ4, **F15**: ϕ6)
FJ5B : With single use fitting block, 3-port normally open (NO) (**F10**: ϕ4, **F15**: ϕ6)
FJ6A : With single use fitting block, 3-port normally closed (NC) (**F10**: ϕ6, **F15**: ϕ8)
FJ6B : With single use fitting block, 3-port normally open (NO) (**F10**: ϕ6, **F15**: ϕ8)
FMA : With female thread block, 3-port mormally closed (NC) (**F10**: M5X0.8, **F15**: Rc1/8)
FMB : With female thread block, 3-port normally open (NO) (**F10**: M5X0.8, **F15**: Rc1/8)

Can be selected only when the manifold type is **FH** (imperial).
FMH : With female thread block (**F10**:10-32UNF, **F15**: NPT1/8)
FMAH: With female thread block, 3-port mormally closed (NC) (**F10**:10-32UNF, **F15**: NPT1/8)
FMBH: With female thread block, 3-port normally open (NO) (**F10**:10-32UNF, **F15**: NPT1/8)

Wiring specification
Blank : L type plug connector, Without connector
PN : S type plug connector, Without connector
PS : S type plug connector, Lead wire length 300mm [11.8in.]
PL : L type plug connector, Lead wire length 300mm [11.8in.]
PS3 : S type plug connector, Lead wire length 3000mm [118in.]
PL3 : L type plug connector, Lead wire length 3000mm [118in.]
CPS : Pre-wired positive common terminal S type plug connector, Lead wire length 300mm [11.8in.]
CPL : Pre-wired positive common terminal L type plug connector, Lead wire length 300mm [11.8in.]
CPS3: Pre-wired positive common terminal S type plug connector, Lead wire length 3000mm [118in.]
CPL3: Pre-wired positive common terminal L type plug connector, Lead wire length 3000mm [118in.]
39L : DIN connector type with indicator[Note8]
39N : DIN connector type without indicator[Note8]

Back pressure prevention valve[Note4]
Blank: No back pressure prevention valve
E1 : With back pressure prevention valve

Individual air supply and exhaust spacer, stop valve[Note3]
Blank: No spacer and no stop valve
NPM : Individual air supply spacer (with M5 female thread for F10)[Note9]
NP6 : Individual air supply spacer (with ϕ6 fitting for F15)[Note9]
NP8 : Individual air supply spacer (with ϕ8 fitting for F15)[Note9]
NRM : Individual exhaust spacer (with M5 female thread for F10)[Note9]
NR6 : Individual exhaust spacer (with ϕ6 fitting for F15)[Note9]
NR8 : Individual exhaust spacer (with ϕ8 fitting for F15)[Note9]
STP : With stop valve

Voltage
DC12V[Note5]
DC24V
AC100V[Note6,9]
AC120V[Note6]
AC240V[Note6]

Enter ○ in each designated station in tables on the next page.

F10, F15 Series

Monoblock Manifold F Type (Direct Piping Type)

Specifications Confirmation Form 2/2

※For specifying the valve and block-off plate to be mounted at each station, enter ○ in each applicable box below.

Mounting valve models	Mounting valve, block-off plate \ Station		1	2	3	4	5	6	7	8	9	10	11	12	13	14	15	16	17	18	19	20
	F□T0	2-position, for single solenoid only																				
	F□T1	2-position, single solenoid specification																				
	F□T2	2-position, double solenoid specification																				
	F□T3	3-position, closed center																				
	F□T4	3-position, exhaust center																				
	F□T5	3-position, pressure center																				
	F□TA	Tandem 3-port (NC and NC)																				
	F□TB	Tandem 3-port (NO and NO)																				
	F□TC	Tandem 3-port (NC and NO)																				
	F□LT0	(Low current type) 2-position, for single solenoid only																				
	F□LT1	(Low current type) 2-position, single solenoid specification																				
	F□LT2	(Low current type) 2-position, double solenoid specification																				
	F□LT3	(Low current type) 3-position, closed center																				
	F□LT4	(Low current type) 3-position, exhaust center																				
	F□LT5	(Low current type) 3-position, pressure center																				
	F□LTA	(Low current type) Tandem 3-port (NC and NC)																				
	F□LTB	(Low current type) Tandem 3-port (NO and NO)																				
	F□LTC	(Low current type) Tandem 3-port (NC and NO)																				
	F□BP	Block-off plate																				
	P Note10	IP Specification																				
	Manual override	R Manual override lever Note1																				
		83 Protruding locking type Note7																				
	Valve outlet type Note2	FJ With dual use fitting block																				
		FJ5 With single use fitting block																				
		FJ6 With single use fitting block																				
		FM With female thread block																				
		FJ5A With single use fitting block, 3-port normally closed (NC)																				
		FJ5B With single use fitting block, 3-port normally open (NO)																				
		FJ6A With single use fitting block, 3-port normally closed (NC)																				
		FJ6B With single use fitting block, 3-port normally open (NO)																				
		FMA With female thread block, 3-port normally closed (NC)																				
		FMB With female thread block, 3-port normally open (NO)																				
		FMH With female thread block																				
		FMAH With female thread block, 3-port normally closed (NC)																				
		FMBH With female thread block, 3-port normally open (NO)																				
	E1 Note4	Back pressure prevention valve																				
	NPM	Individual air supply spacer (with M5 female thread for F10)																				
	NP6	Individual air supply spacer (with ϕ 6 fitting for F15)																				
	NP8	Individual air supply spacer (with ϕ 8 fitting for F15)																				
	NRM	Individual exhaust spacer (with M5 female thread for F10)																				
	NR6	Individual exhaust spacer (with ϕ 6 fitting for F15)																				
	NR8	Individual exhaust spacer (with ϕ 8 fitting for F15)																				
	STP	With stop valve																				

Notes:
1. To designate a manual override lever, enter ○ in the manual override boxes of the designated station in the above table. When the valve specification is **T1** or **T2**, the manual override lever is placed only on the A side. This is not available with **-39**□.
2. Select valve outlet type for each station, and enter ○ in the valve outlet type boxes of the above table. The 3-port specifications are only available in valve specifications **T0**, **T1**, and **T2**.
3. When mounting the individual air supply or exhaust spacer or stop valve, enter ○ in the spacer or stop valve boxes of the designated stations in the above table.
4. When mounting the back pressure prevention valve, enter ○ in the back pressure prevention valve boxes of the designated stations in the above table. Not available with the individual exhaust spacer.
5. Not available in low-current type.
6. Not available in low-current type and tandem 3-port valves.
7. Only for wiring specification **-39**□.
8. Only for **F15** series and not available for valve specification **T1**, **TA**, **TB**, and **TC**. In addition, the valve is used only as a double solenoid for **T2**.
9. Not available with DIN connectors (**-39**□).
10. The IP protective structure around an electrical device that prevents the infiltration of solid foreign material and water from outside.

Quantity set	Delivery

F10, F15 Series

Monoblock Manifold A Type, Wire-Saving Type (Base Piping Type)

Specifications Confirmation Form 1/2

Order Date Month/ Day/ Year/

Company name	
Contact person	
Order No.	

• Fill in selections inside the thick-lined boxes.

Manifold model

F□M□ A/AH □□-□-□

Valve size
10: 10mm width
15: 15mm width

Valve units
2 to □[Note]

Manifold outlet specification
J : With dual use fitting blocks
M : With female thread blocks
L : With selectable fitting blocks

Pilot specification
Blank: Internal pilot manifold
G : External pilot manifold

Wiring specification
F100N : Flat cable connector 10-pin
F101N : Flat cable connector 10-pin
F200N : Flat cable connector 20-pin
F201N : Flat cable connector 20-pin
F260N : Flat cable connector 26-pin

(M2.6 mounting screw)
D250N : D-sub connector 25-pin[Note11]
D251N : D-sub connector 25-pin[Note11]

(4-40UNC mounting screw)
D250NU : D-sub connector 25-pin[Note12]
D251NU : D-sub connector 25-pin[Note12]

Wiring connection specification
Blank: Packed wiring
W : Double wiring

Note: For the maximum number of units, check the table for maximum number of valve units by wiring specification on page 51.

Mounting valve model

stn. □ F Valve size T Valve specification □-Note 3-A1-PN-Note 4-Note 8-Note 5 □

Operation type
Blank: Internal pilot type[Note1]
G : External pilot type (for positive pressure)[Note2]
V : External pilot type (for vacuum)[Note2]

Manual override
Blank: Manual override button
R : Manual override lever[Note3]

Manifold fitting specifications[Note4]
Can be selected only when the manifold type is **A** and the manifold outlet specification is **L** (with selectable fitting block (metric)).
J5 : Manifold side outlet port with single use fitting block (**F10**: ϕ4, **F15**: ϕ6)
J6 : Manifold side outlet port with single use fitting block (**F10**: ϕ6, **F15**: ϕ8)
M : Manifold side outlet port with female thread block (**F10**: M5X0.8, **F15**: Rc1/8)
J5A : Manifold side outlet port with single use fitting block, 3-port normally closed (NC) (**F10**: ϕ4, **F15**: ϕ6)
J5B : Manifold side outlet port with single use fitting block, 3-port normally open (NO) (**F10**: ϕ4, **F15**: ϕ6)
J6A : Manifold side outlet port with single use fitting block, 3-port normally closed (NC) (**F10**: ϕ6, **F15**: ϕ8)
J6B : Manifold side outlet port with single use fitting block, 3-port normally open (NO) (**F10**: ϕ6, **F15**: ϕ8)
MA : Manifold side outlet port with female thread block, 3-port normally closed (NC) (**F10**: M5X0.8, **F15**: Rc1/8)
MB : Manifold side outlet port with female thread block, 3-port normally open (NO) (**F10**: M5X0.8, **F15**: Rc1/8)

Can be selected only when the manifold type is **AH** and the manifold outlet specification is **L** (with selectable fitting blocks (imperial)).
MH : Manifold side outlet port with female thread block (**F10**:10-32UNF, **F15**: NPT1/8)
MAH: Manifold side outlet port with female thread block, 3-port normally closed (NC) (**F10**:10-32UNF, **F15**: NPT1/8)
MBH: Manifold side outlet port with female thread block, 3-port normally open (NO) (**F10**:10-32UNF, **F15**: NPT1/8)

Back pressure prevention valve[Note8]
Blank: No back pressure prevention valve
E1 : With back pressure prevention valve

Individual air supply and exhaust spacer, stop valve[Note5]
Blank: No spacer and no stop valve
NPM : Individual air supply spacer (with M5 female thread for F10)
NP6 : Individual air supply spacer (with ϕ6 fitting for F15)
NP8 : Individual air supply spacer (with ϕ8 fitting for F15)
NRM : Individual exhaust spacer (with M5 female thread for F10)
NR6 : Individual exhaust spacer (with ϕ6 fitting for F15)
NR8 : Individual exhaust spacer (with ϕ8 fitting for F15)
STP : With stop valve[Note1]

Voltage
DC12V[Note9]
DC24V
AC100V[Note10]
AC120V[Note10]

Enter ○ in each designated station in tables on the next page.

F10, F15 Series

Monoblock Manifold A Type, Wire-Saving Type (Base Piping Type)

Specifications Confirmation Form 2/2

※For specifying the valve and block-off plate to be mounted at each station, enter ○ in each applicable box below.

Mounting valve models

Mounting valve, block-off plate \ Station		1	2	3	4	5	6	7	8	9	10	11	12	13	14	15	16	17	18	19	20
F □ T0	2-position, for single solenoid only																				
F □ T1	2-position, single solenoid specification																				
F □ T2	2-position, double solenoid specification																				
F □ T3	3-position, closed center																				
F □ T4[Note6]	3-position, exhaust center																				
F □ T5[Note6]	3-position, pressure center																				
F □ TA[Note7]	Tandem 3-port (NC and NC)																				
F □ TB[Note7]	Tandem 3-port (NO and NO)																				
F □ TC[Note7]	Tandem 3-port (NC and NO)																				
F □ LT0	(Low current type) 2-position, for single solenoid only																				
F □ LT1	(Low current type) 2-position, single solenoid specification																				
F □ LT2	(Low current type) 2-position, double solenoid specification																				
F □ LT3	(Low current type) 3-position, closed center																				
F □ LT4[Note6]	(Low current type) 3-position, exhaust center																				
F □ LT5[Note6]	(Low current type) 3-position, pressure center																				
F □ LTA[Note7]	(Low current type) Tandem 3-port (NC and NC)																				
F □ LTB[Note7]	(Low current type) Tandem 3-port (NO and NO)																				
F □ LTC[Note7]	(Low current type) Tandem 3-port (NC and NO)																				
F □ BP	Block-off plate																				
Manual override	(-R) Manual override lever[Note3]																				
Manifold fitting specification-[Note4] (Manifold side outlet port)	J5 With single use fitting block																				
	J6 With single use fitting block																				
	M With female thread block																				
	J5A With single use fitting block, 3-port normally closed (NC)																				
	J5B With single use fitting block, 3-port normally open (NO)																				
	J6A With single use fitting block, 3-port normally closed (NC)																				
	J6B With single use fitting block, 3-port normally open (NO)																				
	MA With female thread block, 3-port normally closed (NC)																				
	MB With female thread block, 3-port normally open (NO)																				
	MH With female thread block																				
	MAH With female thread block, 3-port normally closed (NC)																				
	MBH With female thread block, 3-port normally open (NO)																				
E1[Note8]	Back pressure prevention valve																				
NPM	Individual air supply spacer (with M5 female thread for F10)																				
NP6	Individual air supply spacer (with ϕ 6 fitting for F15)																				
NP8	Individual air supply spacer (with ϕ 8 fitting for F15)																				
NRM	Individual exhaust spacer (with M5 female thread for F10)																				
NR6	Individual exhaust spacer (with ϕ 6 fitting for F15)																				
NR8	Individual exhaust spacer (with ϕ 8 fitting for F15)																				
STP	With stop valve																				

Notes:
1. Cannot be mounted on the external pilot manifold.
2. Cannot be mounted on the internal pilot manifold.
3. To designate a manual override lever, enter ○ in the manual override boxes of the designated station in the above table. When the valve specification is **T1** or **T2**, the manual override lever is placed only on the A side.
4. When the manifold outlet specifications are **L** (with selectable fitting), select fitting specification for each station, and enter ○ in the manifold fitting specification boxes of the above table. The 3-port specifications are only available in valve specification **T0**, **T1**, and **T2**.
5. When mounting the individual air supply or exhaust spacer or stop valve, enter ○ in the spacer or stop valve boxes of the designated stations in the above table.
6. Not available in the vacuum valves.
7. Not availabale in external pilot type and vacuum valves.
8. When mounting the back pressure prevention valve, enter ○ in the back pressure prevention valve boxes of the designated stations in the above table. Not available with the individual exhaust spacer and vacuum valve.
9. Not available in low-current type.
10. Not available in low-current type and tandem 3-port valves. In addtion, only available when the wiring specification is a D-sub connector.
11. Can be selected only when the manifold type is **A**.
12. Can be selected only when the manifold type is **AH**.

Quantity set	Delivery

F10, F15 Series

Monoblock Manifold F Type, Wire-Saving Type (Direct Piping Type)

Specifications Confirmation Form 1/2

Order Date Month/ Day/ Year/

Company name	
Contact person	
Order No.	

• Fill in selections inside the thick-lined boxes.

Manifold model

F□M□ F/FH -□-□

Wiring connection specification
Blank: Packed wiring
W : Double wiring

Wiring specification
F100N : Flat cable connector 10-pin
F101N : Flat cable connector 10-pin
F200N : Flat cable connector 20-pin
F201N : Flat cable connector 20-pin
F260N : Flat cable connector 26-pin

(M2.6 mounting screw)
D250N : D-sub connecor 25-pin[Note7]
D251N : D-sub connector 25-pin[Note7]

(4-40UNC mounting screw)
D250NU : D-sub connector 25-pin[Note8]
D251NU : D-sub connector 25-pin[Note8]

Valve units
2 to □[Note]

Note: For the maximum number of units, check the table for mximum number of valve units by wiring specification on page 51.

Valve size
10: 10mm width
15: 15mm width

Mounting valve model

stn. □ F Valve size T Valve specification [Note 1] - [Note 2] - PN - [Note 4] - [Note 3] [ ]

Manual override
Blank: Manual override button
R : Manual override lever[Note1]

Valve outlet type[Note2]
Can be selected only when the manifold type is **F** (metric).
FJ : With dual use fitting block (**F10**: ϕ4 and ϕ6, **F15**: ϕ6 and ϕ8)
FJ5 : With single use fitting block (**F10**: ϕ4, **F15**: ϕ6)
FJ6 : With single use fitting block (**F10**: ϕ6, **F15**: ϕ8)
FM : With female thread block (**F10**: M5X0.8, **F15**: Rc1/8)
FJ5A : With single use fitting block, 3-port normally closed (NC) (**F10**: ϕ4, **F15**: ϕ6)
FJ5B : With single use fitting block, 3-port normally open (NO) (**F10**: ϕ4, **F15**: ϕ6)
FJ6A : With single use fitting block, 3-port normally closed (NC) (**F10**: ϕ6, **F15**: ϕ8)
FJ6B : With single use fitting block, 3-port normally open (NO) (**F10**: ϕ6, **F15**: ϕ8)
FMA : With female thread block, 3-port mormally closed (NC) (**F10**: M5X0.8, **F15**: Rc1/8)
FMB : With female thread block, 3-port normally open (NO) (**F10**: M5X0.8, **F15**: Rc1/8)

Can be selected only when the manifold type is **FH** (imperial).
FMH : With female thread block (**F10**:10-32UNF, **F15**:NPT1/8)
FMAH : With female thread block, 3-port mormally closed (NC) (**F10**:10-32UNF, **F15**: NPT1/8)
FMBH : With female thread block, 3-port normally open (NO) (**F10**:10-32UNF, **F15**: NPT1/8)

Voltage
DC12V[Note5]
DC24V
AC100V[Note6]
AC120V[Note6]

Individual air supply and exhaust spacer, stop valve[Note3]
Blank: No spacer and no stop valve
NPM : Individual air supply spacer (with M5 female thread for F10)
NP6 : Individual air supply spacer (with ϕ6 fitting for F15)
NP8 : Individual air supply spacer (with ϕ8 fitting for F15)
NRM : Individual exhaust spacer (with M5 female thread for F10)
NR6 : Individual exhaust spacer (with ϕ6 fitting for F15)
NR8 : Individual exhaust spacer (with ϕ8 fitting for F15)
STP : With stop valve

Back pressure prevention valve[Note4]
Blank: No back pressure prevention valve
E1 : With back pressure prevention valve

Enter ○ in each designated station in tables on the next page.

F10, F15 Series

Monoblock Manifold F Type Wire-Saving Type (Direct Piping Type)

Specifications Confirmation Form 2/2

※For specifying the valve and block-off plate to be mounted at each station, enter ○ in each applicable box below.

Mounting valve models	Mounting valve, block-off plate \ Station		1	2	3	4	5	6	7	8	9	10	11	12	13	14	15	16	17	18	19	20
	F □ T0	2-position, for single solenoid only																				
	F □ T1	2-position, single solenoid specification																				
	F □ T2	2-position, double solenoid specification																				
	F □ T3	3-position, closed center																				
	F □ T4	3-position, exhaust center																				
	F □ T5	3-position, pressure center																				
	F □ TA	Tandem 3-port (NC and NC)																				
	F □ TB	Tandem 3-port (NO and NO)																				
	F □ TC	Tandem 3-port (NC and NO)																				
	F □ LT0	(Low current type) 2-position, for single solenoid only																				
	F □ LT1	(Low current type) 2-position, single solenoid specification																				
	F □ LT2	(Low current type) 2-position, double solenoid specification																				
	F □ LT3	(Low current type) 3-position, closed center																				
	F □ LT4	(Low current type) 3-position, exhaust center																				
	F □ LT5	(Low current type) 3-position, pressure center																				
	F □ LTA	(Low current type) Tandem 3-port (NC and NC)																				
	F □ LTB	(Low current type) Tandem 3-port (NO and NO)																				
	F □ LTC	(Low current type) Tandem 3-port (NC and NO)																				
	F □ BP	Block-off plate																				
	Manual override (-R) Manual override lever[Note1]																					
	Valve outlet type[Note2]	FJ With dual use fitting block																				
		FJ5 With single use fitting block																				
		FJ6 With single use fitting block																				
		FM With female thread block																				
		FJ5A With single use fitting block, 3-port normally closed (NC)																				
		FJ5B With single use fitting block, 3-port normally open (NO)																				
		FJ6A With single use fitting block, 3-port normally closed (NC)																				
		FJ6B With single use fitting block, 3-port normally open (NO)																				
		FMA With female thread block, 3-port normally closed (NC)																				
		FMB With female thread block, 3-port normally open (NO)																				
		FMH With female thread block																				
		FMAH With female thread block, 3-port normally closed (NC)																				
		FMBH With female thread block, 3-port normally open (NO)																				
	E1[Note4] Back pressure prevention valve																					
	NPM	Individual air supply spacer (with M5 female thread for F10)																				
	NP6	Individual air supply spacer (with ϕ 6 fitting for F15)																				
	NP8	Individual air supply spacer (with ϕ 8 fitting for F15)																				
	NRM	Individual exhaust spacer (with M5 female thread for F10)																				
	NR6	Individual exhaust spacer (with ϕ 6 fitting for F15)																				
	NR8	Individual exhaust spacer (with ϕ 8 fitting for F15)																				
	STP	With stop valve																				

Notes:
1. To designate a manual override lever, enter ○ in the manual override boxes of the designated station in the above table. When the valve specification is **T1** or **T2**, the manual override lever is placed only on the A side.
2. Select valve outlet type for each station, and enter ○ in the valve outlet type boxes of the above table. In addtion, the 3-port specifications are only available in valve specifications **T0**, **T1**, and **T2**.
3. When mounting the individual air supply or exhaust spacer or stop valve, enter ○ in the spacer or stop valve boxes of the designated stations in the above table.
4. When mounting the back pressure prevention valve, enter ○ in the back pressure prevention valve boxes of the designated stations in the above table. Not available with the individual exhaust spacer.
5. Not available in low-current type.
6. Not available in low-current type and tandem 3-port valves. In addtion, only available when the wiring specification is a D-sub connector.
7. Can be selected only when the manifold type is F.
8. Can be selected only when the manifold type is FH.

Quantity	set	Delivery

F10, F15 Series

PC Board Manifold
A Type (Base Piping Type)

Specifications Confirmation Form 1/2

Order Date Month/ Day/ Year/

Company name	
Contact person	
Order No.	

• Fill in selections inside the thick-lined boxes.

Manifold model

F□M□AP□□-□-□

Wiring connection specification
S : Single wiring
W : Double wiring

Wiring specification
F200
F201

Pilot specification
Blank: Internal pilot manifold
G : External pilot manifold

Manifold outlet specification
J : With dual use fitting blocks
M : With female thread blocks
L : With selectable fitting blocks (metric)

Valve units
6 to **16** (only even-numbered units)
Note: There should be 6 or 8 valve units, when the wiring connection specifications are **-W** (double wiring)

Valve size
10: 10mm width
15: 15mm width

Mounting valve model

stn. □ F Valve size **T** Valve specification **□ - Note 3 - A1 - PP - Note 4 - Note 8 - Note 5 □**

Operation type
Blank: Internal pilot type[Note1]
G : External pilot type (for positive pressure)[Note2]
V : External pilot type (for vacuum)[Note2]

Manual override
Blank: Manual override button
R : Manual override lever[Note3]

Manifold fitting specifications[Note4]
Can be selected only when the manifold outlet specification is **L**.
J5 : Manifold side outlet port with single use fitting block (**F10**: ϕ4, **F15**: ϕ6)
J6 : Manifold side outlet port with single use fitting block (**F10**: ϕ6, **F15**: ϕ8)
M : Manifold side outlet port with female thread block (**F10**: M5X0.8, **F15**: Rc1/8)
J5A : Manifold side outlet port with single use fitting block, 3-port normally closed (NC) (**F10**: ϕ4, **F15**: ϕ6)
J5B : Manifold side outlet port with single use fitting block, 3-port normally open (NO) (**F10**: ϕ4, **F15**: ϕ6)
J6A : Manifold side outlet port with single use fitting block, 3-port normally closed (NC) (**F10**: ϕ6, **F15**: ϕ8)
J6B : Manifold side outlet port with single use fitting block, 3-port normally open (NO) (**F10**: ϕ6, **F15**: ϕ8)
MA : Manifold side outlet port with female thread block, 3-port mormally closed (NC) (**F10**: M5X0.8, **F15**: Rc1/8)
MB : Manifold side outlet port with female thread block, 3-port normally open (NO) (**F10**: M5X0.8, **F15**: Rc1/8)

Back pressure prevention valve[Note8]
Blank: No back pressure prevention valve
E1 : With back pressure prevention valve

Individual air supply and exhaust spacer, stop valve[Note5]
Blank: No spacer and no stop valve
NPM : Individual air supply spacer (with M5 female thread for F10)
NP6 : Individual air supply spacer (with ϕ6 fitting for F15)
NP8 : Individual air supply spacer (with ϕ8 fitting for F15)
NRM : Individual exhaust spacer (with M5 female thread for F10)
NR6 : Individual exhaust spacer (with ϕ6 fitting for F15)
NR8 : Individual exhaust spacer (with ϕ8 fitting for F15)
STP : With stop valve

Voltage
DC12V[Note9]
DC24V

Enter ○ in each designated station in tables on the next page.

F10, F15 Series

PC Board Manifold A Type (Base Piping Type)

Specifications Confirmation Form 2/2

Mounting valve models

Wiring connection specifications are -S (for single wiring)

※For specifying the valve and block-off plate to be mounted at each station, enter ○ in each applicable box below.

Mounting valve, block-off plate \ Station		1	2	3	4	5	6	7	8	9	10	11	12	13	14	15	16
F□T0	2-position, for single solenoid only																
F□T1	2-position, single solenoid specification																
F□LT0	(Low current type) 2-position, for single solenoid only																
F□LT1	(Low current type) 2-position, single solenoid specification																
F□BPC	Block-off plate																
Manual override (-R) Manual override lever[Note3]																	
Manifold fitting specification-[Note4] (Manifold side outlet port)	J5 With single use fitting block																
	J6 With single use fitting block																
	M With female thread block																
	J5A With single use fitting block, 3-port normally closed (NC)																
	J5B With single use fitting block, 3-port normally open (NO)																
	J6A With single use fitting block, 3-port normally closed (NC)																
	J6B With single use fitting block, 3-port normally open (NO)																
	MA With female thread block, 3-port normally closed (NC)																
	MB With female thread block, 3-port normally open (NO)																
E1[Note8]	Back pressure prevention valve																
NPM	Individual air supply spacer (with M5 female thread for F10)																
NP6	Individual air supply spacer (with ϕ 6 fitting for F15)																
NP8	Individual air supply spacer (with ϕ 8 fitting for F15)																
NRM	Individual exhaust spacer (with M5 female thread for F10)																
NR6	Individual exhaust spacer (with ϕ 6 fitting for F15)																
NR8	Individual exhaust spacer (with ϕ 8 fitting for F15)																
STP	With stop valve[Note1]																

Caution: Valve units can be selected from only the even-numbered units between 6 and 16.

Wiring connection specifications are -W (for double wiring)

※For specifying the valve and block-off plate to be mounted at each station, enter ○ in each applicable box below.

Mounting valve, block-off plate \ Station		1	2	3	4	5	6	7	8
F□T0	2-position, for single solenoid only								
F□T1	2-position, single solenoid specification								
F□T2	2-position, double solenoid specification								
F□T3	3-position, closed center								
F□T4[Note6]	3-position, exhaust center								
F□T5[Note6]	3-position, pressure center								
F□TA[Note7]	Tandem 3-port (NC and NC)								
F□TB[Note7]	Tandem 3-port (NO and NO)								
F□TC[Note7]	Tandem 3-port (NC and NO)								
F□LT0	(Low current type) 2-position, for single solenoid only								
F□LT1	(Low current type) 2-position, single solenoid specification								
F□LT2	(Low current type) 2-position, double solenoid specification								
F□LT3	(Low current type) 3-position, closed center								
F□LT4[Note6]	(Low current type) 3-position, exhaust center								
F□LT5[Note6]	(Low current type) 3-position, pressure center								
F□LTA[Note7]	(Low current type) Tandem 3-port (NC and NC)								
F□LTB[Note7]	(Low current type) Tandem 3-port (NO and NO)								
F□LTC[Note7]	(Low current type) Tandem 3-port (NC and NO)								
F□BPC	Block-off plate								
Manual override (-R) Manual override lever[Note3]									
Manifold fitting specification-[Note4] (Manifold side outlet port)	J5 With single use fitting block								
	J6 With single use fitting block								
	M With female thread block								
	J5A With single use fitting block, 3-port normally closed (NC)								
	J5B With single use fitting block, 3-port normally open (NO)								
	J6A With single use fitting block, 3-port normally closed (NC)								
	J6B With single use fitting block, 3-port normally open (NO)								
	MA With female thread block, 3-port normally closed (NC)								
	MB With female thread block, 3-port normally open (NO)								
E1[Note8]	Back pressure prevention valve								
NPM	Individual air supply spacer (with M5 female thread for F10)								
NP6	Individual air supply spacer (with ϕ 6 fitting for F15)								
NP8	Individual air supply spacer (with ϕ 8 fitting for F15)								
NRM	Individual exhaust spacer (with M5 female thread for F10)								
NR6	Individual exhaust spacer (with ϕ 6 fitting for F15)								
NR8	Individual exhaust spacer (with ϕ 8 fitting for F15)								
STP	With stop valve[Note1]								

Caution: There should be either 6 and 8 valves units.

Notes:
1. Cannot be mounted on the external pilot manifold.
2. Cannot be mounted on the internal pilot manifold.
3. To designate a manual override lever, enter ○ in the manual override boxes of the designated station in the left table.
4. When the manifold outlet specifications are **L** (with selectable fitting), select fitting specification for each station, and enter ○ in the manifold fitting specification boxes of the left table.
   The 3-port specifications are only available in valve specification **T0**, **T1**, and **T2**.
5. When mounting the individual air supply or exhaust spacer or stop valve, enter ○ in the spacer or stop valve boxes of the designated stations in the left table.
6. Not available wiith vacuum valves.
7. Not availabale in external pilot type and vacuum valves.
8. When mounting the back pressure prevention valve, enter ○ in the back pressure prevention valve boxes of the designated stations in the left table. Not available with the individual exhaust spacer and vacuum valve.
9. Not available in low-current type.

Quantity set	Delivery

F10, F15 Series

PC Board Manifold
F Type (Direct Piping Type)

Order Date Month/ Day/ Year/

Company name	
Contact person	
Order No.	

Specifications Confirmation Form 1/2

• Fill in selections inside the thick-lined boxes.

Manifold model

F□M□FP-□-□

Wiring connection specification
S : Single wiring
W : Double wiring

Wiring specification
F200
F201

Valve units
6 to **16** (only even-numbered units)

Note: There should be 6 or 8 valve units, when the wiring connection specifications are **-W** (double wiring)

Valve size
10: 10mm width
15: 15mm width

Mounting valve model

stn. □ F Valve size **T** Valve specification Note 1 - Note 2 - **PP** - Note 4 - Note 3 - □

Manual override
Blank: Manual override button
R : Manual override lever[Note1]

Valve outlet type[Note2]
FJ : With dual use fitting block (**F10**: ϕ4 and ϕ6, **F15**: ϕ6 and ϕ8)
FJ5 : With single use fitting block (**F10**: ϕ4, **F15**: ϕ6)
FJ6 : With single use fitting block (**F10**: ϕ6, **F15**: ϕ8)
FM : With female thread block (**F10**: M5X0.8, **F15**: Rc1/8)
FJ5A : With single use fitting block, 3-port normally closed (NC) (**F10**: ϕ4, **F15**: ϕ6)
FJ5B : With single use fitting block, 3-port normally open (NO) (**F10**: ϕ4, **F15**: ϕ6)
FJ6A : With single use fitting block, 3-port normally closed (NC) (**F10**: ϕ6, **F15**: ϕ8)
FJ6B : With single use fitting block, 3-port normally open (NO) (**F10**: ϕ6, **F15**: ϕ8)
FMA : With female thread block, 3-port mormally closed (NC) (**F10**: M5X0.8, **F15**: Rc1/8)
FMB : With female thread block, 3-port normally open (NO) (**F10**: M5X0.8, **F15**: Rc1/8)

Voltage
DC12V[Note5]
DC24V

Individual air supply and exhaust spacer, stop valve[Note3]
Blank: No spacer and no stop valve
NPM : Individual air supply spacer (with M5 female thread for F10)
NP6 : Individual air supply spacer (with ϕ6 fitting for F15)
NP8 : Individual air supply spacer (with ϕ8 fitting for F15)
NRM : Individual exhaust spacer (with M5 female thread for F10)
NR6 : Individual exhaust spacer (with ϕ6 fitting for F15)
NR8 : Individual exhaust spacer (with ϕ8 fitting for F15)
STP : With stop valve

Back pressure prevention valve[Note4]
Blank: No back pressure prevention valve
E1 : With back pressure prevention valve

Enter ○ in each designated station in tables on the next page.

F10, F15 Series

PC Board Manifold F Type (Direct Piping Type)

Specifications Confirmation Form 2/2

Mounting valve models

Wiring connection specifications are -S (for single wiring)

※For specifying the valve and block-off plate to be mounted at each station, enter ○ in each applicable box below.

Mounting valve, block-off plate ＼ Station		1	2	3	4	5	6	7	8	9	10	11	12	13	14	15	16
F □ T0	2-position, for single solenoid only																
F □ T1	2-position, single solenoid specification																
F □ LT0	(Low current type) 2-position, for single solenoid only																
F □ LT1	(Low current type) 2-position, single solenoid specification																
F □ BPC	Block-off plate																
Manual override (-R) Manual override lever[Note1]																	
Valve outlet type[Note2]	FJ With dual use fitting block																
	FJ5 With single use fitting block																
	FJ6 With single use fitting block																
	F With female thread block																
	J5A With single use fitting block, 3-port normally closed (NC)																
	J5B With single use fitting block, 3-port normally open (NO)																
	J6A With single use fitting block, 3-port normally closed (NC)																
	J6B With single use fitting block, 3-port normally open (NO)																
	MA With female thread block, 3-port normally closed (NC)																
	MB With female thread block, 3-port normally open (NO)																
E1[Note4]	Back pressure prevention valve																
NPM	Individual air supply spacer (with M5 female thread for F10)																
NP6	Individual air supply spacer (with ϕ 6 fitting for F15)																
NP8	Individual air supply spacer (with ϕ 8 fitting for F15)																
NRM	Individual exhaust spacer (with M5 female thread for F10)																
NR6	Individual exhaust spacer (with ϕ 6 fitting for F15)																
NR8	Individual exhaust spacer (with ϕ 8 fitting for F15)																
STP	With stop valve																

Caution: Valve units can be selected from only the even-numbered units between 6 and 16.

Wiring connection specifications are -W (for double wiring)

※For specifying the valve and block-off plate to be mounted at each station, enter ○ in each applicable box below.

Mounting valve, block-off plate ＼ Station		1	2	3	4	5	6	7	8
F □ T0	2-position, for single solenoid only								
F □ T1	2-position, single solenoid specification								
F □ T2	2-position, double solenoid specification								
F □ T3	3-position, closed center								
F □ T4	3-position, exhaust center								
F □ T5	3-position, pressure center								
F □ TA	Tandem 3-port (NC and NC)								
F □ TB	Tandem 3-port (NO and NO)								
F □ TC	Tandem 3-port (NC and NO)								
F □ LT0	(Low current type) 2-position, for single solenoid only								
F □ LT1	(Low current type) 2-position, single solenoid specification								
F □ LT2	(Low current type) 2-position, double solenoid specification								
F □ LT3	(Low current type) 3-position, closed center								
F □ LT4	(Low current type) 3-position, exhaust center								
F □ LT5	(Low current type) 3-position, pressure center								
F □ LTA	(Low current type) Tandem 3-port (NC and NC)								
F □ LTB	(Low current type) Tandem 3-port (NO and NO)								
F □ LTC	(Low current type) Tandem 3-port (NC and NO)								
F □ BPC	Block-off plate								
Manual override (-R) Manual override lever[Note1]									
Valve outlet type[Note2]	FJ With dual use fitting block								
	FJ5 With single use fitting block								
	J6 With single use fitting block								
	FM With female thread block								
	FJ5A With single use fitting block, 3-port normally closed (NC)								
	FJ5B With single use fitting block, 3-port normally open (NO)								
	FJ6A With single use fitting block, 3-port normally closed (NC)								
	FJ6B With single use fitting block, 3-port normally open (NO)								
	FMA With female thread block, 3-port normally closed (NC)								
	FMB With female thread block, 3-port normally open (NO)								
E1[Note4]	Back pressure prevention valve								
NPM	Individual air supply spacer (with M5 female thread for F10)								
NP6	Individual air supply spacer (with ϕ 6 fitting for F15)								
NP8	Individual air supply spacer (with ϕ 8 fitting for F15)								
NRM	Individual exhaust spacer (with M5 female thread for F10)								
NR6	Individual exhaust spacer (with ϕ 6 fitting for F15)								
NR8	Individual exhaust spacer (with ϕ 8 fitting for F15)								
STP	With stop valve								

Caution: There should be either 6 and 8 valves units.

Notes:1. To designate a manual override lever, enter ○ in the manual override boxes of the designated station in the left table.
2. Select fitting for each station, and enter ○ in the valve outlet type boxes of the above table. In addtion, the 3-port specifications are only available in valve specifications **T0**, **T1**, and **T2**.
3. When mounting the individual air supply or exhaust spacer or stop valve, enter ○ in the spacer or stop valve boxes of the designated stations in the left table.
4. When mounting the back pressure prevention valve, enter ○ in the back pressure prevention valve boxes of the designated stations in the left table.
5. Not available in low-current type.

Quantity set	Delivery

F10, F15 Series

Split Manifold Non-Plug-in Type

Specifications Confirmation Form 1/2

Order Date Month/ Day/ Year/

Company name	
Contact person	
Order No.	

• Fill in selections inside the thick-lined boxes.

Manifold model

F□M□ N/NH □□-□

Piping block specification (air supply and exhaust)
Can be selected only when the manifold type is **N** (metric).
- **JR**: With dual use fitting, right-side mounting
- **JL**: With dual use fitting, left-side mounting
- **JD**: With dual use fitting, both-side mounting
- **MR**: With female thread, right-side mounting
- **ML**: With female thread, left-side mounting
- **MD**: With female thread, both-side mounting
- **J5R**: With single use fitting φ8, right-side mounting
- **J6R**: With single use fitting φ10, right-side mounting
- **J5L**: With single use fitting φ8, left-side mounting
- **J6L**: With single use fitting φ10, left-side mounting
- **J5D**: With single use fitting φ8, both-side mounting

Can be selected only when the manifold type is **NH** (imperial).
- **MRH**: With female thread, right-side mounting
- **MLH**: With female thread, left-side mounting
- **MDH**: With female thread, both-side mounting

Pilot specification
- **Blank**: Internal pilot manifold
- **G**: External pilot manifold

Manifold outlet specification
- **J**: With dual use fitting blocks
- **M**: With female thread blocks
- **L**: With selectable fitting blocks
- **Blank**: With plates (direct piping type)

Valve units
2 to 20

Valve size
- **10**: 10mm width
- **15**: 15mm width

Mounting valve model

stn. □ F Valve size T Valve specification □-Note 13-Note 3-A1 Note4-□-Note 5-Note 10-Note 6-Note 7 □

When manifold outlet specifications are **J**, **M**, or **L**.

Operation type
- **Blank**: Internal pilot type[Note1]
- **G**: External pilot type[Note2]

IP Specification
- **Blank**: Standard
- **P** [Note13]: IP Specification

Manual override
- **Blank**: Manual override button
- **R**: Manual override lever[Note3]

Manifold fitting specifications[Note5]
Can be selected only when the manifold type is **N** and the manifold outlet specification is **L** (with selectable fitting blocks (metric))
- **J5**: Manifold side outlet port with single use fitting block[Note13] (**F10**: φ4, **F15**: φ6)
- **J6**: Manifold side outlet port with single use fitting block[Note13] (**F10**: φ6, **F15**: φ8)
- **M**: Manifold side outlet port with female thread block[Note13] (**F10**: M5X0.8, **F15**: Rc1/8)
- **J5A**: Manifold side outlet port with single use fitting block, 3-port normally closed (NC)[Note13] (**F10**: φ4, **F15**: φ6)
- **J5B**: Manifold side outlet port with single use fitting block, 3-port normally open (NO)[Note13] (**F10**: φ4, **F15**: φ6)
- **J6A**: Manifold side outlet port with single use fitting block, 3-port normally closed (NC)[Note13] (**F10**: φ6, **F15**: φ8)
- **J6B**: Manifold side outlet port with single use fitting block, 3-port normally open (NO)[Note13] (**F10**: φ6, **F15**: φ8)
- **MA**: Manifold side outlet port with female thread block, 3-port normally closed (NC)[Note13] (**F10**: M5X0.8, **F15**: Rc1/8)
- **MB**: Manifold side outlet port with female thread block, 3-port normally open (NO)[Note13] (**F10**: M5X0.8, **F15**: Rc1/8)

Can be selected only when the manifold type is **NH** and the manifold outlet specification is **L** (with selectable fitting blocks (imperial))
- **MH**: Manifold side outlet port with female thread block[Note14] (**F10**:10-32UNF, **F15**: NPT1/8)
- **MAH**: Manifold side outlet port with female thread block, 3-port normally closed (NC)[Note14] (**F10**:10-32UNF, **F15**: NPT1/8)
- **MBH**: Manifold side outlet port with female thread block, 3-port normally open (NO)[Note14] (**F10**:10-32UNF, **F15**: NPT1/8)

Wiring specification
- **PN**: S type plug connector, Without connector
- **PS**: S type plug connector, Lead wire length 300mm [11.8in.]
- **PS3**: S type plug connector, Lead wire length 3000mm [118in.]
- **CPS**: Pre-wired positive common terminal S type plug connector, Lead wire length 300mm [11.8in.]
- **CPS3**: Pre-wired positive common terminal S type plug connector, Lead wire length 3000mm [118in.]

Valve outlet type
- **A1**: With plate (When manifold outlet specification are **J**, **M**, or **L**, the valve type should be **A1**.)

Can be selected only when the manifold type is **N** and the manifold outlet specification is "**Blank**" (metric).
- **FJ**: With dual use fitting block[Note 4] (**F10**: φ4 and φ6, **F15**: φ6 and φ8)
- **FJ5**: With single use fitting block[Note 4] (**F10**: φ4, **F15**: φ6)
- **FJ6**: With single use fitting block[Note 4] (**F10**: φ6, **F15**: φ8)
- **FM**: With female thread block[Note 4] (**F10**: M5X0.8, **F15**: Rc1/8)
- **FJ5A**: With single use fitting block, 3-port normally closed (NC)[Note 4] (**F10**: φ4, **F15**: φ6)
- **FJ5B**: With single use fitting block, 3-port normally open (NO)[Note 4] (**F10**: φ4, **F15**: φ6)
- **FJ6A**: With single use fitting block, 3-port normally closed (NC)[Note 4] (**F10**: φ6, **F15**: φ8)
- **FJ6B**: With single use fitting block, 3-port normally open (NO)[Note 4] (**F10**: φ6, **F15**: φ8)
- **FMA**: With female thread block, 3-port mormally closed (NC)[Note 4] (**F10**: M5X0.8, **F15**: Rc1/8)
- **FMB**: With female thread block, 3-port normally open (NO)[Note 4] (**F10**: M5X0.8, **F15**: Rc1/8)

Can be selected only when the manifold type is **NH** and the manifold outlet specification is "**Blank**" (imperial).
- **FMH**: With female thread block[Note4] (**F10**:10-32UNF, **F15**: NPT1/8)
- **FMAH**: With female thread block, 3-port mormally closed (NC)[Note4] (**F10**:10-32UNF, **F15**: NPT1/8)
- **FMBH**: With female thread block, 3-port normally open (NO)[Note4] (**F10**:10-32UNF, **F15**: NPT1/8)

Voltage
- **DC12V**[Note11]
- **DC24V**
- **AC100V**[Note12]
- **AC120V**[Note12]

Port isolator
- **Blank**: No port isolator
- **SP**: For 1(P) port[Note7]
- **SR**: For 3(R2), 5(R1) ports[Note7]
- **SA**: For 1(P), 3(R2), 5(R1) ports[Note7]

Individual air supply and exhaust spacer[Note6]
- **Blank**: No spacer
- **NPM**: Individual air supply spacer (with M5 female thread for F10)
- **NP6**: Individual air supply spacer (with φ6 fitting for F15)
- **NP8**: Individual air supply spacer (with φ8 fitting for F15)
- **NRM**: Individual exhaust spacer (with M5 female thread for F10)
- **NR6**: Individual exhaust spacer (with φ6 fitting for F15)
- **NR8**: Individual exhaust spacer (with φ8 fitting for F15)

Back pressure prevention valve[Note10]
- **Blank**: No back pressure prevention valve
- **E2**: With back pressure prevention valve

Enter ○ in each designated station in tables on the next page.

F10, F15 Series

Split Manifold Non-Plug-in Type

Specifications Confirmation Form 2/2

※For specifying the valve and block-off plate to be mounted at each station, enter ○ in each applicable box below.

Mounting valve models

Mounting valve, block-off plate ＼ Station		1	2	3	4	5	6	7	8	9	10	11	12	13	14	15	16	17	18	19	20
F □ T0	2-position, for single solenoid only																				
F □ T1	2-position, single solenoid specification																				
F □ T2	2-position, double solenoid specification																				
F □ T3	3-position, closed center																				
F □ T4	3-position, exhaust center																				
F □ T5	3-position, pressure center																				
F □ TA[Note9]	Tandem 3-port (NC and NC)																				
F □ TB[Note9]	Tandem 3-port (NO and NO)																				
F □ TC[Note9]	Tandem 3-port (NC and NO)																				
F □ LT0	(Low current type) 2-position, for single solenoid only																				
F □ LT1	(Low current type) 2-position, single solenoid specification																				
F □ LT2	(Low current type) 2-position, double solenoid specification																				
F □ LT3	(Low current type) 3-position, closed center																				
F □ LT4	(Low current type) 3-position, exhaust center																				
F □ LT5	(Low current type) 3-position, pressure center																				
F □ LTA[Note9]	(Low current type) Tandem 3-port (NC and NC)																				
F □ LTB[Note9]	(Low current type) Tandem 3-port (NO and NO)																				
F □ LTC[Note9]	(Low current type) Tandem 3-port (NC and NO)																				
F □ BPN	Block-off plate																				
P [Note13]	IP Specification																				
Manual override (-R) Manual override lever[Note3]																					
Valve outlet type[Note4]	FJ With dual use fitting block																				
	FJ5 With single use fitting block																				
	FJ6 With single use fitting block																				
	FM With female thread block																				
	FJ5A With single use fitting block, 3-port normally closed (NC)																				
	FJ5B With single use fitting block, 3-port normally open (NO)																				
	FJ6A With single use fitting block, 3-port normally closed (NC)																				
	FJ6B With single use fitting block, 3-port normally open (NO)																				
	FMA With female thread block, 3-port normally closed (NC)																				
	FMB With female thread block, 3-port normally open (NO)																				
	FMH With female thread block																				
	FMAH With female thread block, 3-port normally closed (NC)																				
	FMBH With female thread block, 3-port normally open (NO)																				
Manifold fitting specification-[Note5] (Manifold side outlet port)	J5 With single use fitting block																				
	J6 With single use fitting block																				
	M With female thread block																				
	J5A With single use fitting block, 3-port normally closed (NC)																				
	J5B With single use fitting block, 3-port normally open (NO)																				
	J6A With single use fitting block, 3-port normally closed (NC)																				
	J6B With single use fitting block, 3-port normally open (NO)																				
	MA With female thread block, 3-port normally closed (NC)																				
	MB With female thread block, 3-port normally open (NO)																				
	MH With female thread block																				
	MAH With female thread block, 3-port normally closed (NC)																				
	MBH With female thread block, 3-port normally open (NO)																				
E2[Note10]	Back pressure prevention valve																				
NPM	Individual air supply spacer (with M5 female thread for F10)																				
NP6	Individual air supply spacer (with ϕ 6 fitting for F15)																				
NP8	Individual air supply spacer (with ϕ 8 fitting for F15)																				
NRM	Individual exhaust spacer (with M5 female thread for F10)																				
NR6	Individual exhaust spacer (with ϕ 6 fitting for F15)																				
NR8	Individual exhaust spacer (with ϕ 8 fitting for F15)																				
Port isolator (-SP) For 1(P) port[Note8]																					
Port isolator (-SR) For 3(R2), 5(R1) ports[Note8]																					
Port isolator (-SA) For 1(P), 3(R2), 5(R1) ports[Note8]																					

Notes:
1. Cannot be mounted on the external pilot manifold.
2. Cannot be mounted on the internal pilot manifold.
3. To designate a manual override lever, enter ○ in the manual override boxes of the designated stations in the above table.
4. When the manifold outlet specifications are "**Blank**", select fitting specification for each station, and enter ○ in the valve outlet type boxes of the above table. The 3-port specifications are only available in valve specifications **T0**, **T1**, and **T2**.
5. When the manifold outlet specifications are **L** (with selectable fitting), select manifold fitting specification for each station, and enter ○ in the manifold fitting specification boxes of the above table. The 3-port specifications are only available in valve specifications **T0**, **T1**, and **T2**.
6. When mounting the individual air supply or exhaust spacer, enter ○ in the spacer boxes of the desigated stations in the above table.
7. To designate a port isolator, enter ○ in one box of the designated stations in the above table.
8. Port isolators can be installed only when piping blocks are mounted on both sides. In addtion, only 1 port isolator can be mounted in 1 manifold for **-SA**, or 1 each port isolator for **-SP** and **-SR** for a total of 2 locations. When shipping, the designated port isolators are installed between the designated station and the station to its immediate left (the next smaller stn. No.).
9. Not availabale in external pilot type.
10. When mounting the back pressure prevention valve , enter ○ in the back pressure prevention valve boxes of the designated stations in the above table. Not available with the individual exhaust spacer.
11. Not available in low-current type.
12. Not available in low-current type and tandem 3-port valves.
13. The IP65 protective structure around an electrical device that prevents the infiltration of solid foreign material and water from outside.

Quantity set	Delivery

F10, F15 Series

Split Manifold Plug-in Type

Specifications Confirmation Form 1/2

Order Date Month/ Day/ Year/

Company name	
Contact person	
Order No.	

• Fill in selections inside the thick-lined boxes.

Manifold model

F□M□ P/PH □□-□-□-□-□□

Valve size
10: 10mm width
15: 15mm width

Valve units
2 to □[Note]
Note: For the maximum number of units, see the table for maximum number of valve units by wiring specification, on P. 66

Pilot specification
Blank: Internal pilot manifold
G : External pilot manifold

Manifold outlet specification
J : With dual use fitting blocks
M : With female thread blocks
L : With selectable fitting blocks
Blank: With plates (direct piping type)

Piping block specification (air supply and exhaust)
Can be selected only when the manifold type is **P** (metric).
JR : With dual use fitting, right-side mounting
JL : With dual use fitting, left-side mounting
JD : With dual use fitting, both-side mounting
MR : With female thread, right-side mounting
ML : With female thread, left-side mounting
MD : With female thread, both-side mounting
J5R : With single use fitting ϕ8, right-side mounting
J6R : With single use fitting ϕ10, right-side mounting
J5L : With single use fitting ϕ8, left-side mounting
J6L : With single use fitting ϕ10, left-side mounting
J5D : With single use fitting ϕ8, both-side mounting
J6D : With single use fitting ϕ10, both-side mounting

Can be selected only when the manifold type is **PH** (imperial).
MRH: With female thread, right-side mounting
MLH: With female thread, left-side mounting
MDH : With female thread, both-side mounting

Wiring connection specification
Blank: Packed wiring
W : Double wiring

Wiring specification

<connector top surface wiring>
F100 : Flat cable connector 10-pin
F100N : Flat cable connector 10-pin without power terminal
F101 : Flat cable connector 10-pin
F101N : Flat cable connector 10-pin without power terminal
F200 : Flat cable connector 20-pin
F200N : Flat cable connector 20-pin without power terminal
F201 : Flat cable connector 20-pin
F201N : Flat cable connector 20-pin without power terminal
F260 : Flat cable connector 26-pin
F260N : Flat cable connector 26-pin without power terminal

(M2.6 mounting screw)
D250 : D-sub connector 25-pin[Note13]
D250N : D-sub connector 25-pin without power terminal[Note13]
D251 : D-sub connector 25-pin[Note13]
D251N : D-sub connector 25-pin without power terminal[Note13]
(4-40UNC mounting screw)
D250U : D-sub connector 25-pin[Note14]
D251U : D-sub connector 25-pin[Note14]
D370NU : D-sub connector 37-pin without power terminal[Note14]

T200: Terminal block 19 terminals

<connector side surface wiring>
F100E : Flat cable connector 10-pin
F100EN : Flat cable connector 10-pin without power terminal
F101E : Flat cable connector 10-pin
F101EN : Flat cable connector 10-pin without power terminal
F200E : Flat cable connector 20-pin
F200EN : Flat cable connector 20-pin without power terminal
F201E : Flat cable connector 20-pin
F201EN : Flat cable connector 20-pin without power terminal
F260E : Flat cable connector 26-pin
F260EN : Flat cable connector 26-pin without power terminal

(M2.6 mounting screw)
D250E : D-sub connector 25-pin[Note13]
D250EN : D-sub connector 25-pin without power terminal[Note13]
D251E : D-sub connector 25-pin[Note13]
D251EN : D-sub connector 25-pin without power terminal[Note13]
(4-40UNC mounting screw)
D250EU : D-sub connector 25-pin[Note14]
D251EU : D-sub connector 25-pin[Note14]

Wiring position (wiring block)
Blank: Left-side mounting
R : Right-side mounting

Voltage
DC12V[Note9]
DC24V
AC100V[Note10]

Mounting valve model

stn. □ F Valve size T Valve specification □-Note 3-A1/Note4-Note 5-Note 12-Note 6-Note 7 □

When manifold outlet specifications are **J**, **M**, or **L**.

Operation type
Blank: Internal pilot type[Note1]
G : External pilot type[Note2]

Manual override
Blank: Manual override button
R : Manual override lever[Note3]

Valve outlet type
A1 : With plate (When manifold outlet specification are **J**, **M**, or **L**, the valve type should be **A1**.)

Can be selected only when the manifold type is **P** and the manifold outlet specification is "**Blank**" (metric).
FJ : With dual use fitting block[Note4] (**F10**: ϕ4 and ϕ6, **F15**: ϕ6 and ϕ8)
FJ5 : With single use fitting block[Note4] (**F10**: ϕ4, **F15**: ϕ6)
FJ6 : With single use fitting block[Note4] (**F10**: ϕ6, **F15**: ϕ8)
FM : With female thread block[Note4] (**F10**: M5X0.8, **F15**: Rc1/8)
FJ5A : With single use fitting block, 3-port normally closed (NC)[Note4] (**F10**: ϕ4, **F15**: ϕ6)
FJ5B : With single use fitting block, 3-port normally open (NO)[Note4] (**F10**: ϕ4, **F15**: ϕ6)
FJ6A : With single use fitting block, 3-port normally closed (NC)[Note4] (**F10**: ϕ6, **F15**: ϕ8)
FJ6B : With single use fitting block, 3-port normally open (NO)[Note4] (**F10**: ϕ6, **F15**: ϕ8)
FMA : With female thread block, 3-port mormally closed (NC)[Note4] (**F10**: M5X0.8, **F15**: Rc1/8)
FMB : With female thread block, 3-port normally open (NO)[Note4] (**F10**: M5X0.8, **F15**: Rc1/8)

Can be selected only when the manifold type is **PH** and the manifold outlet specification is "**Blank**" (imperial).
FMH : With female thread block[Note4] (**F10**:10-32UNF, **F15**: NPT1/8)
FMAH: With female thread block, 3-port mormally closed (NC)[Note4] (**F10**:10-32UNF, **F15**: NPT1/8)
FMBH: With female thread block, 3-port normally open (NO)[Note4] (**F10**:10-32UNF, **F15**: NPT1/8)

Manifold fitting specifications[Note5]
Can be selected only when the manifold type is **P** and the manifold outlet specification is **L** (with selectable fitting blocks (metric))
J5 : Manifold side outlet port with single use fitting block (**F10**: ϕ4, **F15**: ϕ6)
J6 : Manifold side outlet port with single use fitting block (**F10**: ϕ6, **F15**: ϕ8)
M : Manifold side outlet port with female thread block (**F10**: M5X0.8, **F15**: Rc1/8)
J5A : Manifold side outlet port with single use fitting block, 3-port normally closed (NC) (**F10**: ϕ4, **F15**: ϕ6)
J5B : Manifold side outlet port with single use fitting block, 3-port normally open (NO) (**F10**: ϕ4, **F15**: ϕ6)
J6A : Manifold side outlet port with single use fitting block, 3-port normally closed (NC) (**F10**: ϕ6, **F15**: ϕ8)
J6B : Manifold side outlet port with single use fitting block, 3-port normally open (NO) (**F10**: ϕ6, **F15**: ϕ8)
MA : Manifold side outlet port with female thread block, 3-port mormally closed (NC) (**F10**: M5X0.8, **F15**: Rc1/8)
MB : Manifold side outlet port with female thread block, 3-port normally open (NO) (**F10**: M5X0.8, **F15**: Rc1/8)

Can be selected only when manifold type is **PH** and manifold outlet specification is **L** (with selectable fitting blocks (imperial))
MH : Manifold side outlet port with female thread block (**F10**:10-32UNF, **F15**: NPT1/8)
MAH: Manifold side outlet port with female thread block, 3-port mormally closed (NC) (**F10**:10-32UNF, **F15**: NPT1/8)
MBH: Manifold side outlet port with female thread block, 3-port normally open (NO) (**F10**:10-32UNF, **F15**: NPT1/8)

Back pressure prevention valve[Note12]
Blank: No back pressure prevention valve
E2 : With back pressure prevention valve

Individual air supply and exhaust spacer[Note6]
Blank: No spacer
PPM : Individual air supply spacer (with M5 female thread for F10)
PP6 : Individual air supply spacer (with ϕ6 fitting for F15)
PP8 : Individual air supply spacer (with ϕ8 fitting for F15)
PRM : Individual exhaust spacer (with M5 female thread for F10)
PR6 : Individual exhaust spacer (with ϕ6 fitting for F15)
PR8 : Individual exhaust spacer (with ϕ8 fitting for F15)

Port isolator
Blank: No port isolator
SP : For 1(P) port[Note7]
SR : For 3(R2), 5(R1) ports[Note7]
SA : For 1(P), 3(R2), 5(R1) ports[Note7]

Voltage
DC12V[Note9]
DC24V
AC100V[Note10]
AC120V[Note10]

Enter ○ in each designated station in tables on the next page.

F10, F15 Series

Split Manifold Plug-in Type

Specifications Confirmation Form 2/2

※For specifying the valve and block-off plate to be mounted at each station, enter ○ in each applicable box below.

Mounting valve models	Mounting valve, block-off plate \ Station		1	2	3	4	5	6	7	8	9	10	11	12	13	14	15	16	17	18	19	20
	F□T0	2-position, for single solenoid only																				
	F□T1	2-position, single solenoid specification																				
	F□T2	2-position, double solenoid specification																				
	F□T3	3-position, closed center																				
	F□T4	3-position, exhaust center																				
	F□T5	3-position, pressure center																				
	F□TA[Note11]	Tandem 3-port (NC and NC)																				
	F□TB[Note11]	Tandem 3-port (NO and NO)																				
	F□TC[Note11]	Tandem 3-port (NC and NO)																				
	F□LT0	(Low current type) 2-position, for single solenoid only																				
	F□LT1	(Low current type) 2-position, single solenoid specification																				
	F□LT2	(Low current type) 2-position, double solenoid specification																				
	F□LT3	(Low current type) 3-position, closed center																				
	F□LT4	(Low current type) 3-position, exhaust center																				
	F□LT5	(Low current type) 3-position, pressure center																				
	F□LTA[Note11]	(Low current type) Tandem 3-port (NC and NC)																				
	F□LTB[Note11]	(Low current type) Tandem 3-port (NO and NO)																				
	F□LTC[Note11]	(Low current type) Tandem 3-port (NC and NO)																				
	F□BPP	Block-off plate																				
	F□BPP-1W	Block-off plate (wiring for single solenoid)																				
	Manual override (-R) Manual override lever[Note3]																					
	Valve outlet type[Note4]	FJ With dual use fitting block																				
		FJ5 With single use fitting block																				
		FJ6 With single use fitting block																				
		FM With female thread block																				
		FJ5A With single use fitting block, 3-port normally closed (NC)																				
		FJ5B With single use fitting block, 3-port normally open (NO)																				
		FJ6A With single use fitting block, 3-port normally closed (NC)																				
		FJ6B With single use fitting block, 3-port normally open (NO)																				
		FMA With female thread block, 3-port normally closed (NC)																				
		FMB With female thread block, 3-port normally open (NO)																				
		FMH With female thread block																				
		FMAH With female thread block, 3-port normally closed (NC)																				
		FMBH With female thread block, 3-port normally open (NO)																				
	Manifold fitting specification-[Note5] (Manifold side outlet port)	J5 With single use fitting block																				
		J6 With single use fitting block																				
		M With female thread block																				
		J5A With single use fitting block, 3-port normally closed (NC)																				
		J5B With single use fitting block, 3-port normally open (NO)																				
		J6A With single use fitting block, 3-port normally closed (NC)																				
		J6B With single use fitting block, 3-port normally open (NO)																				
		MA With female thread block, 3-port normally closed (NC)																				
		MB With female thread block, 3-port normally open (NO)																				
		MH With female thread block																				
		MAH With female thread block, 3-port normally closed (NC)																				
		MBH With female thread block, 3-port normally open (NO)																				
	E2[Note12]	Back pressure prevention valve																				
	PPM	Individual air supply spacer (with M5 female thread for F10)																				
	PP6	Individual air supply spacer (with ϕ 6 fitting for F15)																				
	PP8	Individual air supply spacer (with ϕ 8 fitting for F15)																				
	PRM	Individual exhaust spacer (with M5 female thread for F10)																				
	PR6	Individual exhaust spacer (with ϕ 6 fitting for F15)																				
	PR8	Individual exhaust spacer (with ϕ 8 fitting for F15)																				
	Port isolator (-SP) For 1(P) port[Note8]																					
	Port isolator (-SR) For 3(R2), 5(R1) ports[Note8]																					
	Port isolator (-SA) For 1(P), 3(R2), 5(R1) ports[Note8]																					

Notes:
1. Cannot be mounted on the external pilot manifold.
2. Cannot be mounted on the internal pilot manifold.
3. To designate a manual override lever, enter ○ in the manual override boxes of the designated stations in the above table.
4. When the manifold outlet specifications are "**Blank**", select fitting specification for each station, and enter ○ in the valve outlet type boxes of the above table. The 3-port specifications are only available in valve specifications **T0**, **T1**, and **T2**.
5. When the manifold outlet specifications are L (with selectable fitting), select manifold fitting specification for each station, and enter ○ in the manifold fitting specification boxes of the above table. The 3-port specifications are only available in valve specifications **T0**, **T1**, and **T2**.
6. When mounting the individual air supply or exhaust spacer, enter ○ in the spacer boxes of the desigated stations in the above table.
7. To designate a port isolator, enter ○ in one port isolator box of the designated stations in the above table.
8. Port isolators can be installed only when piping blocks are mounted on both sides. In addtion, only 1 port isolator can be mounted in 1 manifold for **-SA**, or 1 each port isolator for **-SP** and **-SR** for a total of 2 locations. When shipping, the designated port isolators are installed between the designated station and the station to its immediate left (the next smaller stn. No.).
9. Not available in low-current type.
10. AC100V and AC120V can only be used when wiring specifications are **-D250**□, **-D251**□ (D-sub connector), or **-T200** (terminal). In addition, not available in low-current type and tandem 3-port valves
11. Not availabale in external pilot type.
12. When mounting the back pressure prevention valve, enter ○ in the back pressure prevention valve boxes of the designated stations in the above table. Not available with the individual exhaust spacer.
13. Can be selected only when the manifold type is **P**.
14. Can be selected only when the manifold type is **PH**.

Quantity set	Delivery

F10, F15 Series

Split Manifold Serial Transmission Type

Specifications Confirmation Form 1/2

Order Date Month/ Day/ Year/

Company name	
Contact person	
Order No.	

• Fill in selections inside the thick-lined boxes.

Manifold model

F□M□ S/SH □□-□-□-□-□

Valve size
10: 10mm width
15: 15mm width

Valve units
2 to □[Note]
Note: For the maximum number of units, see the table for maximum number of valve units by wiring specification, on P. 70.

Manifold outlet specification
J : With dual use fitting blocks
M : With female thread blocks
L : With selectable fitting blocks
Blank: With plates (direct piping type)

Pilot specification
Blank: Internal pilot manifold
G : External pilot manifold

Piping block specification (air supply and exhaust)
Can be selected only when the manifold type is **S** (metric).
JR : With dual use fitting, right-side mounting
JL : With dual use fitting, left-side mounting
JD : With dual use fitting, both-side mounting
MR : With female thread, right-side mounting
ML : With female thread, left-side mounting
MD : With female thread, both-side mounting
J5R: With single use fitting φ8, right-side mounting
J6R: With single use fitting φ10, right-side mounting
J5L: With single use fitting φ8, left-side mounting
J6L: With single use fitting φ10, left-side mounting
J5D: With single use fitting φ8, both-side mounting
J6D: With single use fitting φ10, both-side mounting

Can be selected only when the manifold type is **SH** (imperial).
MRH: With female thread, right-side mounting
MLH: With female thread, left-side mounting
MDH: With female thread, both-side mounting

Wiring connection specification
Blank: Packed wiring
W : Double wiring

Wiring position (transmission block)
Blank: Left-side mounting
R : Right-side mounting

Transmission block specification
31 : For OMRON B7A Link Terminal (standard)
32 : For OMRON B7A Link Terminal (high speed)
B1: For CC-Link (16 outputs)
B3: For CC-Link (32 outputs)
D1: For DeviceNet (16 outputs)
D3: For DeviceNet (32 outputs)
H1: For CompoNet (16 outputs)
K1: For EtherCAT (16 outputs)
K3: For EtherCAT (32 outputs)
M1: For EtherNet/IP (16 point output) [Note11]
M3: For EtherNet/IP (32 point output) [Note11]

Mounting valve model

stn. □ F Valve size T Valve specification □ - Note 3 - A1 - Note 5 - Note 10 - Note 6 - Note 7 DC24V

When manifold outlet specifications are **J**, **M**, or **L**. → Note4

Operation type
Blank:Internal pilot type[Note1]
G : External pilot type[Note2]

Manual override
Blank: Manual override button
R : Manual override lever[Note3]

Valve outlet type
A1 : With plate (When manifold outlet specification are **J**, **M**, or **L**, the valve type should be **A1**.)

Can be selected only when the manifold type is **S** and the manifold outlet spec. is "**Blank**" (metric).
FJ : With dual use fitting block (**F10**: φ4 and φ6, **F15**: φ6 and φ8)
FJ5 : With single use fitting block (**F10**: φ4, **F15**: φ6)
FJ6 : With single use fitting block (**F10**: φ6, **F15**: φ8)
FM : With female thread block (**F10**: M5X0.8, **F15**: Rc1/8)
FJ5A : With single use fitting block, 3-port normally closed (NC) (**F10**: φ4, **F15**: φ6)
FJ5B : With single use fitting block, 3-port normally open (NO) (**F10**: φ4, **F15**: φ6)
FJ6A : With single use fitting block, 3-port normally closed (NC) (**F10**: φ6, **F15**: φ8)
FJ6B : With single use fitting block, 3-port normally open (NO) (**F10**: φ6, **F15**: φ8)
FMA : With female thread block, 3-port mormally closed (NC) (**F10**: M5X0.8, **F15**: Rc1/8)
FMB : With female thread block, 3-port normally open (NO) (**F10**: M5X0.8, **F15**: Rc1/8)

Can be selected only when the manifold type is **SH** and the manifold outlet spec. is "**Blank**" (imperial).
FMH : With female thread block (**F10**:10-32UNF, **F15**: NPT1/8)
FMAH: With female thread block, 3-port mormally closed (NC) (**F10**:10-32UNF, **F15**: NPT1/8)
FMBH: With female thread block, 3-port normally open (NO) (**F10**:10-32UNF, **F15**: NPT1/8)

Port isolator
Blank: No port isolator
SP : For 1(P) port[Note7]
SR : For 3(R2), 5(R1) ports[Note7]
SA : For 1(P), 3(R2), 5(R1) ports[Note7]

Individual air supply and exhaust spacer[Note6]
Blank: No spacer
PPM : Individual air supply spacer (with M5 female thread for F10)
PP6 : Individual air supply spacer (with φ6 fitting for F15)
PP8 : Individual air supply spacer (with φ8 fitting for F15)
PRM : Individual exhaust spacer (with M5 female thread for F10)
PR6 : Individual exhaust spacer (with φ6 fitting for F15)
PR8 : Individual exhaust spacer (with φ8 fitting for F15)

Back pressure prevention valve[Note10]
Blank: No back pressure prevention valve
E2 : With back pressure prevention valve

Manifold fitting specifications[Note5]
Can be selected only when the manifold type is **S** and the manifold outlet specification is **L** (with selectable fitting blocks (metric))
J5 : Manifold side outlet port with single use fitting block (**F10**: φ4, **F15**: φ6)
J6 : Manifold side outlet port with single use fitting block (**F10**: φ6, **F15**: φ8)
M : Manifold side outlet port with female thread block (**F10**: M5X0.8, **F15**: Rc1/8)
J5A : Manifold side outlet port with single use fitting block, 3-port normally closed (NC) (**F10**: φ4, **F15**: φ6)
J5B : Manifold side outlet port with single use fitting block, 3-port normally open (NO) (**F10**: φ4, **F15**: φ6)
J6A : Manifold side outlet port with single use fitting block, 3-port normally closed (NC) (**F10**: φ6, **F15**: φ8)
J6B : Manifold side outlet port with single use fitting block, 3-port normally open (NO) (**F10**: φ6, **F15**: φ8)
MA : Manifold side outlet port with female thread block, 3-port mormally closed (NC) (**F10**: M5X0.8, **F15**: Rc1/8)
MB : Manifold side outlet port with female thread block, 3-port normally open (NO) (**F10**: M5X0.8, **F15**: Rc1/8)

Can be selected only when the manifold type is **SH** and the manifold outlet specification is **L** (with selectable fitting blocks (imperial))
MH : Manifold side outlet port with female thread block (**F10**:10-32UNF, **F15**: NPT1/8)
MAH : Manifold side outlet port with female thread block, 3-port mormally closed (NC) (**F10**:10-32UNF, **F15**: NPT1/8)
MBH : Manifold side outlet port with female thread block, 3-port normally open (NO) (**F10**:10-32UNF, **F15**: NPT1/8)

→ Enter ○ in each designated station in tables on the next page.

F10, F15 Series

Split Manifold Serial Transmission Type

Specifications Confirmation Form 2/2

※For specifying the valve and block-off plate to be mounted at each station, enter ○ in each applicable box below.

Mounting valve models

Mounting valve, block-off plate \ Station		1	2	3	4	5	6	7	8	9	10	11	12	13	14	15	16	17	18	19	20
F□T0	2-position, for single solenoid only																				
F□T1	2-position, single solenoid specification																				
F□T2	2-position, double solenoid specification																				
F□T3	3-position, closed center																				
F□T4	3-position, exhaust center																				
F□T5	3-position, pressure center																				
F□TA[Note9]	Tandem 3-port (NC and NC)																				
F□TB[Note9]	Tandem 3-port (NO and NO)																				
F□TC[Note9]	Tandem 3-port (NC and NO)																				
F□LT0	(Low current type) 2-position, for single solenoid only																				
F□LT1	(Low current type) 2-position, single solenoid specification																				
F□LT2	(Low current type) 2-position, double solenoid specification																				
F□LT3	(Low current type) 3-position, closed center																				
F□LT4	(Low current type) 3-position, exhaust center																				
F□LT5	(Low current type) 3-position, pressure center																				
F□LTA	(Low current type) Tandem 3-port (NC and NC)																				
F□LTB	(Low current type) Tandem 3-port (NO and NO)																				
F□LTC	(Low current type) Tandem 3-port (NC and NO)																				
F□BPP	Block-off plate																				
Manual override (-R) Manual override lever[Note3]																					
Valve outlet type[Note4]	FJ With dual use fitting block																				
	FJ5 With single use fitting block																				
	FJ6 With single use fitting block																				
	FM With female thread block																				
	FJ5A With single use fitting block, 3-port normally closed (NC)																				
	FJ5B With single use fitting block, 3-port normally open (NO)																				
	FJ6A With single use fitting block, 3-port normally closed (NC)																				
	FJ6B With single use fitting block, 3-port normally open (NO)																				
	FMA With female thread block, 3-port normally closed (NC)																				
	FMB With female thread block, 3-port normally open (NO)																				
	FMH With female thread block																				
	FMAH With female thread block, 3-port normally closed (NC)																				
	FMBH With female thread block, 3-port normally open (NO)																				
Manifold fitting specification-[Note5] (Manifold side outlet port)	J5 With single use fitting block																				
	J6 With single use fitting block																				
	M With female thread block																				
	J5A With single use fitting block, 3-port normally closed (NC)																				
	J5B With single use fitting block, 3-port normally open (NO)																				
	J6A With single use fitting block, 3-port normally closed (NC)																				
	J6B With single use fitting block, 3-port normally open (NO)																				
	MA With female thread block, 3-port normally closed (NC)																				
	MB With female thread block, 3-port normally open (NO)																				
	MH With female thread block																				
	MAH With female thread block, 3-port normally closed (NC)																				
	MBH With female thread block, 3-port normally open (NO)																				
E2[Note10]	Back pressure prevention valve																				
PPM	Individual air supply spacer (with M5 female thread for F10)																				
PP6	Individual air supply spacer (with ϕ 6 fitting for F15)																				
PP8	Individual air supply spacer (with ϕ 8 fitting for F15)																				
PRM	Individual exhaust spacer (with M5 female thread for F10)																				
PR6	Individual exhaust spacer (with ϕ 6 fitting for F15)																				
PR8	Individual exhaust spacer (with ϕ 8 fitting for F15)																				
Port isolator (-SP) For 1(P) port[Note8]																					
Port isolator (-SR) For 3(R2), 5(R1) ports[Note8]																					
Port isolator (-SA) For 1(P), 3(R2), 5(R1) ports[Note8]																					

Notes:
1. Cannot be mounted on the external pilot manifold.
2. Cannot be mounted on the internal pilot manifold.
3. To designate a manual override lever, enter ○ in the manual override boxes of the designated stations in the above table.
4. When the manifold outlet specifications are "**Blank**", select fitting specification for each station, and enter ○ in the valve outlet type boxes of the above table. The 3-port specifications are only available in valve specifications **T0**, **T1**, and **T2**.
5. When the manifold outlet specifications are **L** (with selectable fitting), select manifold fitting specification for each station, and enter ○ in the manifold fitting specification boxes of the above table. The 3-port specifications are only available in valve specifications **T0**, **T1**, and **T2**.
6. When mounting the individual air supply or exhaust spacer, enter ○ in the spacer boxes of the desigated stations in the above table.
7. To designate a port isolator, enter ○ in one port isolator box of the designated stations in the above table.
8. Port isolators can be installed only when piping blocks are installed on both sides. In addtion, only 1 port isolator can be mounted in 1 manifold for **-SA**, or 1 each port isolator for **-SP** and **-SR** for a total of 2 locations. When shipping, the designated port isolators are installed between the designated station and the station to its immediate left (the next smaller stn. No.).
9. Not availabale in external pilot type.
10. When mounting the back pressure prevention valve , enter ○ in the back pressure prevention valve boxes of the designated stations in the above table. Not available with the individual exhaust spacer.
11. Complies with the CE marking regulations.

Quantity set	Delivery

F10, F15 Series

Easy Assembly Type Manifold Non-Plug-in Type

Specifications Confirmation Form 1/2

Order Date Month/ Day/ Year/

Company name	
Contact person	
Order No.	

●Fill in selections inside the thick-lined boxes.

Manifold model

F □ M □ XN/XNH □ □ - □ - □

Valve size
10: 10 mm width
15: 15mm width

Valve units
2 to **21**[Note13]

Manifold outlet specification
J: With dual use fitting blocks
M: With female thread blocks
L: With selectable fitting blocks
Blank: With plates (direct piping type)

Pilot specification
Blank : Internal pilot manifold
G: External pilot manifold

Mounting specification
Blank : Direct mounting
DN : With DIN bracket (no rail)
DR : With DIN bracket, with rail

Piping block specification (air supply, exhaust and intermediate)

Fitting block
JR: Dual use fitting, right-side mounting
JL: Dual use fitting, left-side mounting
JD: Dual use fitting, both-side mounting
Fitting size (1(P), 3, 5(R) ports) F10: ϕ6, ϕ8 F15: ϕ8, ϕ10

Female thread block
MR: Female thread, right-side mounting
ML: Female thread, left-side mounting
MD: Female thread, both-side mounting
Female thread size (1(P), 3, 5(R) ports) F10: Rc 1/8 F15: Rc 1/4

Single use fitting block
J5R: Single use fitting, right-side mounting
J5L: Single use fitting, left-side mounting
J5D: Single use fitting, both-side mounting
Fitting size (1(P), 3, 5(R) ports) F10: ϕ6 F15: ϕ8

J6R: Single use fitting, right-side mounting
J6L: Single use fitting, left-side mounting
J6D: Single use fitting, both-side mounting
Fitting size (1(P), 3, 5(R) ports) F10: ϕ8 F15: ϕ10

Intermediate piping block
JT: Dual use fitting, both-side mounting, intermediate piping block mounting fitting size F10: ϕ6, ϕ8 F15: ϕ8, ϕ10
J5T: Single use fitting, both-side mounting, intermediate piping block mounting fitting size F10: ϕ6 F15: ϕ8
J6T: Single use fitting, both-side mounting, intermediate piping block mounting fitting size F10: ϕ8 F15: ϕ10
MT: Female thread, both-side mounting, intermediate piping block mounting fitting size F10: Rc 1/8 F15: Rc 1/4
Can be selected only when the manifold type is **XNH** (imperial).
MRH: With female thread, right-side mounting
MLH: With female thread, left-side mounting
MDH: With female thread, both-side mounting
MTH: With female thread, both-side mounting, intermediate piping block mounting

Mounting valve model

stn. □ F Valve size **T** Valve specification **□ - Note 12 - Note 3 - A1 - □ - Note 5 - Note 10 - Note 6 - Note 7 □**

When manifold outlet specifications are **J**, **M**, or **L**.

Note 4

Operation type
Blank: Internal pilot type[Note1]
G: External pilot type[Note2]

IP Specification
Blank : Standard
P[Note13] : IP Specification

Manual override
Blank: Manual override button
R: Manual override lever[Note3]

Voltage
DC12V[Note11]
DC24V
AC100V[Note12]
AC120V[Note12]

Port isolator
Blank: No port isolator
XSP : For 1 (P) port[Note7]
XSR : For 3(R2), 5(R1) ports port[Note7]
XSA : For 1(P), 3(R2), 5(R1) ports[Note7]

Manifold fitting specifications[Note5]
Can be selected only when the manifold outlet specification is **L**.
J5: Manifold side outlet port with single use fitting block **F10**: ϕ4, **F15**: ϕ6
J6: Manifold side outlet port with single use fitting block **F10**: ϕ6, **F15**: ϕ8
M: Manifold side outlet port with female thread block **F10**: M5 x 0.8, **F15**: Rc 1/8
J5A: Manifold side outlet port with single use fitting block, 3-port normally closed (NC) **F10**: ϕ4, **F15**: ϕ6
J5B: Manifold side outlet port with single use fitting block, 3-port normally open (NO) **F10**: ϕ4, **F15**: ϕ6
J6A: Manifold side outlet port with single use fitting block, 3-port normally closed (NC) **F10**: ϕ6, **F15**: ϕ8
J6B: Manifold side outlet port with single use fitting block, 3-port normally open (NO) **F10**: ϕ6, **F15**: ϕ8
MA: Manifold side outlet port with female thread block, 3-port normally closed (NC) **F10**: M5 x 0.8, **F15**: Rc 1/8
MB: Manifold side outlet port with female thread block, 3-port normally open (NO) **F10**: M5 x 0.8, **F15**: Rc 1/8
Can be selected only when the manifold type is **NH** and the manifold outlet specification is **L** (with selectable fitting blocks (imperial))
MH : Manifold side outlet port with female thread block[Note14] (**F10**:10-32UNF, **F15**: NPT1/8)
MAH : Manifold side outlet port with female thread block, 3-port normally closed (NC)[Note14] (**F10**:10-32UNF, **F15**: NPT1/8)
MBH : Manifold side outlet port with female thread block, 3-port normally open (NO)[Note14] (**F10**:10-32UNF, **F15**: NPT1/8)

Back pressure prevention valve[Note10]
Blank: No back pressure prevention valve
E2: With back pressure prevention valve

Individual air supply and exhaust spacer[Note6]
Blank: No spacer
XNPM : Individual air supply spacer (with M5 female thread for F10)
XNP6 : Individual air supply spacer (with ϕ6 fitting for F15)
XNP8 : Individual air supply spacer (with ϕ8 fitting for F15)
XNRM : Individual exhaust spacer (with M5 female thread for F10)
XNR6 : Individual exhaust spacer (with ϕ6 fitting for F15)
XNR8 : Individual exhaust spacer (with ϕ8 fitting for F15)
STP : Stop valve

Wiring specification
PN: S type plug connector, Without connector
PS: S type plug connector, Lead wire length 300mm [11.8in.]
PS3: S type plug connector, Lead wire length 3000mm [118in.]
CPS: Pre-wired positive common terminal S type plug connector, Lead wire length 300mm [11.8in.]
CPS3: Pre-wired positive common terminal S type plug connector, Lead wire length 3000mm [118in.]
MS: Pre-wired negative common terminal S type plug connector Lead wire 300 mm [11.8 in.]
MS3: Pre-wired negative common terminal S type plug connector Lead wire 3000 mm [118 in.]
CMS: Pre-wired negative common terminal S type plug connector Lead wire 300 mm [11.8 in.]
CMS3: Pre-wired negative common terminal S type plug connector Lead wire 3000 mm [118 in.]

Valve outlet type
A1: With plate (When manifold outlet specification are **J**, **M**, or **L**, the valve type should be **A1**.)
FJ : With dual use fitting blockNote4 (**F10**:ϕ4 and ϕ6, **F15**:ϕ6 and ϕ8)
FJ5 : With single use fitting blockNote4 (**F10**:ϕ4, **F15**:ϕ6)
FJ6 : With single use fitting blockNote4 (**F10**:ϕ6, **F15**:ϕ8)
FM : With female thread blockNote4 (**F10**: M5X0.8, **F15**: Rc1/8)
FJ5A : With single use fitting block, 3-port normally closed (NC)[Note4] (**F10**:ϕ4, **F15**:ϕ6)
FJ5B : With single use fitting block, 3-port normally open (NO)[Note4] (**F10**:ϕ4, **F15**:ϕ6)
FJ6A : With single use fitting block, 3-port normally closed (NC)[Note4] (**F10**:ϕ6, **F15**:ϕ8)
FJ6B : With single use fitting block, 3-port normally open (NO)[Note4] (**F10**:ϕ6, **F15**:ϕ8)
FMA : With female thread block, 3-port normally closed (NC)[Note4] (**F10**: M5X0.8, **F15**: Rc1/8)
FMB : With female thread block, 3-port normally open (NO)[Note4] (**F10**: M5X0.8, **F15**: Rc1/8)
Can be selected only when the manifold type is **NH** and the manifold outlet specification is "**Blank**" (imperial).
MH : Manifold side outlet port with female thread block (**F10**:10-32UNF, **F15**: NPT1/8)
MAH : Manifold side outlet port with female thread block, 3-port normally closed (NC) (**F10**:10-32UNF, **F15**: NPT1/8)
MBH : Manifold side outlet port with female thread block, 3-port normally open (NO) (**F10**:10-32UNF, **F15**: NPT1/8)

Enter ○ in each designated station in tables on the next page.

F10, F15 Series

Easy Assembly Type Manifold Non-Plug-in Type

Specifications Confirmation Form 2/2

※For specifying the valve and block-off plate to be mounted at each station, enter ○ in each applicable box below.

Mounting valve models

Mounting valve, block-off plate \ Station		1	2	3	4	5	6	7	8	9	10	11	12	13	14	15	16	17	18	19	20
F □ T0	2-position, for single solenoid only																				
F □ T1	2-position, single solenoid specification																				
F □ T2	2-position, double solenoid specification																				
F □ T3	3-position, closed center																				
F □ T4	3-position, exhaust center																				
F □ T5	3-position, pressure center																				
F □ TA[Note9]	Tandem 3-port (NC and NC)																				
F □ TB[Note9]	Tandem 3-port (NO and NO)																				
F □ TC[Note9]	Tandem 3-port (NC and NO)																				
F □ LT0	(Low current type) 2-position, for single solenoid only																				
F □ LT1	(Low current type) 2-position, single solenoid specification																				
F □ LT2	(Low current type) 2-position, double solenoid specification																				
F □ LT3	(Low current type) 3-position, closed center																				
F □ LT4	(Low current type) 3-position, exhaust center																				
F □ LT5	(Low current type) 3-position, pressure center																				
F □ LTA[Note9]	(Low current type) Tandem 3-port (NC and NC)																				
F □ LTB[Note9]	(Low current type) Tandem 3-port (NO and NO)																				
F □ LTC[Note9]	(Low current type) Tandem 3-port (NC and NO)																				
F □ XBPN	Block-off plate																				
F □ ZX[Note14]	Intermediate piping block																				
P[Note13]	IP Specifications																				
Manual override (-R) Manual override lever[Note3]																					
Valve outlet type[Note4]	FJ With dual use fitting block																				
	FJ5 With single use fitting block																				
	FJ6 With single use fitting block																				
	FM With female thread block																				
	FJ5A With single use fitting block, 3-port normally closed (NC)																				
	FJ5B With single use fitting block, 3-port normally open (NO)																				
	FJ6A With single use fitting block, 3-port normally closed (NC)																				
	FJ6B With single use fitting block, 3-port normally open (NO)																				
	FMA With female thread block, 3-port normally closed (NC)																				
	FMB With female thread block, 3-port normally open (NO)																				
	FMH With female thread block																				
	FMAH With female thread block, 3-port normally closed (NC)																				
	FMBH With female thread block, 3-port normally open (NO)																				
Manifold fitting specification[Note5] (Manifold side outlet port)	J5 With single use fitting block																				
	J6 With single use fitting block																				
	M With female thread block																				
	J5A With single use fitting block, 3-port normally closed (NC)																				
	J5B With single use fitting block, 3-port normally open (NO)																				
	J6A With single use fitting block, 3-port normally closed (NC)																				
	J6B With single use fitting block, 3-port normally open (NO)																				
	MA With female thread block, 3-port normally closed (NC)																				
	MB With female thread block, 3-port normally open (NO)																				
	MH With female thread block																				
	MAH With female thread block, 3-port normally closed (NC)																				
	MBH With female thread block, 3-port normally open (NO)																				
E2[Note10]	Back pressure prevention valve																				
XNPM	Individual air supply spacer (with M5 female thread for F10)																				
XNP6	Individual air supply spacer (with ϕ 6 fitting for F15)																				
XNP8	Individual air supply spacer (with ϕ 8 fitting for F15)																				
XNRM	Individual exhaust spacer (with M5 female thread for F10)																				
XNR6	Individual exhaust spacer (with ϕ 6 fitting for F15)																				
XNR8	Individual exhaust spacer (with ϕ 8 fitting for F15)																				
STP[Note1]	with stop valve																				
Port isolator (-XSP) For 1(P) port[Note8]																					
Port isolator (-XSR) For 3(R2), 5(R1) ports[Note8]																					
Port isolator (-XSA) For 1(P), 3(R2), 5(R1) ports[Note8]																					

Notes:1. Cannot be mounted on the external pilot manifold.
2. Cannot be mounted on the internal pilot manifold.
3. To designate a manual override lever, enter ○ in the manual override boxes of the designated stations in the above table.
4. When the manifold outlet specifications are "**Blank**", select fitting specification for each station, and enter ○ in the valve outlet type boxes of the above table.
The 3-port specifications are only available in valve specifications **T0, T1,** and **T2.**
5. When the manifold outlet specifications are **L** (with selectable fitting), select manifold fitting specification for each station, and enter ○ in the manifold fitting specification boxes of the above table.
The 3-port specifications are only available in valve specifications **T0, T1,** and **T2.**
6. When mounting the individual air supply or exhaust spacer, enter ○ in the spacer boxes of the desigated stations in the above table.
7. To designate a port isolator, enter ○ in one box of the designated stations in the above table.
8. Port isolators can be installed only when piping blocks are mounted on both sides. In addtion, only 1 port isolator can be mounted in 1 manifold for **-SA,** or 1 each port isolator for **-SP** and **-SR** for a total of 2 locations.
When shipping, the designated port isolators are installed between the designated station and the station to its immediate left (the next smaller stn. No.).
9. Not availabale in external pilot type.
10. When mounting the back pressure prevention valve , enter ○ in the back pressure prevention valve boxes of the designated stations in the above table. Not available with the individual exhaust spacer.
11. Not available in low-current type.
12. Not available in low-current type and tandem 3-port valves.
13. The IP65 protective structure around an electrical device that prevents the infiltration of solid foreign material and water from outside.
14. Only one intermediate piping block can be installed. For information on the type, see page 100 for F10 or page 198 for F15.

Quantity set	Delivery

F10, F15 Series

Easy Assembly Type Manifold Plug-in Type

Order Date Month/ Day/ Year/

Company name	
Contact person	
Order No.	

Specifications Confirmation Form 1/2

●Fill in selections inside the thick-lined boxes.

Manifold model

F □ M □ XP/XPH □ □ - □ - □ - □ - □ □ □

Valve size
10: 10mm width
15: 15mm width

Valve units
2 to □[Note]
Note: For the maximum number of units, see the table for maximum number of valve units by wiring specification, on P. 66

Pilot specification
Blank: Internal pilot manifold
G : External pilot manifold

Manifold outlet specification
J : With dual use fitting blocks
M : With female thread blocks
L : With selectable fitting blocks
Blank: With plates (direct piping type)

Piping block specification (air supply and exhaust)
Can be selected only when the manifold type is **P** (metric).
JR : With dual use fitting, right-side mounting
JL : With dual use fitting, left-side mounting
JD : With dual use fitting, both-side mounting
MR : With female thread, right-side mounting
ML : With female thread, left-side mounting
MD : With female thread, both-side mounting
J5R : With single use fitting ϕ8, right-side mounting
J6R : With single use fitting ϕ10, right-side mounting
J5L : With single use fitting ϕ8, left-side mounting
J6L : With single use fitting ϕ10, left-side mounting
J5D : With single use fitting ϕ8, both-side mounting
J6D : With single use fitting ϕ10, both-side mounting

Can be selected only when the manifold type is **PH** (imperial).
MRH: With female thread, right-side mounting
MLH: With female thread, left-side mounting
MDH : With female thread, both-side mounting

Wiring specification

<connector top surface wiring>
F100 : Flat cable connector 10-pin
F100N : Flat cable connector 10-pin without power terminal
F101 : Flat cable connector 10-pin
F101N : Flat cable connector 10-pin without power terminal
F200 : Flat cable connector 20-pin
F200N : Flat cable connector 20-pin without power terminal
F201 : Flat cable connector 20-pin
F201N : Flat cable connector 20-pin without power terminal
F260 : Flat cable connector 26-pin
F260N : Flat cable connector 26-pin without power terminal

(M2.6 mounting screw)
D250 : D-sub connector 25-pin[Note13]
D250N : D-sub connector 25-pin without power terminal[Note13]
D251 : D-sub connector 25-pin[Note13]
D251N : D-sub connector 25-pin without power terminal[Note13]
(4-40UNC mounting screw)
D250U : D-sub connector 25-pin[Note14]
D251U : D-sub connector 25-pin[Note14]
D370NU : D-sub connector 37-pin without power terminal[Note14]

T200: Terminal block 19 terminals

<connector side surface wiring>
F100E : Flat cable connector 10-pin
F100EN : Flat cable connector 10-pin without power terminal
F101E : Flat cable connector 10-pin
F101EN : Flat cable connector 10-pin without power terminal
F200E : Flat cable connector 20-pin
F200EN : Flat cable connector 20-pin without power terminal
F201E : Flat cable connector 20-pin
F201EN : Flat cable connector 20-pin without power terminal
F260E : Flat cable connector 26-pin
F260EN : Flat cable connector 26-pin without power terminal

(M2.6 mounting screw)
D250E : D-sub connector 25-pin[Note13]
D250EN : D-sub connector 25-pin without power terminal[Note13]
D251E : D-sub connector 25-pin[Note13]
D251EN : D-sub connector 25-pin without power terminal[Note13]
(4-40UNC mounting screw)
D250EU : D-sub connector 25-pin[Note14]
D251EU : D-sub connector 25-pin[Note14]

Wiring connection specification
Blank: Packed wiring
W: Double wiring

Mounting specification
Blank: Direct mounting
DN: With DIN bracket (no rail)
DR: With DIN bracket, with rail

Common specification
Blank: Positive common
CM: Negative common

Voltage
DC12V[Note9]
DC24V
AC100V[Note10]

Mounting valve model

stn. □ F Valve size **T** Valve specifications **□ - Note 3 - A1 - Note 5 - Note 12 - Note 6 - Note 7 □**

When the manifold output type is **J**, **M**, or **L**

Note4

Operation type
Blank: Internal pilot type[Note1]
G: External pilot type[Note2]

Manual mechanism
Blank: Manual button
R: Manual lever[Note3]

Valve outlet type
A1 : With plate (When manifold outlet specification are **J**, **M**, or **L**, the valve type should be **A1**.)

Can be selected only when the manifold type is **P** and the manifold outlet specification is "**Blank**" (metric).
FJ : With dual use fitting block[Note4] (**F10**: ϕ4 and ϕ6, **F15**: ϕ6 and ϕ8)
FJ5 : With single use fitting block[Note4] (**F10**: ϕ4, **F15**: ϕ6)
FJ6 : With single use fitting block[Note4] (**F10**: ϕ6, **F15**: ϕ8)
FM : With female thread block[Note4] (**F10**: M5X0.8, **F15**: Rc1/8)
FJ5A : With single use fitting block, 3-port normally closed (NC)[Note4] (**F10**: ϕ4, **F15**: ϕ6)
FJ5B : With single use fitting block, 3-port normally open (NO)[Note4] (**F10**: ϕ4, **F15**: ϕ6)
FJ6A : With single use fitting block, 3-port normally closed (NC)[Note4] (**F10**: ϕ6, **F15**: ϕ8)
FJ6B : With single use fitting block, 3-port normally open (NO)[Note4] (**F10**: ϕ6, **F15**: ϕ8)
FMA : With female thread block, 3-port mormally closed (NC)[Note4] (**F10**: M5X0.8, **F15**: Rc1/8)
FMB : With female thread block, 3-port normally open (NO)[Note4] (**F10**: M5X0.8, **F15**: Rc1/8)

Can be selected only when the manifold type is **PH** and the manifold outlet specification is "**Blank**" (imperial).
FMH : With female thread block[Note4] (**F10**:10-32UNF, **F15**: NPT1/8)
FMAH: With female thread block, 3-port mormally closed (NC)[Note4] (**F10**:10-32UNF, **F15**: NPT1/8)
FMBH: With female thread block, 3-port normally open (NO)[Note4] (**F10**:10-32UNF, **F15**: NPT1/8)

Manifold fitting specifications[Note5]
Can be selected only when the manifold type is **P** and the manifold outlet specification is **L** (with selectable fitting blocks (metric))
J5 : Manifold side outlet port with single use fitting block (**F10**: ϕ4, **F15**: ϕ6)
J6 : Manifold side outlet port with single use fitting block (**F10**: ϕ6, **F15**: ϕ8)
M : Manifold side outlet port with female thread block (**F10**: M5X0.8, **F15**: Rc1/8)
J5A : Manifold side outlet port with single use fitting block, 3-port normally closed (NC) (**F10**: ϕ4, **F15**: ϕ6)
J5B : Manifold side outlet port with single use fitting block, 3-port normally open (NO) (**F10**: ϕ4, **F15**: ϕ6)
J6A : Manifold side outlet port with single use fitting block, 3-port normally closed (NC) (**F10**: ϕ6, **F15**: ϕ8)
J6B : Manifold side outlet port with single use fitting block, 3-port normally open (NO) (**F10**: ϕ6, **F15**: ϕ8)
MA : Manifold side outlet port with female thread block, 3-port mormally closed (NC) (**F10**: M5X0.8, **F15**: Rc1/8)
MB : Manifold side outlet port with female thread block, 3-port normally open (NO) (**F10**: M5X0.8, **F15**: Rc1/8)

Back pressure prevention valve[Note12]
Blank: Without back pressure prevention valve
E2: With back pressure prevention valve

Indibidual air supply and exhaust spacer[Note6]
Blank: Without spacer
XPPM: Single intake spacer (with M5 female screw for F10)
XPP6: Single intake spacer (with ϕ6 joint for F15)
XPP8: Single intake spacer (with ϕ8 joint for F15)
XPRM: Single exhaust spacer (with M5 female screw for F10)
XPR6: Single exhaust spacer (with ϕ6 joint for F15)
XPR8: Single exhaust spacer (with ϕ8 joint for F15)

Port isolator
Blank: Without split
XSP: For 1 (P) port[Note7]
XSR: For 3 (R2)/5 (R1) port[Note7]
XSA: For 1 (P)/3 (R2)/5 (R1) port[Note7]

Voltage
DC12V[Note9]
DC24V
AC100V[Note10]
AC120V[Note10]

Enter ○ in each designated station in tables on the next page.

F10, F15 Series

Easy Assembly Type Manifold Plug-in Type

Specifications Confirmation Form 2/2

※For specifying the valve and block-off plate to be mounted at each station, enter ○ in each applicable box below.

Mounting valve models

Mounting valve, block-off plate ＼ Station		1	2	3	4	5	6	7	8	9	10	11	12	13	14	15	16	17	18	19	20
F □ **T0**	2-position, for single solenoid only																				
F □ **T1**	2-position, single solenoid specification																				
F □ **T2**	2-position, double solenoid specification																				
F □ **T3**	3-position, closed center																				
F □ **T4**	3-position, exhaust center																				
F □ **T5**	3-position, pressure center																				
F □ **TA**[Note11]	Tandem 3-port (NC and NC)																				
F □ **TB**[Note11]	Tandem 3-port (NO and NO)																				
F □ **TC**[Note11]	Tandem 3-port (NC and NO)																				
F □ **LT0**	(Low current type) 2-position, for single solenoid only																				
F □ **LT1**	(Low current type) 2-position, single solenoid specification																				
F □ **LT2**	(Low current type) 2-position, double solenoid specification																				
F □ **LT3**	(Low current type) 3-position, closed center																				
F □ **LT4**	(Low current type) 3-position, exhaust center																				
F □ **LT5**	(Low current type) 3-position, pressure center																				
F □ **LTA**[Note11]	(Low current type) Tandem 3-port (NC and NC)																				
F □ **LTB**[Note11]	(Low current type) Tandem 3-port (NO and NO)																				
F □ **LTC**[Note11]	(Low current type) Tandem 3-port (NC and NO)																				
F □ **XBPP**	Block-off plate																				
F □ **XBPP-S**	Block-off plate(wiring for single solenoid)																				
F □ **ZX**[Note15]	Intermediate piping block																				
Manual override (**-R**) Manual override lever[Note3]																					
Valve outlet type[Note4]	**FJ** With dual use fitting block																				
	FJ5 With single use fitting block																				
	FJ6 With single use fitting block																				
	FM With female thread block																				
	FJ5A With single use fitting block, 3-port normally closed (NC)																				
	FJ5B With single use fitting block, 3-port normally open (NO)																				
	FJ6A With single use fitting block, 3-port normally closed (NC)																				
	FJ6B With single use fitting block, 3-port normally open (NO)																				
	FMA With female thread block, 3-port normally closed (NC)																				
	FMB With female thread block, 3-port normally open (NO)																				
	FMH With female thread block																				
	FMAH With female thread block, 3-port normally closed (NC)																				
	FMBH With female thread block, 3-port normally open (NO)																				
Manifold fitting specification-[Note5] (Manifold side outlet port)	**J5** With single use fitting block																				
	J6 With single use fitting block																				
	M With female thread block																				
	J5A With single use fitting block, 3-port normally closed (NC)																				
	J5B With single use fitting block, 3-port normally open (NO)																				
	J6A With single use fitting block, 3-port normally closed (NC)																				
	J6B With single use fitting block, 3-port normally open (NO)																				
	MA With female thread block, 3-port normally closed (NC)																				
	MB With female thread block, 3-port normally open (NO)																				
E2[Note12]	Back pressure prevention valve																				
XPPM	Individual air supply spacer (with M5 female thread for F10)																				
XPP6	Individual air supply spacer (with φ 6 fitting for F15)																				
XPP8	Individual air supply spacer (with φ 8 fitting for F15)																				
XPRM	Individual exhaust spacer (with M5 female thread for F10)																				
XPR6	Individual exhaust spacer (with φ 6 fitting for F15)																				
XPR8	Individual exhaust spacer (with φ 8 fitting for F15)																				
Port isolator (**-XSP**) For 1(P) port[Note8]																					
Port isolator (**-XSR**) For 3(R2), 5(R1) ports[Note8]																					
Port isolator (**-XSA**) For 1(P), 3(R2), 5(R1) ports[Note8]																					

Notes:1. Cannot be mounted on the external pilot manifold.
2. Cannot be mounted on the internal pilot manifold.
3. To designate a manual override lever, enter ○ in the manual override boxes of the designated stations in the above table.
4. When the manifold outlet specifications are "**Blank**", select fitting specification for each station, and enter ○ in the valve outlet type boxes of the above table. The 3-port specifications are only available in valve specifications **T0**, **T1**, and **T2**.
5. When the manifold outlet specifications are **L** (with selectable fitting), select manifold fitting specification for each station, and enter ○ in the manifold fitting specification boxes of the above table. The 3-port specifications are only available in valve specifications **T0**, **T1**, and **T2**.
6. When mounting the individual air supply or exhaust spacer, enter ○ in the spacer boxes of the desigated stations in the above table.
7. To designate a port isolator, enter ○ in one port isolator box of the designated stations in the above table.
8. Port isolators can be installed only when piping blocks are mounted on both sides. In addtion, only 1 port isolator can be mounted in 1 manifold for **-SA**, or 1 each port isolator for **-SP** and **-SR** for a total of 2 locations. When shipping, the designated port isolators are installed between the designated station and the station to its immediate left (the next smaller stn. No.).
9. Not available in low-current type.
10. AC100V and AC120V can only be used when wiring specifications are **-D250**□, **-D251**□ (D-sub connector), or **-T200** (terminal). In addition, not available in low-current type and tandem 3-port valves
11. Not availabale in external pilot type.
12. When mounting the back pressure prevention valve, enter ○ in the back pressure prevention valve boxes of the designated stations in the above table. Not available with the individual exhaust spacer.
13. Can be selected only when the manifold type is **XP**.
14. Can be selected only when the manifold type is **XPH**.
15. Only one intermediate piping block can be installed. For information on the type, see page 100 for F10 or page 198 for F15.

Quantity set	Delivery

F10, F15 Series

Easy Assembly Type Manifold Serial Transmission Type

Order Date Month/ Day/ Year/

Company name	
Contact person	
Order No.	

Specifications Confirmation Form 1/2

● Fill in selections inside the thick-lined boxes.

Manifold type

F □ M □ XS/XSH □ □ - □ - □ - □ - □

Valve size
10: 10 mm width
15: 15mm width

Valve units
2 to □Note
NoteFor the maximum number of units, see the table for maximum number of valve units by wiring specification. F10: on P114 F15: on P212

Manifold outlet specification
J : With dual use fitting blocks
M : With female thread blocks
L : With selectable fitting blocks
Blank : With plates (direct piping type)

Pilot specification
Blank: Internal pilot manifold
G: External pilot manifold

Wiring connection specification
Blank: Packed wiring
W: Double wiring

Piping block specification (air supply, exhaust and intermediate)
Can be selected only when the manifold type is **S** (metric).
JR: Dual use fitting, right-side mounting
JL: Dual use fitting, left-side mounting
JD: Dual use fitting, both-side mounting

MR: Female thread, right-side mounting
ML: Female thread, left-side mounting
MD: Female thread, both-side mounting

J5R :Single use fitting ϕ8, right-side mounting
J6R :Single use fitting ϕ10, right-side mounting
J5L :Single use fitting ϕ8, left-side mounting
J6L :Single use fitting ϕ10, left-side mounting
J5D :Single use fitting ϕ8, both-side mounting
J6D :Single use fitting ϕ10, both-side mounting

Can be selected only when the manifold type is **SH** (imperial).
MRH: With female thread, right-side mounting
MLH: With female thread, left-side mounting
MDH: With female thread, both-side mounting
MTH: With female thread, both-side mounting, intermediate piping block mounting

Transmission block specification
B1: For CC-Link (16 outputs)
B3: For CC-Link (32 outputs)
D1: For DeviceNet (16 outputs)
D3: For DeviceNet (32 outputs)
H1: For CompoNet (16 outputs)
K1: For EtherCAT (16 outputs)
K3: For EtherCAT (32 outputs)
M1: For EtherNet/IP (16 outputs) Note11
M3: For EtherNet/IP (32 outputs) Note11

Mounting specification
Blank : Direct mounting
DN : With DIN bracket (no rail)
DR : With DIN bracket, with rail

Valve type included

stn. □ F Valve size T Valve specifications □ - Note 3 - A1 / Note 4 - Note 5 - Note 10 - Note 6 - Note 7 DC24V

When manifold outlet specifications are **J**, **M**, or **L**.

Operation type
Blank: Internal pilot typeNote1
G: External pilot typeNote2

Manual override
Blank: Manual override button
R: Manual override leverNote3

Valve outlet type
A1 : With plate (When manifold outlet specification are **J**, **M**, or **L**, the valve type should be **A1**.)

Can be selected only when the manifold type is **S** and the manifold outlet spec. is "**Blank**" (metric).
FJ : With dual use fitting block (**F10**: ϕ4 and ϕ6, **F15**: ϕ6 and ϕ8)
FJ5 : With single use fitting block (**F10**: ϕ4, **F15**: ϕ6)
FJ6 : With single use fitting block (**F10**: ϕ6, **F15**: ϕ8)
FM : With female thread block (**F10**: M5X0.8, **F15**: Rc1/8)
FJ5A : With single use fitting block, 3-port normally closed (NC) (**F10**: ϕ4, **F15**: ϕ6)
FJ5B : With single use fitting block, 3-port normally open (NO) (**F10**: ϕ4, **F15**: ϕ6)
FJ6A : With single use fitting block, 3-port normally closed (NC) (**F10**: ϕ6, **F15**: ϕ8)
FJ6B : With single use fitting block, 3-port normally open (NO) (**F10**: ϕ6, **F15**: ϕ8)
FMA : With female thread block, 3-port mormally closed (NC) (**F10**: M5X0.8, **F15**: Rc1/8)
FMB : With female thread block, 3-port normally open (NO) (**F10**: M5X0.8, **F15**: Rc1/8)

Can be selected only when the manifold type is **SH** and the manifold outlet spec. is "**Blank**" (imperial).
FMH : With female thread block (**F10**:10-32UNF, **F15**: NPT1/8)
FMAH: With female thread block, 3-port mormally closed (NC) (**F10**:10-32UNF, **F15**: NPT1/8)
FMBH: With female thread block, 3-port normally open (NO) (**F10**:10-32UNF, **F15**: NPT1/8)

Manifold fitting specifications Note5
Can be selected only when the manifold type is **S** and the manifold outlet specification is **L** (with selectable fitting blocks (metric))
J5 : Manifold side outlet port with single use fitting block (**F10**: ϕ4, **F15**: ϕ6)
J6 : Manifold side outlet port with single use fitting block (**F10**: ϕ6, **F15**: ϕ8)
M : Manifold side outlet port with female thread block (**F10**: M5X0.8, **F15**: Rc1/8)
J5A : Manifold side outlet port with single use fitting block, 3-port normally closed (NC) (**F10**: ϕ4, **F15**: ϕ6)
J5B : Manifold side outlet port with single use fitting block, 3-port normally open (NO) (**F10**: ϕ4, **F15**: ϕ6)
J6A : Manifold side outlet port with single use fitting block, 3-port normally closed (NC) (**F10**: ϕ6, **F15**: ϕ8)
J6B : Manifold side outlet port with single use fitting block, 3-port normally open (NO) (**F10**: ϕ6, **F15**: ϕ8)
MA : Manifold side outlet port with female thread block, 3-port mormally closed (NC) (**F10**: M5X0.8, **F15**: Rc1/8)
MB : Manifold side outlet port with female thread block, 3-port normally open (NO) (**F10**: M5X0.8, **F15**: Rc1/8)

Port isolator
Blank : No port isolator
XSP : For 1 (P) portNote7
XSR : For 3(R2), 5(R1) portsNote7
XSA :For 1(P), 3(R2), 5(R1) portsNote7

Individual air supply and exhaust spacer Note6
Blank: No spacer
XPPM : Individual air supply spacer (with M5 female thread for F10)
XPP6 : Individual air supply spacer (with ϕ6 fitting for F15)
XPP8 : Individual air supply spacer (with ϕ8 fitting for F15)
XPRM : Individual exhaust spacer (with M5 female thread for F10)
XPR6 : Individual exhaust spacer (with ϕ6 fitting for F15)
XPR8 : Individual exhaust spacer (with ϕ8 fitting for F15)

Back pressure prevention valve Note10
Blank: No back pressure prevention valve
E2 : With back pressure prevention valve

Enter ○ in each designated station in tables on the next page.

F10, F15 Series

Easy Assembly Type Manifold Serial Transmission Type

Specifications Confirmation Form 2/2

※For specifying the valve and block-off plate to be mounted at each station, enter ○ in each applicable box below.

Mounting valve models

Mounting valve, block-off plate \ Station			1	2	3	4	5	6	7	8	9	10	11	12	13	14	15	16	17	18	19	20
F □ **T0**		2-position, for single solenoid only																				
F □ **T1**		2-position, single solenoid specification																				
F □ **T2**		2-position, double solenoid specification																				
F □ **T3**		3-position, closed center																				
F □ **T4**		3-position, exhaust center																				
F □ **T5**		3-position, pressure center																				
F □ **TA**[Note9]		Tandem 3-port (NC and NC)																				
F □ **TB**[Note9]		Tandem 3-port (NO and NO)																				
F □ **TC**[Note9]		Tandem 3-port (NC and NO)																				
F □ **LT0**		(Low current type) 2-position, for single solenoid only																				
F □ **LT1**		(Low current type) 2-position, single solenoid specification																				
F □ **LT2**		(Low current type) 2-position, double solenoid specification																				
F □ **LT3**		(Low current type) 3-position, closed center																				
F □ **LT4**		(Low current type) 3-position, exhaust center																				
F □ **LT5**		(Low current type) 3-position, pressure center																				
F □ **LTA**		(Low current type) Tandem 3-port (NC and NC)																				
F □ **LTB**		(Low current type) Tandem 3-port (NO and NO)																				
F □ **LTC**		(Low current type) Tandem 3-port (NC and NO)																				
F □ **XBPP**		Block-off plate																				
F □ **XBPP-S**		Block-off plate(wiring for single solenoid)																				
F □ **ZX**[Note12]		Intermediate piping block																				
Manual override (**-R**) Manual override lever[Note3]																						
Valve outlet type[Note4]	**FJ**	With dual use fitting block																				
	FJ5	With single use fitting block																				
	FJ6	With single use fitting block																				
	FM	With female thread block																				
	FJ5A	With single use fitting block, 3-port normally closed (NC)																				
	FJ5B	With single use fitting block, 3-port normally open (NO)																				
	FJ6A	With single use fitting block, 3-port normally closed (NC)																				
	FJ6B	With single use fitting block, 3-port normally open (NO)																				
	FMA	With female thread block, 3-port normally closed (NC)																				
	FMB	With female thread block, 3-port normally open (NO)																				
	FMH	With female thread block																				
	FMAH	With female thread block, 3-port normally closed (NC)																				
	FMBH	With female thread block, 3-port normally open (NO)																				
Manifold fitting specification-[Note5] (Manifold side outlet port)	**J5**	With single use fitting block																				
	J6	With single use fitting block																				
	M	With female thread block																				
	J5A	With single use fitting block, 3-port normally closed (NC)																				
	J5B	With single use fitting block, 3-port normally open (NO)																				
	J6A	With single use fitting block, 3-port normally closed (NC)																				
	J6B	With single use fitting block, 3-port normally open (NO)																				
	MA	With female thread block, 3-port normally closed (NC)																				
	MB	With female thread block, 3-port normally open (NO)																				
E2[Note10]		Back pressure prevention valve																				
XPPM		Individual air supply spacer (with M5 female thread for F10)																				
XPP6		Individual air supply spacer (with ϕ 6 fitting for F15)																				
XPP8		Individual air supply spacer (with ϕ 8 fitting for F15)																				
XPRM		Individual exhaust spacer (with M5 female thread for F10)																				
XPR6		Individual exhaust spacer (with ϕ 6 fitting for F15)																				
XPR8		Individual exhaust spacer (with ϕ 8 fitting for F15)																				
Port isolator (**-XSP**) For 1(P) port[Note8]																						
Port isolator (**-XSR**) For 3(R2), 5(R1) ports[Note8]																						
Port isolator (**-XSA**) For 1(P), 3(R2), 5(R1) ports[Note8]																						

Notes:1. Cannot be mounted on the external pilot manifold.
2. Cannot be mounted on the internal pilot manifold.
3. To designate a manual override lever, enter ○ in the manual override boxes of the designated stations in the above table.
4. When the manifold outlet specifications are "**Blank**", select fitting specification for each station, and enter ○ in the valve outlet type boxes of the above table. The 3-port specifications are only available in valve specifications **T0**, **T1**, and **T2**.
5. When the manifold outlet specifications are **L** (with selectable fitting), select manifold fitting specification for each station, and enter ○ in the manifold fitting specification boxes of the above table. The 3-port specifications are only available in valve specifications **T0**, **T1**, and **T2**.
6. When mounting the individual air supply or exhaust spacer, enter ○ in the spacer boxes of the desigated stations in the above table.
7. To designate a port isolator, enter ○ in one port isolator box of the designated stations in the above table.
8. Port isolators can be installed only when piping blocks are installed on both sides. In addtion, only 1 port isolator can be mounted in 1 manifold for **-SA**, or 1 each port isolator for **-SP** and **-SR** for a total of 2 locations.
When shipping, the designated port isolators are installed between the designated station and the station to its immediate left (the next smaller stn. No.).
9. Not availabale in external pilot type.
10. When mounting the back pressure prevention valve , enter ○ in the back pressure prevention valve boxes of the designated stations in the above table. Not available with the individual exhaust spacer.
11. Complies with the CE marking regulations.
12. Only one intermediate piping block can be installed. For information on the type, see page 100 for F10 or page 198 for F15.

Quantity set	Delivery

F18 Series

Monoblock Manifold A Type (Base Piping Type)

Order Date Month/ Day/ Year/

Company name	
Contact person	
Order No.	

Specifications Confirmation Form 1/2

• Fill in selections inside the thick-lined boxes.

Manifold model

F18M □ A/AH □ □

Valve units
2 to 20

Manifold outlet specification
J : With dual use fitting blocks
M : With female thread blocks
L : With selectable fitting blocks

Pilot specification
Blank: Internal pilot manifold
G : External pilot manifold

Mounting valve model

stn. □ **F18T** Valve specification □ - Note 10 - Note 3 - **A1** - □ - Note 4 - Note 5 □

Operation type
Blank: Internal pilot type[Note1]
G : External pilot type (for positive pressure)[Note2]
V : External pilot type (for vacuum)[Note2]

IP Specification
Blank : Standard
P[Note10] : IP Specification

Manual override
Blank: Manual override button
R : Manual override lever[Note3]
83 : Protruding locking type[Note11]

Voltage
DC24V
DC12V[Note8]
AC100V[Note9, 13]
AC120V
AC240V[Note11]

Wiring specification
Blank: L type plug connector, Without connector
PN : S type plug connector, Without connector
PS : S type plug connector, Lead wire length 300mm [11.8in.]
PL : L type plug connector, Lead wire length 300mm [11.8in.]
PS3 : S type plug connector, Lead wire length 3000mm [118in.]
PL3 : L type plug connector, Lead wire length 3000mm [118in.]
CPS : Pre-wired positive common terminal S type plug connector, Lead wire length 300mm [11.8in.]
CPL : Pre-wired positive common terminal L type plug connector, Lead wire length 300mm [11.8in.]
CPS3: Pre-wired positive common terminal S type plug connector, Lead wire length 3000mm [118in.]
CPL3: Pre-wired positive common terminal L type plug connector, Lead wire length 3000mm [118in.]
39L : DIN connector type with indicator[Note12]
39N : DIN connector type without indicator[Note12]

Individual air supply and exhaust spacer[Note5]
Blank: Without spacer
NP8 : Individual air supply spacer (with ϕ8 fitting)
NP0 : Individual air supply spacer (with ϕ10 fitting)
NR8 : Individual exhaust spacer (with ϕ8 fitting)
NR0 : Individual exhaust spacer (with ϕ10 fitting)

Manifold fitting specifications[Note4]
Can be selected only when the manifold outlet specification is **L** (with selectable fitting blocks (metric))
J5: Manifold side outlet port with single use ϕ8 fitting block
J6: Manifold side outlet port with single use ϕ10 fitting block

Can be selected only when the manifold type is **AH** and the manifold outlet specification is **L** (with selectable fitting blocks (metric))
MH : Manifold side outlet port with NPT1/4 female thread block

→ Enter ○ in each designated station in tables on the next page.

F18 Series

Monoblock Manifold A Type (Base Piping Type)

Order Date Month/ Day/ Year/

Company name	
Contact person	
Order No.	

Specifications Confirmation Form 2/2

※For specifying the valve and block-off plate to be mounted at each station, enter ○ in each applicable box below.

Mounting valve model

Mounting valve, block-off plate \ Station		1	2	3	4	5	6	7	8	9	10	11	12	13	14	15	16	17	18	19	20
F18T0	2-position, for single solenoid only																				
F18T1	2-position, single solenoid specification																				
F18T2	2-position, double solenoid specification																				
F18T3	3-position, closed center																				
F18T4[Note6]	3-position, exhaust center																				
F18T5[Note6]	3-position, pressure center																				
F18TA[Note7]	Tandem 3-port (NC and NC)																				
F18TB[Note7]	Tandem 3-port (NO and NO)																				
F18TC[Note7]	Tandem 3-port (NC and NO)																				
F18LT0	(Low current type) 2-position, for single solenoid only																				
F18LT1	(Low current type) 2-position, single solenoid specification																				
F18LT2	(Low current type) 2-position, double solenoid specification																				
F18LT3	(Low current type) 3-position, closed center																				
F18LT4[Note6]	(Low current type) 3-position, exhaust center																				
F18LT5[Note6]	(Low current type) 3-position, pressure center																				
F18LTA[Note7]	(Low current type) Tandem 3-port (NC and NC)																				
F18LTB[Note7]	(Low current type) Tandem 3-port (NO and NO)																				
F18LTC[Note7]	(Low current type) Tandem 3-port (NC and NO)																				
F18BP	Block-off plate																				
P [Note10]	IP Specification																				
Manual mechanism (**-R**) manual lever[Note3]																					
Manifold fitting specification[Note4] (Manifold side outlet port)	**83** Protruding locking type[Note7]																				
	J5 With single use fitting block																				
	J6 With single use fitting block																				
	MH With female thread block																				
NP8	Individual air supply spacer (with ϕ 8 fitting)																				
NP0	Individual air supply spacer (with ϕ 10 fitting)																				
NR8	Individual exhaust spacer (with ϕ 8 fitting)																				
NR0	Individual exhaust spacer (with ϕ 10 fitting)																				

Notes:1. Cannot be mounted on the external pilot manifold.
2. Cannot be mounted on the internal pilot manifold.
3. To designate a manual override lever, enter ○ in the manual override boxes of the designated station in the above table.
4. When the manifold outlet specifications are **L** (with selectable fitting), select fitting specification for each station, and enter ○ in the manifold fitting specification boxes of the above table.
The 3-port specifications are only available in valve specification **T0**, **T1**, and **T2**.
5. When mounting the individual air supply or exhaust spacer or stop valve, enter ○ in the spacer or stop valve boxes of the designated stations in the above table.
6. Not available in the vacuum valves.
7. Not available in external pilot type and vacuum valves.
8. Not available in low-current type.
9. Not available in low-current type and tandem 3-port valves.
10. The IP65 protective structure around an electrical device that prevents the infiltration of solid foreign material and water from outside.
11. Only for wiring specification **-39**□.
12. Not available for valve specification **T1**. In addition, the valve is used only as a double solenoid for **T2**.
13. Not available with DIN connectors (**-39**□).

Quantity set	Delivery

F18 Series

Monoblock Manifold F Type (Direct Piping Type)

Order Date Month/ Day/ Year/

Company name	
Contact person	
Order No.	

Specifications Confirmation Form 1/2

• Fill in selections inside the thick-lined boxes.

Manifold model

F18M □ **F** / **FH**

Valve units
2 to 20

Mounting valve model

stn. □ **F18T** Valve specification - [Note 6] - [Note 1] - [Note 2] - [ ] - [Note 3] - [ ]

IP Specification
Blank : Standard
P[Note6] : IP Specification

Manual override
Blank: Manual override button
R : Manual override lever[Note1]
83 : Protruding locking type[Note7]

Valve outlet type[Note2]
Can be selected only when the manifold type is **F** (metric) .
FJ :With dual use ϕ8 and ϕ10 fitting block
FJ5 :With single use ϕ8 fitting block
FJ6 :With single use ϕ10 fitting block
FM :With Rc 1/4 female thread block
Can be selected only when the manifold type is **F** (imperial).
FMH :With NPT1/4 female thread block

Wiring specification
Blank: L type plug connector, Without connector
PN : S type plug connector, Without connector
PS : S type plug connector, Lead wire length 300mm [11.8in.]
PL : L type plug connector, Lead wire length 300mm [11.8in.]
PS3 : S type plug connector, Lead wire length 3000mm [118in.]
PL3 : L type plug connector, Lead wire length 3000mm [118in.]
CPS : Pre-wired positive common terminal S type plug connector, Lead wire length 300mm [11.8in.]
CPL : Pre-wired positive common terminal L type plug connector, Lead wire length 300mm [11.8in.]
CPS3: Pre-wired positive common terminal S type plug connector, Lead wire length 3000mm [118in.]
CPL3: Pre-wired positive common terminal L type plug connector, Lead wire length 3000mm [118in.]
39L : DIN connector type with indicator[Note8]
39N : DIN connector type without indicator[Note8]

Individual air supply and exhaust spacer, stop valve[Note3]
Blank: No spacer and no stop valve
NP8 : Individual air supply spacer (with ϕ8 fitting)
NP0 : Individual air supply spacer (with ϕ10 fitting)
NR8 : Individual exhaust spacer (with ϕ8 fitting)
NR0 : Individual exhaust spacer (with ϕ10 fitting)

Voltage
DC24V
DC12V[Note4]
AC100V[Note5, 9]
AC120
AC240[Note7]

→ Enter ○ in each designated station in tables on the next page.

F18 Series

Monoblock Manifold F Type (Direct Piping Type)

Order Date Month/ Day/ Year/

Company name	
Contact person	
Order No.	

Specifications Confirmation Form 2/2

※For specifying the valve and block-off plate to be mounted at each station, enter ○ in each applicable box below.

Mounting valve model

Mounting valve, block-off plate \ Station		1	2	3	4	5	6	7	8	9	10	11	12	13	14	15	16	17	18	19	20
F18T0	2-position, for single solenoid only																				
F18T1	2-position, single solenoid specification																				
F18T2	2-position, double solenoid specification																				
F18T3	3-position, closed center																				
F18T4	3-position, exhaust center																				
F18T5	3-position, pressure center																				
F18TA	Tandem 3-port (NC and NC)																				
F18TB	Tandem 3-port (NO and NO)																				
F18TC	Tandem 3-port (NC and NO)																				
F18LT0	(Low current type) 2-position, for single solenoid only																				
F18LT1	(Low current type) 2-position, single solenoid specification																				
F18LT2	(Low current type) 2-position, double solenoid specification																				
F18LT3	(Low current type) 3-position, closed center																				
F18LT4	(Low current type) 3-position, exhaust center																				
F18LT5	(Low current type) 3-position, pressure center																				
F18LTA	(Low current type) Tandem 3-port (NC and NC)																				
F18LTB	(Low current type) Tandem 3-port (NO and NO)																				
F18LTC	(Low current type) Tandem 3-port (NC and NO)																				
F18BP	Block-off plate																				
P Note6	IP Specification																				
Manual mechanism (**-R**) manual lever Note1																					
Valve type Note2	**83** Protruding locking type Note7																				
	FJ With dual use fitting block																				
	FJ5 With single use fitting block																				
	FJ6 With single use fitting block																				
	FM With female thread block																				
	FMH With female thread block																				
NP8	Individual air supply spacer (with ϕ 8 fitting)																				
NP0	Individual air supply spacer (with ϕ 10 fitting)																				
NR8	Individual exhaust spacer (with ϕ 8 fitting)																				
NR0	Individual exhaust spacer (with ϕ 10 fitting)																				

Notes:1. To designate a manual override lever, enter ○ in the manual override boxes of the designated station in the above table.
2. Select valve outlet type for each station, and enter ○ in the valve outlet type boxes of the above table. Note that the three port type only supports the **T0**, **T1**, and **T2** valve type.
3. When mounting the individual air supply or exhaust spacer or stop valve, enter ○ in the spacer or stop valve boxes of the designated stations in the above table.
4. Not available in low-current type.
5. Not available in low-current type and tandem 3-port valves.
6. The IP65 protective structure around an electrical device that prevents the infiltration of solid foreign material and water from outside.
7. Only for wiring specification **-39**□.
8. Not available for valve specification **T1**. In addition, the valve is used omly as a double solenoid for **T2**.
9. Not available with DIN connectors (**-39**□).

Quantity set	Delivery

F18 Series

Split Manifold Non-Plug-in Type

Specifications Confirmation Form 1/2

Order Date Month/ Day/ Year/

Company name	
Contact person	
Order No.	

• Fill in selections inside the thick-lined boxes.

Manifold model

F18M □ N/NH □ □ - □

Valve units
2 to 20

Pilot specification
Blank: Internal pilot manifold
G : External pilot manifold

Manifold outlet specification
J : With dual use fitting blocks
M : With female thread blocks
L : With selectable fitting blocks
Blank: With plates (direct piping type)

Piping block specification (air supply and exhaust)
Can be selected only when the manifold type is **N** (metric) .
JR: With dual use fitting, right-side mounting
JL: With dual use fitting, left-side mounting
JD: With dual use fitting, both-side mounting
MR: With female thread, right-side mounting
ML: With female thread, left-side mounting
MD: With female thread, both-side mounting

Can be selected only when the manifold type is **NH** (imperial) .
MRH: With female thread, right-side mounting
MLH: With female thread, left-side mounting
MDH: With female thread, both-side mounting

Mounting valve model

stn. □ F18T Valve specification □ - Note 12 - Note 3 - A1 - □ - Note 5 - Note 6 - Note 7 □

When manifold outlet specifications are **J**, **M**, or **L**.

Note4

Operation type
Blank: Internal pilot type[Note1]
G : External pilot type[Note2]

IP Specification
Blank : Standard
P[Note12] : IP Specification

Manual override
Blank: Manual override button
R : Manual override lever[Note3]

Voltage
DC24V
DC12V[Note10]
AC100V[Note11]

Port isolator
Blank: No port isolator
SP : For 1(P) port[Note7]
SR : For 3(R2), 5(R1) ports[Note7]
SA : For 1(P), 3(R2), 5(R1) ports[Note7]

Individual air supply and exhaust spacer[Note6]
Blank: No spacer
NP8 : Individual air supply spacer (with ϕ8 fitting)
NP0 : Individual air supply spacer (with ϕ10 fitting)
NR8 : Individual exhaust spacer (with ϕ8 fitting)
NR0 : Individual exhaust spacer (with ϕ10 fitting)

Manifold fitting specifications[Note5]
Can be selected only when the manifold outlet specification is **L** (with selectable fitting blocks (metric))
J5: Manifold side outlet port with single use ϕ8 fitting block
J6: Manifold side outlet port with single use ϕ10 fitting block

Wiring specification
PN: S type plug connector, Without connector
PS: S type plug connector, Lead wire length 300mm [11.8in.]
PS3: S type plug connector, Lead wire length 3000mm [118in.]
CPS: Pre-wired positive common terminal S type plug connector, Lead wire length 300mm [11.8in.]
CPS3: Pre-wired positive common terminal S type plug connector, Lead wire length 3000mm [118in.]

Valve outlet type
A1: With plate (When manifold outlet specification are **J**, **M**, or **L**, the valve type should be **A1**.)
FJ: With dual use ϕ8 and ϕ10 fitting block [Note4]
FJ5: With single use ϕ8 fitting block [Note4]
FJ6: With single use ϕ10 fitting block [Note4]
FM: With Rc1/4 female thread block [Note4]

Can be selected only when the manifold type is **NH** and the manifold outlet specification is "**Blank**" (imperial) .
FMH: With NPT1/4 female thread block

Enter ○ in each designated station in tables on the next page.

F18 Series

Split Manifold Non-Plug-in Type

Specifications Confirmation Form 2/2

※For specifying the valve and block-off plate to be mounted at each station, enter ○ in each applicable box below.

Mounting valve models	Mounting valve, block-off plate \ Station		1	2	3	4	5	6	7	8	9	10	11	12	13	14	15	16	17	18	19	20
	F18T0	2-position, for single solenoid only																				
	F18T1	2-position, single solenoid specification																				
	F18T2	2-position, double solenoid specification																				
	F18T3	3-position, closed center																				
	F18T4	3-position, exhaust center																				
	F18T5	3-position, pressure center																				
	F18TA[Note9]	Tandem 3-port (NC and NC)																				
	F18TB[Note9]	Tandem 3-port (NO and NO)																				
	F18TC[Note9]	Tandem 3-port (NC and NO)																				
	F18LT0	(Low current type) 2-position, for single solenoid only																				
	F18LT1	(Low current type) 2-position, single solenoid specification																				
	F18LT2	(Low current type) 2-position, double solenoid specification																				
	F18LT3	(Low current type) 3-position, closed center																				
	F18LT4	(Low current type) 3-position, exhaust center																				
	F18LT5	(Low current type) 3-position, pressure center																				
	F18LTA[Note9]	(Low current type) Tandem 3-port (NC and NC)																				
	F18LTB[Note9]	(Low current type) Tandem 3-port (NO and NO)																				
	F18LTC[Note9]	(Low current type) Tandem 3-port (NC and NO)																				
	F18BPN	Block-off plate																				
	P [Note12]	IP Specification																				
	Manual override (**-R**) Manual override lever[Note3]																					
	Valve outlet type[Note4]	**A1** With plate																				
		FJ With dual use fitting block																				
		FJ5 With single use fitting block																				
		FJ6 With single use fitting block																				
		FM With female thread block																				
		FMH With female thread block																				
	Manifold fitting specification[Note5] (Manifold side outlet port)	**J5** With single use fitting block																				
		J6 With single use fitting block																				
		MH With female thread block																				
	NP8 Individual air supply spacer (with ϕ 8 fitting)																					
	NP0 Individual air supply spacer (with ϕ 10 fitting)																					
	NR8 Individual exhaust spacer (with ϕ 8 fitting)																					
	NR0 Individual exhaust spacer (with ϕ 10 fitting)																					
	Port isolator (**-SP**) For 1(P) port[Note8]																					
	Port isolator (**-SR**) For 3(R2), 5(R1) ports[Note8]																					
	Port isolator (**-SA**) For 1(P), 3(R2), 5(R1) ports[Note8]																					

Notes:1. Cannot be mounted on the external pilot manifold.
2. Cannot be mounted on the internal pilot manifold.
3. To designate a manual override lever, enter ○ in the manual override boxes of the designated stations in the above table.
4. When the manifold outlet specifications are "**Blank**", select fitting specification for each station, and enter ○ in the valve outlet type boxes of the above table.
The 3-port specifications are only available in valve specifications **T0**, **T1**, and **T2**.
5. When the manifold outlet specifications are **L** (with selectable fitting), select manifold fitting specification for each station, and enter ○ in the manifold fitting specification boxes of the above table.
The 3-port specifications are only available in valve specifications **T0**, **T1**, and **T2**.
6. When mounting the individual air supply or exhaust spacer, enter ○ in the one spacer box of the desigated stations in the above table.
7. To designate a port isolator box of the designated station, enter ○ in the port isolator box in the above table.
8. Port isolators can be installed only when piping blocks are mounted on both sides. In addtion, only 1 port isolator can be mounted in 1 manifold for **-SA**, or 1 each port isolator dor **-SP** and **-SR** for a total of 2 locations.
When shipping, the designated port isolators are mounted between the designated station and the station to its immediate left (the next smaller stn. No.).
9. Not availabale in external pilot type.
10. Not available in low-current type.
11. Not available in low-current type and tandem 3-port valves.
12. The IP65 protective structure around an electrical device that prevents the infiltration of solid foreign material and water from outside.

Quantity	set	Delivery

F18 Series

Split Manifold Plug-in Type

Specifications Confirmation Form 1/2

Order Date Month/ Day/ Year/

Company name	
Contact person	
Order No.	

• Fill in selections inside the thick-lined boxes.

Manifold model

F18M □ P/PH □ □ - □ - □ - □ - □ □

Voltage
DC12V[Note9]
DC24V
AC100V[Note9]
AC120V[Note9]

Wiring position (wiring block)
Blank: Left-side mounting
R : Right-side mounting

Wiring connection specification
Blank: Packed wiring
W : Double wiring

Wiring specification
F100 : Flat cable connector 10-pin
F101 : Flat cable connector 10-pin
F200 : Flat cable connector 20-pin
F201 : Flat cable connector 20-pin
F260 : Flat cable connector 26-pin
(M2.6 mounting screws)
D250 : D-sub connector 25-pin[Note12]
D251 : D-sub connector 25-pin[Note12]
(4-40UNC mounting screws)
D250U : D-sub connector 25-pin[Note13]
D251U : D-sub connector 25-pin[Note13]
D370NU : D-sub connector 37-pin without power terminal[Note13]

T200 : Terminal block (19 terminals, M3 screws)

Piping block specification (air supply and exhaust)
Can be selected only when the manifold type is **P** (metric) .
JR : With dual use fitting, right-side mounting
JL : With dual use fitting, left-side mounting
JD : With dual use fitting, both-side mounting
MR : With female thread, right-side mounting
ML : With female thread, left-side mounting
MD : With female thread, both-side mounting

Can be selected only when the manifold type is **PH** (imperial) .
MRH: With female thread, right-side mounting
MLH: With female thread, left-side mounting
MDH: With female thread, both-side mounting

Pilot specification
Blank: Internal pilot manifold
G : External pilot manifold

Manifold outlet specification
J : With dual use fitting blocks
M : With female thread blocks
L : With selectable fitting blocks
Blank: With plates (direct piping type)

Valve units
2 to □[Note]

Note: For the maximum number of units, check the table for mximum number of valve units by wiring specification on page 84.

Mounting valve model

stn. □ F18T Valve specification □ - Note 3 - A1 - Note 5 - Note 6 - Note 7 □

When manifold outlet specifications are **J**, **M**, or **L**.

Note4

Operation type
Blank: Internal pilot type[Note1]
G : External pilot type[Note2]

Manual override
Blank: Manual override button
R : Manual override lever[Note3]

Valve outlet type
A1 : With plate (When the manifold outlet specification are **J**, **M**, or **L**, the valve type should be **A1**.)
Can be selected only when the manifold type is **P** and manifold outlet specification is "**Blank**" (metric) .
FJ: With dual use ϕ8 and ϕ10 fitting block[Note4]
FJ5: With single use ϕ8 fitting block[Note4]
FJ6: With single use ϕ10 fitting block[Note4]
FM: With Rc1/4 female thread block[Note4]

Can be selected only when the manifold type is **PH** and manifold outlet specification is "**Blank**" (imperial) .
FMH: With NPT1/4 female thread block

Voltage
DC12V[Note9]
DC24V
AC100V[Note9]
AC120V[Note9]

Port isolator
Blank: No port isolator
SP : For 1(P) port
SR : For 3(R2), 5(R1) ports
SA : For 1(P), 3(R2), 5(R1) ports

Individual air supply and exhaust spacer[Note6]
Blank: No spacer
PP8 : Individual air supply spacer (with ϕ8 fitting)
PP0 : Individual air supply spacer (with ϕ10 fitting)
PR8 : Individual exhaust spacer (with ϕ8 fitting)
PR0 : Individual exhaust spacer (with ϕ10 fitting)

Manifold fitting specifications[Note5]
Can be selected only when manifold type is **P** and manifold outlet specification is **L** (with selectable fitting blocks (metric))
J5 : Manifold side outlet port with single use ϕ8 fitting block
J6 : Manifold side outlet port with single use ϕ10 fitting block

Can be selected only when manifold type is **PH** and manifold outlet specification is **L** (with selectable fitting blocks (imperial))
MH : With NPT1/4 female thread block

Enter ○ in each designated station in tables on the next page.

F18 Series

Split Manifold Plug-in Type

Specifications Confirmation Form 2/2

※For specifying the valve and block-off plate to be mounted at each station, enter ○ in each applicable box below.

Mounting valve models

Mounting valve, block-off plate \ Station		1	2	3	4	5	6	7	8	9	10	11	12	13	14	15	16	17	18	19	20
F18T0	2-position, for single solenoid only																				
F18T1	2-position, single solenoid specification																				
F18T2	2-position, double solenoid specification																				
F18T3	3-position, closed center																				
F18T4	3-position, exhaust center																				
F18T5	3-position, pressure center																				
F18TA[Note11]	Tandem 3-port (NC and NC)																				
F18TB[Note11]	Tandem 3-port (NO and NO)																				
F18TC[Note11]	Tandem 3-port (NC and NO)																				
F18LT0	(Low current type) 2-position, for single solenoid only																				
F18LT1	(Low current type) 2-position, single solenoid specification																				
F18LT2	(Low current type) 2-position, double solenoid specification																				
F18LT3	(Low current type) 3-position, closed center																				
F18LT4	(Low current type) 3-position, exhaust center																				
F18LT5	(Low current type) 3-position, pressure center																				
F18LTA[Note11]	(Low current type) Tandem 3-port (NC and NC)																				
F18LTB[Note11]	(Low current type) Tandem 3-port (NO and NO)																				
F18LTC[Note11]	(Low current type) Tandem 3-port (NC and NO)																				
F18BPP	Block-off plate																				
F18BPP-1W	Block-off plate (wiring for single solenoid)																				
Manual override (**-R**) Manual override lever[Note3]																					
Valve outlet type-[Note4]	**FJ** With dual use fitting block																				
	FJ5 With single use fitting block																				
	FJ6 With single use fitting block																				
	FM With female thread block																				
	FMH With female thread block																				
Manifold fitting specification[Note5] (Manifold side outlet port)	**J5** With single use fitting block																				
	J6 With single use fitting block																				
	MH With female thread block																				
PP8	Individual air supply spacer (with ϕ 8 fitting)																				
PP0	Individual air supply spacer (with ϕ 10 fitting)																				
PR8	Individual exhaust spacer (with ϕ 8 fitting)																				
PR0	Individual exhaust spacer (with ϕ 10 fitting)																				
Port isolator (**-SP**) For 1(P) port[Note8]																					
Port isolator (**-SR**) For 3(R2), 5(R1) ports[Note8]																					
Port isolator (**-SA**) For 1(P), 3(R2), 5(R1) ports[Note8]																					

Notes:
1. Cannot be mounted on the external pilot manifold.
2. Cannot be mounted on the internal pilot manifold.
3. To designate a manual override lever, enter ○ in the manual override boxes of the designated stations in the above table.
4. When the manifold outlet specifications are "**Blank**", select fitting specification for each station, and enter ○ in the valve outlet type boxes of the above table.
   The 3-port specifications are only available in valve specifications **T0**, **T1**, and **T2**.
5. When the manifold outlet specifications are **L** (with selectable fitting), select manifold fitting specification for each station, and enter ○ in the manifold fitting specification boxes of the above table
   The 3-port specifications are only available in valve specifications **T0**, **T1**, and **T2**.
6. When mounting the individual air supply or exhaust spacer, enter ○ in the spacer boxes of the desigated stations in the above table.
7. To designate a port isolator, enter ○ in one port isolator box of the designated stations in the above table.
8. Port isolators can be installed only when piping blocks are mounted on both sides. In addtion, only 1 port isolator can be mounted in 1 manifold for **-SA**, or 1 each port isolator for **-SP** and **-SR** for a total of 2 locations.
   When shipping, the designated port isolators are installed between the designated station and the station to its immediate left (the next smaller stn. No.).
9. Not available in low-current type.
10. AC100V and AC120V can only be used when wiring specifications are **-D250**□, **-D251**□ (D-sub connector), or **-T200** (terminal). In addition, not available in low-current type and tandem 3-port valves
11. Not availabale in external pilot type.
12. Can be selected only when the manifold type is **P**.
13. Can be selected only when the manifold type is **PH**.

Quantity set	Delivery

F18 Series

Split Manifold Serial Transmission Type

Specifications Confirmation Form 1/2

Order Date Month/ Day/ Year/

Company name	
Contact person	
Order No.	

• Fill in selections inside the thick-lined boxes.

Manifold model

F18M□S□□-□□-□□-□-□

Valve units
2 to □[Note]

Note: For the maximum number of units, check the table for mximum number of valve units by wiring specification on page 88.

Manifold outlet specification
J : With dual use fitting blocks
M : With female thread blocks
L : With selectable fitting blocks
Blank: With plates (direct piping type)

Pilot specification
Blank: Internal pilot manifold
G : External pilot manifold

Piping block specification (air supply and exhaust)
Can be selected only when the manifold type is **S** (metric) .
JR : With dual use fitting, right-side mounting
JL : With dual use fitting, left-side mounting
JD : With dual use fitting, both-side mounting
MR : With female thread, right-side mounting
ML : With female thread, left-side mounting
MD : With female thread, both-side mounting

Can be selected only when the manifold type is **SH** (imperial) .
MRH: With female thread, right-side mounting
MLH: With female thread, left-side mounting
MDH: With female thread, both-side mounting

Transmission block specification
31 : For OMRON B7A Link Terminal (standard)
32 : For OMRON B7A Link Terminal (high speed)
B1: For CC-Link (16 outputs)
H1: For CompoNet (16 outputs)[Note11]
D1: For DeviceNet (16 outputs)
D3: For DeviceNet (32 outputs)
K1: For EtherCAT (16 outputs)
K3: For EtherCAT (32 outputs)
M1: For EtherNet/IP (16 outputs) [Note10]
M3: For EtherNet/IP (32 outputs) [Note10]

Wiring connection specification
Blank: Packed wiring
W : Double wiring

Wiring position (wiring block)
Blank: Left-side mounting
R : Right-side mounting

Mounting valve model

stn. □ F18T Valve specification □ - Note 3 - A1 - Note 5 - Note 6 - Note 7 DC24V

When manifold outlet specifications are **J**, **M**, or **L**.

Note4

Operation type
Blank: Internal pilot type[Note1]
G : External pilot type[Note2]

Manual override
Blank: Manual override button
R : Manual override lever[Note3]

Valve outlet type
A1 : With plate (When manifold outlet specification are **J**, **M**, or **L**, the valve type should be **A1**.)
Can be selected only when the manifold type is **S** and the manifold outlet specification is "**Blank**".
FJ: With dual use ϕ8 and ϕ10 fitting block[Note4]
FJ5: With single use ϕ8 fitting block[Note4]
FJ6: With single use ϕ10 fitting block[Note4]
FM: With Rc1/4 female thread block[Note4]

Port isolator
Blank: No port isolator
SP : For 1(P) port[Note7]
SR : For 3(R2), 5(R1) ports[Note7]
SA : For 1(P), 3(R2), 5(R1) ports[Note7]

Individual air supply and exhaust spacer[Note6]
Blank: No spacer
PP8 : Individual air supply spacer (with ϕ8 fitting)
PP0 : Individual air supply spacer (with ϕ10 fitting)
PR8 : Individual exhaust spacer (with ϕ8 fitting)
PR0 : Individual exhaust spacer (with ϕ10 fitting)

Manifold fitting specifications[Note5]
Can be selected only when the manifold type is **S** and the manifold outlet specification is **L** (with selectable fitting blocks (metric))
J5 : Manifold side outlet port with single use ϕ8 fitting block
J6 : Manifold side outlet port with single use ϕ10 fitting block

Can be selected only when the manifold type is **SH** and the manifold outlet specification is **L** (with selectable fitting blocks (imperial))
MH : with NPT1/4 female thread block

Enter ○ in each designated station in tables on the next page.

F18 Series

Split Manifold Serial Transmission Type

Specifications Confirmation Form 2/2

※For specifying the valve and block-off plate to be mounted at each station, enter ○ in each applicable box below.

Mounting valve models	Mounting valve, block-off plate \ Station	1	2	3	4	5	6	7	8	9	10	11	12	13	14	15	16	17	18	19	20
	F18T0 2-position, for single solenoid only																				
	F18T1 2-position, single solenoid specification																				
	F18T2 2-position, double solenoid specification																				
	F18T3 3-position, closed center																				
	F18T4 3-position, exhaust center																				
	F18T5 3-position, pressure center																				
	F18TA[Note9] Tandem 3-port (NC and NC)																				
	F18TB[Note9] Tandem 3-port (NO and NO)																				
	F18TC[Note9] Tandem 3-port (NC and NO)																				
	F18LT0 (Low current type) 2-position, for single solenoid only																				
	F18LT1 (Low current type) 2-position, single solenoid specification																				
	F18LT2 (Low current type) 2-position, double solenoid specification																				
	F18LT3 (Low current type) 3-position, closed center																				
	F18LT4 (Low current type) 3-position, exhaust center																				
	F18LT5 (Low current type) 3-position, pressure center																				
	F18LTA[Note9] (Low current type) Tandem 3-port (NC and NC)																				
	F18LTB[Note9] (Low current type) Tandem 3-port (NO and NO)																				
	F18LTC[Note9] (Low current type) Tandem 3-port (NC and NO)																				
	F18BPP Block-off plate																				
	Manual override (**-R**) Manual override lever[Note3]																				
	Valve outlet type[Note4] **FJ** With dual use fitting block																				
	Valve outlet type[Note4] **FJ5** With single use fitting block																				
	Valve outlet type[Note4] **FJ6** With single use fitting block																				
	Valve outlet type[Note4] **FM** With female thread block																				
	Valve outlet type[Note4] **FMH** With female thread block																				
	Manifold fitting specification[Note5] (Manifold side outlet port) **J5** With single use fitting block																				
	Manifold fitting specification[Note5] (Manifold side outlet port) **J6** With single use fitting block																				
	Manifold fitting specification[Note5] (Manifold side outlet port) **MH** With female thread block																				
	PP8 Individual air supply spacer (with ϕ 8 fitting)																				
	PP0 Individual air supply spacer (with ϕ 10 fitting)																				
	PR8 Individual exhaust spacer (with ϕ 8 fitting)																				
	PR0 Individual exhaust spacer (with ϕ 10 fitting)																				
	Port isolator (**-SP**) For 1(P) port[Note8]																				
	Port isolator (**-SR**) For 3(R2), 5(R1) ports[Note8]																				
	Port isolator (**-SA**) For 1(P), 3(R2), 5(R1) ports[Note8]																				

Notes:1. Cannot be mounted on the external pilot manifold.
2. Cannot be mounted on the internal pilot manifold.
3. To designate a manual override lever, enter ○ in the manual override boxes of the designated stations in the above table.
4. When the manifold outlet specifications are "**Blank**", select fitting specification for each station, and enter ○ in the valve outlet type boxes of the above table.
The 3-port specifications are only available in valve specifications **T0**, **T1**, and **T2**.
5. When the manifold outlet specifications are **L** (with selectable fitting), select manifold fitting specification for each station, and enter ○ in the manifold fitting specification boxes of the above table.
The 3-port specifications are only available in valve specifications **T0**, **T1**, and **T2**.
6. When mounting the individual air supply or exhaust spacer, enter ○ in the spacer boxes of the desigated stations in the above table.
7. To designate a port isolator, enter ○ in one port isolator box of the designated stations in the above table.
8. Port isolators can be installed only when piping blocks are installed on both sides. In addtion, only 1 port isolator can be mounted in 1 manifold for **-SA**, or 1 each port isolator for **-SP** and **-SR** for a total of 2 locations.
When shipping, the designated port isolators are installed between the designated station and the station to its immediate left (the next smaller stn. No.).
9. Not availabale in external pilot type.
10. Complies with the CE marking regulations.
11. The **-H1** (for CompoNet (16 outputs)) transmission block is mountable on the left side only.

Quantity set	Delivery

Notification of Changes to the Solenoid Valves F10 and F15 Series Monoblock Manifold

1. Changes in the monoblock manifold (aluminum manifold) gasket

Along with the back pressure prevention valve becoming an option, the gasket configuration has also been changed.
Note that a new gasket type cannot be fitted onto and used on an old type manifold.
When replacing a mounted valve, order an old type gasket if you need to replace the gasket of an old type manifold.
(Old type gasket model for the F10 Series: **Q-F10Z-GS1**, old type gasket model for the F15 Series: **Q-F15Z-GS1**)

For new type manifold

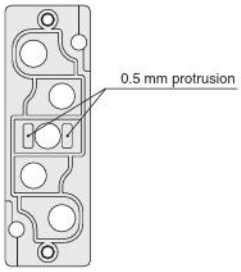

For old type manifold

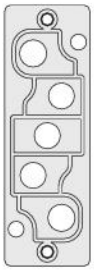

Mounted valve	New/old type gasket	New type manifold	Old type manifold
New type valve	New type gasket	○	×
	Old type gasket	×	○
Old type valve	New type gasket	○	×
	Old type gasket	×	○

Note:There is no gasket replacement for a split manifold or serial transmission compatible manifold.

2. Determining whether a monoblock manifold A type or F type, or PC board manifold A type or F type is an old type or new type

New type manifold

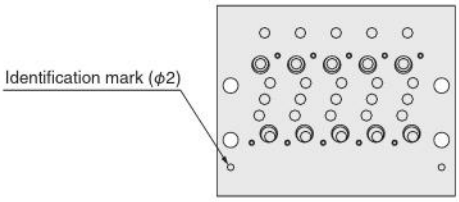

Old type manifold

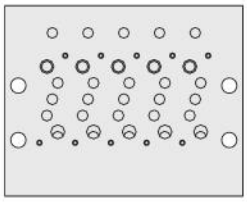

If you have any questions regarding the above, contact your nearest KOGANEI sales office.

MEMO

MEMO

Limited Warranty

KOGANEI CORP. warrants its products to be free from defects in material and workmanship subject to the following provisions.

Warranty Period The warranty period is 180 days from the date of delivery.

Koganei Responsibility If a defect in material or workmanship is found during the warranty period, KOGANEI CORP. will replace any part proved defective under normal use free of charge and will provide the service necessary to replace such a part.

Limitations

- This warranty is in lieu of all other warranties, expressed or implied, and is limited to the original cost of the product and shall not include any transportation fee, the cost of installation or any liability for direct, indirect or consequential damage or delay resulting from the defects.
- KOGANEI CORP. shall in no way be liable or responsible for injuries or damage to persons or property arising out of the use or operation of the manufacturer's product.
- This warranty shall be void if the engineered safety devices are removed, made inoperative or not periodically checked for proper functioning.
- Any operation beyond the rated capacity, any improper use or application, or any improper installation of the product, or any substitution upon it with parts not furnished or approved by KOGANEI CORP., shall void this warranty.
- This warranty covers only such items supplied by KOGANEI CORP. The products of other manufacturers are covered only by such warranties made by those original manufacturers, even though such items may have been included as the components.

The specifications are subject to change without notice.

URL http://www.koganei.co.jp

E-mail: overseas@koganei.co.jp

KOGANEI

KOGANEI CORPORATION

OVERSEAS DEPARTMENT
3-11-28, Midori-cho, Koganei City, Tokyo 184-8533, Japan
Tel: 81-42-383-7271 Fax: 81-42-383-7276

KOGANEI INTERNATIONAL AMERICA, INC.
48860 Milmont Drive, suite 108C, Fremont, Calfornia 94538
Tel : 1-510-744-1626 Fax : 1-510-744-1676

SHANGHAI KOGANEI INTERNATIONAL TRADING CORPORATION
Room 2601-2602, Tongda Venture Building No.1, Lane 600, Tianshan Road, Shanghai, China(200051)
Tel: 86-21-6145-7313 Fax: 86-21-6145-7323

TAIWAN KOGANEI TRADING CO., LTD.
Rm. 2, 16F., No88, Sec. 2, Zhongxiao E. Rd., Zhongzheng Dist., Taipei City 100, Taiwan (ROC)
Tel: 886-2-2393-2717 Fax: 886-2-2393-2719

KOGANEI KOREA CO., LTD.
A-3001, Heungdeck IT Valley Bldg., Heungkeck 1-ro, 13, Giheung-gu, Yongin-si, Gyeonggi-do, 446-908, KOREA
Tel: 82-31-246-0414 Fax: 82-31-246-0415

KOGANEI (THAILAND) CO., LTD.
555 Rasa Tower 1, 12th Floor, Unit 1202 and 1207, Phaholyothin Road, Chatuchak,Chatuchak, Bangkok 10900 Thailand
Tel: 66-2-937-4250 Fax: 66-2-937-4254

KOGANEI AUTOMATION (MALAYSIA) SDN.BHD.
Suite 29-2, Level 29, Menara 1MK, No.1, Jalan Kiara, Mont Kiara 50480, Kuala Lumpur, Malaysia
Tel: 60-12-537-7086

KOGANEI ASIA PTE. LTD.
69 Ubi Road 1, #05-18 Oxley Bizhub, Singapore 408731
Tel: 65-6293-4512 Fax: 65-6293-4513

6/'22 300 ITAB

©KOGANEI CORP. PRINTED IN JAPAN