KOGANEI

Catalog No.BK-V0014

http://www.koganei.co.jp

NEW Products

# Solenoid Valves F Series

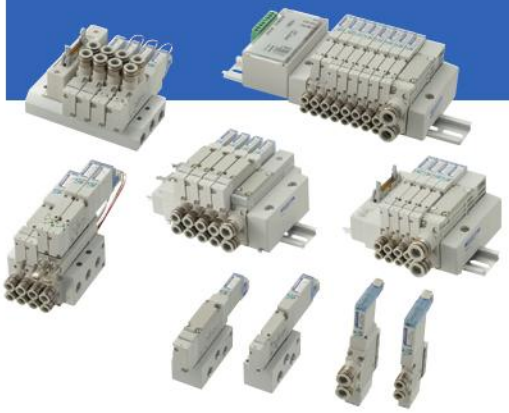

# SOLENOID VALVES F SERIES
# F10, F15, F18 SERIES

## Contents


Features — 2
Product Range — 5
Energy-Saving Proposal Using the Solenoid Valve F10, F15 Series — 8
Notification of Changes to the Solenoid Valves F10 and F15 Series Specifications — 9
Safety Precautions — 13
Operating Principles and Symbols — 16
Handling Instructions and Precautions — 18
Manifold Unit Adding Procedure — 28
Product Configurations for the F Series Serial Transmission Compatible Manifolds — 37
Specifications of Serial Transmission Compatible Manifolds — 38

Single Valve Unit — F10,15 SERIES 44 / F18 SERIES 72
Monoblock Manifold A Type (Base Piping Type) — F10,15 SERIES 46 / F18 SERIES 74
Monoblock Manifold F Type (Direct Piping Type) — F10,15 SERIES 48 / F18 SERIES 76
Monoblock Manifold A Type, Wire-saving Type (Base Piping Type) — 50
Monoblock Manifold F Type, Wire-saving Type (Direct Piping Type) — 52
PC Board Manifold A Type (Base Piping Type) — 54
PC Board Manifold F Type (Direct Piping Type) — 58
Split Manifold Non-plug-in Type — F10,15 SERIES 60 / F18 SERIES 78
Split Manifold Plug-in Type — F10,15 SERIES 64 / F18 SERIES 82
Serial Transmission Compatible Manifold — F10,15 SERIES 68 / F18 SERIES 86

SOLENOID VALVES F10 SERIES — 105
Specifications — 106
Dimentions — 111

SOLENOID VALVES F15 SERIES — 137
Specifications — 138
Dimentions — 144

SOLENOID VALVES F18 SERIES — 171
Specifications — 172
Dimentions — 177


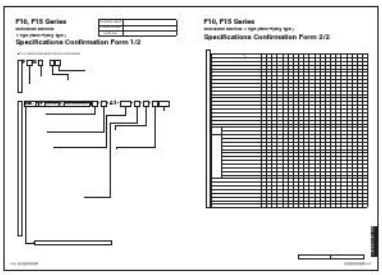


F Series Specifications Confirmation Form — 199

# Solenoid Valves F Series

Environmentally friendly RoHS Compliant product!

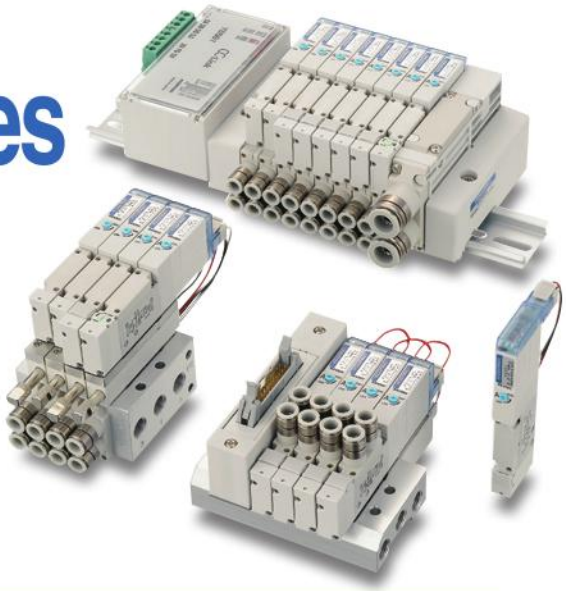

## The F Series is the Result of a Focus on Usability.

## 1 Single or double dual use valve

- With the F series 2-position valves, you can use a manual override to select either the single solenoid valve or the double solenoid valve function.

Note: A dedicated single solenoid valve is also available.

※2-position valve
(Excluding T0 type)

Single solenoid position

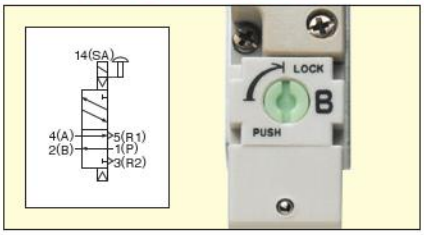


Double solenoid position

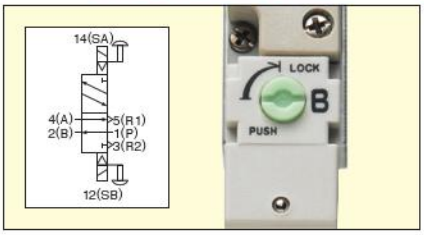


## 2 Employs dual use fittings

- Koganei's unique dual use fittings can be connected to two different types of tubes with differing outer diameters.
- No need to waste time selecting fittings based on the tube size.

Dual use fitting

※Mountable tube sizes:
F10 series: $\phi$4 and $\phi$6
F15 series: $\phi$6 and $\phi$8
F18 series: $\phi$8 and $\phi$10

Note: A single use fitting can also be selected.

Connecting a $\phi$6 tube

Connecting a $\phi$4 tube

The same fitting as in the left photograph

## 3 Allows the fitting block to be changed for either base piping or direct piping

- Since the direction of the fitting blocks can be changed after purchase, the user is free to change the piping direction.

(Excluding monoblock manifold F type, and PC board manifold F type)

Base piping

Direct piping

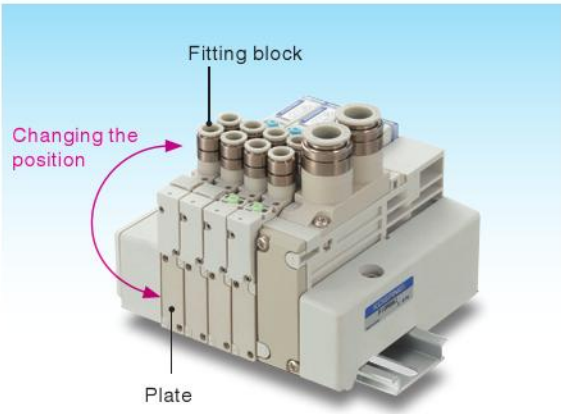


**Caution** Before use, be sure to read the "Safety Precautions" on p.13.

# Redesigned Solenoid Valves F10 and F15 Series!

# Six characteristics make it even easier to use

## 1 More compact, lower power consumption

- The newly developed solenoid valve F10 and F15 series use less power.
- Total length reduced by 6 mm [0.236 in.].

**0.9W**
Old standard type Note

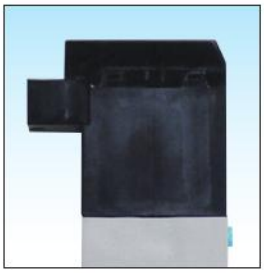

**0.1W**
New low-current type Note

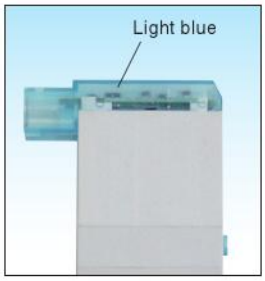


**0.4W**

Note: With reverse current protection circuit

## 2 Tandem 3-port valve (4-position) has newly been added

- Two 3-port valve functions in one valve body.
- Using F series valves as an air-operated valve or for single-acting cylinder control saves space.
- Allows combined mounting with 5-port valve.

| Model | 4(A) side | 2(B) side | Symbol |
|---|---|---|---|
| F10 □ TA<br>F15 □ TA | Normally closed (NC) | Normally closed (NC) | 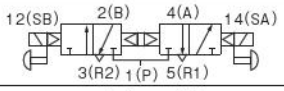  |
| F10 □ TB<br>F15 □ TB | Normally open (NO) | Normally open (NO) | 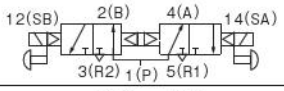  |
| F10 □ TC<br>F15 □ TC | Normally closed (NC) | Normally open (NO) | 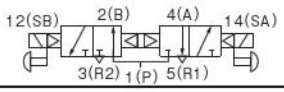  |

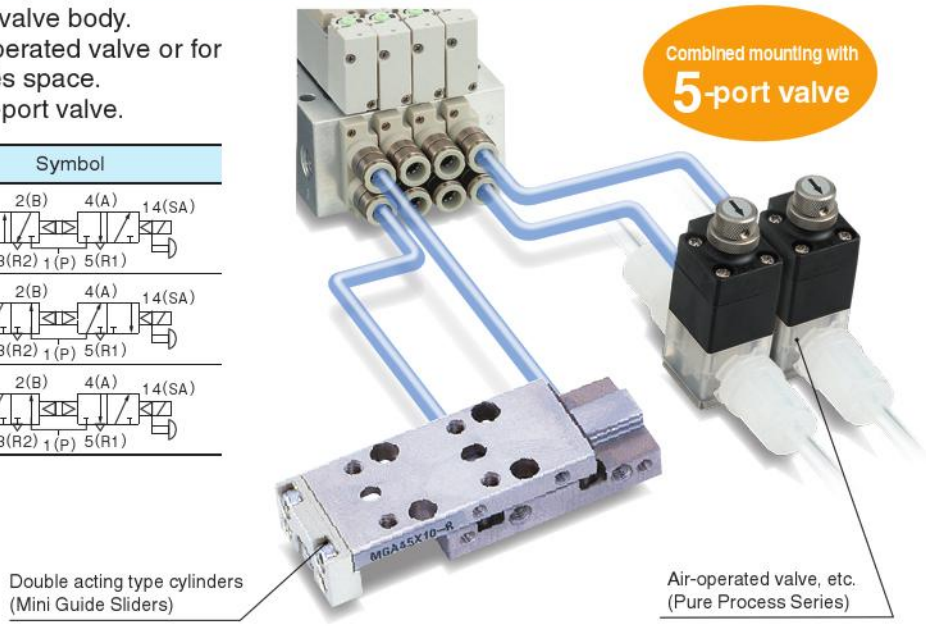


## 3 Wire-saving type has been added to monoblock manifold

- Wire-saving type added to monoblock manifold A and F types.
- Wiring specifications for flat cable connector and D-sub connector are available.

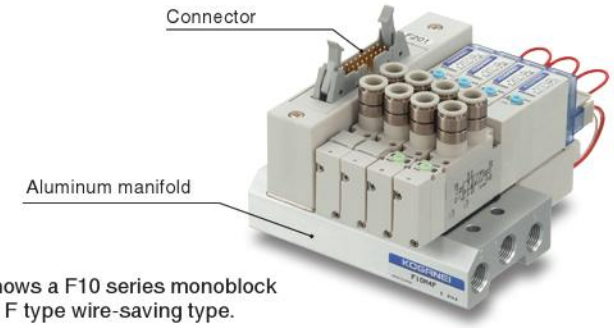


*Photo shows a F10 series monoblock manifold F type wire-saving type.

# 4 Stop valve (optional) has been added (Only for Monoblock Manifold)

- Enables replacement of valves without stopping operation of various devices and instrumentation lines.
- Stop valve enables the opening and closing of each unit's flow path without shutting off the main air supply.

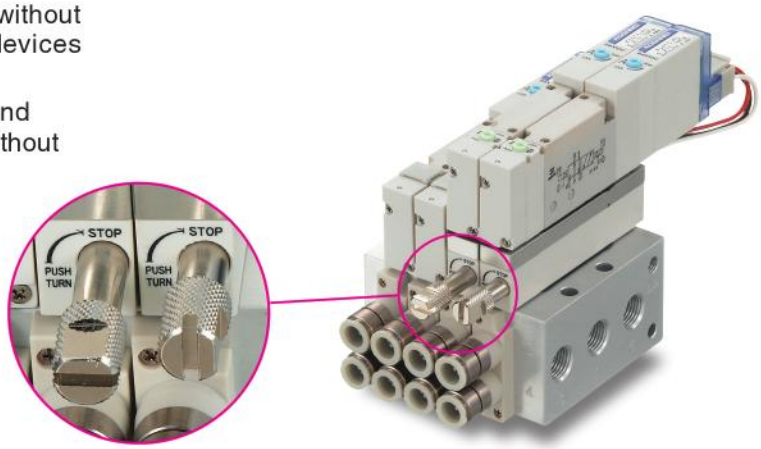


# 5 Back pressure prevention valve (optional) has been added

- Prevents back pressure problems caused when operating single acting cylinders, etc.

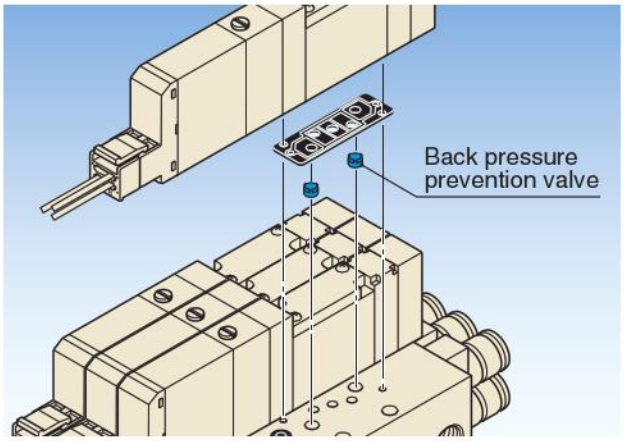


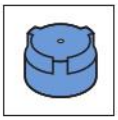

**Back pressure prevention valve**

Two back pressure prevention valves are mounted on the manifold side.
This prevents cylinder malfunctions caused by the exhaust air from other valves.

# 6 Slim and compact

## ■ Monoblock manifold F type

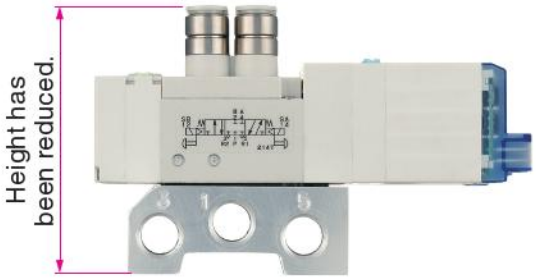


*Photo shows F10 series.

## ■ Serial transmission type

- Transmission portion and manifold combined in a single-piece construction.

Compatible devices with serial transmission integrated manifold

For OMRON CompoBus/S (16 outputs)
For CC-Link (16 outputs)
For CC-Link (32 outputs)
For DeviceNet (16 outputs)
For DeviceNet (32 outputs)
For CompoNet (16 outputs)
For EtherCAT (16 outputs)
For EtherCAT (32 outputs)
NEW For EtherNet/IP (16 outputs)
NEW For EtherNet/IP (32 outputs)

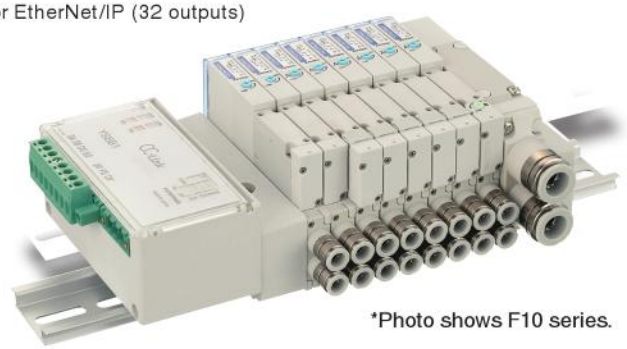

*Photo shows F10 series.

# Product Range

## Solenoid Valves F10 Series

- **Valve width:** 10 mm [0.394 in.]
- **Sonic conductance C:** 0.97 $dm^3/(s \cdot bar)$ [Cv: 0.27]
- **Applicable cylinder bore sizes:** $\phi$20 [0.787 in.] ~ $\phi$50 [1.969 in.]

## Solenoid Valves F15 Series

- **Valve width:** 15 mm [0.591 in.]
- **Sonic conductance C:** 2.05 $dm^3/(s \cdot bar)$ [Cv: 0.57]
- **Applicable cylinder bore sizes:** $\phi$40 [1.575 in.] ~ $\phi$80 [3.150 in.]

## Solenoid Valves F18 Series

- **Valve width:** 18 mm [0.709 in.]
- **Sonic conductance C:** 3.6 $dm^3/(s \cdot bar)$ [Cv: 1]
- **Applicable cylinder bore sizes:** $\phi$50 [1.969 in.] ~ $\phi$100 [3.937 in.]

## Single Valve Unit

Valves can be used as single units by attaching inlet port blocks. Mounting brackets are also available.

**Outlet port specifications**

| Series | With sub-base | | For single valve unit or manifold use | | | | | | | | | |
|---|---|---|---|---|---|---|---|---|---|---|---|---|
| | Female thread | | With female thread block | | | With dual use fitting block | | | With single use fitting block | | | |
| | Rc1/8 NPT1/8 | Rc1/4 NPT1/4 | M5 10-32 UNF | Rc1/8 NPT1/8 | Rc1/4 NPT1/4 | $\phi$4 & $\phi$6 | $\phi$6 & $\phi$8 | $\phi$8 & $\phi$10 | $\phi$4 | $\phi$6 | $\phi$8 | $\phi$10 |
| **F10** | ● | | ● | | | ● | | | ● | ● | | |
| **F15** | ● | | | ● | | | ● | | | ● | ● | |
| **F18** | | ● | | | ● | | | ● | | | ● | ● |

**With fitting block**

**With female thread block**

**With A type sub-base**

■ **With mounting bracket**

F10,F15 Order codes p.44,45
F18 Order codes p.72,73
F10 Dimentions p.111
F15 Dimentions p.144
F18 Dimentions p.177


## Monoblock Manifold A Type (Base Piping Type)

This base piping type manifold offers easy maintenance and cost performance.
Replacing the outlet block enables its use as a direct piping type manifold.
Using a pre-wired common terminal plug connector greatly reduces wiring work.

**With fitting block**

**With female thread block**

■ **Pre-wired common terminal plug connector**

F10,F15 Order codes p.46,47
F18 Order codes p.74,75
F10 Dimentions p.114
F15 Dimentions p.147
F18 Dimentions p.180


## Monoblock Manifold F Type (Direct Piping Type)

The direct piping type manifold offers excellent cost performance.
Using a pre-wired common terminal plug connector greatly reduces wiring work.

**With fitting block**

**With female thread block**

■ **Pre-wired common terminal plug connector**

F10,F15 Order codes p.48,49
F18 Order codes p.76,77
F10 Dimentions p.116
F15 Dimentions p.149
F18 Dimentions p.182

NEW

## Monoblock Manifold A Type, Wire-Saving Type (Base Piping Type)

Wire-saving type of monoblock manifold A type. Wiring specifications include the flat cable connector mounting type and the D-sub connector mounting type.

Note: Not available in the F18 series.

With fitting block

With female thread block

Order codes p.50,51
F10 Dimentions p.117
F15 Dimentions p.150

NEW

## Monoblock Manifold F Type, Wire-Saving Type (Direct Piping Type)

Wire-saving type of monoblock manifold F type. Wiring specifications include the flat cable connector mounting type and the D-sub connector mounting type.

Note: Not available in the F18 series.

With fitting block

With female thread block

Order codes p.52,53
F10 Dimentions p.118
F15 Dimentions p.151

## PC Board Manifold

A MIL type 20-pin flat cable connector is installed on the monoblock manifold to achieve both wiring savings and cost performance. Combined use of the Koganei PC wiring system and wiring specification -F201 allows for more effective wiring savings.

Note: Not available in the F18 series.

A type (Base piping type)

F type (Direct piping type)

Order codes p.54-59
F10 Dimentions p.119
F15 Dimentions p.152

## Split Manifold Non-Plug-in Type

Enables easy addition or removal of manifold blocks. This system offers more flexibility in conforming to changes in specifications.

Manifold port with fitting block

Valve port with fitting block

Manifold port with female thread block

Valve port with female thread block

F10,F15 Order codes p.60-63
F18 Order codes p.78-80
F10 Dimentions p.120
F15 Dimentions p.153
F18 Dimentions p.183

# Split Manifold Plug-in Type

Manifold conforms to reducing wiring work. Adding on wiring allows adding manifold units.
Combined use of the Koganei PC wiring system and wiring specification -F201 offers more effective wiring savings.

F10,F15 Order codes p.64-67
F18 Order codes p.82-85
F10 Dimentions p.122
F15 Dimentions p.155
F18 Dimentions p.185

**Manifold port with fitting block**

**Valve port with fitting block**

**Manifold port with female thread block**

**Valve port with female thread block**

# Wiring Specifications

Flat cable connector top surface (vertical) wiring type Note

Flat cable connector side surface (horizontal) wiring type Note

D-sub connector top surface (vertical) wiring type Note

D-sub connector side surface (horizontal) wiring type Note

Terminal block

Note: You can change the connector direction.

Photograph shows flat cable connector.

For the flat cable connector and D-sub connector, the no power supply terminal type is also available.

**Caution**: For the F18 series, neither the connector side surface (horizontal) wiring type nor the no power supply terminal type is available.

Remark: You can also select the wiring position (wiring block) for right-side mounting.

# Serial Transmission Compatible Manifold

Integrated type (F10, F15 series)

Stand-alone type

- **For CC-Link**
- **For OMRON B7A Link Terminal**
- **For OMRON CompoBus/S**
- **For CompoNet**
- **For DeviceNet** Note
- **For EtherCAT** Note
- **For EtherNet/IP** Note

Note: Not available in the F18 series.

※For details, see p. 37-40.

F10,F15 Order codes p.68-71
F18 Order codes p.86-88
F10 Dimentions p.131
F15 Dimentions p.164
F18 Dimentions p.194

For EtherCAT (F10,F15 series)
For EtherNet/IP (F10,F15 series) NEW

Remark: You can also select the wiring position (transmission block) for right-side mounting.

# Energy-Saving Proposal Using the Solenoid Valves F10 and F15 Series

## *Comparison of power consumption (Reference)*

With the cylinder conditions operating 5 seconds in the extended side and 5 seconds in the retraced side, and an operating time of 12 hours per day, five days per week, and 50 weeks per year, the power consumption for one year is calculated. (Annual power consumption: Power consumption per hour×12 hours×5 days×50 weeks)

### ■Case 1: when single solenoid is used (0.4W: Standard type)

### ■Case 2: when single solenoid is used (0.1W: Low current type)

### ■Case 3: when double solenoid is used (0.4W: Standard type)

**<Pulse control using self-holding function>**

**●Results for calculation of power consumption under the above conditions, and power consumption graph**

| Solenoid | Power consumption (W) | Energizing time (s) | | Number of operations per hour (cycles) | Electric energy per hour (Wh) | Annual electric energy (kWh) and annual electric energy cost |
|---|---|---|---|---|---|---|
| | | SA : ON | SB : ON | | | |
| Single solenoid (standard type) | 0.4 | 5 | – | 360 | 0.200 | 0.6 [13.2 yen] |
| Single solenoid (low-current type) | Starting: 0.4/holding: 0.1 | 5 | – | 360 | 0.052 | 0.156 [3.43 yen] |
| Double solenoid (standard type) | 0.4 | 0.05 | 0.05 | 360 | 0.004 | 0.012 [0.264 yen] |

Remark: Comparison using new type solenoid 24VDC specification. Electricity charges are assumed to be 22 yen/kWh.

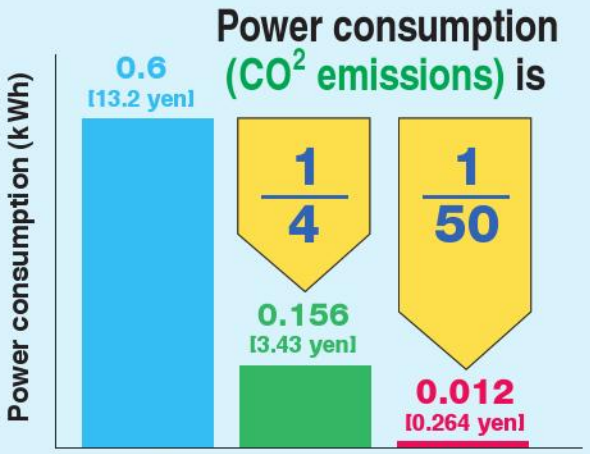


The double solenoid valve (pulse control) shows a lower electric energy result. Note that with higher operation frequency, this difference will narrow somewhat.

- **With use of 0.1W low-current type, the power consumption is reduced to 1/4.**

**Furthermore,**

- **If pulse control is performed using a double solenoid, power consumption can be sharply reduced.**
- **Solenoid valves F series is single/double dual use valves.**
- **Since the single solenoid and double solenoid are the same price[Note], it also enables cost benefits.**

Note: For 2-position valve. Excluding T0 type.

# Notification of Changes to the Solenoid Valves F10 and F15 Series Specifications

Thank you for using our products.

Now we have undertaken to introduce some changes to the specifications of the popular Solenoid Valves F10 and F15 Series (no specification changes have been made to the Solenoid Valves F18 Series).

With these new solenoids, we have reduced both the wattage and total length of the valve. In addition, we have made the F type and serial transmission manifolds more compact.

We hope for your understanding of these changes and for your continued use in the future.

## ■ Descriptions of changes

### ● Single valve unit

● Large reduction in power consumption and 6 mm [0.236 in.] shorter in total length while maintaining 100% mounting and wiring interchangeability with the old model.

Unit: mm [in.]

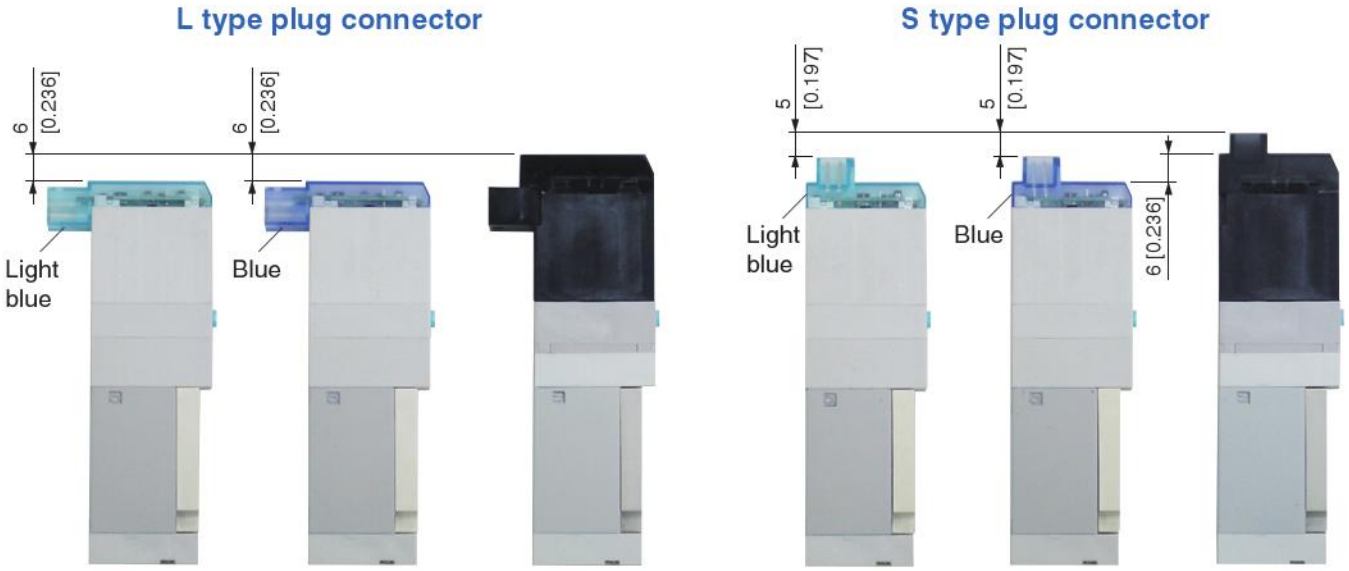


| New | New | Old | New | New | Old |
|---|---|---|---|---|---|
| Low-current type 0.1W | Standard type 0.4W | Standard type 0.9W | Low-current type 0.1W | Standard type 0.4W | Standard type 0.9W |

*Photo shows F10 series. (F15 series is similar.)

● High-speed circuit employed on coil circuit board to achieve faster OFF response.
● Newly designed A and B independent coils allow for optional tandem 3-port valve.

## ● Monoblock manifold

● More compact F type manifold that eliminates PR port (collected in 5 (R1) port).

### ■ F10 Series (reference) mm [in.]

**New F type manifold**

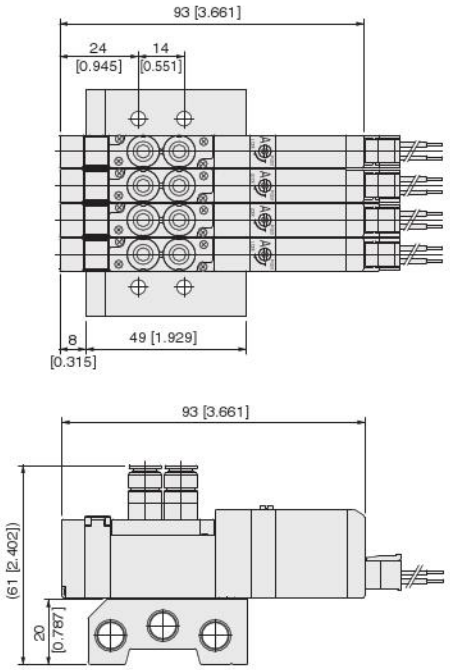


**Old F type manifold**

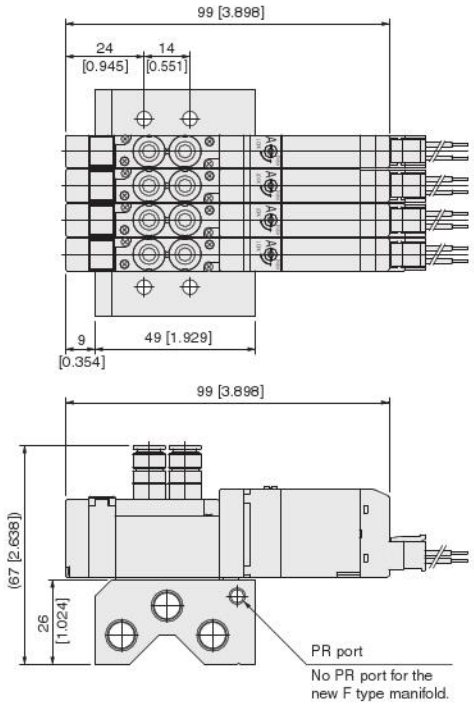


### ■ F15 Series (reference) mm [in.]

**New F type manifold**

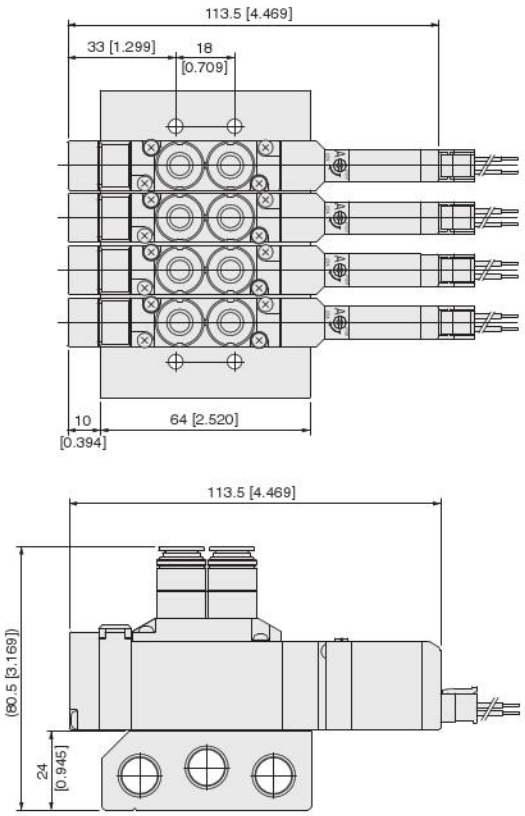


**Old F type manifold**

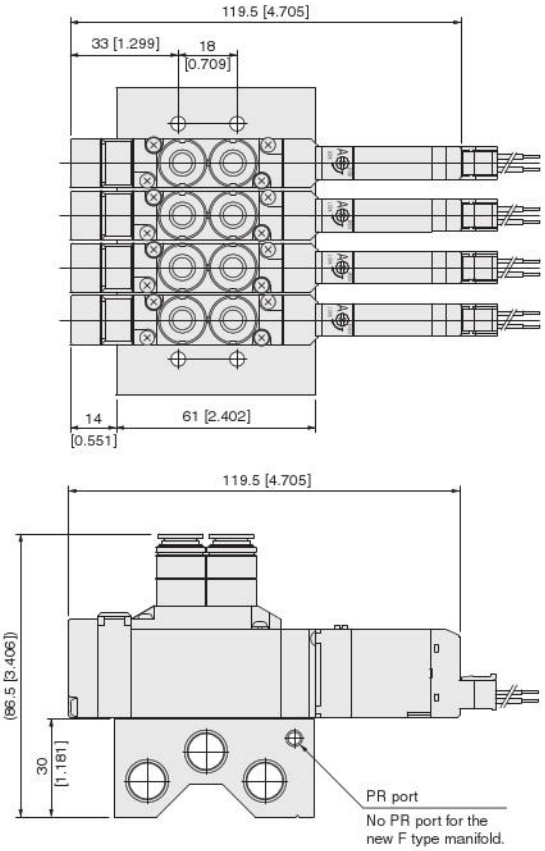


● Optional back pressure prevention valve for both the A type and F type manifolds now available.
● Optional sandwich-type stop valve now available.

## ● Split type manifold/serial transmission compatible manifold

- Coil portion flattened by minimizing the valve size.
- Enables selection and switching between top surface wiring and side surface wiring with flat cable connector and D-sub connector installation.
- Optional no power supply terminal type (standard type comes with power supply terminal) now available.
- More compact serial transmission device and manifold combined in single-piece construction (some models connected with flat cable).
- Optional back pressure prevention valve now available.
- Changed color of a valve base assembly cover from light blue to ivory in order to enable identification between the old type and new type. (For differentiation between new and old type, see p.12.)

### ■ F10 Series split manifold plug-in type (reference) mm [in.]

**New manifold**

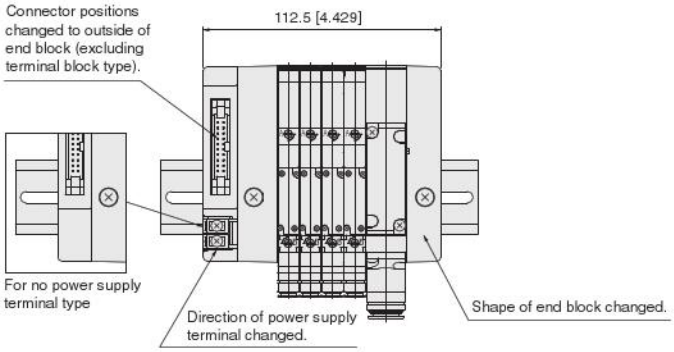


**Old manifold**

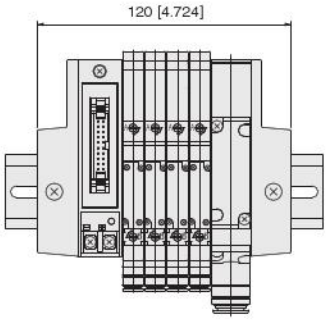


### ■ F15 Series split manifold plug-in type (reference) mm [in.]

**New manifold**

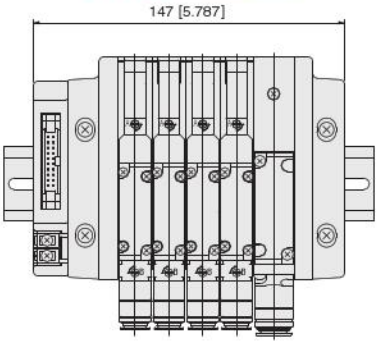


**Old manifold**

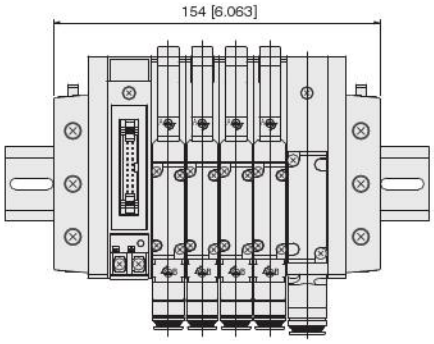


### ■ F10 Series serial transmission compatible manifold (reference) mm [in.]

**New manifold**

**Integrated type**
(Compatible with CC-Link, DeviceNet, CompoNet, CompoBus/S, and EtherCAT)

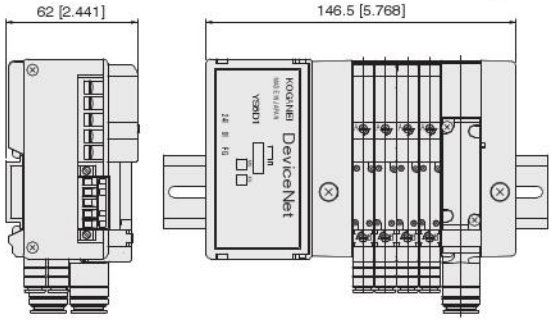


**Old manifold**

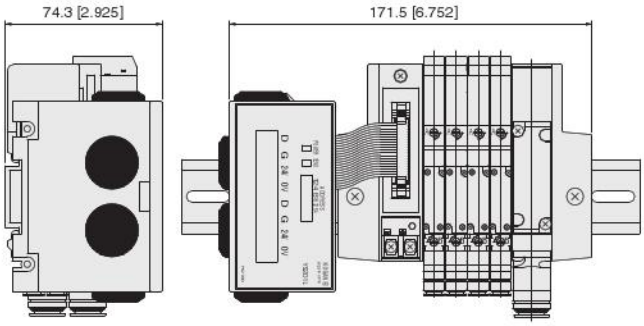


**Stand alone type (flat cable connection)**
(Compatible with OMRON B7A Link Terminal)

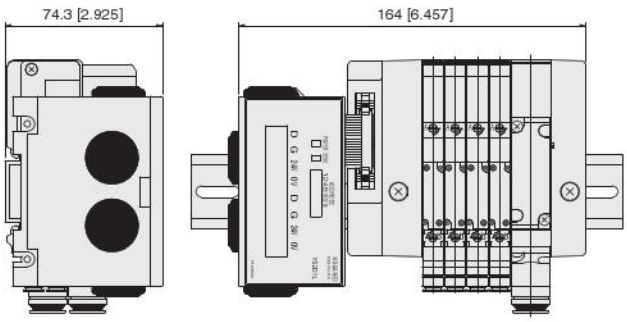


*While dimensions show F10 Series, the F15 Series is similar.

■ **Reference photo: Valve base assembly (Photo shows F10 Series.)**

**New manifold**

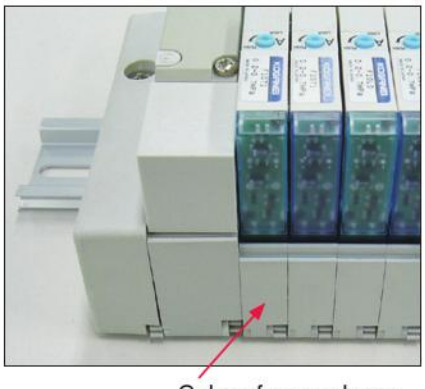

Color of cover: Ivory

**Old manifold**

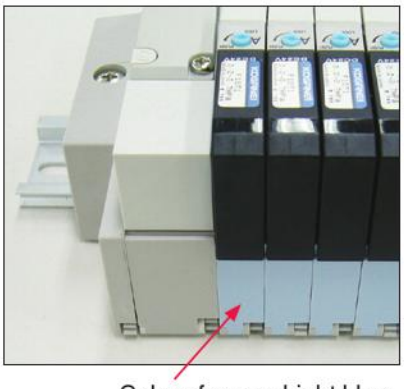

Color of cover: Light blue

## ●Others

### 1. Changes in the monoblock manifold (aluminum manifold) gasket

Along with the back pressure prevention valve becoming an option, the gasket configuration has also been changed.
Note that a new gasket type cannot be fitted onto and used on an old type manifold.
When replacing a mounted valve, order an old type gasket if you need to replace the gasket of an old type manifold.
(Old type gasket model for the F10 Series: **Q-F10Z-GS1**, old type gasket model for the F15 Series: **Q-F15Z-GS1**)

**For new type manifold**

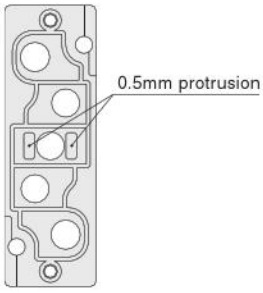


**For old type manifold**

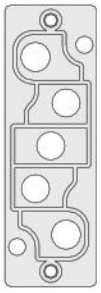

| Mounted valve | New/old type gasket | New type manifold | Old type manifold |
|---|---|---|---|
| New type valve | New type gasket | ○ | × |
| | Old type gasket | × | ○ |
| Old type valve | New type gasket | ○ | × |
| | Old type gasket | × | ○ |

Note: There is no gasket replacement for a split manifold or serial transmission compatible manifold.

### 2. Determining whether a monoblock manifold A type or F type, or PC board manifold A type or F type is an old type or new type

**New type manifold**

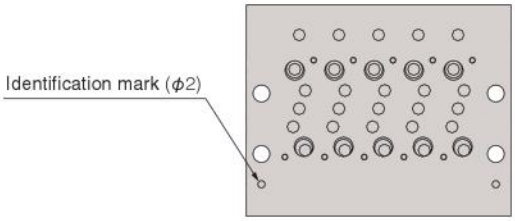


**Old type manifold**

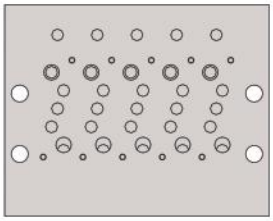

### 3. Connectors

**New type connector** (gray)

There have been no changes in shapes.

**Old type connector** (black)

## Safety Precautions (Solenoid Valves F Series)

**Always read these precautions carefully before use.**

Before selecting and using the products, please read all the "Safety Precautions" carefully to ensure proper product use.
The Safety Precautions described below are to help you use the product safely and correctly, and to prevent injury or damage to you, other people, and assets.
Be sure to observe these safety precautions together with the following safety regulations of ISO4414 (Pneumatic fluid power - General rules and safety requirements for systems and their components), and JIS B 8370 (General rules relating to systems).

**The directions are ranked according to degree of potential danger or damage: "DANGER", "WARNING", "CAUTION" and "ATTENTION."**

| | |
|---|---|
| ⚠ DANGER | Indicates situations that can be clearly predicted as dangerous.<br>Death or serious injury may result if the situation is not avoided.<br>It could also result in damage or destruction of assets. |
| ⚠ WARNING | Indicates situations that, while not immediately dangerous, could become dangerous.<br>Death or serious injury may result if the situation is not avoided.<br>It could also result in damage or destruction of assets. |
| ⚠ CAUTION | Indicates situations that, while not immediately dangerous, could become dangerous.<br>Failure to avoid the situation creates the risk of minor or semi-serious injury.<br>It could also result in damage or destruction of assets. |
| ⚠ ATTENTION | While there is little chance of injury, this content refers to points that should be observed for appropriate use of the product. |

### ■ This product was designed and manufactured for use in general industrial machinery.

- ■ When selecting and handling equipment, the system designer or another person with sufficient knowledge and experience should always read the "Safety Precautions", "catalog", "instruction manual", and other literature before commencing operation. Improper handling is dangerous.
- ■ After reading the instruction manual, catalog, and other documentation, always place them in a location that allows easy availability for reference to users of this product.
- ■ Whenever transferring or lending the product to another person, always attach the catalog, instruction manual, and other information to the product where they are easily visible in order to ensure that the new user can use the product safely and properly.
- ■ The danger, warning and caution items listed under these "Safety Precautions" do not cover all possible contingencies. Read the catalog and instruction manual carefully, and always keep safety first.

### ⚠ DANGER

- ● Do not use for the purposes listed below:
  1. Medical equipment related to maintenance or management of human lives or bodies.
  2. Mechanical devices or equipment designed for the purpose of moving or transporting people.
  3. Critical safety components in mechanical devices.

  This product has not been planned or designed for purposes that require advanced stages of safety. It could cause injury to human life.
- ● Do not use in locations with or near dangerous substances such as flammable or ignitable substances. This product is not explosion-proof. It could ignite or burst into flames.
- ● When attaching the product, always firmly support and secure them (including workpieces) in place. Dropping or falling of the product or improper operation could result in injury.
- ● Persons who use a pacemaker, etc., should keep a distance of at least 1 meter [3.28 ft.] away from the product. There is a possibility that the pacemaker will malfunction due to the strong magnet built into the product.
- ● Never attempt to modify the product. It could result in abnormal operation leading to injury, etc.
- ● Never attempt inappropriate disassembly, assembly or repair of the product's basic construction, or of its performance or functions. This could result in injury, electric shock, fire, etc.
- ● Do not splash water on the product. Spraying it with water, washing it, or using it underwater could result in malfunction of the product leading to injury, electric shock, fire, etc.
- ● While the product is in operation, avoid touching it with your hands or otherwise approaching too close. In addition, do not make any adjustments to the interior or to the attached mechanisms (manual override, connecting and disconnecting of wiring connectors, adjustment of pressure switches, or release or connection of piping tubes or plugs) while in operation. The actuator can move suddenly, possibly resulting in injury.

### ⚠ WARNING

- ● Do not use the product in excess of its specification range. Such use could result in product breakdowns, function stop, damage or drastically reduce the operating life.
- ● Before supplying air or electricity to the device and before starting operation, always conduct a safety check of the area of machine operation. Unintentional supply of air or electricity could possibly result in electric shock, or in injury caused by contact with moving parts.
- ● Do not touch the terminal and the miscellaneous switches, etc., while the device is powered on. There is a possibility of electric shock and abnormal operation.
- ● Do not throw the product into fire. The product could explode and/or release toxic gases.
- ● Do not sit on the product, place your foot on it, or place other objects on it. Accidents such as falling or tripping over the product could result in injury. Dropping the product could result in injury, or also damage or break it resulting in abnormal or erratic operation, or runaway, etc.
- ● When conducting any kind of operation for the product, such as maintenance, inspection, repair, or connection/disconnection or replacement of piping, always turn off the air supply completely and confirm that residual pressure inside the product or in piping connected to the product is zero before proceeding. In particular, be aware that residual air will still be in the air compressor, vaccum pump or air storage tank. The actuator could abruptly move if residual air pressure remains inside the piping, causing injury.
- ● Before commencing normal operation, always release the lock of the locking type manual override, and confirm that the manual override is in the normal position and that the main valve is in the proper switching position, and only then commence the operation. Failure to do so could lead to erroneous operation.
- ● Always shut OFF the power before wiring operations. Wiring with the power ON could result in electric shock.
- ● Always apply the specified voltage to the solenoid. Applying the wrong voltage could result in failure to perform the intended function, and could damage or burn the product itself.
- ● Avoid scratching the cords of lead wires, etc. Letting the cords be subject to scratching, excessive bending, pulling, rolling up, or being placed under heavy objects or squeezed between two objects, may result in current leaks or defective continuity that lead to fire, electric shock, or abnormal operation.
- ● Do not pull out the connectors while the power is ON. Also, do not apply unnecessary stress on the connector. It could result in erratic equipment operation that could lead to personal injury, equipment breakdown, or electrical shock, etc.
- ● Always check the Catalog to ensure that the product wiring and piping is done correctly. Errors in wiring and piping could lead to abnormal operation of the actuators, etc.
- ● In the first operation after the equipment has been idle for 48 hours or more, or has been in storage, there is a possibility that contacting parts have got stuck, resulting in equipment operation delays or sudden movements. For these first operations, always run a test operation before use to check that operating performance is normal.

- In low frequency use (more than 30 days between uses), there is a possibility that contacting parts may have stuck toghter, resulting in equipment operation delays or sudden movements that could lead to personal injury. Run a test operation at least once every 30 days to confirm that movement is normal.
- For double solenoid type (excluding the Tandem 3-port valve), do not apply current through both solenoids simultaneously. It is impossible in such a situation to maintain the correct valve position, and the equipment may operate in an unintended direction, leading to the possibility of equipment breakdown or personal injury.
- Do not use the solenoid valves or the wiring that controls them, near power lines where large electrical currents are flowing, or in locations subject to high magnetic fields or power surges. Such application could lead to unintended operation.
- The solenoid valve can generate surge voltage and electromagnetic waves when the switch is turned OFF, affecting the operations of surrounding equipment. Use solenoids with surge suppression, or take countermeasures in the electrical circuits for surges or electromagnetic waves.
- Do not use the product where ozone may be generated, such as near ocean beaches or other places subject to direct sunlight or mercury lamps. Ozone can cause rubber parts to deteriorate, which can lead to degraded performance and functions, or to equipment stoppages. (Excludes items where measures against ozone have been taken.)
- Do not use any media other than shown on the specifications. Use of non-specified media could lead to functional shutdown after a short period, to sudden performance drops, or to shorter operating life.
- If mounting the solenoid valve inside a control panel, or if energizing it for long periods, provide heat radiation measures to ensure that temperatures surrounding the solenoid valve always remain within the specified temperature range. In addition, if energizing continuously over long periods, rising temperatures due to generation of heat in the coil can lead to a decline in solenoid valve performance and operating life, and have adverse effects on nearby equipment. As a result, when the solenoid valve is continuously energized over long periods of time, or when the solenoid valve is energized for longer periods than it is non-energized on any day, a good suggestion is to keep the solenoid valve in a normally open (NO) specification as one possible method of reducing the amount of time the valve is energized. For details, consult us.
- After wiring operations, always check to ensure that no wiring connection errors exist before turning ON the power.
- Do not collect the exhaust lines for air cylinders, etc. with pilot exhaust lines for solenoid valves into the same piping, etc. Interference in the exhaust could result in erratic operation.
- When using the valve in a manifold, be aware when operating an air cylinder or performing air blowing operations that back pressure could cause erratic operations of the cylinder or erroneous air delivery from the air blow port. Caution is particularly needed when using valves with 3-position exhaust center specification, when operating single acting cylinders, or when operating a cylinder and blowing air using the same manifold. If there are concerns in this area, take such countermeasures as using individual exhaust spacers or back pressure prevention valves.

## ⚠ CAUTION

- When mounting the product, leave room for adequate working space around it. Failure to ensure adequate working space will make it more difficult to conduct daily inspections or maintenance, which could eventually lead to system shutdown or damage to the product.
- For mounting or transport of heavy products, use a lift, supporting tool, or several people, to provide firm support, and proceed with due caution to ensure personal safety.
- Do not bring magnetic media, within 1 meter [3.28 ft.] of the product. There is the possibility that the data on the magnetic media will be destroyed due to the magnetism of the magnet.
- If leakage current is flowing in the control circuit, there is a possibility of the product performing an unintended operation. Take measures against current leaking in the control circuit, to ensure that the leakage current value does not exceed the allowed range in the product specifications.
- Do not block the product's breathing holes. Pressure changes occur due to changes in volume during operation. Blocking the breathing holes destroys the pressure balance, and could cause failure of the intentional operation, equipment damage, or personal injury.
- Do not use the solenoid valve in locations subject to large electrical currents or magnetic fields. It could result in erratic operation.
- Oily materials from the compressor (excluding the oil-free compressor) can cause drastic deterioration in product performance, and even a functional shutdown. Always install a mist filter before pneumatic equipment to remove the oily component.
- The properties of the lubrication oil can change when used in dry air where dew point temperatures is lower than –20°C [–4°F]. It could result in degraded performance or in functional shutdown.
- Do not use the product in locations that are subjected to direct sunlight (ultraviolet ray), to dust, salt, or iron powder, high temperature, high humidity or in media or ambient atmospheres that include organic solvents, phosphate ester type hydraulic oil, sulfur dioxide, chlorine gas, acids, etc. It could lead to an early shutdown of some functions or a sudden degradation of performance, and result in reduced operating life. For materials used, see Major Parts and Materials.
- Always carefully wash your hands after touching oil or grease used in the valves. If you smoke a cigarette while there is oil or grease remains on your hands, oil or grease transferred to the cigarette could catch fire and emit toxic gases.

## ⚠ ATTENTION

- When considering the possibility of using this product in situations or environments not specifically noted in the Catalog or Instruction Manual, or in applications where safety is an important requirement, such as in an airplane facility, combustion equipment, leisure equipment, safety equipment and other places where human life or assets may be greatly affected, take adequate safety precautions such as application with enough margins for ratings and performance or fail-safe measures. Be sure to consult us with such applications.
- Always check the Catalog and other reference materials for product wiring and plumbing setup.
- Install a muffler, etc. on the exhaust port. It is effective in reducing exhaust noise.
- When handling the product, wear protective gloves, safety glasses, safety shoes, etc. to keep safety.
- When the product can no longer be used or is no longer needed, dispose of it appropriately as industrial waste in accordance with the Waste Disposal and Public Cleaning Law, and other ordinances and regulations imposed by local government authorities. As incineration disposal of oil or grease used in the valves will generate corrosive, toxic hydrofluoric acid (HF), dispose of these compounds in an acid-resistant incinerator with toxic removal facilities. For large volumes, use a registered industrial waste disposer.
- Pneumatic equipment can exhibit degraded performance and function over its operating life. Always conduct daily inspections of the pneumatic equipment, and confirm that all requisite system functions are satisfied, to prevent accidents from happening.
- Air leaks from the valve are not zero. For application of requiring holding pressure (including vacuum) inside the pressure vessel, consider adequate margin of capacity and holding time in design of the system.
- When using a valve for air blowing, use an external pilot specification. With the internal pilot specification, air blowing can cause a pressure drop that could affect valve operations.
- For inquiries about the product, consult your nearest Koganei sales office, or Koganei overseas department. The address and telephone number is shown on the back cover of this catalog.

## ⚠ OTHERS

- Always observe the following items.
  1. When using this product in pneumatic systems, always use genuine KOGANEI parts or compatible parts (recommended parts).
     When conducting maintenance and repairs, always use genuine KOGANEI parts or compatible parts (recommended parts). Always observe the required methods and procedure.
  2. Do not attempt inappropriate disassembly or assembly of the product relating to basic configurations, or its performance or functions.

Koganei cannot be responsible if these items are not properly observed.

## General Precautions

### Mounting

1. While any mounting direction is allowed, be sure to avoid strong shocks or vibrations applied directly to the body.
2. Avoid using in the locations and environment listed below, as it could result in malfunction of the valve. If use in such conditions is unavoidable, always provide a cover or other adequate protective measures.
   - Location directly exposed to water drops or oil drops
   - Environment where a valve body is subject to dew condensation
   - Location directly exposed to machining chips, dust, etc
3. In piping connection with valves, flush the tube completely (by blowing compressed air) before piping.
   Intrusion of machining chips or sealing tape, rust, etc., generated during plumbing could result in air leaks and other defective operations.
4. Never use the valve with the 4(A) and 2(B) ports vented to the atmosphere.
5. When mounting a valve inside a control panel, or when energizing time is long, make adequate consideration for ventilation and other heat dissipation measures.
6. When adding or subtracting units in the manifold, or replacing a fitting block, be sure to tighten to within the specified tightening torque range.

### Media

1. Use air for the media. For the use of any other media, consult us.
2. Air used for the cylinder should be clean air that contains no deteriorated compressor oil, etc. Install an air filter (filtration of 40 μm or less) near the valve to remove collected liquid or dust. In addition, drain the air filter periodically.
3. When supply pressure is low, use piping for the 1(P) port with sufficient tube size.

### Lubrication

Can be used without lubrication due to the factory lubricant (grease). When the pneumatic products require lubrication, use Turbine Oil Class 1 (ISO VG32) or the equivalent. In addition, cutting off oil feed while an operation is in progress could lead to malfunction due to the dissipation of the factory lubricant (grease). As a result, always keep the oil feed running continuously. However, use caution since excessive oil feed can also be a cause of malfunction. Avoid using spindle oil or machine oil.

### Atmosphere

The product cannot be used when the media or ambient atmosphere contains any of the substances listed below.
Organic solvents, phosphate ester type hydraulic oil, sulphur dioxide, chlorine gas, or acids, etc.

### Wiring

After wiring, check that there is no error in the wiring connections.

### Piping

Since the 1(P), 3(R2), and 5(R1) ports are on both ends of the manifold, piping direction can be selected depending on the application (in monoblock manifolds).
At shipping, plugs are temporarily screwed in ports at one end, but are not firmly tightened. Regardless of which end piping is connected, always remove the plugs, use sealing tape or apply other sealing agent, and securely tighten the plugs into the unused ports.

1. Sealing tape wrapping method
   ① Before piping, perform air blowing (flushing) or cleaning to eliminate any machining chips, cutting oil, or dust, etc., remaining inside the pipes.
   ② When screwing in piping or fittings, caution should be taken to avoid letting machining chips or sealing materials from entering into the valves. When using sealing tape, wrap it so that 1.5～2 screw threads remain.

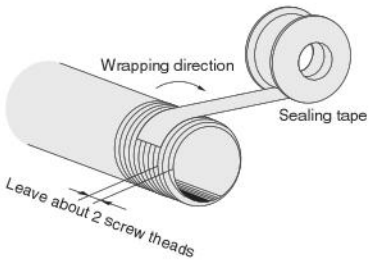


### Prevention of erratic operation in the manifold type

When using a manifold-type valve to operate an air cylinder, or to perform air blowing or similar operations, erratic operation due to exhaust interference or malfunction due to insufficient flow rate could occur. When using the manifold type valves, be sure to take the following measures beforehand.

1. Erratic operation due to large exhaust flow rate
   Cause: When a large-bore cylinder is operating, or multiple cylinders are operating at the same time, the exhaust air in the collective exhaust can flow backward through the exhaust ports of other solenoid valves. This could lead to an obstruction of the operations of other cylinders and may cause erratic operation in single acting cylinders or an Air Hand module due to inflow of air into them. The erratic operation is caused by insufficient manifold exhaust (large exhaust resistance).

   Countermeasure: To reduce the exhaust resistance, for the base monoblock manifold, vent the exhaust ports at both ends. For the split manifold, attach piping blocks to both ends to exhaust from both sides. If still affected even after exhausting from both ends, consider splitting the manifold, or if using a split manifold, either install a port isolator to separate the exhaust, or use a back pressure prevention valve.

2. Malfunctions due to insufficient pressure or flow rate
   Cause: When operating a large-bore cylinder, operating multiple cylinders at the same time, or using circuits to perform air blowing, etc., sudden consumption of air with the manifold type can result in insufficient flow rate to nearby cylinders, causing a reduction in speed or a shortage of thrust. In addition, in the pilot-type valve, this sudden consumption can lead to a pressure shortage for the pilot signals, and it causes erratic operations in the main stem.

   Countermeasure: Because it causes insufficient air delivery to the manifold, supply air from both ends of the manifold, or from the piping block 1(P) port mounted on both sides. For air blowing, consider either dividing the air lines for independent use, or use of an external pilot valve.

## 5-port, 2-position

**When set as a single solenoid or T0 type**

**When set as a double solenoid**

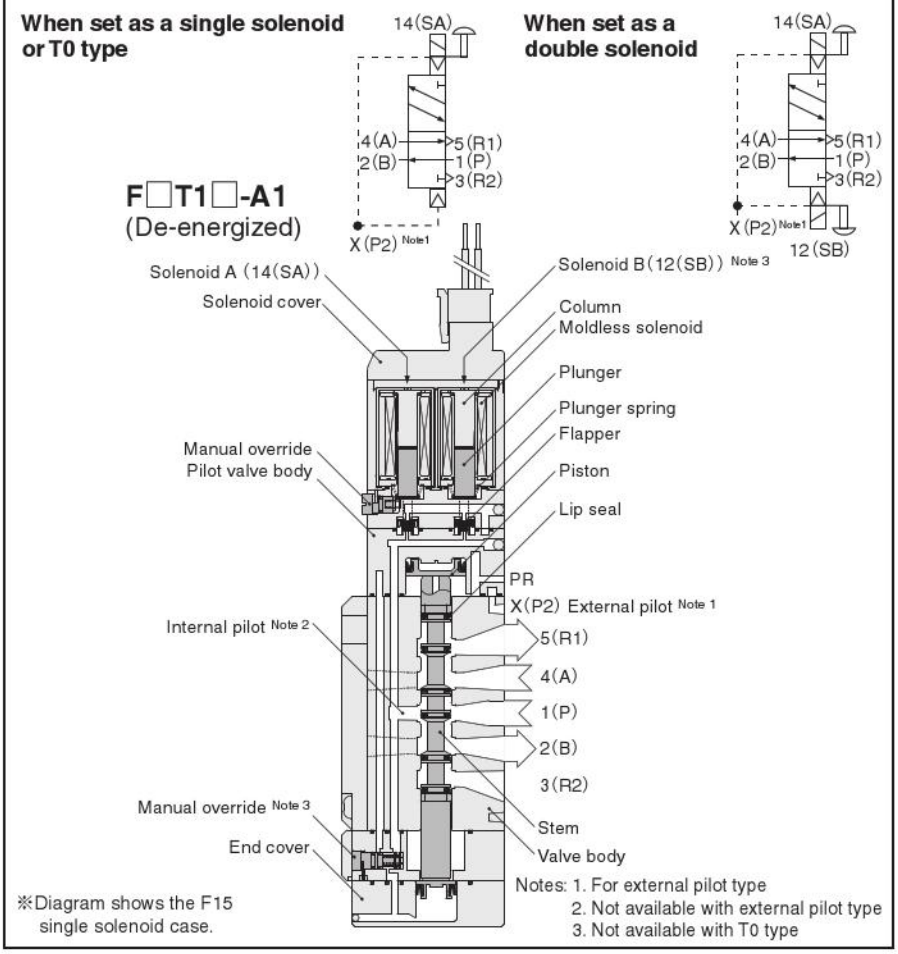


※Diagram shows the F15 single solenoid case.

Notes: 1. For external pilot type
2. Not available with external pilot type
3. Not available with T0 type

Remark: 1. When using a 5-port valve as a 3-port valve, see p.23.
2. For the F18 series, some of the shapes differ from the diagram. In addition, the F18 series is a molded solenoid.

### Major Parts and Materials

| Parts | | | Materials |
|---|---|---|---|
| Valve | Body | | Aluminum die-casting |
| | Stem | | Aluminum alloy Note |
| | Lip seal | | Synthetic rubber |
| | Flapper | | |
| | Sub-base | | Aluminum alloy (anodized) |
| | Plunger | | Magnetic stainless steel |
| | Column | | |
| | End cover | | Plastic |
| Manifold | Body | Monoblock | Aluminum alloy (anodized) |
| | | Split type | Plastic |
| | Block-off plate | | Mild steel (nickel plated) |
| | Seal | | Synthetic rubber |

Note: Some F10 and F15 Series models use plastic for the stem material.

## 5-port, 3-position

(Both 14 (SA) and 12 (SB) are de-energized)

**Closed center**

**F□T3□-A1**

**Exhaust center**

**F□T4□-A1**

**Pressure center**

**F□T5□-A1**

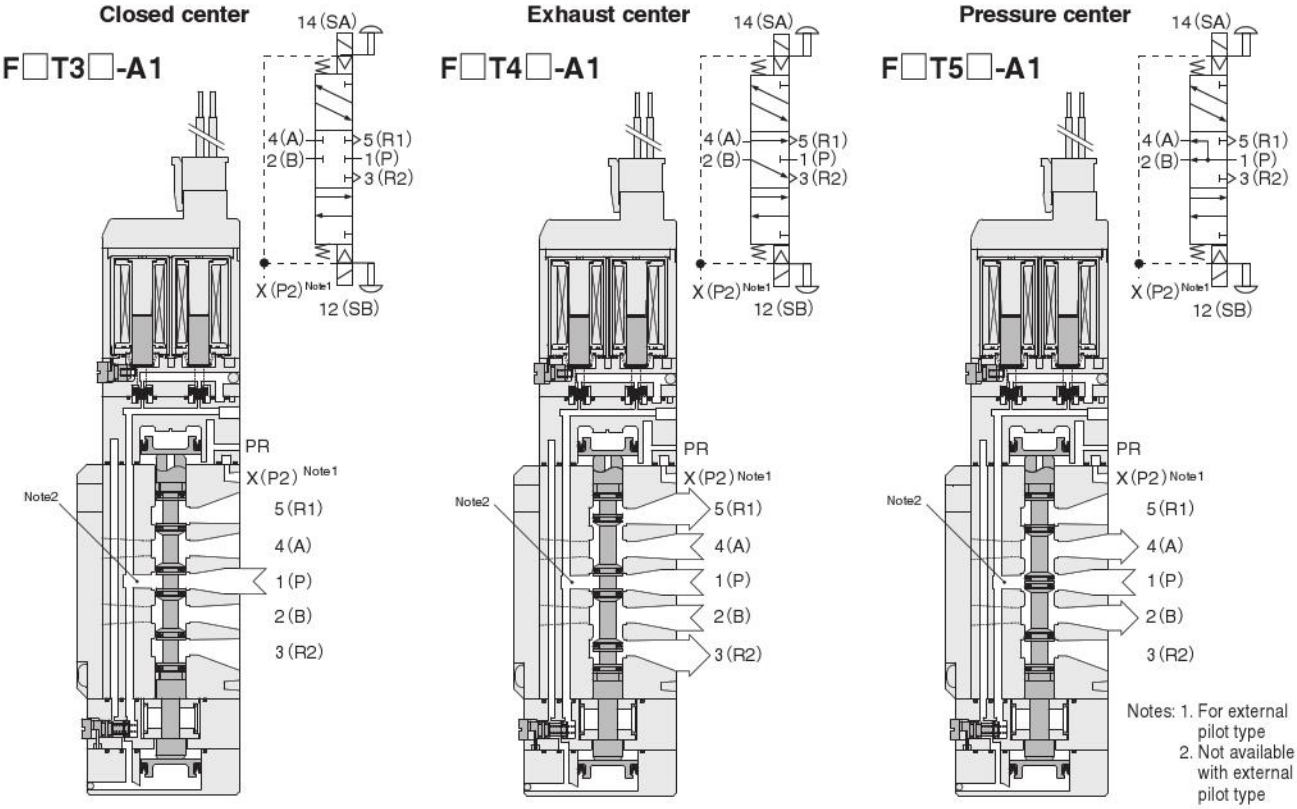


Notes: 1. For external pilot type
2. Not available with external pilot type

## Tandem 3-port, 4-position (F10, F15 series only)

(Both 14 (SA) and 12 (SB) are de-energized)

Normally closed (NC) & normally closed (NC)

**F□TA-A1**

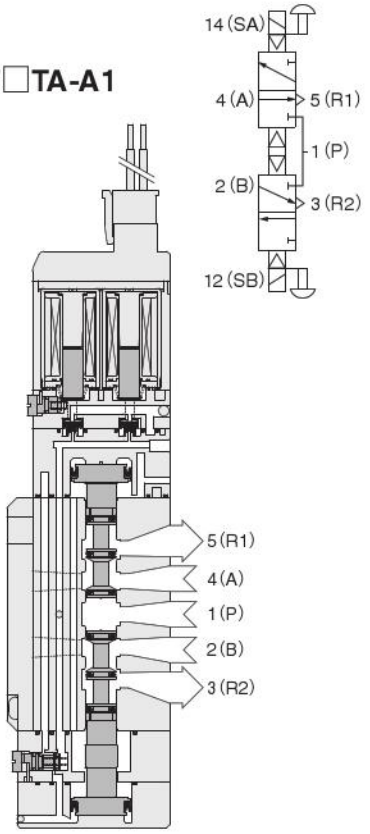


Normally open (NO) & normally open (NO)

**F□TB-A1**

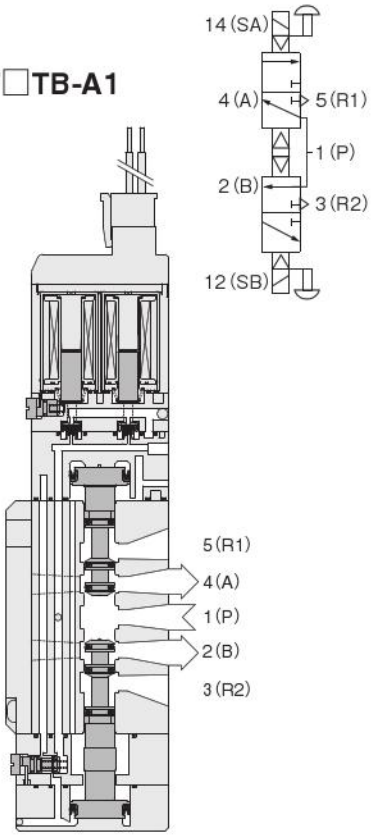


Normally closed (NC) & normally open (NO)

**F□TC-A1**

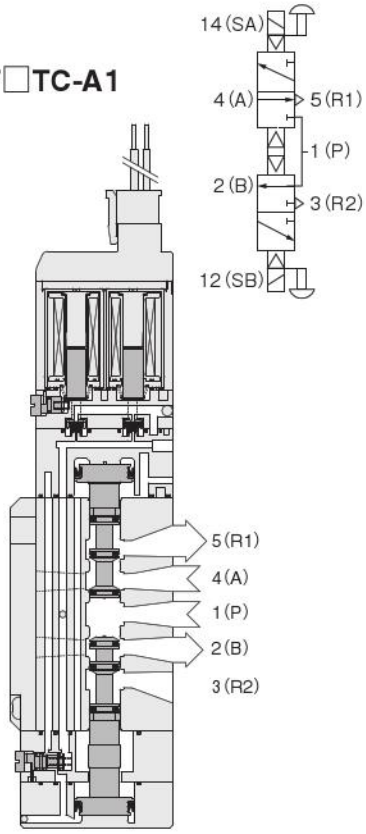

## Solenoid

### Single and double solenoid switching procedure

By switching the manual override, model **F□T1** (2-position valve) can be used as either a single solenoid valve or a double solenoid valve (switching not possible with a 3-position valve and a tandem 3-port valve). Note that the **F□T1** is set to the single solenoid specification at shipping.

#### Switching from a single solenoid valve to a double solenoid valve

**1.** As shown in Fig.1, insert the flatblade edge of a small screwdriver into the gap between the valve and the cover, and then peel it off and remove the cover.

**Caution**: As shown in Fig.1, make sure to insert a small screwdriver from the side of the valve cover. The cover claw may be damaged when the cover is removed from the direction of the valve stem. Never remove the cover for any reason other than valve function switching.

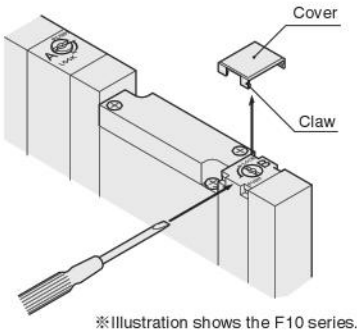


※Illustration shows the F10 series.

**Figure 1**

**2.** As shown in Fig.2, use a small screwdriver, etc. to turn the manual override on the B side by 90 degrees in the counterclockwise direction, so that the manual override button's slit is horizontal, as shown on the right side of the figure. Then the unit can be used as a double solenoid valve. When using it as a double solenoid valve, the button is used as the manual override button for the B side.

**Caution**: When using it as a double solenoid valve, do not attach the cover that was removed in Fig. 1.

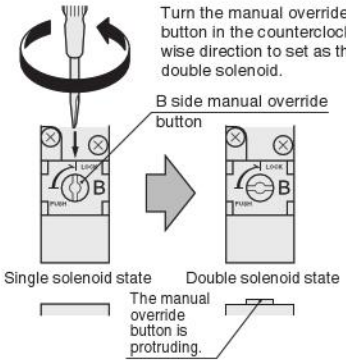


**Figure 2**

#### Switching from a double solenoid valve to a single solenoid valve

As shown in Fig.3, use a small screwdriver, etc. to push lightly against the manual override button, and then turn it by 90 degrees in the clockwise direction, so that the manual override button's slit is in the vertical direction, and then attach the cover.

**Caution**: The cover has directionality (F15 and F18 series only). When attaching, always align the detent on the back of the cover with the manual override button's slit, as shown in Fig.4.

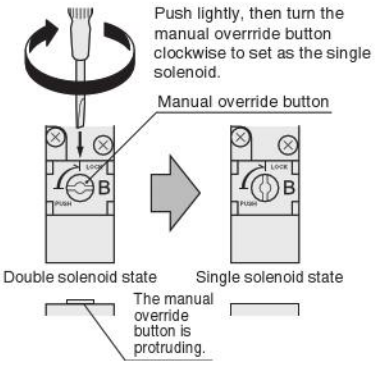


**Figure 3**

#### Note about the wiring for the above switching

See the "Wiring instructions" to the right.

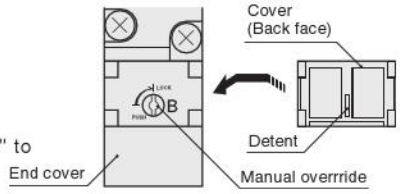


**Figure 4**

### Wiring instructions (When used as a single unit, non-plug-in type manifold)

#### 1. Attaching and removing plug connector

Use fingers to insert the connector into the pin, push it in until the lever claw latches onto the protruded section of the connector housing, and complete the connection.
To remove the connector, squeeze the lever along with the connector, lift the lever claw up from the protruded section of the housing, and pull it out.

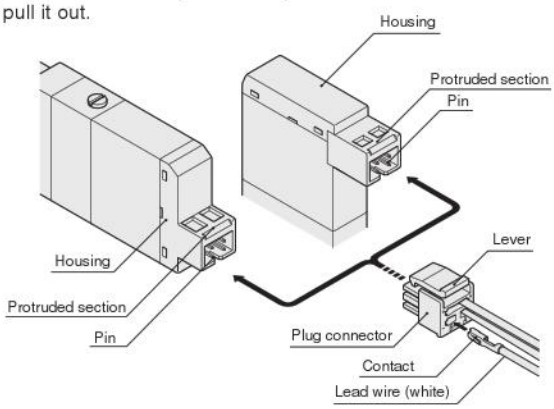


**Cautions:** **1.** When removing the connector, confirm that the lever claw is positively disengaged from the protruded section before pulling out. The housing may be damaged if it is pulled out while engaged with the protruded section.

**2.** The plug connector lead wires for model **F □ T1** (2-position valve) are set to the single solenoid specification at shipping (for plug connector types).
When switching from a single solenoid to a double solenoid specification for use, disconnect the plug connector from the valve, check the hook directions on the lead wire (white) with the contacts, and then insert the lead wire into the plug connector's B side □ hole (see the illustration above). Use the same procedure to switch the manifold type single solenoid to a double solenoid specification.

**3.** When using the plug-in type manifold, caution should be exercised that even if the valve has been switched to a double solenoid, no power will be supplied to the B side solenoid unless the valve base wiring is set to the double wiring.

#### 2. Attaching and removing plug connector and contact

**● Attaching**

Insert the contact with a lead wire into a plug connector □ hole until the contact hook latches on the connector and is secured to the plug connector. Confirm that the lead wire cannot be easily pulled out (see the diagram below).

**● Removing**

To remove it, insert a tool with a fine tip (such as a small screwdriver) into the rectangular hole on the side of the plug connector to push down on the hook, and then pull out the lead wire. When re-using the contacts, restore the hook back so that they spread outward.

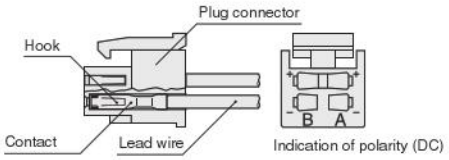


#### 3. Common terminal and short bar

A short bar is attached to the plug connector to ensure that the solenoid A and B wiring are positive common. Do not remove the short bar.

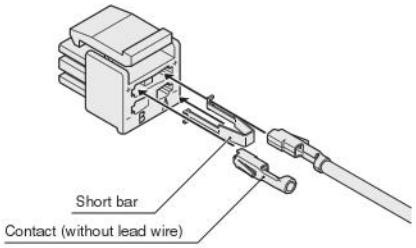

## 4. Crimping of lead wire and contact

To crimp lead wires into contacts, strip off 4 mm [0.16 in.] of the insulation from the end of the lead wire, insert it into the contact, and crimp it. Be sure to avoid catching the insulation on the exposed wire crimping section.

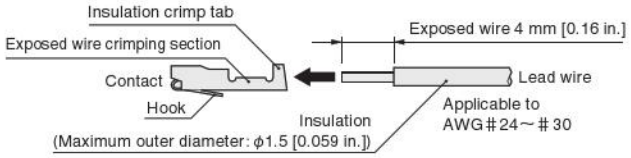


**Cautions: 1.** Do not pull hard on the lead wire.
**2.** For crimping of lead wire and contact, always use a dedicated tool.
Contact: Model 706312-2MK Manufactured by Sumiko Tech, Inc.
Crimping tool: Model F1 (for 706312-2MK) Manufactured by Sumiko Tech, Inc.

## 5. F10, F15 Common connector assembly

Using a common connector assembly for solenoid valves for a manifold provides common wiring for all the solenoid valves and greatly reduces wiring work.
The common connector assembly types are determined by looking at them from the lead wire side; the right end one is A type, the left end one is C type, and all the others are B type (see Fig. 5). (see the illustration below).

### ● For positive common

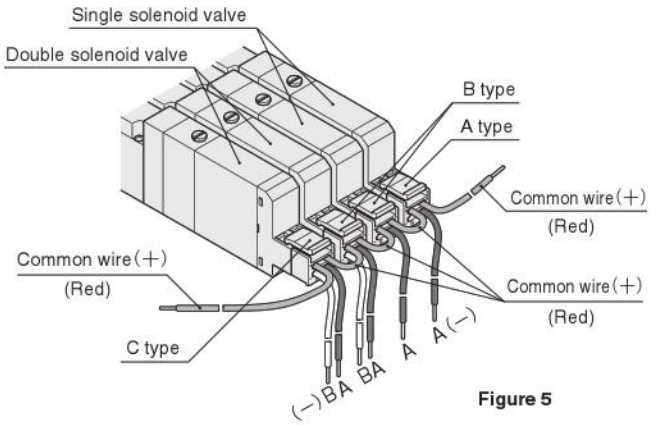


**Figure 5**

### ● For negative common (F10, F15 series only) Note

In the new F10, F15 series, you can order the separately sold common connector assembly for use with negative common specification.

Note: Cannot be used with the conventional F10, F15 series.

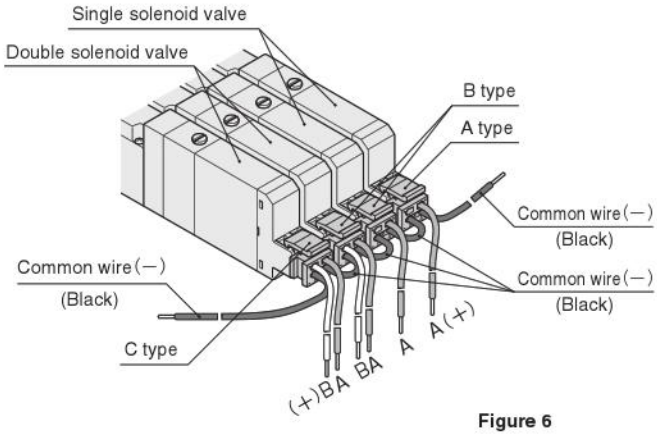


**Figure 6**

If ordering the common connector assembly, order from the common connector assemblies listed below.

### ● For positive common (F10 and F15 series)

**A type Model: JAZ-PA□※**

Red Common wire (+)
Black A side (−)
White B side (−) (Insert when using as a double solenoid)

**B type Model: JAZ-PB□※**

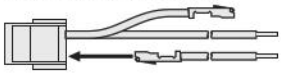

Red Common wire (+)
Black A side (−)
White B side (−) (Insert when using as a double solenoid)

**C type Model: JAZ-PC□※**

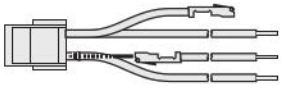

Red Common wire (+)
Black A side (−)
White B side (−) (Insert when using as a double solenoid)
Red Common wire (+)

Note: White lead wire is not available for **JAZ0-P□□**.

※ Lead wire length **Blank**: 300 mm [11.8 in.]
**3**: 3000 mm [118 in.]

### ● For negative common (F10 and F15 series)

**A type Model: JAZ-MA□※**

Black Common wire (−)
Red A side (+)
White B side (+) (Insert when using as a double solenoid)

**B type Model: JAZ-MB□※**

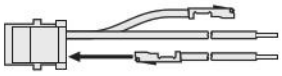

Black Common wire (−)
Red A side (+)
White B side (+) (Insert when using as a double solenoid)

**C type Model: JAZ-MC□※**

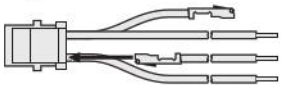

Black Common wire (−)
Red A side (+)
White B side (+) (Insert when using as a double solenoid)
Black Common wire (−)

**Single negative common plug connector unit**
**Model: JAZ-CM□※**

※ Lead wire length **Blank**: 300 mm [11.8 in.]
**3**: 3000 mm [118 in.]

## 6. Common connector assembly for F18 (positive common specification only)

For adding units after mounting the connector assembly for the manifold, order the appropriate common connector assembly shown below.

**A type Model: FZ-PA□※**

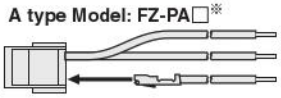

Red Common wire (+)
Black A side (−)
White B side (−) (Insert when using as a double solenoid)

**B type Model: FZ-PB□※**

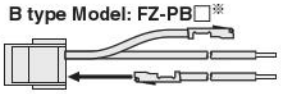

Red Common wire (+)
Black A side (−)
White B side (−) (Insert when using as a double solenoid)

**C type Model: FZ-PC□※**

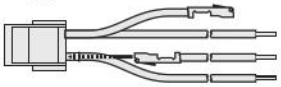

Red Common wire (+)
Black A side (−)
White B side (−) (Insert when using as a double solenoid)
Red Common wire (+)

Note: White lead wire is not available for **FZ0-P□□**.

※ Lead wire length **Blank**: 300 mm [11.8 in.]
**3**: 3000 mm [118 in.]

The common connector assembly types are determined by looking at them from the lead wire side; the right end one is A type, the left end one is C type, and all the others are B type (see Fig. 5).

## 7. Cabtyre cable

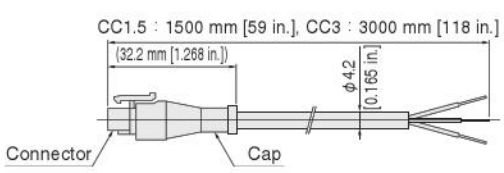


**Caution:** Exercise caution that this is not dust-proof and drip-proof specification.

## Internal circuit

**●For F10, F15 Series**

**Positive common**

| Voltage specification | Internal circuit |
|---|---|
| 24VDC<br>12VDC | 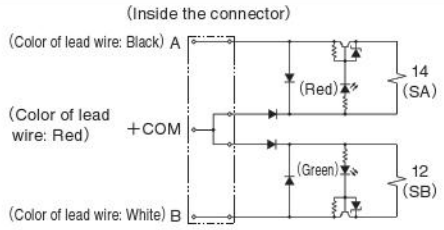 |
| Low-current type<br>24VDC | 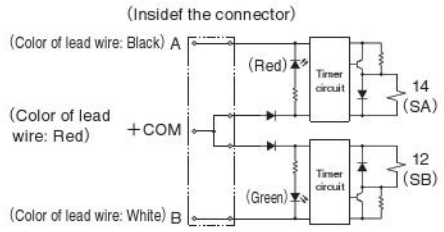 |

**Negative common (-129W)**

| Voltage specification | Internal circuit |
|---|---|
| 24VDC<br>12VDC | 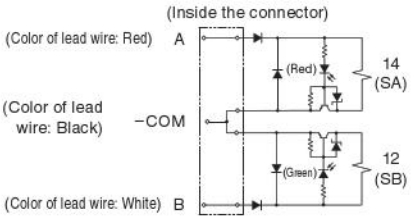 |
| Low-current type<br>24VDC | 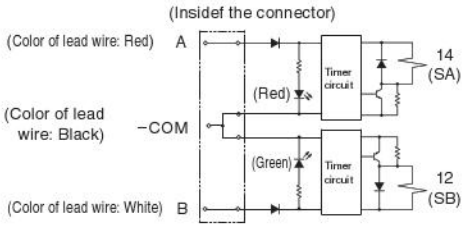 |
| 100VAC<br>120VAC | 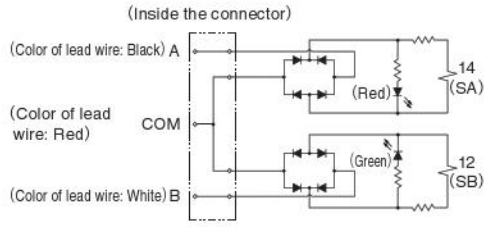 |

**●For F18 Series**

**Positive common**

| Voltage specification | Internal circuit |
|---|---|
| 24VDC<br>12VDC | 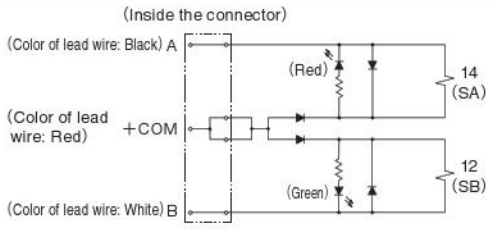 |

**Negative common (-129W)**

| Voltage specification | Internal circuit |
|---|---|
| 24VDC<br>12VDC | 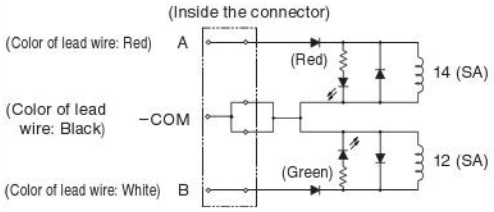 |
| 100VAC<br>120VAC | 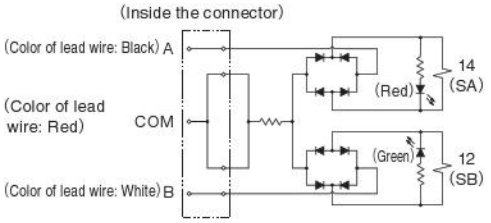 |

**Cautions:**
1. Do not apply megger between the pins.
2. Leakage current inside the circuit could result in failure of the solenoid valve to return, or in other erratic operation. Always use at less than the allowable leakage current shown in the solenoid specifications on p.106, 138, and 172, If circuit conditions etc. cause the leakage current to exceed the allowable leakage current, consult us.
3. For the double solenoid specification, avoid energizing both solenoids at the same time (except for tandem 3-port valve).
4. For the housing color, standard type is blue and low-current type is light blue (F18 is black).
5. The low-current type will not operate if the power voltage is gradually increasing. Always apply a suitable voltage.
6. For the T0 type, there is one solenoid.

●**For F15, 18 Series DIN connector type**

| Voltage specification | Internal circuit |
|---|---|
| 24VDC<br>12VDC | DIN connector type with indicator<br>Order code:**-39L**<br>(Inside of the DIN connector)<br> 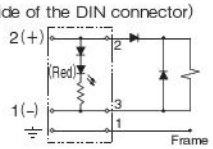 |
| 120VAC<br>240VAC | DIN connector type with indicator<br>Order code:**-39L**<br>(Inside of the DIN connector)<br> 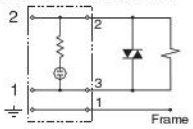 |

**Cautions: 1.** Do not apply megger between the pins.
**2.** Leakage current inside the circuit could result in failure of the solenoid valve to return, or in other erratic operation. Always use at less than the allowable leakage current shown in the solenoid specifications on p.139, and 173. If circuit conditions etc. cause the leakage current to exceed the allowable leakage current, consult us.
**3.** For the double solenoid specification, avoid energizing both solenoids at the same time.

## PC board manifold

When connecting a power line to the power supply terminal on the PC board manifold, care should be taken in regard to the following points when connecting.

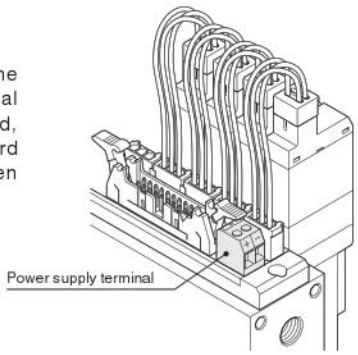


Terminal screw tightening torque: 0.4 N·m [3.5 in·lbf]
Stripped wire length: 7 mm [0.28 in.]
Connecting wire size: 0.13～2.5 mm$^2$ [0.00020～0.00388 in.$^2$]
AWG: No.26...14

When planning to use crimp-style terminals, use bar terminals.
Recommended crimp-style terminals (bar terminals):
Manufactured by Nichifu, Inc.
Model BT1.25-9-1 (for 0.25～1.65 mm$^2$ [0.00039～0.00256 in.$^2$])

## Wiring of the terminal block

Care should be taken with the terminal screw tightening torque. Overtightening beyond the tightening torque could result in breakage.

Terminal screw tightening torque: Max. 49.0 N·cm [4.3 in·lbf].

## Operating principles for the low-current type

The low-current type uses a timer circuit, as shown on the previous page, that achieves power consumption savings by switching to a holding operations mode after a certain period of time to operate at about 1/4 of the starting power consumption.

● **Power waveform**

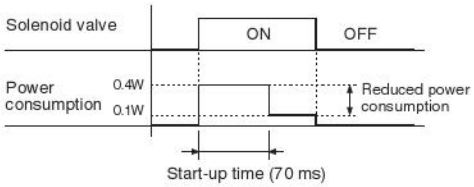


## Precautions for use of the double solenoid

When using models **F□T1** or **F□T2** (2-position valve) as double solenoid valves, caution should be exercised as energizing the A side solenoid or pushing the manual override button on the A side, while pushing the B side manual override button or in a locked state, or energizing the solenoid on the B side, will cause the valve to switch over the valve position. (At that time, the valve will operate in the same state as the single solenoid valve.)

# Manual override

## Manual override button (locking and non-locking dual use type)

To lock the manual override, use a small screwdriver to push down the manual override button all the way down and turn it clockwise 90 degrees. To release the manual override, turn the button 90 degrees counterclockwise, which will release the manual override lock by spring action and return it to its normal position. To operate the unit in the same way as the non-locking type, leave the manual override button unturned.

**Cautions: 1.** The F series valves are pilot type solenoid valves. As a result, the manual override cannot switch the main valve without air supplied from the 1(P) port (X(P2) port for external pilot type).
**2.** Always release the lock of the manual overrides before commencing normal operation. Caution should be exercised to release the lock of the manual override on the B side that also works as the switching button between the single solenoid and double solenoid (excluding the 3-position valve and tandem 3-port valve). For details, see "Switching from a double solenoid valve to a single solenoid valve" on p.18.
**3.** Do not attempt to operate the manual override button with a pin or other object having an extremely fine tip. It could damage the manual override button.
**4.** Take care to avoid excessive turning of the manual override button, it could damage the override.
**5.** When operating the solenoid valve's manual override button for maintenance etc. always confirm that the solenoid valve's override button has been restored to its normal position, and that the main valve is in the required switching position before restarting operations.

## Manual override lever (locking and non-locking dual use type)

To lock the manual override lever, use fingers to push the lever all the way down and turn it clockwise 90 degrees. To release the manual override, turn the lever 90 degrees counterclockwise, which will release the manual override lock by spring action and return it to its normal position. To operate the unit in the same way as the non-locking type, leave the lever unturned.

**Caution:** Model **F□T1** (2-position valve) has a manual override lever on the A side, and a manual override button with cover on the B side.
Model **F□T2** has a manual override lever on the A side only, and a manual override button on the B side.
The 3-position valve has manual override lever on both the A and B sides.

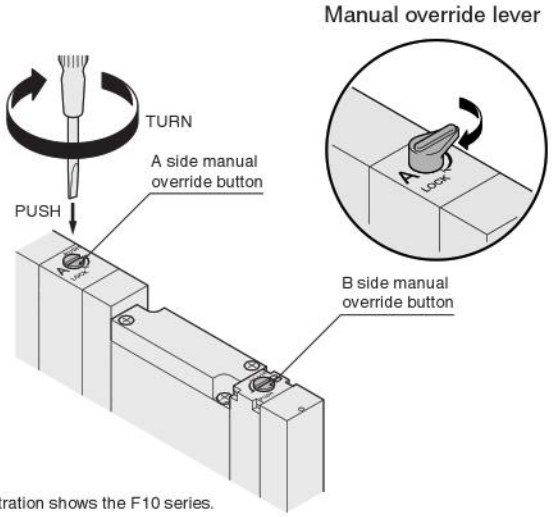


※Illustration shows the F10 series.

## Locking protruding type -83

Use a small screwdriver or the fingers to press down and rotate the manual override button by at least 45 degrees, to lock in place. Either rotation direction is acceptable. In the locked position, rotate further the manual override which will release the manual override lock by spring action and return it to its normal position. If the manual override is not rotated, the unit can be operated in the same way as the non-locking type.

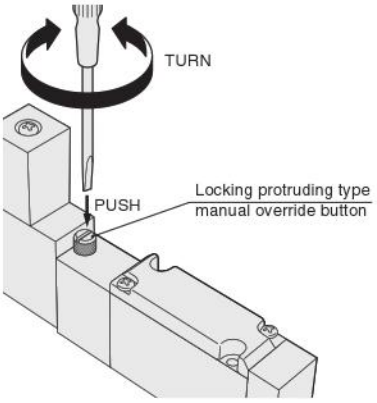

## DIN connector

## Wiring instructions

Remove the cover mounting screws, and lift the terminal cover off from the solenoid. Use a screwdriver, etc., to push strongly against the terminal body through the hole of the terminal cover's mounting screw, and remove the terminal body.
Slip a cable ground, washer, and cable gasket over a cable, insert the cable into the terminal cover's wiring port, and connect the lead wire to the terminal body (screwdriver blade width of about 3 mm [0.12 in]).

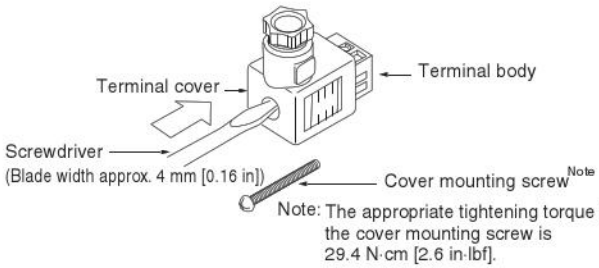


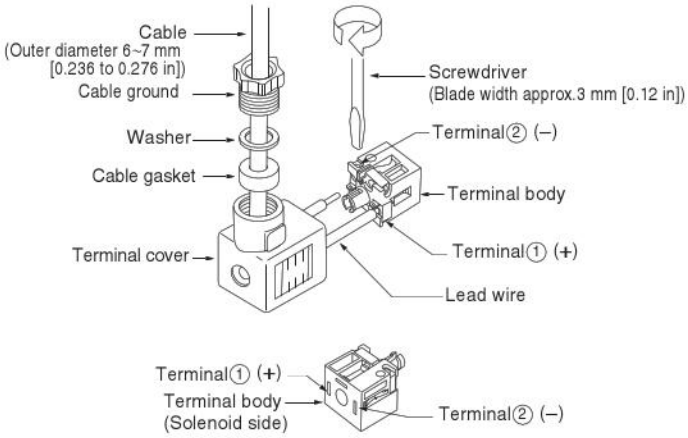


※For the DC24V solenoid with surge suppression, connect (+) to terminal ①, and (–) to terminal ②.

## 3-port valves

While the F series is a 5-port valve (excluding tandem 3-port valve), it can be used as a normally closed (NC) or normally open (NO) 3-port valve by plugging one of either outlet port 4(A) or 2(B). In this case, leave the exhaust ports 3(R2) and 5(R1) open for use. It can also be used as a double solenoid type 3-port valve.

**When using a single use fitting block or female thread block for 3-port**

In the F10 and F15 series, a single use fitting block and female thread block for 3-port with one plugged port can be selected at the time of order. (Note: Not available for F18 series.)

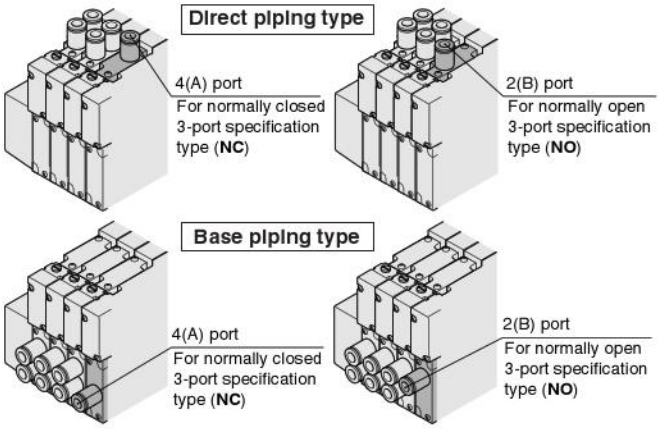


| Fitting type | -※ ※ A | -※ ※ B |
|---|---|---|
| Switching type | Normally closed (NC) | Normally open (NO) |
| For single solenoid setting | 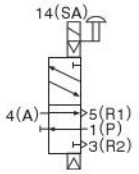 | 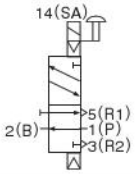 |
| For double solenoid setting | 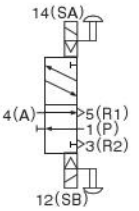 | 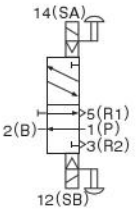 |

**When using a plug**

The F10, F15, and F18 series can be used as either a normally closed (NC) or normally open (NO) 3-port valve by plugging either outlet port of 4(A) or 2(B).

| Plug position | When the 2(B) port is plugged | When the 4(A) port is plugged |
|---|---|---|
| Switching type | Normally closed (NC) | Normally open (NO) |
| For single solenoid setting | 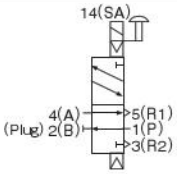 | 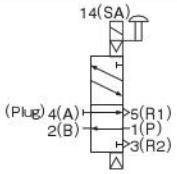 |
| For double solenoid setting | 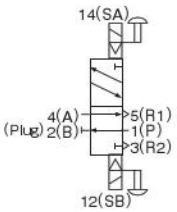 | 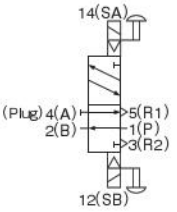 |

## Manifold

### Attaching and removing valves

To remove the valve body from the sub-base or manifold, loosen the valve mounting screws (2 places), and lift it up in the direction of the arrow (see the illustration at right). To install it, reverse the above procedure. The recommended tightening torques for the valve mounting screws are as shown below.

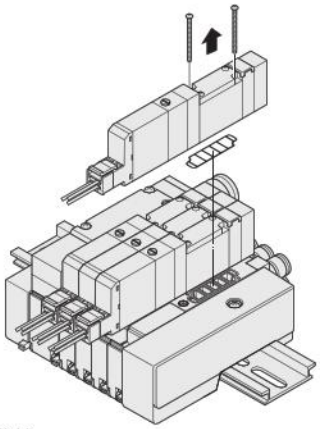

※Illustration shows the F10 series (split manifold).

N·cm [in·lbf]

| Series | Recommended tightening torque |
|---|---|
| F10 | 17.6 [1.6] |
| F15 | 49.0 [4.3] |
| F18 | 49.0 [4.3] |

### Precautions for using manifold

Observe the following precautions when using the split type and serial transmission compatible manifold (except for the monoblock manifold and PC board manifold).

- When using the direct piping type manifold
  Avoid using valves at an operating frequency exceeding 2 Hz, as such use can result in heat-related breakdowns.
- When using the base piping type manifold
  When plugs have been attached on the 4(A) and/or 2(B) ports, avoid using valves at an operating frequency exceeding 2 Hz, as such use can result in heat-related breakdowns.

### Stop valve usage procedure (F10, F15 series)

Mount a stop valve on a manifold to stop the air supply to valves on the individual station. For the operation procedure, use a small screwdriver or the hand to press down and rotate the stop valve manual knob clockwise 90 degrees to lock in place, shutting off the air supply. In the locked position, rotate the stop valve manual knob counterclockwise 90 degrees, and air pressure returns the stop valve manual knob to its original position, releasing the lock. Note that use of the stop valve reduces the flow rate volume by about 30%.

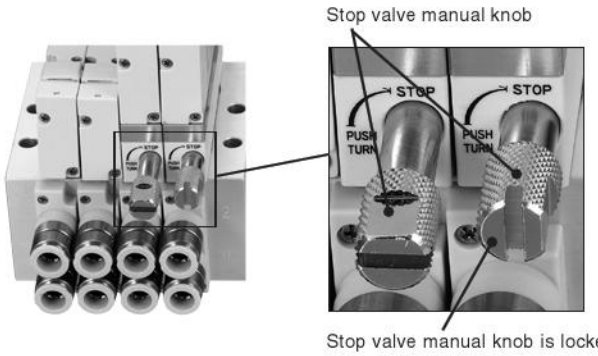


Stop valve manual knob is locked, and air supply shut off.

**Cautions:**
1. Do not disassemble the stop valve.
2. When using a stop valve to remove the valve, be careful of residual pressure in the affected station.
3. When using a stop valve to remove the valve, be aware that exhaust from other stations can be exhausted through the stop valve's exhaust hole. If this will cause a problem during use, when ordering the manifold, select the back pressure prevention valve (**-E1**).
4. To use a stop valve in combination with a back pressure prevention valve, select the combination when ordering the manifold. The back pressure prevention valve (**F1□Z-E1**) in additional parts cannot be installed after purchase.
5. Do not release the locked stop valve manual knob when valves have been removed by using the stop valve.

## Port isolator

In the split manifold, installing port isolators to the 1(P), 3(R2) and 5(R1) ports between each station isolates the air path between stations equipped with port isolators and stations with smaller station numbers. However, a piping block must be placed on both ends.

- Port isolator for the 1(P) port (Model : **F□Z-SP**) — Can supply two different pressures
- Port isolators for the 3(R2), 5(R1) ports (Model : **F□Z-SR**) — Can isolate exhaust air (prevents exhaust interference)
- Port isolators for the 1(P), 3(R2), 5(R1) ports (Model : **F□Z-SA**) — Can supply two different pressures, and can isolate exhaust air (prevents exhaust interference)

※□ denotes valve size.

〔F10, F15 series〕

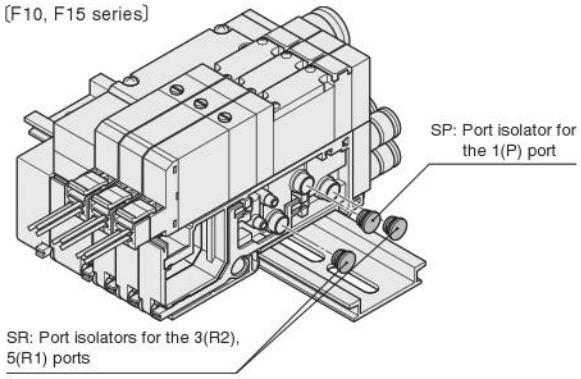


〔F18 series〕

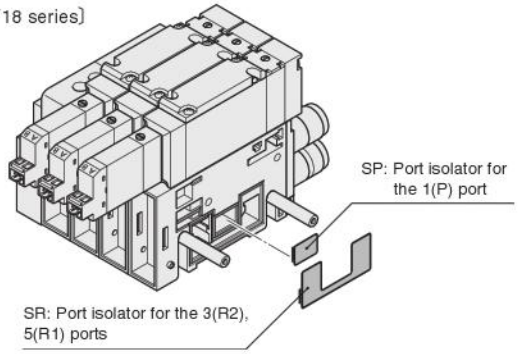


**Caution:** Installing port isolators requires the disassembly and re-assembly of manifolds. See the disassembly illustration, unit adding procedure, and cautions on p.28-33.
However, since the F18 series serial transmission compatible manifold cannot be disassembled, port isolators cannot be installed on it after purchase.

## Precautions for the use of individual air supply and exhaust spacers

By mounting an individual air supply or exhaust spacer on the manifold, the air supply or exhaust can be operated individually on the unit. It is also effective in preventing erratic operation due to back pressure. Caution should be exercised when spacers are used, as the effective area is reduced by about 30%. If mounting additional spacers to an existing unit, observe the following items:

### ● Spacer mounting procedure (F10 series)

① Loosen the valve mounting screws where the individual air supply or exhaust spacer will be installed, and remove the valve.
② Install the gaskets and exhaust valve provided with the individual air supply or exhaust spacer, and use the mounting screws provided to secure the valve on the manifold (see Fig. 7).

Remark: When attaching fittings to the F10 spacer, use the recommended fittings shown below:
TSH4-M5M, TSH4-M5, TSH6-M5M, TS4-M50, TS4-M5M

### ● Spacer mounting procedure (F 15 and F18 series)

① Loosen the valve mounting screws where the individual air supply or exhaust spacer will be installed, and remove the valve.
② Open the cover of the manifold, and pull out the plug-in connector in the near side direction (for the plug-in type) (see Fig. 8).
③ Insert the plug-in connector firmly into the connector attaching section of the individual air supply or exhaust spacer, and then close the cover, while watching to ensure that the lead wires are not caught by the cover (for the plug-in type) (see Fig. 9).
④ Attach the gasket and exhaust valve provided with the individual air supply or exhaust spacer, and use the mounting screws provided to mount the valve on the manifold.

**Cautions:** Locations where the spacers are mounted make the valve height higher by the height of the spacer (see the dimensions below).

### ● Muffler for the individual exhaust spacer

A muffler for the individual exhaust spacer is available.
For dimensions, see p.133, 166, and 196.

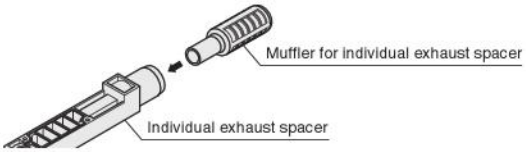


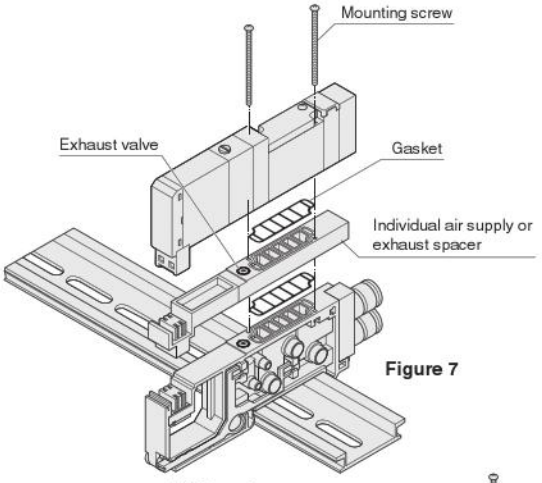


Figure 7

F10 series
(Illustration shows the split manifold plug-in type)

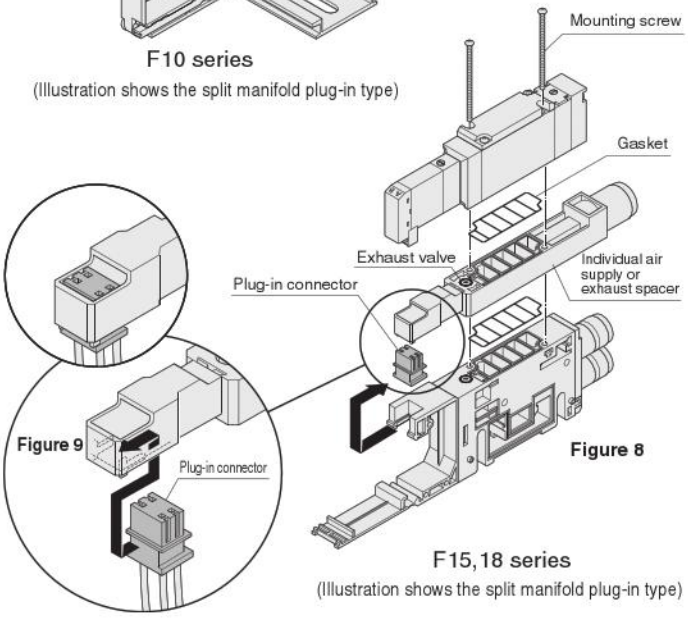


F15,18 series
(Illustration shows the split manifold plug-in type)

### ● Dimensions Unit: mm [in.]

**F10Z-N□□** (For F10 series) Mass 7 g [0.25 oz.]

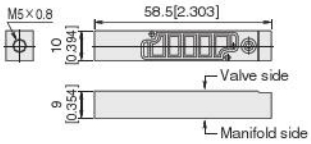


**F10Z-P□□** (For F10 series) Mass 9 g [0.32 oz.]

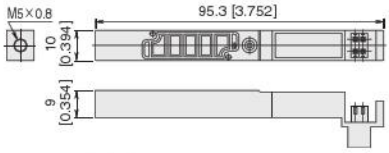


**F15Z-N□□** (For F15 series) Mass 26 g [0.92 oz.]

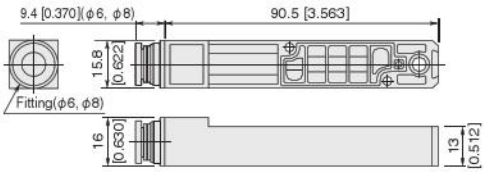


**F15Z-P□□** (For F15 series) Mass 29 g [1.02 oz.]

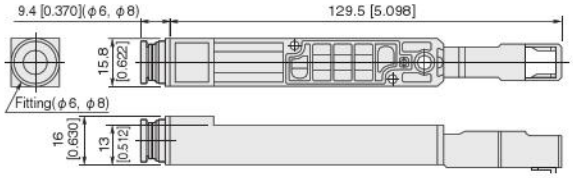


**F18Z-N□□** (For F18 series) Mass 41 g [1.45 oz.]

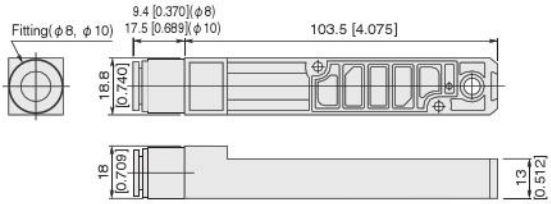


**F18Z-P□□** (For F18 series) Mass 44 g [1.55 oz.]

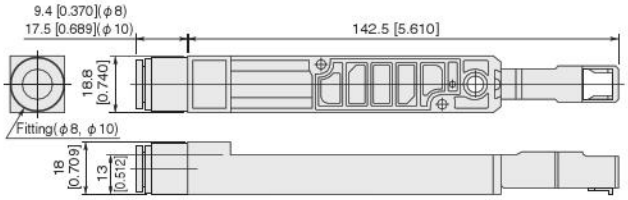

## Precautions for use of the back pressure prevention valve (F10, F15 series)

A back pressure prevention valve can be mounted on the manifold to prevent erratic operation of the cylinder due to exhaust from other valves. It is particularly effective when using a single acting cylinder or when using an exhaust center valve. Note that when a back pressure prevention valve is used, the OUT-EXH flow rate volume is reduced by as much as 30%. In addition, since the back pressure prevention valve allows back pressure leaks, be careful to avoid letting the manifold exhaust port throttle the exhaust air. When mounting the back pressure prevention valve on an existing system, observe the following points.

① Loosen the valve screws mounting the back pressure prevention valve, and remove the valve.

② For a monoblock manifold, temporarily remove the gasket between the valve and manifold, insert the back pressure prevention valve into the exhaust port, attach the gasket back in place, and then mount the valve.

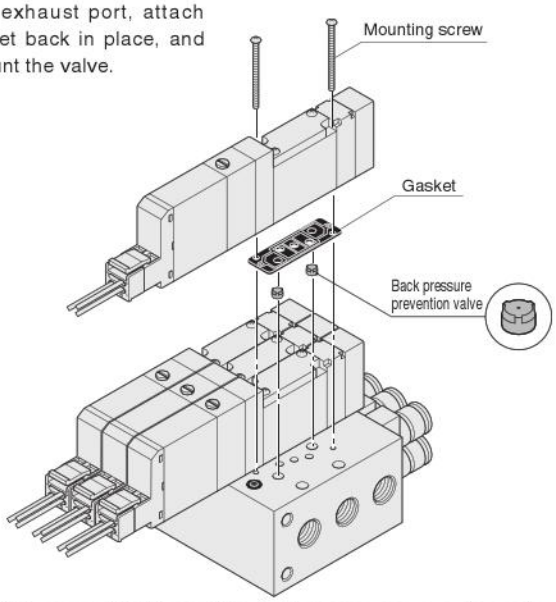


For a split type manifold, insert the back pressure prevention valve into the exhaust port, attach the dedicated gasket and plate provided, and then mount the valve.

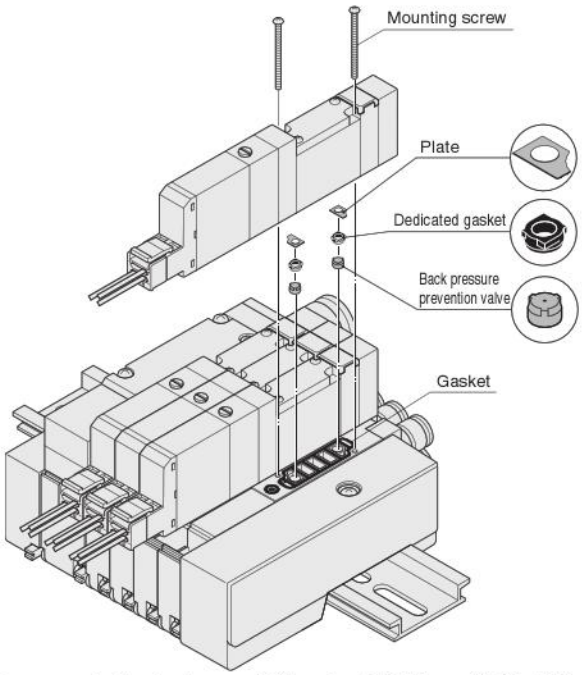


Mounting screw tightening torque: F10 series 17.6 N・cm [1.6 in•lbf]
F15 series 49.0 N・cm [4.3 in•lbf]

## Changing the connector bracket direction (F10, F15 series)

Remove the wiring block mounting screws, position the connector bracket as shown in the illustration, and rotate the connector 90 degrees so that it faces outward. The connector can be changed to either the top surface (vertical) wiring or side surface (horizontal) wiring positions.

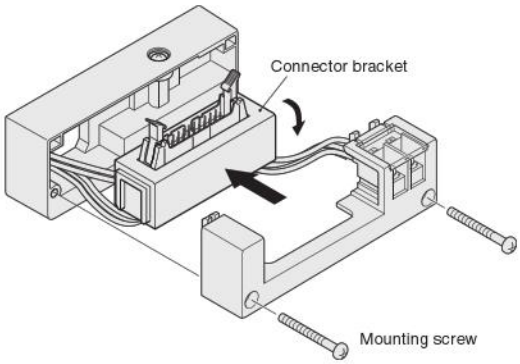


Mounting screw tightening torque: 49 N・cm [4.3 in•lbf]

## Securing the manifold in place

When securing a DIN rail mounting type manifold to the installation surface, use the number of screws table below as a guide, depending on the installation direction and with or without vibration, to secure the DIN rail in place using screws. If not secured in place, be aware that there is a possibility of air leaks or other problems occurring.

| Mounting condition | Number of screws | | | |
|---|---|---|---|---|
| Horizontal mounting | 2 screws or more | | | |
| Vertical mounting or vibration area | 2 to 5 units | 6 to 10 units | 11 to 15 units | 16 to 20 units |
| | 2 screws or more | 3 screws or more | 4 screws or more | 5 screws or more |

## Fitting

### Piping

**1. Procedure for switching between the base piping type and the direct piping type**

Base piping and direct piping can be switched by replacing the plate with a fitting block or a female thread block (see Fig. 10).

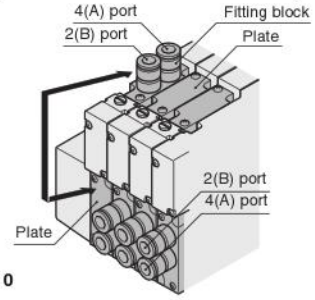


**Figure 10**

※Illustration shows the F10 series.

**Cautions:** **1.** Firmly tighten the screws after completing a re-combination. Recommended tightening torques are shown below.
**2.** Perform piping carefully in regards to the locations of each connection port (see Figs. 11, 12).
**3.** Care should be taken not to lose the gaskets while changing plates.

N·cm [in·lbf]

| Series | Recommended tightening torque |
|---|---|
| F10 | 17.6 [1.6] |
| F15 | 49.0 [4.3] |
| F18 | 49.0 [4.3] |

● **Direct piping type**

For **F10**, **F15** series

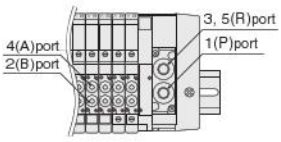


※Diagram shows the F10 series.

For **F18** series

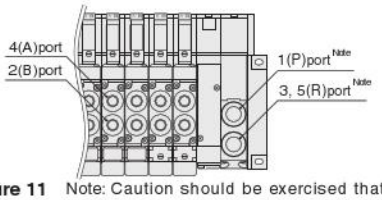


**Figure 11** Note: Caution should be exercised that the positions of the 1(P) and 3, 5(R) ports are reversed from their positions in the F10 and F15 series.

● **Base piping type**

Port locations for **F10**, **F15**, **F18** series are as shown in Fig. 12.

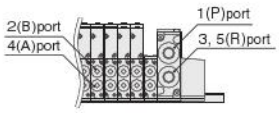


**Figure 12**

※Diagram shows the F10 series.

**2. Attaching fittings to female thread blocks**

When attaching fittings to female thread blocks, secure with the tightening torques shown below or less.

| Screw size | Tightening torque N·cm [in·lbf] |
|---|---|
| Rc 1/8, NPT1/8 | 686 [60.7] |
| Rc 1/4, NPT1/4 | 882 [78.1] |

※For M5 and -10-32UNF, tighten at the recommended torques for the fittings used.

**3. Attaching fittings to piping blocks〔F18Z(G)-PM(P)〕**

To attach fittings to the female thread type piping block of the F18 series, remove the piping block portion (the triangular-shaped block portion), screw the fittings into the 1(P) and 3, 5(R) ports while holding the piping block by applying a wrench to its metal portion. The tightening torque for the mounting (two M3 screws) of the piping block after the fittings have been attached should be 49.0 N·cm [4.3 in·lbf].

### Dual use fittings (With dual use fitting blocks)

The F series dual use fitting blocks employ dual use fittings for different tube sizes, which can connect tubes of 2 different outer diameters.

● **Attaching and removing tubes**

When connecting tubes, insert an appropriate size tube until it contacts the tube stopper, and then lightly pull it to check the connection.
For tube removal, push the tube against the tube stopper, then for large tube sizes, push on the release ring and at the same time pull the tube out. For small tube sizes, push on the outer ring by pressing the release ring and simultaneously pull the tube out (see Fig. 13).

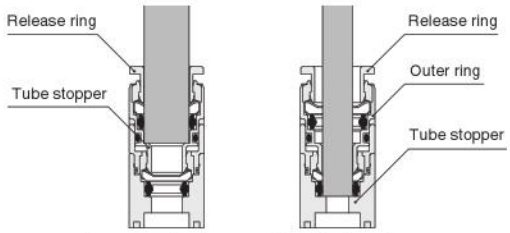


**Large tube size** **Small tube size**

**Figure 13**

### Usable tubes

Either a nylon or urethane tube can be used.
Use tubes with an outer diameter tolerance within ± 0.1 mm [0.004 in.] of the nominal diameter, and ensure the ovalness (difference between the large diameter and small diameter) is 0.2 mm [0.008 in.] or less.
(Using a Koganei tube is recommended.)

**Cautions:** **1.** Do not use extra-soft tubes since their pull-out strength is significantly reduced.
**2.** Only use tubes without scratches on their outer surfaces. If a scratch occurs during repeated use, cut off the scratched portion.
**3.** Do not bend the tube excessively near the fittings.The minimum bending radii for nylon tubes are shown in the table below.
**4.** When attaching or removing tubes, always stop the air supply. In addition, always confirm that air has been completely exhausted from the manifold.

mm [in.]

| Tube size | Minimum bending radius |
|---|---|
| φ4 | 20 [0.8] |
| φ6 | 30 [1.2] |
| φ8 | 50 [2.0] |
| φ 10 | 80 [3.1] |

## F10 and F15 Series Disassembly Diagram of Split Manifold Non-Plug-in Type

Figure 1

Disassembly example: For F10 series

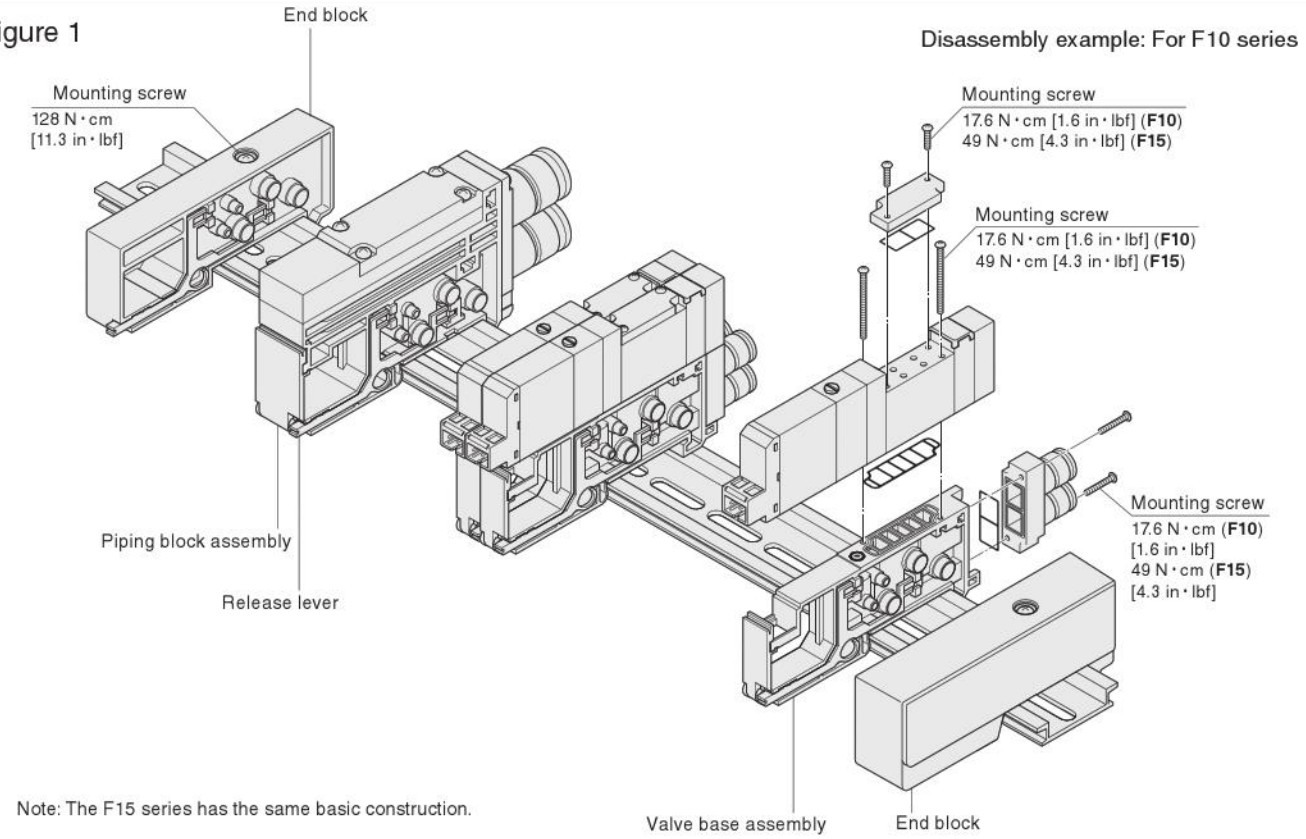


Note: The F15 series has the same basic construction.

## Manifold Unit Adding Procedure (F10 and F15 Series Non-Plug-in Type)

### ■ Adding a valve base unit

Use the valve base assembly for adding valve base units.

① Loosen the mounting screw on the end block until it can slide (see Fig. 1).
Note: For the F15 series, loosen the mounting screws on both the left and right end blocks (2 screws each).

② Press the release lever on the valve base assembly where the new unit is to be added, and disconnect the link between the bases.

③ Mount the valve base assembly to be added on the DIN rail as shown in Fig. 2.

④ Return the release lever of the valve base assembly disassembled in step ② to its normal position, as shown in Fig. 3. In addition, set the release lever for the valve assembly being added to the same position, then press the bases together until they connect and click into place.

⑤ Press the bases together from both sides to ensure that there is no gap between them, and then tighten the end block mounting screws, and install the units in place on the DIN rail (see Fig. 5). Tightening torque: 128 N・cm [11.3 in・lbf]
Notes: 1. Always follow the steps shown in Fig. 4 when tightening the end block mounting screws for the F15 series.
2. Confirm that the DIN rail mounting hooks secure the DIN rail (see Fig. 5).

### 【Caution】

- Always cut off the power and air supply before working. In addition, always confirm that air has been completely exhausted from the manifold.
- Care should be exercised to prevent the gasket from becoming caught or lost.
- Before supplying air to the manifold, always confirm that the bases are connected, the end block mounting screws are tightened, etc. Supplying air when either of the end blocks is not secured to the DIN rail could result in air leaks or in separation of manifold bases.
- When there are a large number of valves simultaneously delivering air to the secondary side, or when there are a large number of valves overall, we recommend using 2 air supplies and exhausts (on each side).

Adding units to the piping block assembly should be performed in the same way as adding units of the valve base assembly.

Figure 2

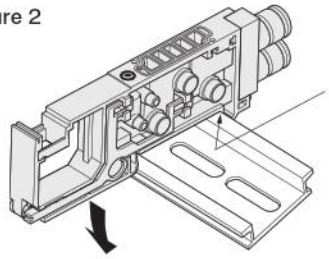


Figure 3

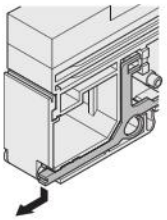

Pressing down lightly on the release lever will return it to its normal position.

Figure 4

● **Tightening order of screws (for F15 series only)**

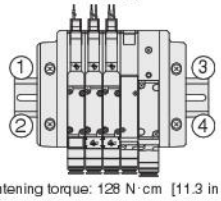


Tightening torque: 128 N·cm [11.3 in·lbf]

Figure 5

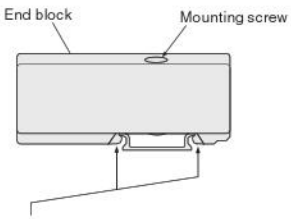


Use hooks on both sides to secure the DIN rail in place.

● **Removing the F15 series end block from the DIN rail**

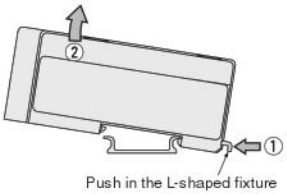


Push in the L-shaped fixture

※ The end block for the F10 series does not include an L-shaped hook. To remove the end block from the DIN rail, loosen the end block mounting screws, and lift it off.

## F18 Series Disassembly Diagram of Split Manifold Non-Plug-in Type

Figure 1

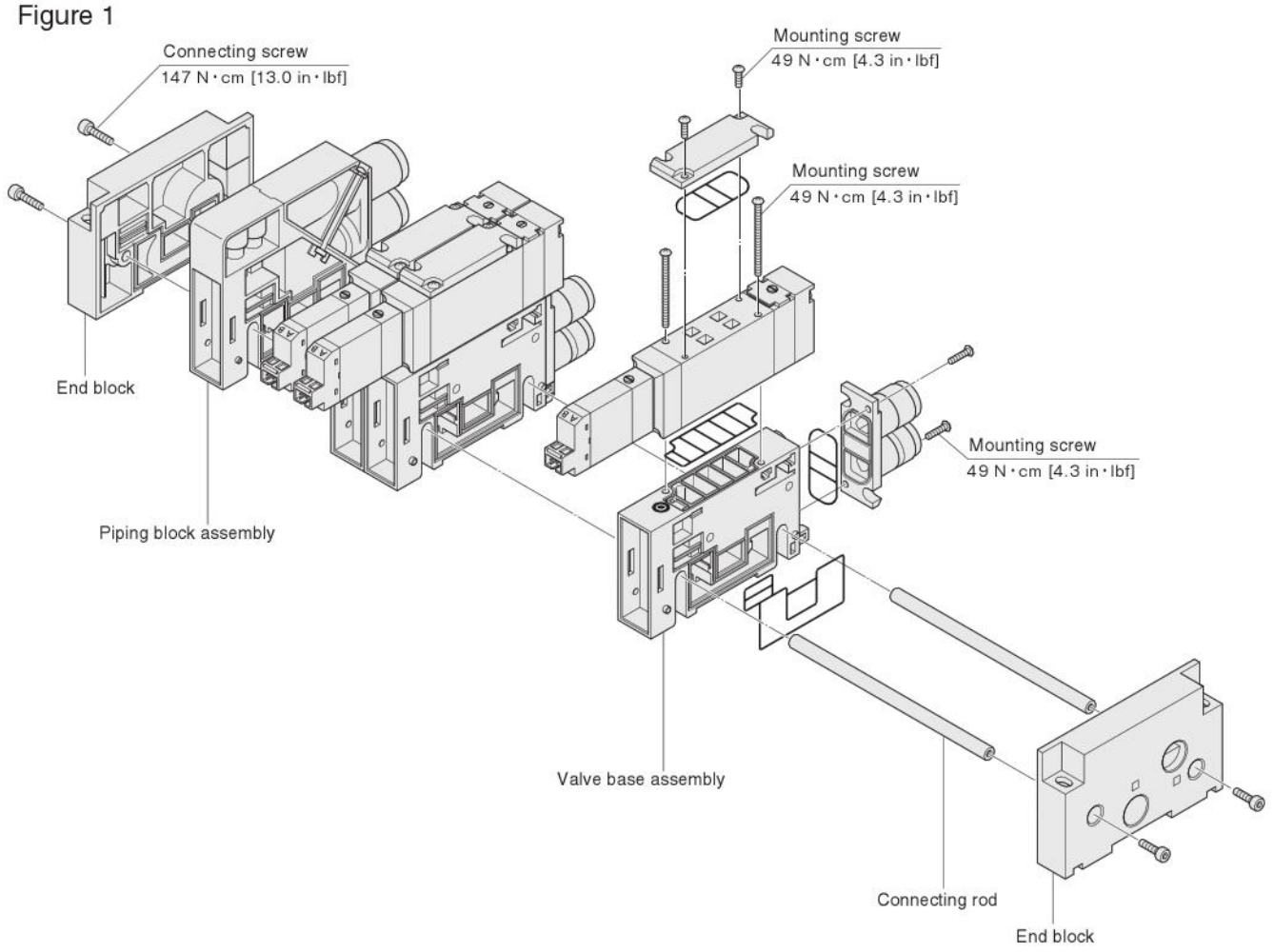


## Manifold Unit Adding Procedure (F18 Series Non-Plug-in Type)

### ■ Adding a valve base unit

Use the valve base assembly and unit-adding connecting rod to add valve base units.

① Remove the connecting screws on the end block and separate the end block from the manifold (see Fig. 1).

② Install the connecting rods to be added, open up the spaces where the units are being added, position the gaskets onto the valve base assemblies being added, and fit the units on the connecting rods from above. At this time, securely mount the units so that no gap is left between the added valve base assemblies and the upper surface of the connecting rods.

③ Install gaskets onto the end blocks removed in step ①, and retighten the connecting screws. At this time, use a hexagon bar wrench to hold the connecting screws on the opposite side in place so as to prevent the screws from slipping while securing them into place. Tightening torque: 147 N·cm [13.0 in·lbf]

### 【Caution】

- Always cut off power and air supply before working. In addition, always confirm that air has been completely exhausted from the manifold.
- Care should be exercised to prevent the gasket from becoming caught or lost.
- Before supplying air to the manifold, always confirm that the bases are securely connected, the end block connecting screws on both sides are tightened, etc. Supplying air when either of the end blocks is not secured to the DIN rail could result in air leaks or in separation of manifold bases.
- When there are a large number of valves simultaneously delivering air to the secondary side, or when there are a large number of valves overall, we recommend using 2 air supplies and exhausts (on each side).

Adding units to the piping block assembly should be performed in the same way as adding units to the valve base assembly.

## F10 and F15 Series Disassembly Diagram of Split Manifold Plug-in Type

Figure 1

Disassembly example: For F10 series (using flat cable connector)

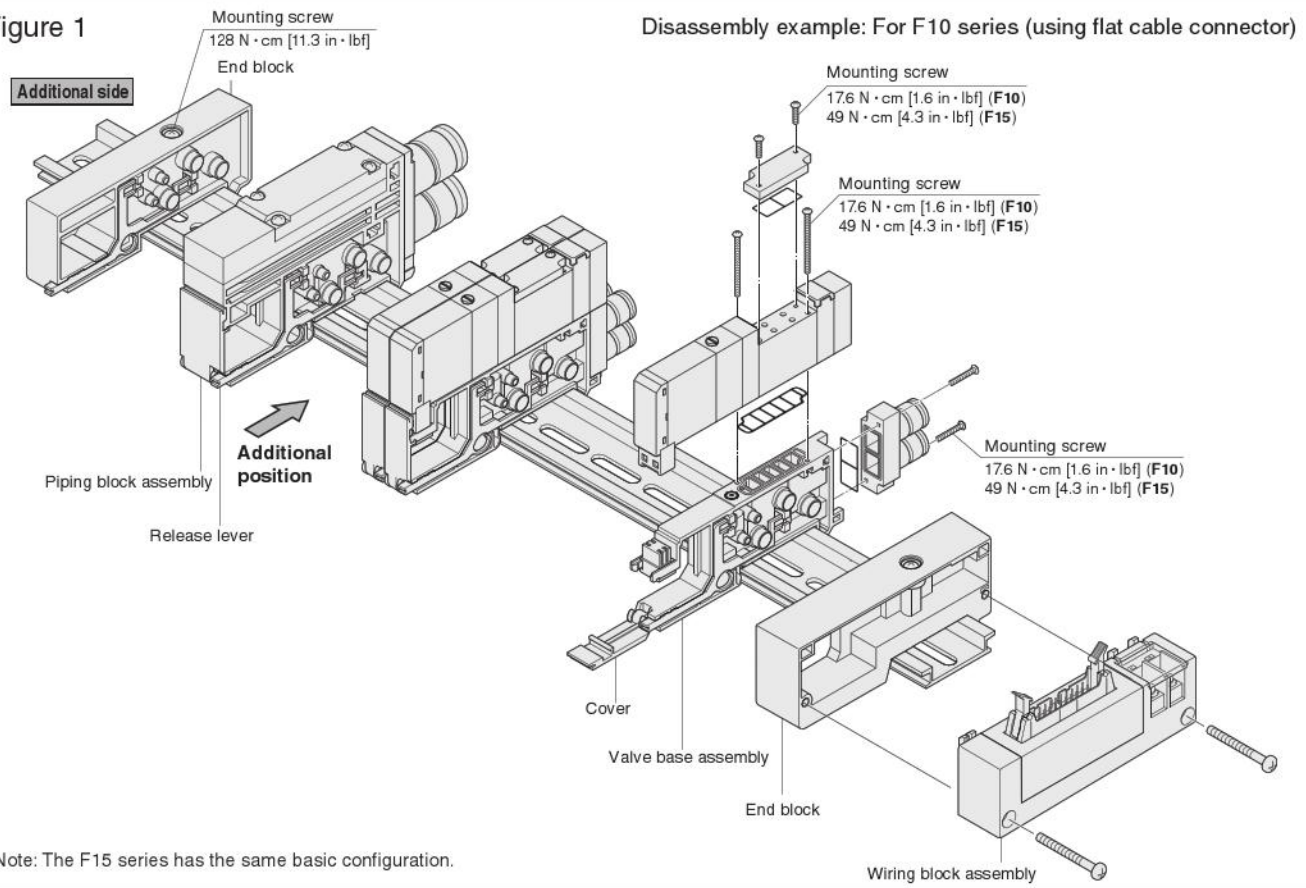


Note: The F15 series has the same basic configuration.

## Manifold Unit Adding Procedure (F10 and F15 Series Plug-in Type)

### ■ Adding a valve base unit

Use the valve base assembly for adding valve base units.

① Loosen the mounting screw on the end block until it can slide (see Fig. 1).

Note: For the F15 series, loosen the mounting screws on both the left and right end blocks (2 screws each).

② Add units on the additional side (with the solenoid on top and its right) shown in Fig. 1. To split up at additional unit locations, push the piping base assembly's release lever, and release the connections between the bases.

③ Mount the valve base assembly to be added on the DIN rail as shown in Fig. 2.

④ Return the release lever of the piping block assembly disassembled in step ② to its normal position, as shown in Fig. 3. Set the release levers on the additional valve bases in the same position, and press all the bases together until they click into place, while watching to ensure that the lead wires are not caught by the cover.

⑤ Press the bases together from both sides to ensure that there is no gap between them, and then tighten the end block mounting screws, and install the units in place on the DIN rail (see Fig. 5). Tightening torque: 128 N・cm [11.3 in・lbf]

Notes: 1. Always follow the steps shown in Fig. 4 when tightening the end block mounting screws for the F15 series.
2. Confirm that the DIN rail mounting hooks secure the DIN rail (see Fig. 5).

Figure 2

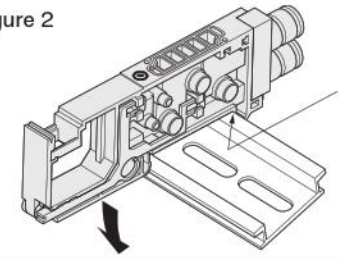

First let the hook latch onto this side, and then press down the base to secure it onto the DIN rail.

Figure 3

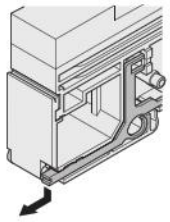

Pressing down lightly on the release lever will return it to its normal position.

Figure 4

● **Tightening order of screws (for F15 series only)**

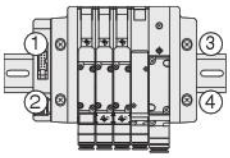


Tightening torque: 128 N・cm [11.3 in・lbf]

Figure 5

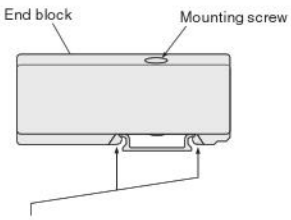


Use hooks on both sides to secure the DIN rail in place.

● **Removing the F15 series end block from the DIN rail**

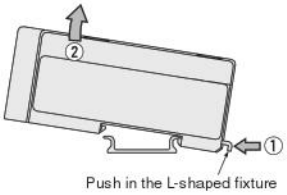


Push in the L-shaped fixture

※ The end block for the F10 series does not include an L-shaped hook. To remove the end block from the DIN rail, loosen the end block mounting screws, and lift it off.

## ■ Wiring Procedure

① Use a flatblade screwdriver to open all of the covers (see Fig. 1). Loosen the mounting screws of the valve next to the valve base to be added, remove the valve, and remove the plug-in connector (see Fig. 6).

② The end terminal lead wire (short red wire) is inserted into the pin insert section (No.3) of the plug-in connector that was removed in step ① (see Fig. 7).
(When shipping, end terminal lead wire is inserted into the plug-in connector of the end unit valve.) Remove this end terminal lead wire, and insert it into the insert section (No.3) of the plug-in connector for the valve base assembly to be added. Next, insert the common wire (red) of this plug-in connector into the insert section (No.3) of the removed plug-in connector.

Note: When inserting the lead wire, confirm that the short bar of the plug-in connector's common wire insert section has been attached.

③ Install each of the wired plug-in connectors in step ② to the valve base, and mount the valve.

④ Remove the wiring block mounting screws and place the connector bracket in the position shown in Fig. 8, then connect the lead wire (white) of the added valve base after confirming the pin locations. (For details, see the "Detailed diagram of wiring block internal connections" on p.34, 35)

⑤ Return the connector bracket to its original position, tighten the wiring block mounting screws in place, and then install the cover while exercising caution that the lead wires are not trapped by the cover.

## 【Caution】

- Always cut off the power and air supply before working. In addition, always confirm that air has been completely exhausted from the manifold.
- When removing lead wires from the plug-in connector, use a tool with a fine tip (such as a small screwdriver) to press lightly on the contact hook from a hole on the side of the plug-in connector, and pull out the lead wire. When re-inserting the lead wire to the connector, spread the contact hooks so that they face outward, and then insert the lead wire into the plug-in connector. At this time, pull the lead wire lightly to confirm that it is securely inserted.
- Always connect the end terminal lead wires (see Fig. 7).
- Care should be exercised to prevent the gasket from becoming caught or lost.
- Before supplying air to the manifold, always confirm that the bases are connected, the end block mounting screws are tightened, etc. Supplying air when either of the end blocks is not securing the DIN rail could result in air leaks or in separation of manifold bases.
- Caution should be exercised as the number of valve units that can be added is limited in the manifold, by the wiring specifications and wiring connection types, etc. For details, see the "Table for maximum number of valve units by wiring specification," on p.66.
- When there are a large number of valves simultaneously delivering air to the secondary side, or when there are a large number of valves overall, we recommend using 2 air supplies and exhausts (on each side).

Adding units to the piping block assembly should be performed in the same way as adding units to the valve base assembly. In addition, when the wiring block and piping block are mounted side-by-side, always mount the wiring block on the outside of the piping block, for structural reasons.

**Valve tightening torque** N·cm [in·lbf]

| Series | Torque |
|---|---|
| F10 | 17.6 [1.6] |
| F15 | 49.0 [4.3] |

Figure 6

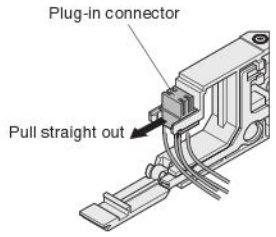


Figure 7

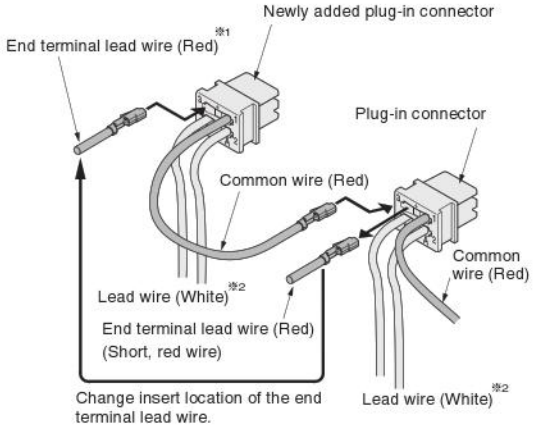


※1: Always insert end terminal lead wire.
※2: Shows when both A and B are used.

Figure 8

Note: For the serial transmission type (integrated transmission block), remove the serial transmission block.

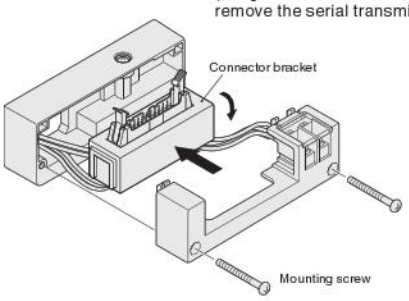


Mounting screw tightening torque: 49 N·cm [4.3 in·lbf]

See "F10, F15 Series Detailed Diagram of Wiring Block Internal Connections" on p.34, 35.

## F18 Series Disassembly Diagram of Split Manifold Plug-in Type

Figure 1

Disassembly example: For mounted flat cable connector

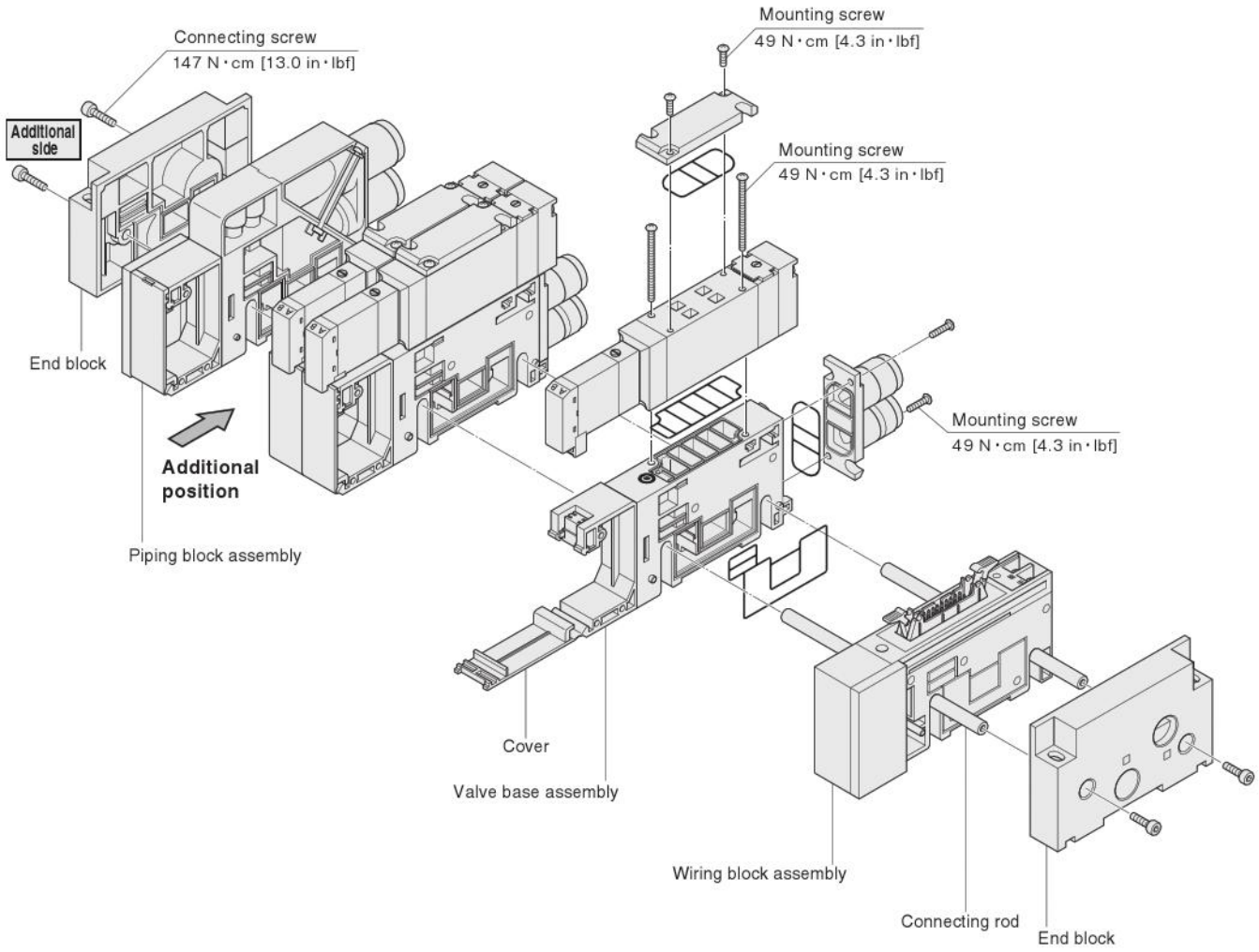


## Manifold Unit Adding Procedure (F18 Series Plug-in Type)

### ■ Adding a valve base unit

Use the valve base assembly for adding valve base units.

① Remove the connecting screws on the additional side end block and separate the end block from the manifold (see Fig. 1).

② Install the connecting rods to be added, open up spaces where the units are being added, position the gaskets onto the valve base assemblies being added, and fit the units on the connecting rods from above. At this time, securely mount the units so that no gap is left between the added valve base assemblies and the upper surface of the connecting rods.

③ Install gaskets onto the end blocks removed in step ①, and retighten the connecting screws. At this time, use a hexagon bar wrench to hold the connecting screws on the opposite side in place so as to prevent the screws from slipping while securing them into place. Tightening torque: 147 N·cm [13.0 in·lbf]

## ■ Wiring Procedure

① Use a flatblade screwdriver to open all of the covers (see Fig. 1). Loosen the mounting screws of the valve next to the valve base to be added, remove the valve, and remove the plug-in connector (see Fig. 2).

② The end terminal lead wire (short red wire) is inserted into the pin insert section (No.3) of the removed plug-in connector that was removed in step ① (see Fig. 3).
(When shipping, end terminal lead wire is inserted into the plug-in connector of the end unit valve.) Remove this end terminal lead wire, and insert it into the insert section (No.3) of the plug-in connector for the valve base assembly to be added. Next, insert the common wire (red) of this plug-in connector into the insert section (No.3) of the removed plug-in connector.

Note: When inserting the lead wire, confirm that the short bar of the plug-in connector's common wire insert section has been attached.

③ Install each of the wired plug-in connectors in step ② to the valve base, and mount the valve.

④ Remove the wiring block mounting screws and place the connector bracket in the position shown in Fig. 4, then connect the lead wire (white) of the added valve base after confirming the pin locations (For details, see the "Detailed diagram of wiring block internal connections" on p.36, 37).

⑤ Return the connector bracket to its original position, tighten the wiring block mounting screws in place, and then install the cover while exercising caution that the lead wires are not trapped by the cover.

## 【Caution】

- Always cut off the power and air supply before working. In addition, always confirm that air has been completely exhausted from the manifold.
- When removing lead wires from the plug-in connector, use a tool with a fine tip (such as a small screwdriver) to press lightly on the contact hook from a hole on the side of the plug-in connector, and pull out the lead wire. When re-inserting the lead wire to the connector, spread the contact hooks so that they face outward, and then insert the lead wire into the plug-in connector. At this time, pull the lead wire lightly to confirm that it is securely inserted.
- Always connect the end terminal lead wire (see Fig. 3).
- Care should be exercised to prevent the gasket from becoming caught or lost.
- Before supplying air to the manifold, always confirm that the bases are connected, the end block connecting screws on both sides are tightened, etc.
  Supplying air when either of the end blocks is not securing the DIN rail could result in air leaks or in separation of manifold bases.
- Caution should be exercised as the number of valve units that can be added is limited in the manifold, by the wiring specifications and wiring connection types, etc. For details, see the "Table for maximum number of valve units by wiring specification," on p.84.
- When there are a large number of valves simultaneously delivering air to the secondary side, or when there are a large number of valves overall, we recommend using 2 air supplies and exhausts (on each side).

Adding units to the piping block assembly should be performed in the same way as adding units to the valve base assembly. In addition, when the wiring block and piping block are mounted side-by-side, always mount the wiring block on the outside of the piping block, for structural reasons.

**Valve tightening torque** N·cm [in·lbf]

| Series | torque |
|---|---|
| F18 | 49.0 [4.3] |

Figure 2

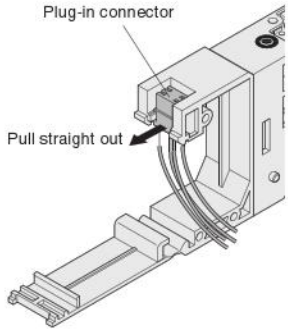


Figure 3

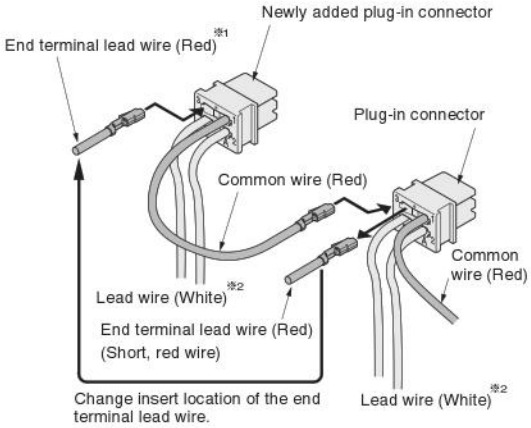


※1: Always insert end terminal lead wire.
※2: Shows when both A and B are used.

Figure 4

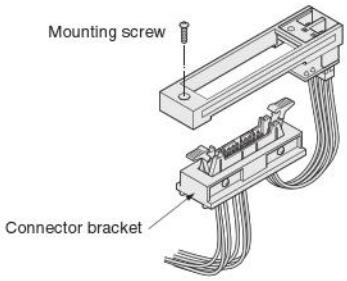


See "F18 Series Detailed Diagram of Wiring Block Internal Connections" on p.36, 37.

## F10, F15 Series Detailed Diagram of Wiring Block Internal Connections

### Flat cable connector 10, 20, 26 pins

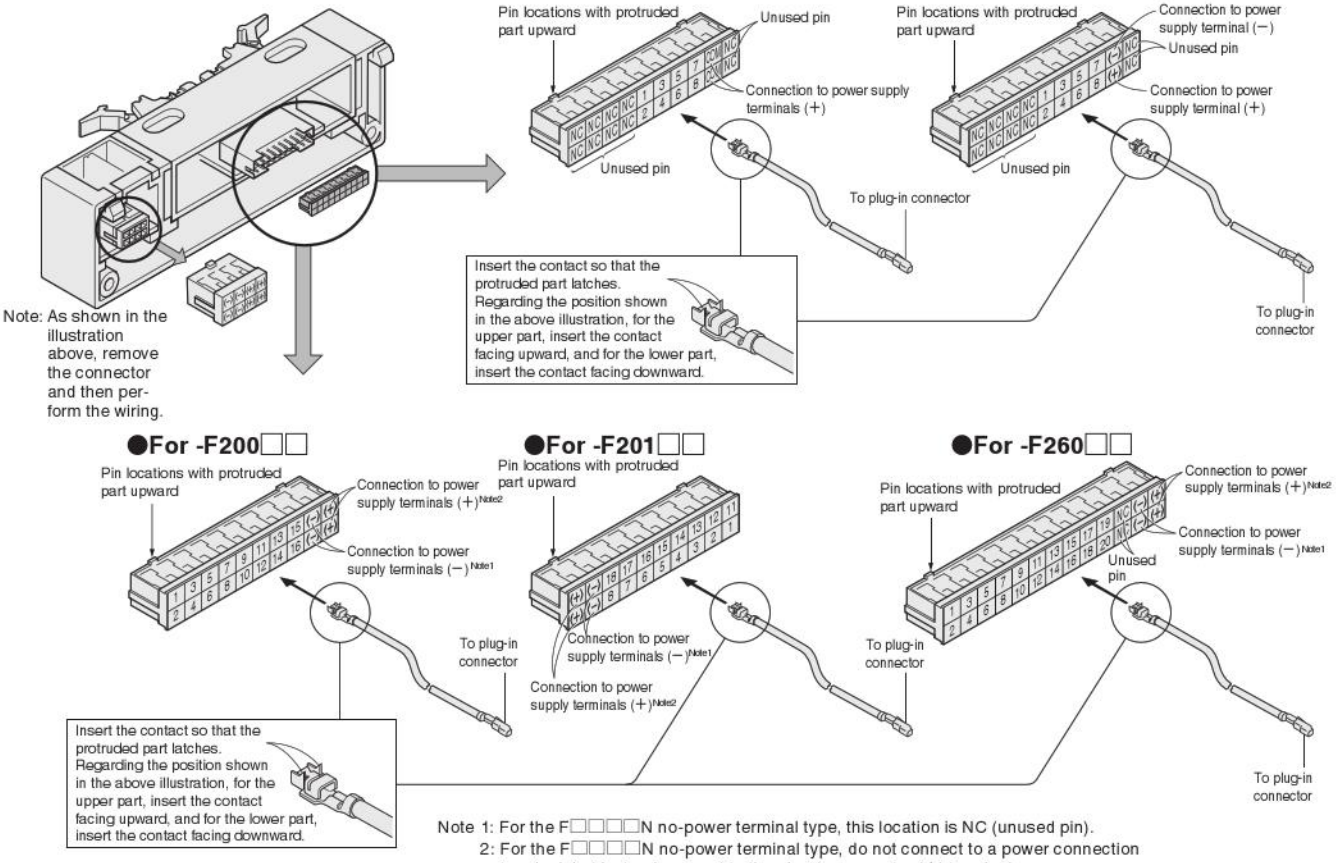


Note 1: For the F□□□□N no-power terminal type, this location is NC (unused pin).
2: For the F□□□□N no-power terminal type, do not connect to a power connection terminal, but instead connect to the plug-in connector (+) terminal.

### D-sub connector

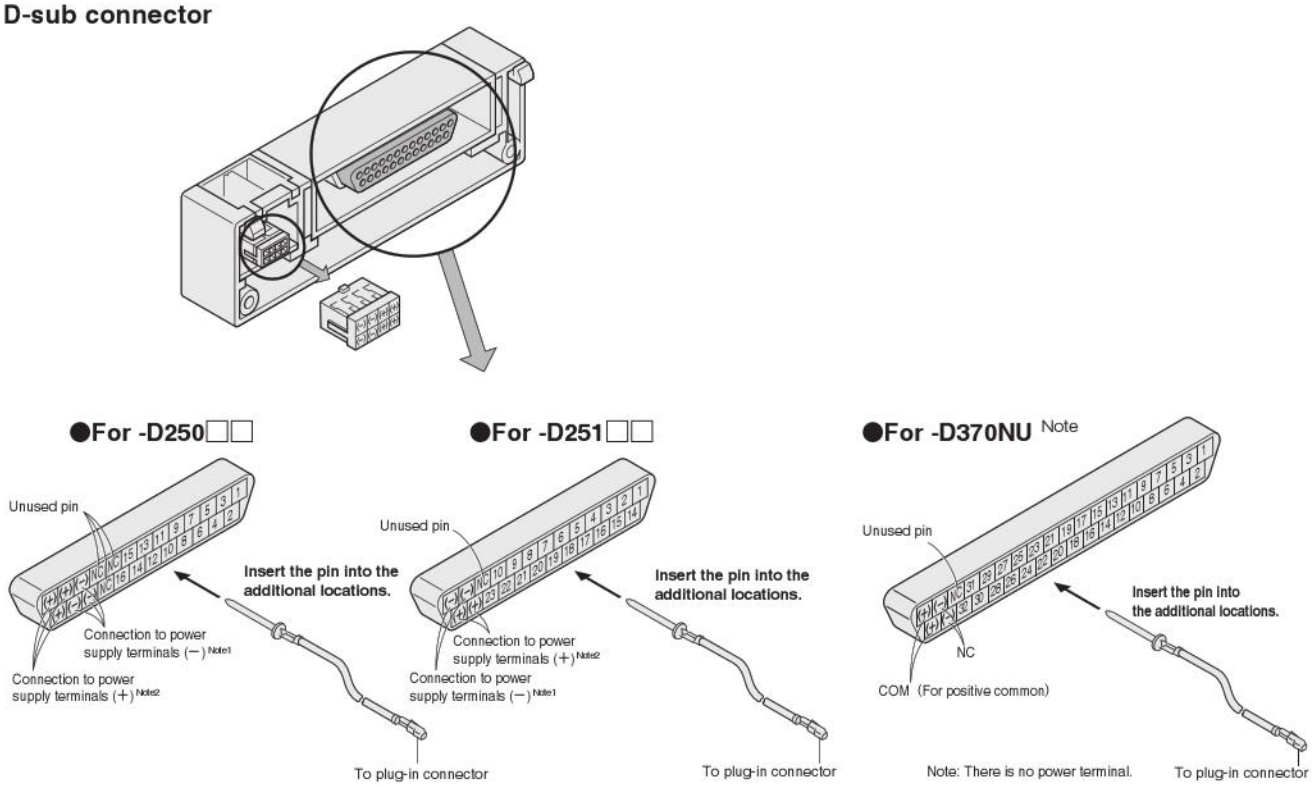


Note 1: For the D25□□N no- power terminal type, this location is NC (unused pin).
2: For the D25□□N no-power terminal type, do not connect to a power connection terminal, but instead connect to the plug-in connector (+) terminal.

## Terminal block

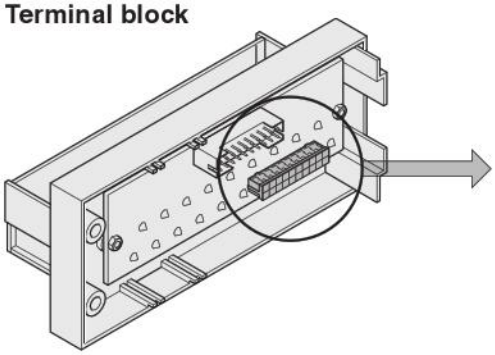

Note: As shown in the illustration above, remove the connector and then perform the wiring.

### ●For -T200

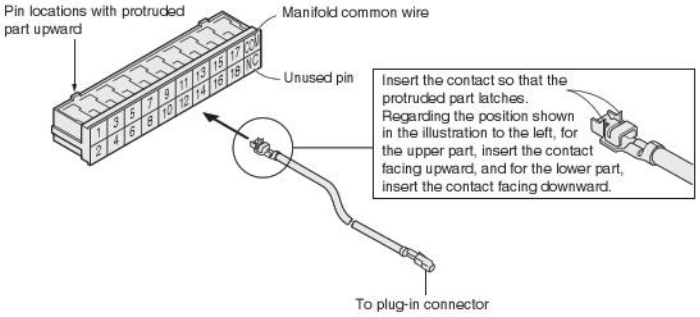


## Serial transmission block

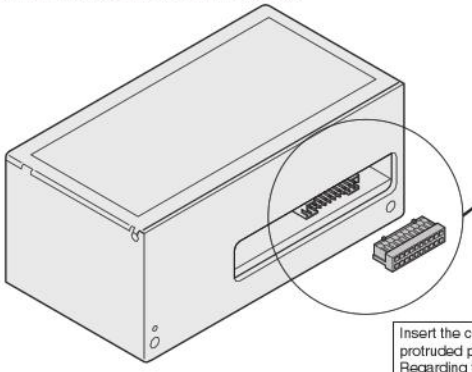

Note: As shown in the illustration above, remove the connector and then perform the wiring.

### ● For 16 outputs

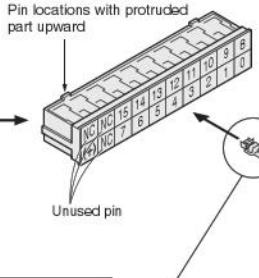


### ● For 32 outputs

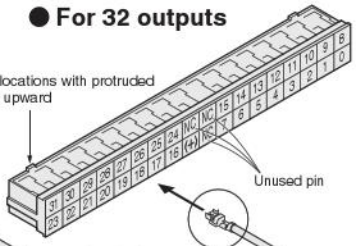


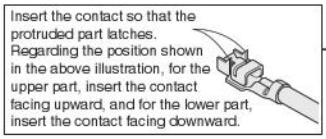


To plug-in connector

To plug-in connector

## F18 Series Detailed Diagram of Wiring Block Internal Connections

### Flat cable connector 10, 20, 26 pins

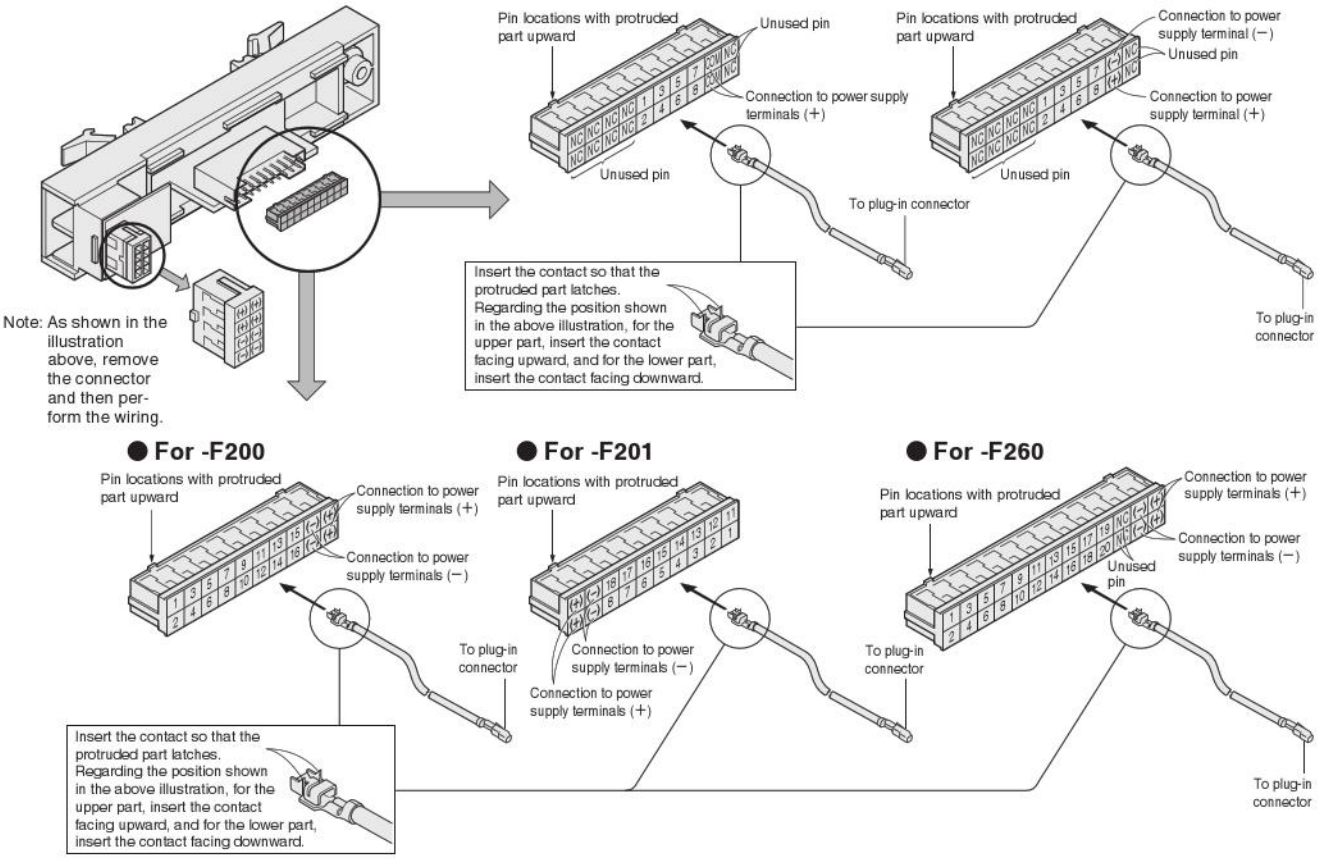


### D-sub connector

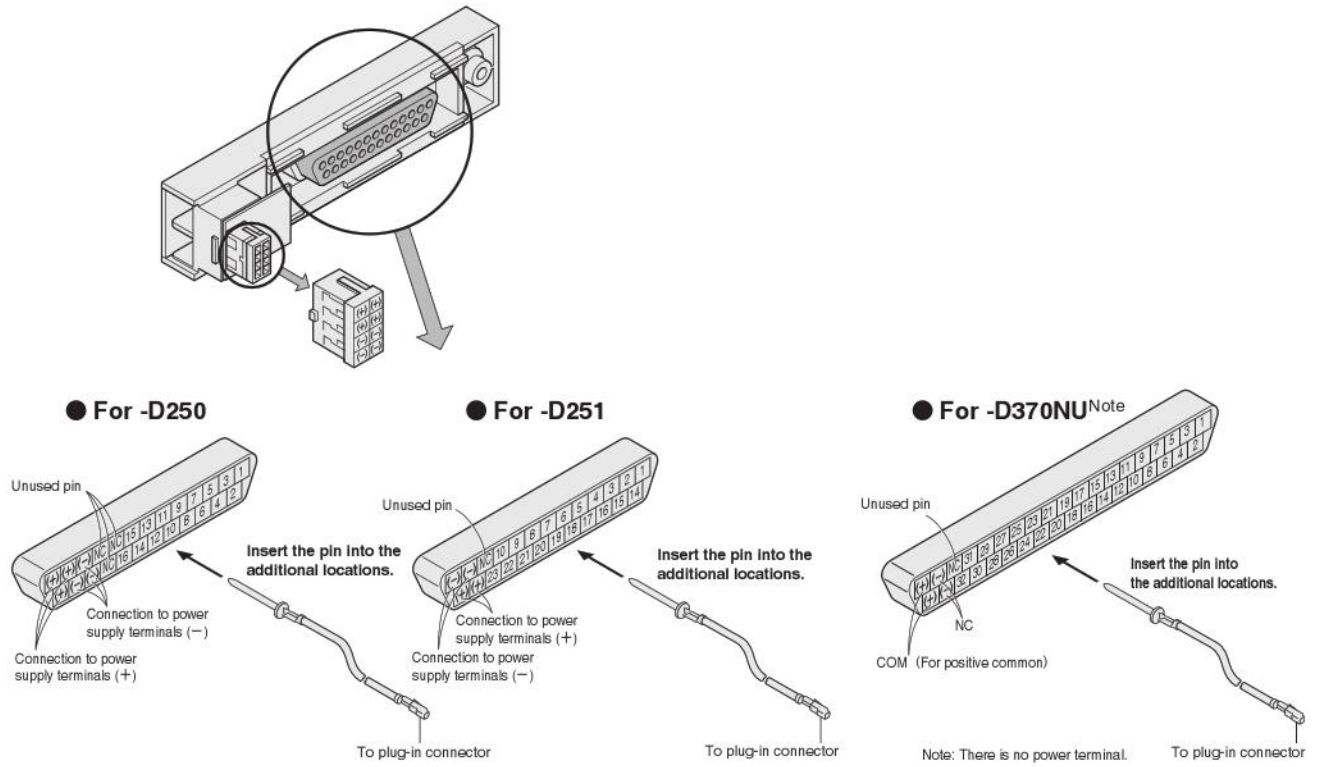

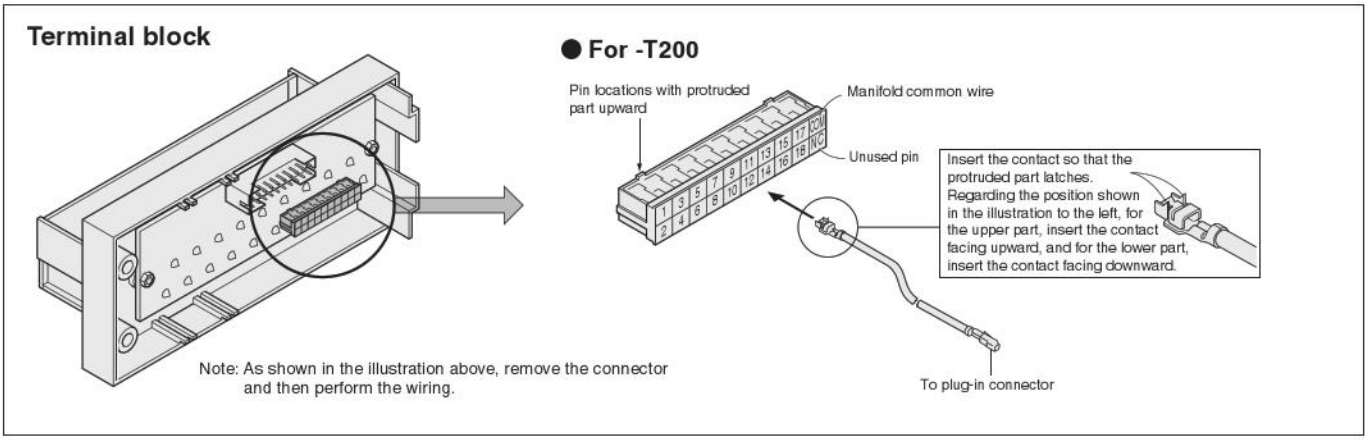


## Product Configurations for the F Series Serial Transmission Compatible Manifolds

When ordering the serial transmission compatible manifold, note that the product configurations vary between the F10 and F15 series, and the F18 series.

### ■ For F10 and F15 series

**●Models compatible with integrated transmission block**

- For Omron CompoBus/S
- For CC-Link
- For DeviceNet
- For CompoNet
- For EtherCAT

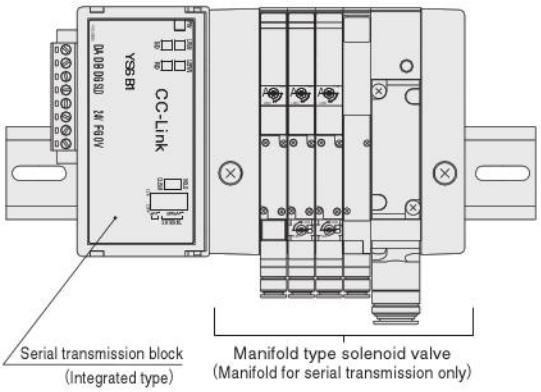


**●Models for stand-alone transmission block**

The manifold body and serial transmission block are connected with a flat cable.

- For Omron B7A Link Terminal

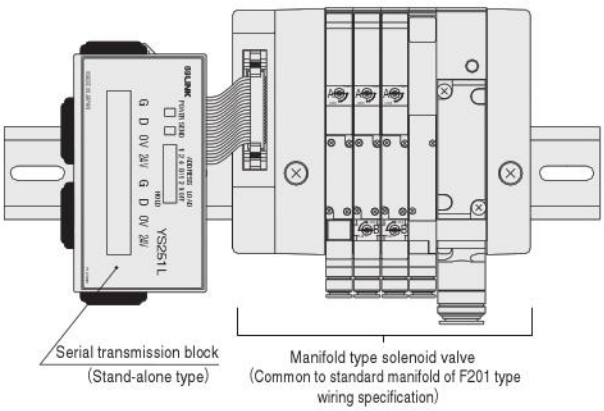


### ■ For F18 series

**●Models compatible with integrated transmission block**

- For Omron CompoBus/S
- For CompoNet
- For CC-Link

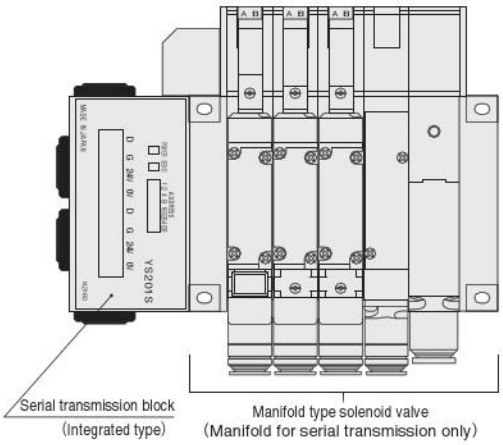


**●Models for stand-alone transmission block**

The manifold body and serial transmission block are connected with a flat cable.

- For Omron B7A Link Terminal

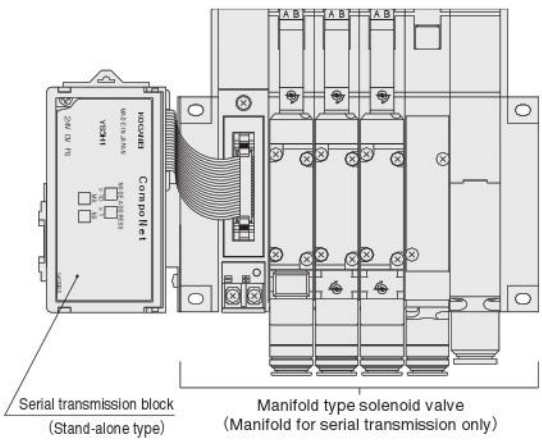

## F10, F15 Series Specifications of Serial Transmission Compatible Manifolds

### General Specifications

| | |
|---|---|
| Voltage | 24VDC ±10% |
| Operating temperature range | 5～50°C [41～122°F] |
| Vibration resistance | 49.0 m/s$^2$ [5G] |
| Shock resistance | 98.1 m/s$^2$ [10G] |

● For details about specifications, see each user's manual (see below).

## F10, F15 Series Serial Transmission Block, Terminal Block (LED) Part Names

### ● For OMRON B7A Link Terminal

**Transmission block specification: -31** (standard type), **-32** (high-speed type)

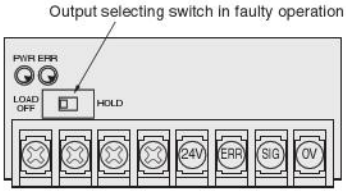


**LED indicator**

| Indicator | Description |
|---|---|
| PWR | •Lights up when power is turned on |
| ERR | •Lights up during faulty transmission |

**Remarks**

● **Connection method: 1 to 1**

| (Transmission block spec.) | Standard type (-31) | High-speed type (-32) |
|---|---|---|
| Transmission delay time | Max. 31 ms | Max. 5 ms |
| Transmission distance | Max. 500 m [1640 ft] | Max. 100 m [328 ft] |

※For details of B7A Link Terminal, see the OMRON catalog, user's manual, etc.

● **Number of outputs per block**
Maximum of 16 solenoids

● **Error output specifications**
Output type: NPN open collector
Rated load voltage: 24VDC
Output current: Sink current MAX. 40 mA

● **Related materials:** User's manual, document **No. BK-HV038**

### ● For OMRON CompoBus/S

**Transmission block specification: -A1** (16 outputs)

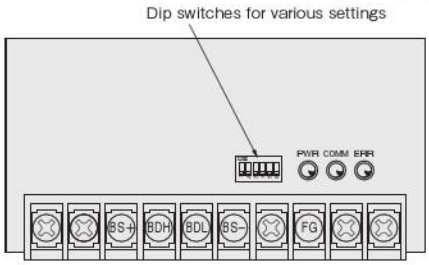


**LED indicator**

| Indicator | State | Color | Description |
|---|---|---|---|
| PWR | Lights up | Green | •During power supply |
| | Shuts off | | •Power not supplied |
| COMM | Lights up | Yellow | •During normal communication |
| | Shuts off | | •Communication fault, or standby |
| ERR | Lights up | Red | •Communication fault occurred |
| | Shuts off | | •During normal communication, or standby |

**Remarks**

※For details of CompoBus/S, see the OMRON catalog, user's manual, etc.

● **Number of outputs per block**
16 solenoids (transmission block specification: **-A1**)

● **Related materials:** User's manual, document **No.BK-HV040**

### ● For CC-Link

**Transmission block specification: -B1** (16 outputs)

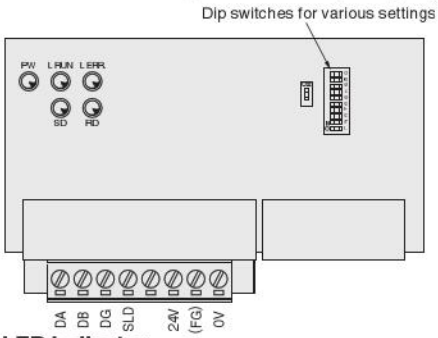


**LED indicator**

| Indicator | Description |
|---|---|
| PW | •Lights up when power is turned on |
| L RUN | •Lights up when normal data is received from master station |
| SD | •Lights up during sending data |
| RD | •Lights up during receiving data |
| L ERR. | •Lights up during transmission errors, and shuts off when time is over<br>Lights up due to station number setting error or transmission speed setting error |

**Remarks**

※Conforms to CC-Link.

● **Number of outputs per block**
16 solenoids (transmission block specification: **-B1**)

※Since the block occupies 1 station, if remote I/O stations are entirely composed of the blocks, a maximum of 64 units can be connected to 1 master station.

● **Related materials:** User's manual, document **No.BK-HV041**

### ● For CC-Link

**Transmission block specification: -B3** (32 outputs)

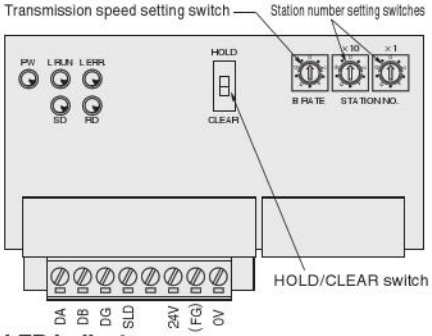


**LED indicator**

| Indicator | Description |
|---|---|
| PW | •Lights up when power is turned on |
| L RUN | •Lights up when normal data is received from master station |
| SD | •Lights up during sending data |
| RD | •Lights up during receiving data |
| L ERR. | •Lights up during transmission errors, and shuts off when time is over<br>Lights up due to station number setting error or transmission speed setting error |

**Remarks**

※Conforms to CC-Link.

● **Number of outputs per block**
32 solenoids (transmission block specification: **-B3**)

※Since the block occupies 1 station, if remote I/O stations are entirely composed of the blocks, a maximum of 64 units can be connected to 1 master station.

● **Related materials:** User's manual, document **No.BK-HV041**

### ● For DeviceNet

**Transmission block specification: -D1** (16 outputs), **-D3** (32 outputs)

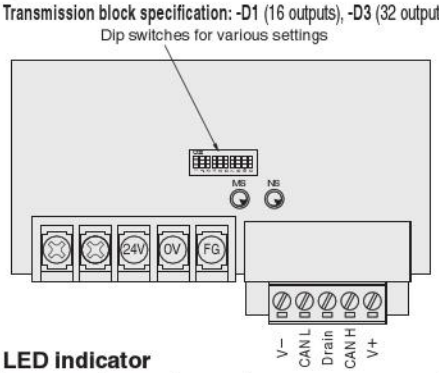


**LED indicator**

| Indicator | State | Color | Description |
|---|---|---|---|
| MS | Lights up | Green | • Normal state |
| | Flashing | | • No setting state |
| | Lights up | Red | • Serious breakdown |
| | Flashing | | • Minor breakdown |
| | Shuts off | — | • No power supply |
| NS | Lights up | Green | • Communication connection completed |
| | Flashing | | • No communication connection |
| | Lights up | Red | • Serious communication fault |
| | Flashing | | • Minor communication fault |
| | Shuts off | — | • No power supply |

**Remarks**

※Conforms to DeviceNet.

● **Number of outputs per block**
A maximum of 16 solenoids
(transmission block specification: **-D1**)
A maximum of 32 solenoids
(transmission block specification: **-D3**)

● **Related materials:** User's manual, document **No. BK-HV042**

### ● For CompoNet

**Transmission block specification: -H1** (16 outputs)

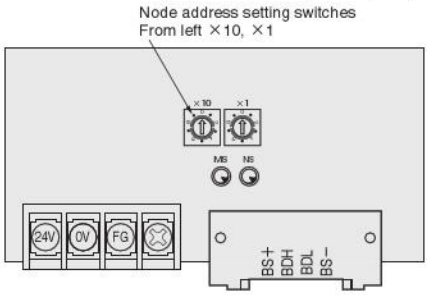


**LED indicator**

| Indicator | State | Color | Description |
|---|---|---|---|
| MS | Lights up | Green | • Normal state |
| | Lights up | Red | • Serious breakdown |
| | Flashing | Red | • Minor breakdown |
| | Shuts off | – | • Power OFF/In preparation |
| NS | Lights up | Green | • Online/Access state |
| | Flashing | Green | • Online/No-access state |
| | Lights up | Red | • Serious communication fault |
| | Flashing | Red | • Minor communication fault |
| | Shuts off | – | • Power OFF/In preparation |

**Remarks**

※Conforms to CompoNet.

● **Number of outputs per block**
16 solenoids (transmission block specification: **-H1**)

● **Related materials:** User's manual, document **No.BK-HV043**

※The communication connector is sold by Omron Corporation. Direct your inquiries to Omron.

# F10, F15 Series Serial Transmission Block, Terminal Block (LED) Part Names

## ●EtherCAT Compliant

**Transmission block specifications**: **-K1** (16 outputs), **-K3** (32 outputs)

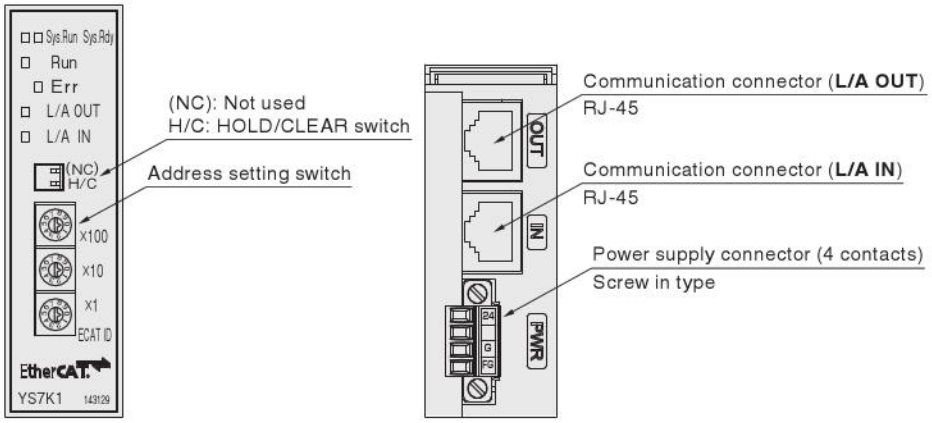


### LED indicator

| Indicator | State | Color | Description |
|---|---|---|---|
| Sys.Run/Sys.Rdy | Lit/Not lit | Green/yellow | • Transmission block operation normal |
| | Flashing/flashing | Green/yellow | • Transmission block initialization |
| | Not lit/lit or flashing | Green/yellow | • Transmission block error |
| | Not lit/Not lit | Green/yellow | • Transmission block power OFF |
| Run | Off | Green | • INIT |
| | Flashing (blinking) | Green | • PRE-OPERATIONAL |
| | Flashing (single flash) | Green | • SAFE-OPERATIONAL |
| | Lighted | Green | • OPERATIONAL |
| Err | Off | Red | • No error |
| | Flashing (blinking) | Red | • Invalid setting |
| | Flashing (single flash) | Red | • Unrequested change in status |
| | Flashing (double flash) | Red | • Communication disconnect |
| L/A OUT<br>L/A IN | Lighted | Green | • Normal communication |
| | Flashing | Green | • EtherCAT frame sending/receiving |
| | Off | Green | • Not connected |

**Remarks**

*EtherCAT compliant.

●**Number of outputs for this block**
Number of solenoids for **-K1** is 16 and for **-K3** is 32.

●**F10 and F15 series are supported**

**Remarks**

※EtherCAT® is a registered trademark for patented technology licensed from Beckhoff Automation GmbH of Germany.
●See the separate user's manual **No. BK-HV044** for details about specifications and handling.
●We recommend category 5 (100BASE-TX) or higher twisted paired cables (CAT 5e STP) for communication cables.
●You can download the ESI (EtherCAT Slave Information) file from our web site.

## ●EtherNet/IP Compliant

**Transmission block specifications**: **-M1** (16 outputs), **-M3** (32 outputs)

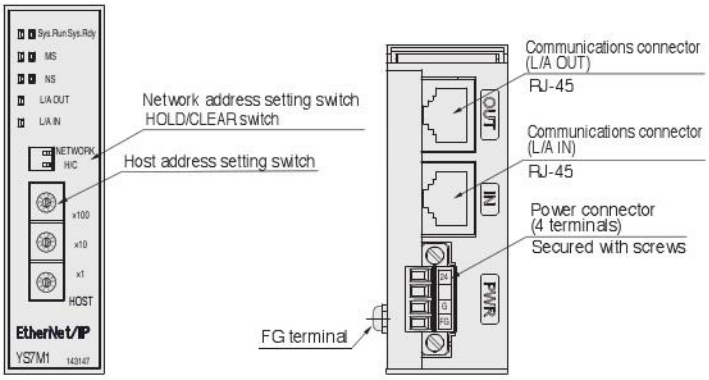


### Names of LEDs

| Indicator | LED State | Description |
|---|---|---|
| Sys.Run/Sys.Rdy | □/□ off/off | Transmission block power off |
| | ■/□ Lit green/off | Transmission block normal operation |
| MS | □ Off | Transmission block power off |
| | ◩ Flashing green | IP address setting in progress |
| | ■ Lit green | Normal operation |
| | ◩ Flashing red | Recoverable errors |
| | ■ Lit red | Unrecoverable error |
| NS | □ Off | Transmission block power off |
| | ◩ Flashing green | Transmission block is online without an established connection |
| | ■ Lit green | Transmission block is online and has established connections |
| | ◩ Flashing red | Connection timeout |
| | ■ Lit red | Transmission block detected a duplicate IP address |
| L/A | □ Off | Not connected |
| | ■ Lit green | Normal communication |

EtherNet/IP™ is a trademark of ODVA.

**Remarks**

*EtherNet/IP compliant.

●**Number of outputs for this block**
Number of solenoids for **-M1** is 16 and for **-M3** is 32.

●**F10 and F15 series are supported**

●See the separate user's manual **No. BK-HV045** for details about specifications and handling.
●We recommend (CAT 5e STP) shielded twisted pair cables that are at least category 5 (100BASE-TX) for communication cables.
●The EDS (electronic data sheet) files can be downloaded from our homepage.

■For specifications and handling details, see the above-listed user's manuals (Document **No. BK-HV038, BK-HV040 - BK-HV045**).

## F18 Series Specifications of Serial Transmission Compatible Manifolds

### General Specifications

| | |
|---|---|
| Voltage | 24VDC ±10% |
| Operating temperature range | 5~50°C [41~122°F] |
| Vibration resistance | 49.0 m/s² [5G] |
| Shock resistance | 98.1 m/s² [10G] |

● For details about specifications, see each user's manual (see below).

## F18 Series Serial Transmission Block, Terminal Block (LED) Part Names

### ● For OMRON B7A Link Terminal

**Transmission block specification: -31** (standard type), **-32** (high-speed type)

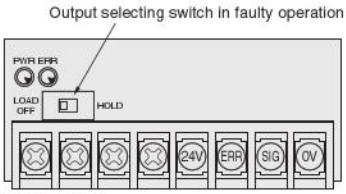


#### LED indicator

| Indicator | Description |
|---|---|
| PWR | •Lights up when power is turned on |
| ERR | •Lights up during faulty transmission |

**Remarks**

● **Connection method: 1 to 1**

| (Transmission block spec.) | Standard type (**-31**) | High-speed type (**-32**) |
|---|---|---|
| Transmission delay time | Max. 31 ms | Max. 5 ms |
| Transmission distance | Max. 500 m [1640 ft.] | Max. 100 m [328 ft.] |

※For details of B7A Link Terminal, see the OMRON catalog, user's manual, etc.

● **Number of outputs per block**
Maximum of 16 solenoids

● **Error output specifications**
Output type: NPN open collector
Rated load voltage: 24VDC
Output current: Sink current MAX. 40 mA

● **Related materials:** User's manual, document **No. BK-HV038**

### ● For CompoNet

**Transmission block specification: -H1** (16 outputs)

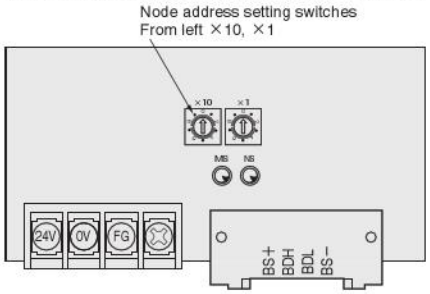


#### LED indicator

| Indicator | State | Color | Description |
|---|---|---|---|
| MS | Lights up | Green | • Normal state |
| | Lights up | Red | • Serious breakdown |
| | Flashing | Red | • Minor breakdown |
| | Shuts off | – | • Power OFF/In preparation |
| NS | Lights up | Green | • Online/Access state |
| | Flashing | Green | • Online/No-access state |
| | Lights up | Red | • Serious communication fault |
| | Flashing | Red | • Minor communication fault |
| | Shuts off | – | • Power OFF/In preparation |

**Remarks**

※Conforms to CompoNet.

●**Number of outputs per block**
16 solenoids (transmission block specification: **-H1**)

●**Related materials:** User's manual, document **No.BK-HV043**

※The communication connector is sold by Omron Corporation. Direct your inquiries to Omron.

### ● For OMRON CompoBus/S

**Transmission block specification: -A1** (16 outputs)

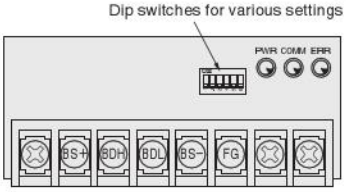


#### LED indicator

| Indicator | State | Color | Description |
|---|---|---|---|
| PWR | Lights up | Green | •During power supply |
| | Shuts off | | •Power not supplied |
| COMM | Lights up | Yellow | •During normal communication |
| | Shuts off | | •Communication fault, or standby |
| ERR | Lights up | Red | •Communication fault occurred |
| | Shuts off | | •During normal communication, or standby |

**Remarks**

※For details of CompoBus/S, see the OMRON catalog, user's manual, etc.

● **Number of outputs per block**
16 solenoids (transmission block specification: **-A1**)

● **Related materials:** User's manual, document **No.BK-HV040**

### ● For CC-Link

**Transmission block specification: -B1** (16 outputs)

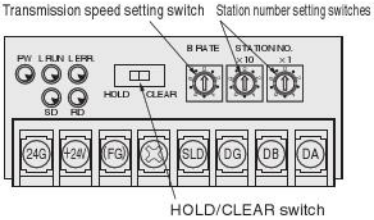


#### LED indicator

| Indicator | Description |
|---|---|
| PW | •Lights up when power is turned on |
| L RUN | •Lights up when normal data is received from master station |
| SD | •Lights up during sending data |
| RD | •Lights up during receiving data |
| L ERR. | •Lights up during transmission errors, and shuts off when time is over<br>Lights up due to station number setting error or transmission speed setting error |

**Remarks**

※Conforms to CC-Link.

● **Number of outputs per block**
16 solenoids (transmission block specification: **-B1**)

※Since the block occupies 1 station, if remote I/O stations are entirely composed of the blocks, a maximum of 64 units can be connected to 1 master station.

● **Related materials:** User's manual, document **No.BK-HV041**

■For specifications and handling details, see the above-listed user's manuals (Document **No. BK-HV038, BK-HV040, BK-HV041, BK-HV043**).

# F Series Order Codes

The solenoid valves F series order codes are classified into the following 10 categories. For details on order codes, see the designated pages.

| | F10 Series F15 Series | F18 Series |
|---|---|---|
| **T:** Single valve unit | p. 44 | p. 72 |
| **M□A□:** Monoblock manifold **A** type (base piping type) | p. 46 | p. 74 |
| **M□F□:** Monoblock manifold **F** type (direct piping type) | p. 48 | p. 76 |
| **M□A□:** Monoblock manifold **A** type, wire-saving type (base piping type) | p. 50 | |
| **M□F□:** Monoblock manifold **F** type, wire-saving type (direct piping type) 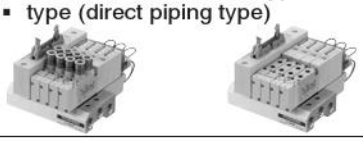 | p. 52 | |
| **M□AP:** PC board manifold **A** type (base piping type) | p. 54 | |
| **M□FP:** PC board manifold **F** type (direct piping type) | p. 58 | |
| **M□N□:** Split manifold non-plug-in type 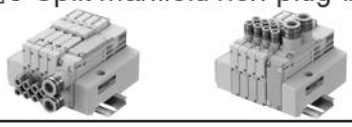 | p. 60 | p. 78 |
| **M□P□:** Split manifold plug-in type | p. 64 | p. 82 |
| **M□S□:** Serial transmission compatible manifold | p. 68 | p. 86 |

# F10, F15 Series Single Valve Unit Order Codes

## Valve size

**F10**
10 mm [0.394 in.] width
Standard type

**F10L**
10 mm [0.394 in.] width
Low-current type

**F15**
15 mm [0.591 in.] width
Standard type

**F15L**
15 mm [0.591 in.] width
Low-current type

## Valve outlet type

Without inlet/outlet block

With A type outlet plate

With A type sub-base

**-A2 inlet/outlet port**
**F10:** Rc1/8
**F15:** Rc1/8

**-A2H inlet/outlet port**
**F10:** NPT1/8
**F15:** NPT1/8

With outlet port dual use fitting block

**Outlet port fitting**
**F10:** $\phi$4, $\phi$6
**F15:** $\phi$6, $\phi$8

With outlet port single use fitting block

**Outlet port fitting**
**F10:** $\phi$4
**F15:** $\phi$6

With outlet port single use fitting block

**Outlet port fitting**
**F10:** $\phi$6
**F15:** $\phi$8

With outlet port female thread block

**-FM outlet port**
**F10:** M5 × 0.8
**F15:** Rc1/8

**-FMH outlet port**
**F10:** 10-32UNF
**F15:** NPT1/8

With outlet port dual use fitting block
With inlet port female thread block Note6

**Outlet port fitting**
**F10:** $\phi$4, $\phi$6
**F15:** $\phi$6, $\phi$8

With outlet port female thread block
With inlet port female thread block

**-F4 inlet/outlet port**
**F10:** M5 × 0.8
**F15:** Rc1/8

**-F4H inlet/outlet port**
**F10:** 10-32UNF
**F15:** NPT1/8

With outlet port single use fitting block
With inlet port female thread block Note6

**Outlet port fitting**
**F10:** $\phi$4
**F15:** $\phi$6

With outlet port single use fitting block
With inlet port female thread block Note6

**Outlet port fitting**
**F10:** $\phi$6
**F15:** $\phi$8

**3-port normally closed (NC)** Note5
With outlet port single use fitting block

**Outlet port fitting**
**F10:** $\phi$4
**F15:** $\phi$6

**3-port normally open (NO)** Note5
With outlet port single use fitting block

**Outlet port fitting**
**F10:** $\phi$4
**F15:** $\phi$6

**3-port normally closed (NC)** Note5
With outlet port single use fitting block

**Outlet port fitting**
**F10:** $\phi$6
**F15:** $\phi$8

**3-port normally open (NO)** Note5
With outlet port single use fitting block

**Outlet port fitting**
**F10:** $\phi$6
**F15:** $\phi$8

**3-port normally closed (NC)** Note5
With outlet port female thread block

**-FMA outlet port**
**F10:** M5 × 0.8
**F15:** Rc1/8

**-FMAH outlet port**
**F10:** 10-32UNF
**F15:** NPT1/8

**3-port normally open (NO)** Note5
With outlet port female thread block

**-FMB outlet port**
**F10:** M5 × 0.8
**F15:** Rc1/8

**-FMBH outlet port**
**F10:** 10-32UNF
**F15:** NPT1/8

**3-port normally closed (NC)** Note5
With outlet port female thread block
With inlet port female thread block

**-F4A inlet/outlet port**
**F10:** M5 × 0.8
**F15:** Rc1/8

**-F4AH inlet/outlet port**
**F10:** 10-32UNF
**F15:** NPT1/8

**3-port normally open (NO)** Note5
With outlet port female thread block
With inlet port female thread block

**-F4B inlet/outlet port**
**F10:** M5 × 0.8
**F15:** Rc1/8

**-F4BH inlet/outlet port**
**F10:** 10-32UNF
**F15:** NPT1/8

**3-port normally closed (NC)** Note5
With outlet port single use fitting block
With inlet port female thread block Note6

**Outlet port fitting**
**F10:** $\phi$4
**F15:** $\phi$6

**3-port normally open (NO)** Note5
With outlet port single use fitting block
With inlet port female thread block Note6

**Outlet port fitting**
**F10:** $\phi$4
**F15:** $\phi$6

**3-port normally closed (NC)** Note5
With outlet port single use fitting block
With inlet port female thread block Note6

**Outlet port fitting**
**F10:** $\phi$6
**F15:** $\phi$8

**3-port normally open (NO)** Note5
With outlet port single use fitting block
With inlet port female thread block Note6

**Outlet port fitting**
**F10:** $\phi$6
**F15:** $\phi$8

## Wiring specification

L type plug connector
Without connector

S type plug connector
Without connector

S type plug connector
Lead wire 300 mm [11.8 in.]

L type plug connector
Lead wire 300 mm [11.8 in.]

S type plug connector
Lead wire 3000 mm [118 in.]

L type plug connector
Lead wire 3000 mm [118 in.]

DIN connector type with indicator Note10

DIN connector type without connector Note10

**-39N**

## Valve specification

**T0 :** 2-position, for single solenoid only
**T1 :** 2-position single solenoid specification (for both single and double solenoid use)
**T2 :** 2-position double solenoid specification (for both single and double solenoid use)
**T3 :** 3-position closed center
**T4 :** 3-position exhaust center Note3
**T5 :** 3-position pressure center Note3
**TA :** Tandem 3-port (NC and NC) Note4
**TB :** Tandem 3-port (NO and NO) Note4
**TC :** Tandem 3-port (NC and NO) Note4

## Operation type

**Blank**
Internal pilot type

**G**
External pilot type Note
(for positive pressure)

**V**
External pilot type Note
(for vacuum) ※
※ This is a vacuum valve.

Note: When using as a single unit, select **-A2** (A type with sub-base) for the valve outlet type. Without a sub-base, piping for the external pilot is not possible.

## Manual override

Manual override button

No protrusion with DIN connector

Manual override lever Note1

Protruding locking type Note9

| Valve size | Valve specification | Operation type | IP specification | Manual override | Valve outlet type | UL standard compliant | Wiring specification | Voltage |
|---|---|---|---|---|---|---|---|---|
| F10<br>F10L<br>F15<br>F15L | T0<br>T1<br>T2<br>T3<br>T4 Note3<br>T5 Note3<br>TA Note4<br>TB Note4<br>TC Note4 | Blank<br>G<br>V | Blank<br>-P Note12 Note13 | Blank<br>-R Note1<br>-83 Note9 Note12 | Blank Note2<br>-A1 Note2<br>-A2 Note12<br>-A2H Note12<br>-FJ Note2,3<br>-FJ5 Note2,3<br>-FJ6 Note2,3<br>-FM Note2,3<br>-FMH Note2,3 Note12<br>-F3 Note4 Note12<br>-F4 Note4 Note12<br>-F4H Note4 Note12<br>-F5 Note4 Note12<br>-F6 Note4 Note12<br>-FJ5A Note2,3<br>-FJ5B Note2,3<br>-FJ6A Note2,3<br>-FJ6B Note2,3<br>-FMA Note2,3<br>-FMAH Note2,3 Note12<br>-FMB Note2,3<br>-FMBH Note2,3 Note12<br>-F4A Note4 Note12<br>-F4AH Note4 Note12<br>-F4B Note4 Note12<br>-F4BH Note4 Note12<br>-F5A Note4 Note12<br>-F5B Note4 Note12<br>-F6A Note4 Note12<br>-F6B Note4 Note12 | Blank: –<br>-UR: UL standard compliant | Blank<br>-PN<br>-PS<br>-PL<br>-PS3<br>-PL3<br>-39L Note10 Note12<br>-39N Note10 Note12 | DC24V<br>DC12V Note7<br>AC100V Note8,11 Note12<br>AC120V Note8 Note12<br>AC240V Note8,9 Note12 |

Notes: 1. When the valve specification is **T1** or **T2**, the manual override lever is placed only on the A side. This is not available with **-39**□.
2. Two manifold mounting screws are included.
3. Not available in the vacuum valves.
4. Not available in external pilot type and vacuum valves.
5. Only for valve specification **T0**, **T1**, and **T2**.
6. Thread size for the inlet port female thread block is **F10**: M5 × 0.8, **F15**: Rc1/8.
7. Not available in low-current type.
8. Not available in low-current type and tandem 3-port valves.
9. Only for wiring specification **-39**□.
10. Only for **F15** series and not available for valve specification **T1**, **TA**, **TB**, and **TC**. In addition, the valve is used only as a double solenoid for **T2**.
11. Not available with DIN connectors.
12. Not available in UR.
13. IP65 compliant protective construction to protect against intrusion of dust and water from outside.

Remark: Negative common specifications are also available as made to order products (add **-129W** to the end of order code). For details, consult us.

## ● For internal pilot

**F □ Z - □**

**Valve size**
**10:** 10 mm [0.394 in.] width
**15:** 15 mm [0.591 in.] width

**Parts content**
**21** : Mounting bracket (mounting bracket, 2 mounting screws)
**25** : Sub-base Rc1/8 (sub-base body, gasket, exhaust valve)Note1
**25H** : Sub-base NPT1/8 (sub-base body, gasket, exhaust valve)Note1
**P** : Plate (plate, gasket, 2 mounting screws)
**J** : Dual use fitting block (fitting block, gasket, 2 mounting screws)
**J5** : Single use fitting block **F10**: $\phi$4, **F15**: $\phi$6 (fitting block, gasket, 2 mounting screws)
**J6** : Single use fitting block **F10**: $\phi$6, **F15**: $\phi$8 (fitting block, gasket, 2 mounting screws)
**J5A** : Single use fitting block for 3-port **F10**: $\phi$4, **F15**: $\phi$6 (fitting block, gasket, 2 mounting screws)Note3
**J6A** : Single use fitting block for 3-port **F10**: $\phi$6, **F15**: $\phi$8 (fitting block, gasket, 2 mounting screws)Note3
**M** : Female thread block **F10**: M5 × 0.8 **F15**: Rc1/8 (female thread block, gasket, 2 mounting screws)
**MH** : Female thread block **F10**: 10-32UNF **F15**: NPT1/8 (female thread block, gasket, 2 mounting screws)
**MA** : Female thread block for 3-port **F10**: M5 × 8 **F15**: Rc1/8 (female thread block, gasket, 2 mounting screws)Note3
**MAH** : Female thread block for 3-port **F10**: 10-32UNF **F15**: NPT1/8 (female thread block, gasket, 2 mounting screws)Note3
**MP** : P port female thread block **F10**: M5 × 0.8 **F15**: Rc1/8 (P port female thread block, gasket)Note1
**MPH** : P port female thread block **F10**: 10-32UNF **F15**: NPT1/8 (P port female thread block, gasket)Note1
**GS1** : Gasket (gasket, exhaust valve)Note2

Notes: 1. Valve mounting screws are not included.
2. Caution should be exercised as this gasket is different from the **GS2** gasket for the split-type manifolds.
3. Common to both normally closed (NC) and normally open (NO) types. Select the mounting direction by application requirements.

## ● For external pilot

**F □ Z - □**

**Valve size**
**10:** 10 mm [0.394 in.] width
**15:** 15 mm [0.591 in.] width

**Parts content**
**P** : Plate (plate, gasket, 2 mounting screws)
**J** : Dual use fitting block (fitting block, gasket, 2 mounting screws)
**J5** : Single use fitting block **F10**: $\phi$4, **F15**: $\phi$6 (fitting block, gasket, 2 mounting screws)
**J6** : Single use fitting block **F10**: $\phi$6, **F15**: $\phi$8 (fitting block, gasket, 2 mounting screws)
**J5A** : Single use fitting block for 3-port **F10**: $\phi$4, **F15**: $\phi$6 (fitting block, gasket, 2 mounting screws)Note1
**J6A** : Single use fitting block for 3-port **F10**: $\phi$6, **F15**: $\phi$8 (fitting block, gasket, 2 mounting screws)Note1
**M** : Female thread block **F10**: M5 × 0.8 **F15**: Rc1/8 (female thread block, gasket, 2 mounting screws)
**MH** : Female thread block **F10**: 10-32UNF **F15**: NPT1/8 (female thread block, gasket, 2 mounting screws)
**MA** : Female thread block for 3-port **F10**: M5 × 0.8 **F15**: Rc1/8 (female thread block, gasket, 2 mounting screws)Note1
**MAH** : Female thread block for 3-port **F10**: 10-32UNF **F15**: NPT1/8 (female thread block, gasket, 2 mounting screws)Note1
**GS1** : Gasket (gasket, exhaust valve)Note2

Notes: 1. Common to both normally closed (NC) and normally open (NO) types. Select the mounting direction by application requirements.
2. Caution should be exercised as this gasket is different from the **GS2** gasket for the split type manifolds.

## Sub-base for external pilot

**F □ ZG - 25**

**Valve size**
**10:** 10 mm [0.394 in.] width
**15:** 15 mm [0.591 in.] width
Sub-base Rc1/8

**F □ ZG - 25H**

**Valve size**
**10:** 10 mm [0.394 in.] width
**15:** 15 mm [0.591 in.] width
Sub-base NPT1/8

## Connector-related order codes

**JAZ - □ - □**

**UL standard compliant** Note1
**Blank**: –
**UR** :UL standard compliant

**Valve specification**
For **T1, T2, T3, T4, T5, TA, TB, TC**

**Connector specification**
**CP** : Connector, lead wire length 300 mm [11.8 in.] (black, red, white, for total of 3 lead wires)
**CP3** : Connector, lead wire length 3000 mm [118 in.] (black, red, white, for total of 3 lead wires)
**CPN** : Connector without lead wire (1 short bar and 3 contacts included)

Remarks: A connector for negative common is also available. See p. 19 for details.(Not, available in UR.)
Note:1. For the lead wire gauge, blank is 24AWG and UR is 22AWG.

**JAZ0 - □ - □**

**UL standard compliant** Note1
**Blank**: –
**UR** :UL standard compliant

**Valve specification**
For **T0**

**Connector specification**
**CP** : Connector, lead wire length 300 mm [11.8 in.] (black, red, for total of 2 lead wires)
**CP3** : Connector, lead wire length 3000 mm [118 in.] (black, red, for total of 2 lead wires)
**CPN** : Connector without lead wire (1 short bar, 2 contacts included)

**FZ - □**

**Valve specification**
For **T1, T2, T3, T4, T5, TA, TB, TC**

**Connector specification**
**CC1.5** : Cabtyre cable length 1500 mm [59 in.] ※
**CC3** : Cabtyre cable length 3000 mm [118 in.] ※

※ For details, see p. 19.

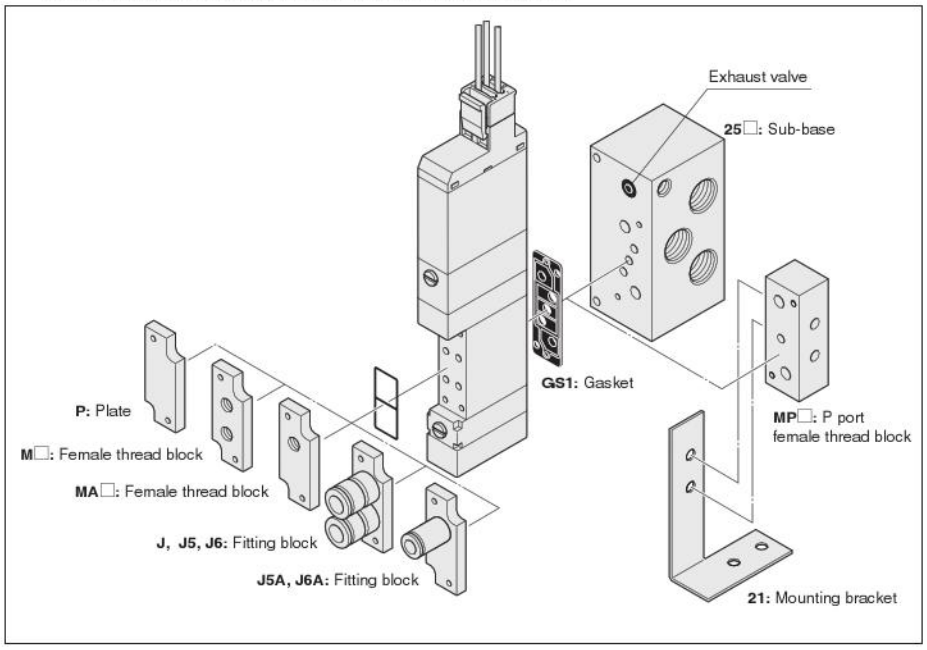


ORDER CODES

# F10, F15 Series Monoblock Manifold A Type (Base Piping Type) Order Codes

## Valve size

**F10M** 10 mm [0.394 in.] width

**F15M** 15 mm [0.591 in.] width

## Manifold outlet specification

With dual use fitting blocks (base piping type)

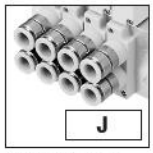


**Outlet port fitting**
**F10:** $\phi$4, $\phi$6
**F15:** $\phi$6, $\phi$8

With selectable fittings (base piping type)

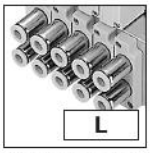


**Outlet port should be selected in accordance with the manifold fitting specification.**

With female thread blocks (base piping type)

**Outlet port female thread**
**F10:** M5 × 0.8
**F15:** Rc1/8

## Valve specification

**T0 :** 2-position, for single solenoid only
**T1 :** 2-position, single solenoid specification
**T2 :** 2-position, double solenoid specification
**T3 :** 3-position, closed center
**T4 :** 3-position, exhaust center Note6
**T5 :** 3-position, pressure center Note6
**TA:** Tandem 3-port (NC and NC) Note7
**TB:** Tandem 3-port (NO and NO) Note7
**TC:** Tandem 3-port (NC and NO) Note7

## Valve size

**F10** Standard type

**F10L** Low-current type

**F15** Standard type

**F15L** Low-current type

Note: Valves of **F10**□ and **F15**□ cannot be mounted together.

## Pilot specification

**Blank** Internal pilot manifold

**G** External pilot manifold

## Operation type

**Blank**
Internal pilot type Note4

**G**
External pilot type Note5 (for positive pressure)

**V**
External pilot type Note5 (for vacuum) ※
※ : This is a vacuum valve.

Note: Cannot be mounted together with a positive pressure valve.

## Manual override

Manual override button

No protrusion with DIN connector

Manual override lever Note2

Protruding locking type

## Valve outlet type

With plate Note3 (base piping type)

## Wiring specification

L type plug connector Without connector

S type plug connector Without connector

S type plug connector Lead wire 300 mm [11.8 in.]

L type plug connector Lead wire 300 mm [11.8 in.]

S type plug connector Lead wire 3000 mm [118 in.]

L type plug connector Lead wire 3000 mm [118 in.]

Pre-wired positive common terminal S type plug connector Lead wire 300 mm [11.8 in.]

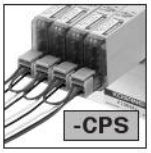


Pre-wired positive common terminal L type plug connector Lead wire 300 mm [11.8 in.]

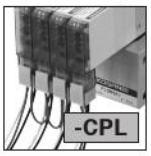


Pre-wired positive common terminal S type plug connector Lead wire 3000 mm [118 in.]

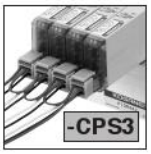


Pre-wired positive common terminal L type plug connector Lead wire 3000 mm [118 in.]

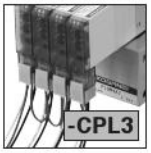


DIN connector type with indicator Note12

DIN connector type without connector Note12

**-39N**

## Individual air supply and exhaust spacer, stop valve

**Blank :** No spacer and no stop valve
**-NPM :** Individual air supply spacer (with M5 female thread for F10) Note15
**-NP6 :** Individual air supply spacer (with $\phi$6 fitting for F15) Note15
**-NP8 :** Individual air supply spacer (with $\phi$8 fitting for F15) Note15
**-NRM :** Individual exhaust spacer (with M5 female thread for F10) Note15
**-NR6 :** Individual exhaust spacer (with $\phi$6 fitting for F15) Note15
**-NR8 :** Individual exhaust spacer (with $\phi$8 fitting for F15) Note15
**-STP :** With stop valve Note4
For details, see p. 23, 25.

## Manifold fitting specification

### 5-port specification

**-J5** With single use fitting block Note13 (base piping type) **F10:** $\phi$4 **F15:** $\phi$6

**-J6** With single use fitting block Note13 (base piping type) **F10:** $\phi$6 **F15:** $\phi$8

**-M** With female thread block Note13 (base piping type) **F10:** M5 × 0.8 **F15:** Rc1/8

**-MH** With female thread block Note14 (base piping type) **F10:** 10-32UNF **F15:** NPT1/8

### 3-port specification

**-J5A** With single use fitting block, normally closed (NC) Note13 (base piping type) **F10:** $\phi$4 **F15:** $\phi$6

**-J5B** With single use fitting block, normally open (NO) Note13 (base piping type) **F10:** $\phi$4 **F15:** $\phi$6

**-J6A** With single use fitting block, normally closed (NC) Note13 (base piping type) **F10:** $\phi$6 **F15:** $\phi$8

**-J6B** With single use fitting block, normally open (NO) Note13 (base piping type) **F10:** $\phi$6 **F15:** $\phi$8

**-MA** With female thread block, normally closed (NC) Note13 (base piping type) **F10:** M5 × 0.8 **F15:** Rc1/8

**-MAH** With female thread block, normally closed (NC) Note14 (base piping type) **F10:** 10-32UNF **F15:** NPT1/8

**-MB** With female thread block, normally open (NO) Note13 (base piping type) **F10:** M5 × 0.8 **F15:** Rc1/8

**-MBH** With female thread block, normally open (NO) Note14 (base piping type) **F10:** 10-32UNF **F15:** NPT1/8

**Caution:** The 3-port specifications are only available in the valve specification **T0**, **T1**, and **T2**.

## Back pressure prevention valve

**Blank** No back pressure prevention valve

**-E1** With back pressure prevention valve Note8

| Valve size | Valve units | Manifold type | Manifold outlet specification | Pilot specification | Station | Valve size | Valve specification | Operation type | IP specification | Manual override | Valve outlet type | Wiring specification | Manifold fitting specification | Back pressure prevention valve | Individual air supply and exhaust spacer, stop valve | Voltage |
|---|---|---|---|---|---|---|---|---|---|---|---|---|---|---|---|---|
| Manifold model | | | | | | Mounting valve model | | | | | | | | | | |
| F10M<br>F15M | 2<br>⋮<br>20 | A | J<br>M | Blank<br>G | stn. 1<br>⋮<br>stn.□ Note1 | F10<br>F10L<br>F15<br>F15L | T0 TA Note7<br>T1 TB Note7<br>T2 TC Note7<br>T3<br>T4 Note6<br>T5 Note6 | Blank Note4<br>G Note5<br>V Note5 | Blank<br>-P Note16 | Blank<br>-R Note2 | -A1<br>Note3 | Blank<br>-PN -CPS<br>-PS -CPL<br>-PL -CPS3<br>-PS3 -CPL3<br>-PL3 | Blank<br>-E1 Note8 | Blank<br>-NPM Note15 -NRM Note15<br>-NP6 Note15 -NR6 Note15<br>-NP8 Note15 -NR8 Note15<br>-STP Note4 | DC24V<br>DC12V Note9<br>AC100V Note10<br>AC120V Note10 |
| | | | | | | F10 F15 | BP (for block-off plate) | | | | | | | Blank -STP Note4 | | |
| F10M<br>F15M | 2<br>⋮<br>20 | A<br>AH | L | Blank<br>G | stn. 1<br>⋮<br>stn.□ Note1 | F10<br>F10L<br>F15<br>F15L | T0 TA Note7<br>T1 TB Note7<br>T2 TC Note7<br>T3<br>T4 Note6<br>T5 Note6 | Blank Note4<br>G Note5<br>V Note5 | Blank<br>-P Note16 | Blank<br>-R Note2<br>-83 Note11 | -A1<br>Note3 | Blank -CPS<br>-PN -CPL<br>-PS -CPS3<br>-PL -CPL3<br>-PS3 -39L Note12<br>-PL3 -39N Note12 | -J5 Note13 -J6A Note13<br>-J6 Note13 -J6B Note13<br>-M Note13 -MA Note13<br>-MH Note14 -MAH Note14<br>-J5A Note13 -MB Note13<br>-J5B Note13 -MBH Note14 | Blank<br>-E1 Note8 | Blank<br>-NPM Note15 -NRM Note15<br>-NP6 Note15 -NR6 Note15<br>-NP8 Note15 -NR8 Note15<br>-STP Note4 | DC24V<br>DC12V Note9<br>AC100V Note10, 15<br>AC120V Note10<br>AC240V Note10, 11 |
| | | | | | | F10 F15 | BP (for block-off plate) | | | | | | | Blank -STP Note4 | | |

Notes:
1. Valve mounting location is from the left, with the solenoid on top, and the 4(A), 2(B) ports side in front.
2. When the valve specification is **T1** or **T2**, the manual override lever is placed only on the A side. This is not available with **-39**□.
3. Always enter **-A1**.
4. Cannot be mounted on the external pilot manifold.
5. Cannot be mounted on the internal pilot manifold.
6. Not available in the vacuum valves.
7. Not available in external pilot type and vacuum valves.
8. Not available with the individual exhaust spacer and vacuum valve.
9. Not available in low-current type.
10. Not available in low-current type and tandem 3-port valves.
11. Only for wiring specification **-39**□.
12. Only for **F15** series and not available for valve specification **T1**, **TA**, **TB**, and **TC**. In addition, the valve is used only as a double solenoid for **T2**.
13. Can be selected only when the manifold type is **A**.
14. Can be selected only when the manifold type is **AH**.
15. Not available with DIN connectors (**-39**□).
16. IP65 compliant protective construction to protect against intrusion of dust and water from outside.

Remark: Negative common specifications are also available as made to order products (add **-129W** to the ends of the valve and manifold model order codes). For details, consult us.

## Gasket (gasket and exhaust valve)

**F □ Z - GS1**

**Valve size**
**10:** 10 mm [0.394 in.] width
**15:** 15 mm [0.591 in.] width

## Block-off plate (block-off plate and 2 mounting screws)

**F □ BP**

**Valve size**
**10:** 10 mm [0.394 in.] width
**15:** 15 mm [0.591 in.] width

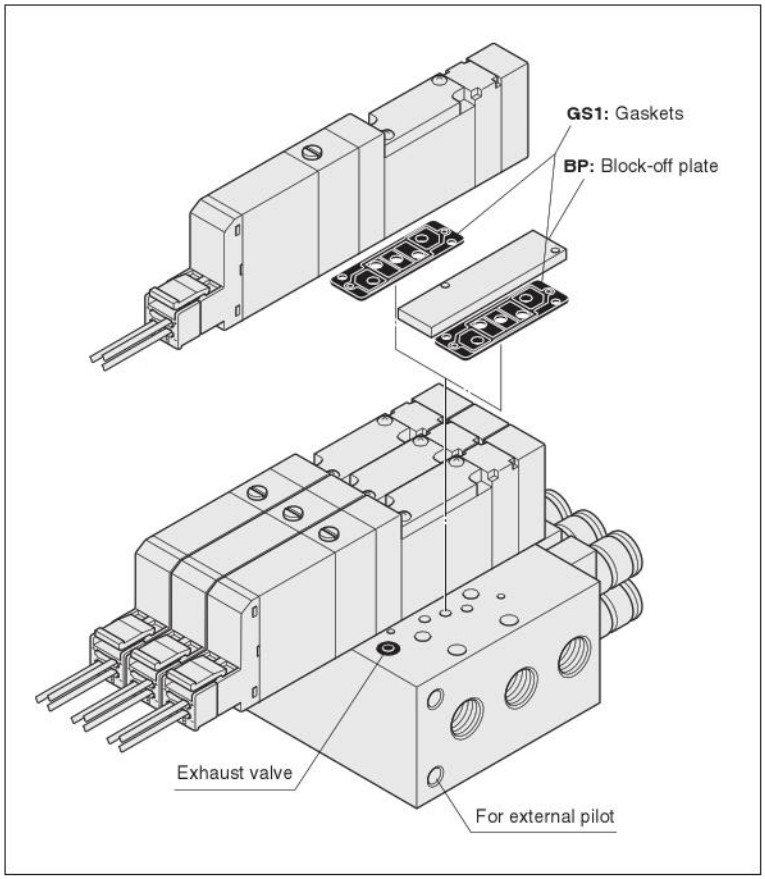


## Connector-related order codes

**JAZ □ - □**

※For details, see p. 19.

**Valve specification**
**Blank:** For **T1, T2, T3, T4, T5, TA, TB, TC**
**0:** For **T0**

**Connector specification**
**CP** : Connector, lead wire length 300 mm [11.8 in.]
**CP3** : Connector, lead wire length 3000 mm [118 in.]
**CPN** : Connector without lead wire (short bar and contacts included)
**PA** : Positive common A type, lead wire length 300 mm [11.8 in.] ※
**PA3** : Positive common A type, lead wire length 3000 mm [118 in.] ※
**PB** : Positive common B type, lead wire length 300 mm [11.8 in.] ※
**PB3** : Positive common B type, lead wire length 3000 mm [118 in.] ※
**PC** : Positive common C type, lead wire length 300 mm [11.8 in.] ※
**PC3** : Positive common C type, lead wire length 3000 mm [118 in.] ※

**FZ - □**

**Valve specification**
For **T1, T2, T3, T4, T5, TA, TB, TC**

**Connector specification**
**CC1.5** : Cabtyre cable length 1500 mm [59 in.] ※
**CC3** : Cabtyre cable length 3000 mm [118 in.] ※

### ● Common connector assembly

**A type: JAZ-PA□※**

Red Common wire (+)
Black A side (–)
White B side (–) (Insert when using as double solenoid) Note

**B type: JAZ-PB□※**

Red Common wire (+)
Black A side (–)
White B side (–) (Insert when using as double solenoid) Note

**C type: JAZ-PC□※**

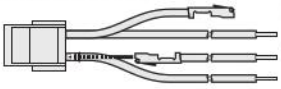

Red Common wire (+)
Black A side (–)
White B side (–) (Insert when using as double solenoid) Note
Red Common wire (+)

※ Lead wire length **Blank:** 300 mm [11.8 in.] **3:** 3000 mm [118 in.]

Note: White lead wire is not available for **JAZ0-P□□**.

Remark: Connector for negative common type also available. For details, see p.19.

## Back pressure prevention valve
**(for monoblock type, 2 pieces)**

**F □ Z - E1**

**Valve size**
**10:** 10 mm [0.394 in.] width
**15:** 15 mm [0.591 in.] width

## Individual air supply and exhaust spacer (Spacer for non-plug-in type, gasket, exhaust valve, and 2 mounting screws)

**F □ Z - □**

**Valve size**
**10:** 10 mm [0.394 in.] width
**15:** 15 mm [0.591 in.] width

**Specification**
**NPM:** Individual air supply spacer (with M5 female thread for F10)
**NP6** : Individual air supply spacer (with $\phi$ 6 fitting for F15)
**NP8** : Individual air supply spacer (with $\phi$ 8 fitting for F15)
**NRM:** Individual exhaust spacer (with M5 female thread for F10)
**NR6** : Individual exhaust spacer (with $\phi$ 6 fitting for F15)
**NR8** : Individual exhaust spacer (with $\phi$ 8 fitting for F15)

※For details, see p. 25.
※Not available with DIN connectors (**-39□**).

## Manifold Order Code Example
(6 units of F10 Series)

**F10M6AL**

**stn.1 ~ 2** **F10T0-A1-PS-J5 DC24V**
**stn.3 ~ 5** **F10T2-A1-PS-J6 DC24V**
**stn.6** **F10BP-J6**

Note: This order code example has no relationship to the illustration at upper right.

## Muffler

**KM - J □**

**Fitting size**
**6:** Outer diameter $\phi$ 6 (for individual exhaust spacer)
**8:** Outer diameter $\phi$ 8 (for individual exhaust spacer)
(Sales unit: Set of 10 mufflers)

## Precautions for Order Codes

● **Manifold outlet specification**
Select from among "dual use fitting blocks", "with female thread blocks" or "with selectable fittings." For repair or replacement, purchase the single valve unit additional parts, **F □ Z-J** (dual use fitting block), **F □ Z-J □** (single use fitting block), or **F □ Z-M □** (female thread block), on p. 45.

● **Orders for valves only**
Place orders from "Single Valve Unit Order Codes" on p. 44. Note, however, that the only available valve outlet type is **A1**. In addition, for common terminal wiring connections, order the common connector assemblies listed above separately.

# F10, F15 Series Monoblock Manifold F Type (Direct Piping Type) Order Codes

## Valve size

**F10M**
10 mm [0.394 in.] width

**F15M**
15 mm [0.591 in.] width

## Valve specification

**T0 :** 2-position, for single solenoid only
**T1 :** 2-position, single solenoid specification
**T2 :** 2-position, double solenoid specification
**T3 :** 3-position, closed center
**T4 :** 3-position, exhaust center
**T5 :** 3-position, pressure center
**TA :** Tandem 3-port (NC and NC)
**TB :** Tandem 3-port (NO and NO)
**TC :** Tandem 3-port (NC and NO)

## Manual override

Manual override button

No protrusion with DIN connector

Manual override lever Note2

Protruding locking type Note6

## Valve outlet type

### 5-port specification

| | | |
|---|---|---|
| **-FJ** | With dual use fitting block Note8 (direct piping type) | **F10:** $\phi$4, $\phi$6 **F15:** $\phi$6, $\phi$8 |
| **-FJ5** | With single use fitting block Note8 (direct piping type) | **F10:** $\phi$4 **F15:** $\phi$6 |
| **-FJ6** | With single use fitting block Note8 (direct piping type) | **F10:** $\phi$6 **F15:** $\phi$8 |
| **-FM** | With female thread block Note8 (direct piping type) | **F10:** M5 × 0.8 **F15:** Rc1/8 |
| **-FMH** | With female thread block Note9 (direct piping type) | **F10:** 10-32UNF **F15:** NPT1/8 |

### 3-port specification

| | | |
|---|---|---|
| **-FJ5A** | With single use fitting block, normally closed (NC) Note8 (direct piping type) | **F10:** $\phi$4 **F15:** $\phi$6 |
| **-FJ5B** | With single use fitting block, normally open (NO) Note8 (direct piping type) | **F10:** $\phi$4 **F15:** $\phi$6 |
| **-FJ6A** | With single use fitting block, normally closed (NC) Note8 (direct piping type) | **F10:** $\phi$6 **F15:** $\phi$8 |
| **-FJ6B** | With single use fitting block, normally open (NO) Note8 (direct piping type) | **F10:** $\phi$6 **F15:** $\phi$8 |
| **-FMA** | With female thread block, normally closed (NC) Note8 (direct piping type) | **F10:** M5 × 0.8 **F15:** Rc1/8 |
| **-FMAH** | With female thread block, normally closed (NC) Note9 (direct piping type) | **F10:** 10-32UNF **F15:** NPT1/8 |
| **-FMB** | With female thread block, normally open (NO) Note8 (direct piping type) | **F10:** M5 × 0.8 **F15:** Rc1/8 |
| **-FMBH** | With female thread block, normally open (NO) Note9 (direct piping type) | **F10:** 10-32UNF **F15:** NPT1/8 |

**Caution:** The 3-port specifications are only available in the valve specification **T0**, **T1**, and **T2**.

## Wiring specification

L type plug connector
Without connector

S type plug connector
Lead wire 3000 mm [118 in.]

Pre-wired positive common terminal
S type plug connector
Lead wire 3000 mm [118 in.]

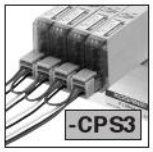


S type plug connector
Without connector

L type plug connector
Lead wire 3000 mm [118 in.]

Pre-wired positive common terminal
L type plug connector
Lead wire 3000 mm [118 in.]

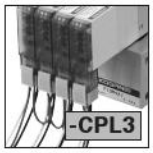


S type plug connector
Lead wire 300 mm [11.8 in.]

Pre-wired positive common terminal
S type plug connector
Lead wire 300 mm [11.8 in.]

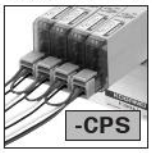


DIN connector type with indicator Note7

L type plug connector
Lead wire 300 mm [11.8 in.]

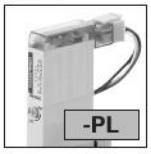


Pre-wired positive common terminal
L type plug connector
Lead wire 300 mm [11.8 in.]

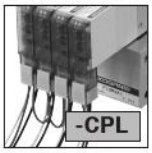


DIN connector type without connector Note7

**-39N**

## Individual air supply and exhaust spacer, stop valve

**Blank :** No spacer and no stop valve
**-NPM :** Individual air supply spacer (with M5 female thread for F10) Note10
**-NP6 :** Individual air supply spacer (with $\phi$6 fitting for F15) Note10
**-NP8 :** Individual air supply spacer (with $\phi$8 fitting for F15) Note10
**-NRM :** Individual exhaust spacer (with M5 female thread for F10) Note10
**-NR6 :** Individual exhaust spacer (with $\phi$6 fitting for F15) Note10
**-NR8 :** Individual exhaust spacer (with $\phi$8 fitting for F15) Note10
**-STP :** With stop valve

For details, see p. 23, 25.

## Back pressure prevention valve

**Blank** No back pressure prevention valve

**-E1** With back pressure prevention valve Note3

## Valve size

**F10** Standard type

**F10L** Low-current type

**F15** Standard type

**F15L** Low-current type

Note: Valves of **F10**□ and **F15**□ cannot be mounted together.

| Valve size | Valve units | Manifold type | Station | Valve size | Valve specification | IP specification | Manual override | Valve outlet type | Wiring specification | Back pressure prevention valve | Individual air supply and exhaust spacer, stop valve | Voltage |
|---|---|---|---|---|---|---|---|---|---|---|---|---|
| Manifold model | | | | | Mounting valve model | | | | | | | |
| F10M<br>F15M | 2<br>⋮<br>20 | F<br>FH | stn. 1<br>⋮<br>stn.□ Note1 | F10<br>F10L<br>F15<br>F15L | T0 TA<br>T1 TB<br>T2 TC<br>T3<br>T4<br>T5 | Blank<br>-P Note11 | Blank<br>-R Note2<br>-83 Note6 | -FJ Note8 -FJ6A Note8<br>-FJ5 Note8 -FJ6B Note8<br>-FJ6 Note8 -FMA Note8<br>-FM Note8 -FMAH Note9<br>-FMH Note9 -FMB Note8<br>-FJ5A Note8 -FMBH Note9<br>-FJ5B Note8 | Blank -CPS<br>-PN -CPL<br>-PS -CPS3<br>-PL -CPL3<br>-PS3 -39L Note7<br>-PL3 -39N Note7 | Blank<br>-E1 Note3 | Blank<br>-NPM Note10 -NRM Note10<br>-NP6 Note10 -NR6 Note10<br>-NP8 Note10 -NR8 Note10<br>-STP | DC24V<br>DC12V Note4<br>AC100V Note5, 10<br>AC120V Note5<br>AC240V Note5, 8 |
| | | | | F10 F15 | BP (for block-off plate) | | | | | | Blank -STP | |

Notes: 1. Valve mounting location is from the left, with the solenoid on top, and the 4(A), 2(B) ports side in front.
2. When the valve specification is **T1** or **T2**, the manual override lever is placed only on the A side. This is not available with **-39**□.
3. Not available with the individual exhaust spacer.
4. Not available in low-current type.
5. Not available in low-current type and tandem 3-port valves.
6. Only for wiring specification **-39**□.
7. Only for **F15** series and not available for valve specification **T1**, **TA**, **TB**, and **TC**. In addition, the valve is used only as a double solenoid for **T2**.
8. Can be selected only when the manifold type is **F**.
9. Can be selected only when the manifold type is **FH**.
10. Not available with DIN connectors (**-39**□).
11. IP65 compliant protective construction to protect against intrusion of dust and water from outside.

Remarks: 1. The external pilot type valve cannot be mounted on the F type manifold.
2. Negative common specifications are also available as made to order products (add **-129W** to the ends of the valve and manifold model order codes). For details, consult us.

## Gasket (gasket and exhaust valve)

**F □ Z - GS1**

**Valve size**
**10:** 10 mm [0.394 in.] width
**15:** 15 mm [0.591 in.] width

## Block-off plate (block-off plate and 2 mounting screws)

**F □ BP**

**Valve size**
**10:** 10 mm [0.394 in.] width
**15:** 15 mm [0.591 in.] width

## Connector-related order codes

**JAZ □ - □**

※For details, see p. 19.

**Valve specification**
**Blank:** For **T1, T2, T3, T4, T5, TA, TB, TC**
**0:** For **T0**

**Connector specification**
**CP** : Connector, lead wire length 300 mm [11.8 in.]
**CP3** : Connector, lead wire length 3000 mm [118 in.]
**CPN:** Connector without lead wire (short bar, contacts included)
**PA** : Positive common A type, lead wire length 300 mm [11.8 in.] ※
**PA3** : Positive common A type, lead wire length 3000 mm [118 in.] ※
**PB** : Positive common B type, lead wire length 300 mm [11.8 in.] ※
**PB3** : Positive common B type, lead wire length 3000 mm [118 in.] ※
**PC** : Positive common C type, lead wire length 300 mm [11.8 in.] ※
**PC3** : Positive common C type, lead wire length 3000 mm [118 in.] ※

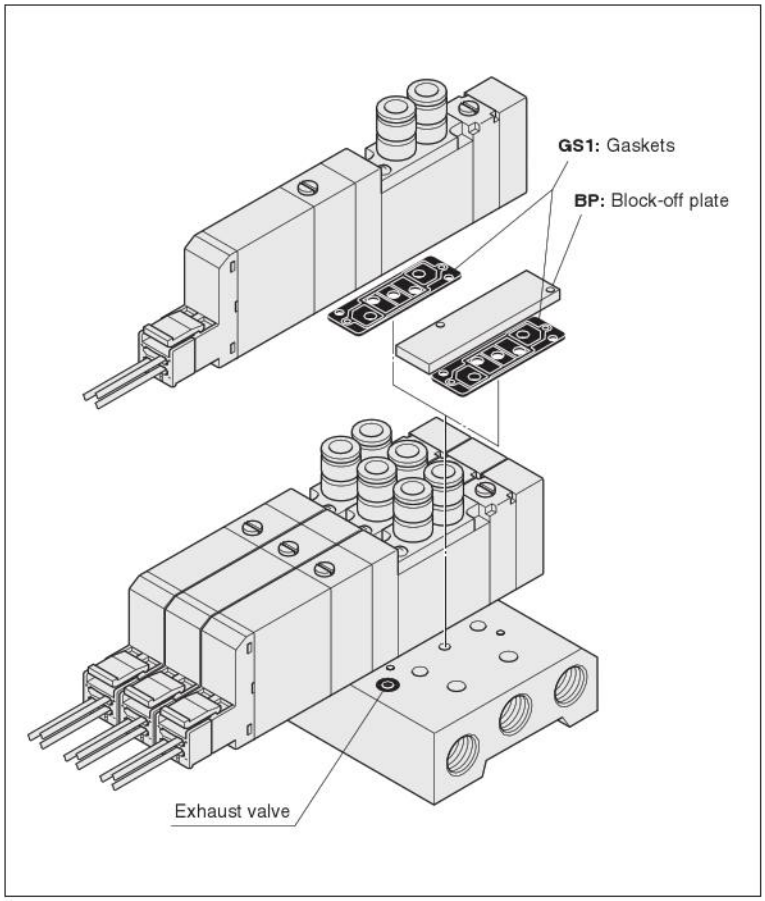


**FZ - □**

**Valve specification**
For **T1, T2, T3, T4, T5, TA, TB, TC**

**Connector specification**
**CC1.5** : Cabtyre cable length 1500 mm [59 in.] ※
**CC3** : Cabtyre cable length 3000 mm [118 in.] ※

### ● Common connector assembly

**A type: JAZ-PA□※**

Red Common wire (+)
Black A side (–)
White B side (–) (Insert when using as double solenoid) Note

**B type: JAZ-PB□※**

Red Common wire (+)
Black A side (–)
White B side (–) (Insert when using as double solenoid) Note

**C type: JAZ-PC□※**

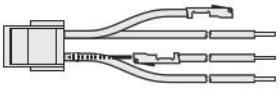

Red Common wire (+)
Black A side (–)
White B side (–) (Insert when using as double solenoid) Note
Red Common wire (+)

※ Lead wire length **Blank:** 300 mm [11.8 in.]
**3:** 3000 mm [118 in.]

Note: White lead wire is not available for **JAZ0-P□□**.

Remark: Connector for negative common type also available. For details, see p. 19.

### Manifold Order Code Example

(4 units of F10 Series)

**F10M4F**

| | |
|---|---|
| **stn.1 ~ 2** | **F10T0-FJ5-PS DC24V** |
| **stn.3** | **F10T2-FJ6-PS DC24V** |
| **stn.4** | **F10BP** |

Note: This order code example has no relationship to the illustration at upper right.

## Back pressure prevention valve

**(for monoblock type, 2 pieces)**

**F □ Z - E1**

**Valve size**
**10:** 10 mm [0.394 in.] width
**15:** 15 mm [0.591 in.] width

## Individual air supply and exhaust spacer (Spacer for non-plug-in type, gasket, exhaust valve, and 2 mounting screws)

**F □ Z - □**

**Valve size**
**10:** 10 mm [0.394 in.] width
**15:** 15 mm [0.591 in.] width

**Specification**
**NPM:** Individual air supply spacer (with M5 female thread for F10)
**NP6** : Individual air supply spacer (with $\phi$ 6 fitting for F15)
**NP8** : Individual air supply spacer (with $\phi$ 8 fitting for F15)
**NRM:** Individual exhaust spacer (with M5 female thread for F10)
**NR6** : Individual exhaust spacer (with $\phi$ 6 fitting for F15)
**NR8** : Individual exhaust spacer (with $\phi$ 8 fitting for F15)

※For details, see p. 25.
※Not available with DIN connectors (**-39□**).

## Muffler

**KM - J □**

**Fitting size**
**6:** Outer diameter $\phi$ 6 (for individual exhaust spacer)
**8:** Outer diameter $\phi$ 8 (for individual exhaust spacer)
(Sales unit: Set of 10 mufflers)

## Precautions for Order Codes

● **Orders for valves only**
Place orders from "Single Valve Unit Order Codes" on p. 44.
Select from valve outlet types **-FJ, -FJ5, -FJ6, -FM□, -FJ5A, -FJ5B, -FJ6A, -FJ6B, -FMA□**, or **-FMB□**. In addition, for common terminal wiring connections, order the common connector assemblies listed above separately.

# F10, F15 Series Monoblock Manifold A Type, Wire-Saving Type (Base Piping Type) Order Codes

## Valve size

**F10M** 10 mm [0.394 in.] width

**F15M** 15 mm [0.591 in.] width

## Manifold outlet specification

With dual use fitting blocks (base piping type)

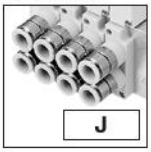


**Outlet port fitting**
**F10:** $\phi$4, $\phi$6
**F15:** $\phi$6, $\phi$8

With selectable fittings (base piping type)

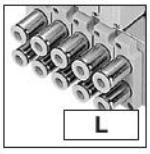


**Outlet port should be selected in accordance with the manifold fitting specification.**

With female thread blocks (base piping type)

**Outlet port female thread**
**F10:** M5 × 0.8
**F15:** Rc1/8

## Wiring specifications (wiring block)

(no power supply terminal only)

Flat cable connector (with socket and strain relief)

**-F100N:** 10-pin
**-F101N:** 10-pin
**-F200N:** 20-pin
**-F201N:** 20-pin
**-F260N:** 26-pin
For derails, see p. 92.

D-sub connector

(M2.6 mounting screws)
**-D250N:** 25-pin Note13
**-D251N:** 25-pin Note13
(4-40UNC mounting screws)
**-D250NU:** 25-pin Note14
**-D251NU:** 25-pin Note14
For derails, see p. 92.

## Pilot specification

**Blank** Internal pilot manifold

**G** External pilot manifold

## Operation type

**Blank**
Internal pilot type Note5

**G**
External pilot type Note6 (for positive pressure)

**V**
External pilot type Note6 (for vacuum) ※
※: This is a vacuum valve.

Note: Cannot be mounted together with a positive pressure valve.

## Manual override

Manual override button

Manual override lever Note3

## Valve outlet type

With plate Note4 (base piping type)

## Wiring specification

**-PN**
S type plug connector Note4

## Individual air supply and exhaust spacer, stop valve

**Blank:** No spacer and no stop valve
**-NPM :** Individual air supply spacer (with M5 female thread for F10)
**-NP6 :** Individual air supply spacer (with $\phi$6 fitting for F15)
**-NP8 :** Individual air supply spacer (with $\phi$8 fitting for F15)
**-NRM :** Individual exhaust spacer (with M5 female thread for F10)
**-NR6 :** Individual exhaust spacer (with $\phi$6 fitting for F15)
**-NR8 :** Individual exhaust spacer (with $\phi$8 fitting for F15)
**-STP :** With stop valve Note5
For details, see p. 23, 25.

## Manifold fitting specification

### 5-port specification

| | | |
|---|---|---|
| **-J5** | With single use fitting block Note13 (base piping type) | **F10:** $\phi$4 **F15:** $\phi$6 |
| **-J6** | With single use fitting block Note13 (base piping type) | **F10:** $\phi$6 **F15:** $\phi$8 |
| **-M** | With female thread block Note13 (base piping type) | **F10:** M5 × 0.8 **F15:** Rc1/8 |
| **-MH** | With female thread block Note14 (base piping type) | **F10:** 10-32UNF **F15:** NPT1/8 |

### 3-port specification

| | | |
|---|---|---|
| **-J5A** | With single use fitting block, normally closed (NC) Note13 (base piping type) | **F10:** $\phi$4 **F15:** $\phi$6 |
| **-J5B** | With single use fitting block, normally open (NO) Note13 (base piping type) | **F10:** $\phi$4 **F15:** $\phi$6 |
| **-J6A** | With single use fitting block,normally closed (NC) Note13 (base piping type) | **F10:** $\phi$6 **F15:** $\phi$8 |
| **-J6B** | With single use fitting block, normally open (NO) Note13 (base piping type) | **F10:** $\phi$6 **F15:** $\phi$8 |
| **-MA** | With female thread block, normally closed (NC) Note13 (base piping type) | **F10:** M5 × 0.8 **F15:** Rc1/8 |
| **-MAH** | With female thread block, normally closed (NC) Note14 (base piping type) | **F10:** 10-32UNF **F15:** NPT1/8 |
| **-MB** | With female thread block,normally open (NO) Note13 (base piping type) | **F10:** M5 × 0.8 **F15:** Rc1/8 |
| **-MBH** | With female thread block, normally open (NO) Note14 (base piping type) | **F10:** 10-32UNF **F15:** NPT1/8 |

**Caution:** The 3-port specifications are only available in the valve specification **T0**, **T1**, and **T2**.

## Valve specification

**T0 :** 2-position, for single solenoid only
**T1 :** 2-position, single solenoid specification
**T2 :** 2-position, double solenoid specification
**T3 :** 3-position, closed center
**T4 :** 3-position, exhaust center Note9
**T5 :** 3-position, pressure center Note8
**TA :** Tandem 3-port (NC and NC) Note9
**TB :** Tandem 3-port (NO and NO) Note9
**TC :** Tandem 3-port (NC and NO) Note9

## Valve size

**F10** Standard type

**F10L** Low-current type

**F15** Standard type

**F15L** Low-current type

Note: Valves of **F10**□ and **F15**□ cannot be mounted together.

## Wiring connection specification

**Blank**
**Packed wiring:** Wired to match the specifications of the mounted valve.

**-W**
**Double wiring:** Wiring is always for the double solenoid, regardless of the specifications of the mounted valve.

## Back pressure prevention valve

**Blank** No back pressure prevention valve

**-E1** With back pressure prevention valve Note10

| Valve size | Valve units | Manifold type | Manifold outlet specification | Pilot specification | Wiring specifications | Wiring connection specification | Station | Valve size | Valve specification | Operation type | Manual override | Valve outlet type | Wiring specification | Manifold fitting specification | Back pressure prevention valve | Individual air supply and exhaust spacer, stop valve | Voltage |
|---|---|---|---|---|---|---|---|---|---|---|---|---|---|---|---|---|---|
| Manifold model | | | | | | | Mounting valve model | | | | | | | | | | |
| F10M<br>F15M | 2<br>⋮<br>□ Note1 | A | J<br>M | Blank<br>G | -F100N<br>-F101N<br>-F200N<br>-F201N<br>-F260N<br>-D250N<br>-D251N | Blank<br>-W | stn. 1<br>⋮<br>stn.□ Note2 | F10<br>F10L<br>F15<br>F15L | T0 TA Note9<br>T1 TB Note9<br>T2 TC Note9<br>T3<br>T4 Note8<br>T5 Note8 | Blank Note5<br>G Note6<br>V Note6 | Blank<br>-R Note3 | -A1 Note4 | -PN Note4 | | Blank<br>-E1 Note10 | Blank<br>-NPM -NRM<br>-NP6 -NR6<br>-NP8 -NR8<br>-STP Note5 | DC24V<br>DC12V Note11<br>AC100V Note12<br>AC120V Note12 |
| | | | | | | | | F10 F15 | BP (for block-off plate) Note7 | | | | | | | Blank -STP Note5 | |
| F10M<br>F15M | 2<br>⋮<br>□ Note1 | A<br>AH | L | Blank<br>G | -F100N<br>-F101N<br>-F200N<br>-F201N<br>-F260N<br>-D250N Note13<br>-D251N Note13<br>-D250NU Note14<br>-D251NU Note14 | Blank<br>-W | stn. 1<br>⋮<br>stn.□ Note2 | F10<br>F10L<br>F15<br>F15L | T0 TA Note9<br>T1 TB Note9<br>T2 TC Note9<br>T3<br>T4 Note8<br>T5 Note8 | Blank Note5<br>G Note6<br>V Note6 | Blank<br>-R Note3 | -A1 Note4 | -PN Note4 | -J5 Note13 -J6A Note13<br>-J6 Note13 -J6B Note13<br>-M Note13 -MA Note13<br>-MH Note14 -MAH Note14<br>-J5A Note13 -MB Note13<br>-J5B Note13 -MBH Note14 | Blank<br>-E1 Note10 | Blank<br>-NPM -NRM<br>-NP6 -NR6<br>-NP8 -NR8<br>-STP Note5 | DC24V<br>DC12V Note11<br>AC100V Note12<br>AC120V Note12 |
| | | | | | | | | F10 F15 | BP (for block-off plate) Note7 | | | | | | | Blank -STP Note5 | |

Notes:
1. For the maximum number of units, see the table for maximum number of valve units by wiring specification, on p. 51.
2. Valve mounting location is from the left, with the solenoid on top, and the 4(A), 2(B) ports side in front.
3. When the valve specification is **T1** or **T2**, the manual override lever is placed only on the A side.
4. Always enter **-A1** and **-PN**.
5. Cannot be mounted on the external pilot manifold.
6. Cannot be mounted on the internal pilot manifold.
7. Caution should be exercised that the block-off plate wiring is always double wiring (allocated 2 control pins at 1 stn.), regardless of the wiring connection specification. For single wiring, see p. 51.
8. Not available in the vacuum valves.
9. Not available in external pilot type and vacuum valves.
10. Not available with the individual exhaust spacer and vacuum valve.
11. Not available in low-current type.
12. Not available in low-current type and tandem 3-port valves. In addition, only available when the wiring specification is a D-sub connector.
13. Can be selected only when the manifold type is **A**.
14. Can be selected only when the manifold type is **AH**.

## Gasket (gasket and exhaust valve)

**F □ Z - GS1**

**Valve size**
**10:** 10 mm [0.394 in.] width
**15:** 15 mm [0.591 in.] width

## Block-off plate (block-off plate and 2 mounting screws)

**F □ BP**

**Valve size**
**10:** 10 mm [0.394 in.] width
**15:** 15 mm [0.591 in.] width

## Back pressure prevention valve
**(for monoblock type, 2 pieces)**

**F □ Z - E1**

**Valve size**
**10:** 10 mm [0.394 in.] width
**15:** 15 mm [0.591 in.] width

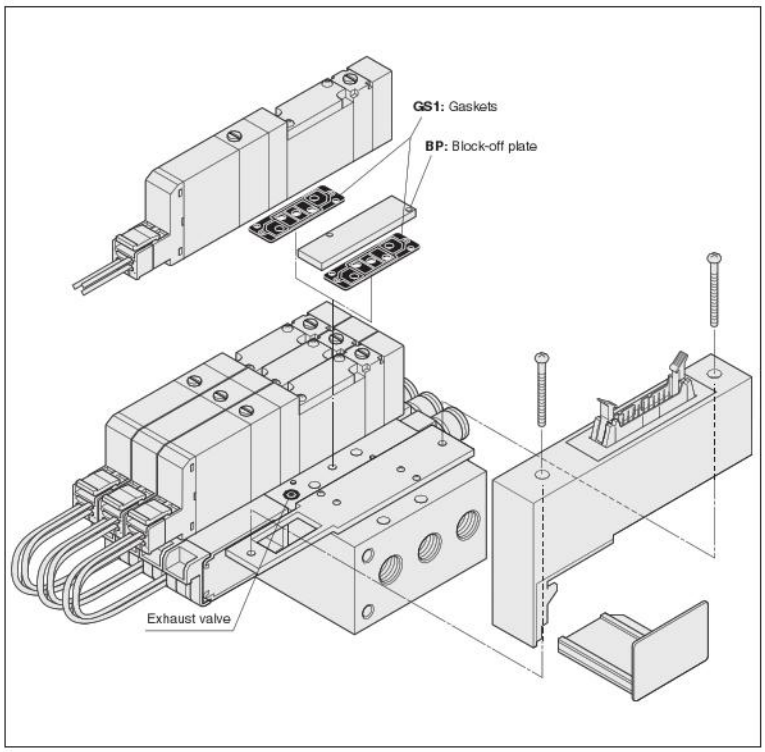


## Individual air supply and exhaust spacer (Spacer for non-plug-in type, gasket, exhaust valve, and 2 mounting screws)

**F □ Z - □**

| Valve size | Specification | |
|---|---|---|
| **10:** 10 mm [0.394 in.] width | **NPM:** | Individual air supply spacer (with M5 female thread for F10) |
| | **NP6 :** | Individual air supply spacer (with $\phi$ 6 fitting for F15) |
| **15:** 15 mm [0.591 in.] width | **NP8 :** | Individual air supply spacer (with $\phi$ 8 fitting for F15) |
| | **NRM:** | Individual exhaust spacer (with M5 female thread for F10) |
| | **NR6 :** | Individual exhaust spacer (with $\phi$ 6 fitting for F15) |
| | **NR8 :** | Individual exhaust spacer (with $\phi$ 8 fitting for F15) |

※For details, see p. 25.

## Muffler

**KM - J □**

**Fitting size**
**6:** Outer diameter $\phi$ 6 (for individual exhaust spacer)
**8:** Outer diameter $\phi$ 8 (for individual exhaust spacer)
(Sales unit: Set of 10 mufflers)

### Manifold Order Code Example
(6 units of F10 Series)

**F10M6AL-F201N**

**stn.1 ~ 2** **F10T0-A1-PN-J5 DC24V**
**stn.3 ~ 5** **F10T2-A1-PN-J6 DC24V**
**stn.6** **F10BP-J6**

Note: This order code example has no relationship to the illustration at upper right.

### ■ Table for maximum number of valve units by wiring specification

| Wiring specification | Max. outputs | Maximum number of units — Wiring connection specification: Packed wiring (**Blank**) | Maximum number of units — Wiring connection specification: Double wiring (**-W**) |
|---|---|---|---|
| **F100N** Flat cable (10P) | 8 | Varies depending on the number of mounted single solenoids, double solenoids, and block-off plates. The number of controlled solenoids should be designated as the maximum number of outputs or less. | 4 units |
| **F101N** Flat cable (10P) | 8 | | 4 units |
| **F200N** Flat cable (20P) | 16 | | 8 units |
| **F201N** Flat cable (20P) | 16 | | 8 units |
| **F260N** Flat cable (26P) | 20 | | 10 units |
| **D250N**□ D-sub connector (25P) | 16 | | 8 units |
| **D251N**□ D-sub connector (25P) | 20 | | 10 units |

## Precautions for Order Codes

- **Manifold outlet specification**
  Select from among "dual use fitting blocks", "with female thread blocks" or "with selectable fittings." For repair or replacement, purchase the single valve unit additional parts, **F □ Z-J** (dual use fitting block), **F □ Z-J □** (single use fitting block), or **F □ Z-M □** (female thread block), on p. 45.
- **Orders for valves only**
  Place orders from "Single Valve Unit Order Codes" on p. 44. Note, however, that the only available valve outlet type is **A1**.
- **Wiring connection specification**
  **Blank** (packed wiring): Wired to match the specifications of the mounted valve.
  **-W** (double wiring): Wiring is always for the double solenoid, regardless of the specifications of the mounted valve.

**Caution**

Caution should be exercised that the block-off plate wiring is always double wiring (allocated 2 control pins at 1 stn.), regardless of the wiring connection specification.
The block-off plate wiring can be made as wiring for a single solenoid. Add **-1W** to the end of the block-off plate order code in the case.
For details, consult us.

# F10, F15 Series Monoblock Manifold F Type, Wire-Saving Type (Direct Piping Type) Order Codes

## ■ Valve size

**F10M**
10 mm [0.394 in.] width

**F15M**
15 mm [0.591 in.] width

## ■ Valve specification

**T0 :** 2-position, for single solenoid only
**T1 :** 2-position, single solenoid specification
**T2 :** 2-position, double solenoid specification
**T3 :** 3-position, closed center
**T4 :** 3-position, exhaust center
**T5 :** 3-position, pressure center
**TA :** Tandem 3-port (NC and NC)
**TB :** Tandem 3-port (NO and NO)
**TC :** Tandem 3-port (NC and NO)

## ■ Manual override

Manual override button

Manual override lever[Note3]

## ■ Valve outlet type

### 5-port specification

| | | |
|---|---|---|
| **-FJ** | With dual use fitting block[Note9] (direct piping type) | **F10:** $\phi$4, $\phi$6<br>**F15:** $\phi$6, $\phi$8 |
| **-FJ5** | With single use fitting block[Note9] (direct piping type) | **F10:** $\phi$4<br>**F15:** $\phi$6 |
| **-FJ6** | With single use fitting block[Note9] (direct piping type) | **F10:** $\phi$6<br>**F15:** $\phi$8 |
| **-FM** | With female thread block[Note9] (direct piping type) | **F10:** M5 × 0.8<br>**F15:** Rc1/8 |
| **-FMH** | With female thread block[Note10] (direct piping type) | **F10:** 10-32UNF<br>**F15:** NPT1/8 |

### 3-port specification

| | | |
|---|---|---|
| **-FJ5A** | With single use fitting block, normally closed (NC)[Note9] (direct piping type) | **F10:** $\phi$4<br>**F15:** $\phi$6 |
| **-FJ5B** | With single use fitting block, normally open (NO)[Note9] (direct piping type) | **F10:** $\phi$4<br>**F15:** $\phi$6 |
| **-FJ6A** | With single use fitting block, normally closed (NC)[Note9] (direct piping type) | **F10:** $\phi$6<br>**F15:** $\phi$8 |
| **-FJ6B** | With single use fitting block, normally open (NO)[Note9] (direct piping type) | **F10:** $\phi$6<br>**F15:** $\phi$8 |
| **-FMA** | With female thread block, normally closed (NC)[Note9] (direct piping type) | **F10:** M5 × 0.8<br>**F15:** Rc1/8 |
| **-FMAH** | With female thread block, normally closed (NC)[Note10] (direct piping type) | **F10:** 10-32UNF<br>**F15:** NPT1/8 |
| **-FMB** | With female thread block, normally open (NO)[Note9] (direct piping type) | **F10:** M5 × 0.8<br>**F15:** Rc1/8 |
| **-FMBH** | With female thread block, normally open (NO)[Note10] (direct piping type) | **F10:** 10-32UNF<br>**F15:** NPT1/8 |

**Caution:** The 3-port specifications are only available in the valve specification **T0**, **T1**, and **T2**.

## ■ Wiring specification (wiring block)

(no power supply terminal only)

Flat cable connector (with socket and strain relief)

**-F100N:** 10-pin
**-F101N:** 10-pin
**-F200N:** 20-pin
**-F201N:** 20-pin
**-F260N:** 26-pin
For derails, see p. 92.

D-sub connector

(M2.6 mounting screws)
**-D250N:** 25-pin[Note9]
**-D251N:** 25-pin[Note9]
(4-40UNC mounting screws)
**-D250NU:** 25-pin[Note10]
**-D251NU:** 25-pin[Note10]
For derails, see p. 92.

## ■ Wiring connection specification

**Blank**
**Packed wiring:** Wired to match the specifications of the mounted valve.

**-W**
**Double wiring:** Wiring is always for the double solenoid, regardless of the specifications of the mounted valve.

## ■ Valve size

| | |
|---|---|
| **F10** | Standard type |
| **F10L** | Low-current type |
| **F15** | Standard type |
| **F15L** | Low-current type |

Note: Valves of **F10**□ and **F15**□ cannot be mounted together.

## ■ Individual air supply and exhaust spacer, stop valve

**Blank:** No spacer and no stop valve
**-NPM :** Individual air supply spacer (with M5 female thread for F10)
**-NP6 :** Individual air supply spacer (with $\phi$6 fitting for F15)
**-NP8 :** Individual air supply spacer (with $\phi$8 fitting for F15)
**-NRM :** Individual exhaust spacer (with M5 female thread for F10)
**-NR6 :** Individual exhaust spacer (with $\phi$6 fitting for F15)
**-NR8 :** Individual exhaust spacer (with $\phi$8 fitting for F15)
**-STP :** With stop valve
For details, see p. 23, 25.

## ■ Back pressure prevention valve

**Blank** No back pressure prevention valve
**-E1** With back pressure prevention valve[Note6]

## ■ Wiring specification

**-PN**
S type plug connector[Note4]

| Valve size | Valve units | Manifold type | Wiring specification | Wiring connection specification | Station | Valve size | Valve specification | Manual override | Valve outlet type | Wiring specification | Back pressure prevention valve | Individual air supply and exhaust spacer, stop valve | Voltage |
|---|---|---|---|---|---|---|---|---|---|---|---|---|---|
| Manifold model | | | | | Mounting valve model | | | | | | | | |
| F10M<br>F15M | 2<br>⋮<br>□ Note1 | F<br>FH | -F100N<br>-F101N<br>-F200N<br>-F201N<br>-F260N<br>-D250N[Note9]<br>-D251N[Note9]<br>-D250NU[Note10]<br>-D251NU[Note10] | Blank<br>-W | stn. 1<br>⋮<br>stn.□ Note2 | F10<br>F10L<br>F15<br>F15L<br>F10 F15 | T0 TA<br>T1 TB<br>T2 TC<br>T3<br>T4<br>T5<br>BP (for block-off plate)[Note5] | Blank<br>-R[Note3] | -FJ[Note9] -FJ6A[Note9]<br>-FJ5[Note9] -FJ6B[Note9]<br>-FJ6[Note9] -FMA[Note9]<br>-FM[Note9] -FMAH[Note10]<br>-FMH[Note10] -FMB[Note9]<br>-FJ5A[Note9] -FMBH[Note10]<br>-FJ5B[Note9] | -PN<br>Note4 | Blank<br>-E1[Note6] | Blank<br>-NPM -NRM<br>-NP6 -NR6<br>-NP8 -NR8<br>-STP<br>Blank -STP | DC24V<br>DC12V[Note7]<br>AC100V[Note8]<br>AC120V[Note8] |

Notes: 1. For the maximum number of units, see the table for maximum number of valve units by wiring specification, on p. 53.
2. Valve mounting location is from the left, with the solenoid on top, and the 4(A), 2(B) ports side in front.
3. When the valve specification is **T1** or **T2**, the manual override lever is placed only on the A side.
4. Always enter **-PN**.
5. Caution should be exercised that the block-off plate wiring is always double wiring (allocated 2 control pins at 1 stn.), regardless of the wiring connection specification. For single wiring, see p. 53.
6. Not available with the individual exhaust spacer.
7. Not available in low-current type.
8. Not available in low-current type and tandem 3-port valves. In addition, only available when the wiring specification is a D-sub connector.
9. Can be selected only when the manifold type is **F**.
10. Can be selected only when the manifold type is **FH**.

Remark: The external pilot type valve cannot be mounted on the F type manifold.

## Gasket (gasket and exhaust valve)

**F □ Z - GS1**

**Valve size**
**10:** 10 mm [0.394 in.] width
**15:** 15 mm [0.591 in.] width

## Block-off plate (block-off plate and 2 mounting screws)

**F □ BP**

**Valve size**
**10:** 10 mm [0.394 in.] width
**15:** 15 mm [0.591 in.] width

## Back pressure prevention valve (for monoblock type, 2 pieces)

**F □ Z - E1**

**Valve size**
**10:** 10 mm [0.394 in.] width
**15:** 15 mm [0.591 in.] width

## Individual air supply and exhaust spacer (Spacer for non-plug-in type, gasket, exhaust valve, and 2 mounting screws)

**F □ Z - □**

| Valve size | Specification | |
|---|---|---|
| **10:** 10 mm [0.394 in.] width | **NPM:** | Individual air supply spacer (with M5 female thread for F10) |
| | **NP6 :** | Individual air supply spacer (with $\phi$ 6 fitting for F15) |
| **15:** 15 mm [0.591 in.] width | **NP8 :** | Individual air supply spacer (with $\phi$ 8 fitting for F15) |
| | **NRM:** | Individual exhaust spacer (with M5 female thread for F10) |
| | **NR6 :** | Individual exhaust spacer (with $\phi$ 6 fitting for F15) |
| | **NR8 :** | Individual exhaust spacer (with $\phi$ 8 fitting for F15) |

※For details, see p. 25.

## Muffler

**KM - J □**

**Fitting size**
**6:** Outer diameter $\phi$ 6 (for individual exhaust spacer)
**8:** Outer diameter $\phi$ 8 (for individual exhaust spacer)
(Sales unit: Set of 10 mufflers)

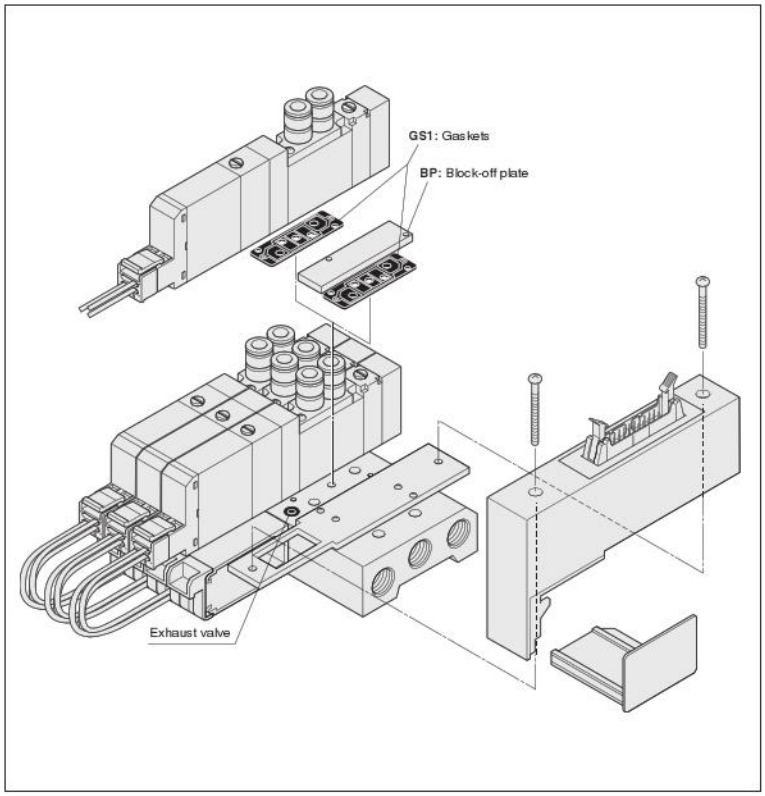


## Manifold Order Code Example

(4 units of F10 Series)

**F10M4F-F201**

| | |
|---|---|
| **stn.1～2** | **F10T0-FJ5-PN DC24V** |
| **stn.3** | **F10T2-FJ6-PN DC24V** |
| **stn.4** | **F10BP** |

Note: This order code example has no relationship to the illustration at upper right.

## ■ Table for maximum number of valve units by wiring specification

| | | Maximum number of units | |
|---|---|---|---|
| | | Wiring connection specification | |
| Wiring specification | Max. outputs | Packed wiring (**Blank**) | Double wiring (**-W**) |
| **F100N** Flat cable (10P) | 8 | Varies depending on the number of mounted single solenoids, double solenoids, and block-off plates. The number of controlled solenoids should be designated as the maximum number of outputs or less. | 4 units |
| **F101N** Flat cable (10P) | 8 | | 4 units |
| **F200N** Flat cable (20P) | 16 | | 8 units |
| **F201N** Flat cable (20P) | 16 | | 8 units |
| **F260N** Flat cable (26P) | 20 | | 10 units |
| **D250N**□ D-sub connector (25P) | 16 | | 8 units |
| **D251N**□ D-sub connector (25P) | 20 | | 10 units |

## Precautions for Order Codes

● **Orders for valves only**
Place orders from "Single Valve Unit Order Codes" on p. 44.
Select from valve outlet types **-FJ**, **-FJ5**, **-FJ6**, **-FM**□, **-FJ5A**, **-FJ5B**, **-FJ6A**, **-FJ6B**, **-FMA**□, or **-FMB**□.

● **Wiring connection specification**
**Blank** (packed wiring): Wired to match the specifications of the mounted valve.
**-W** (double wiring): Wiring is always for the double solenoid, regardless of the specifications of the mounted valve.

**Caution**

Caution should be exercised that the block-off plate wiring is always double wiring (allocated 2 control pins at 1 stn.), regardless of the wiring connection specification.
The block-off plate wiring can be made as wiring for a single solenoid. Add **-1W** to the end of the block-off plate order code in the case.
For details, consult us.

# F10, F15 Series PC Board Manifold A Type (Base Piping Type) Order Codes

## ■ Valve size

**F10M**
10 mm [0.394 in.] width

**F15M**
15 mm [0.591 in.] width

## ■ Manifold outlet specification

With dual use fitting blocks
(base piping type)

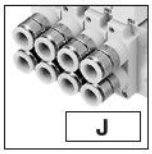


**Outlet port fitting**
**F10:** $\phi$4, $\phi$6
**F15:** $\phi$6, $\phi$8

With female thread blocks (base piping type)

**Outlet port female thread**
**F10:** M5 × 0.8
**F15:** Rc1/8

With selectable fittings
(base piping type)

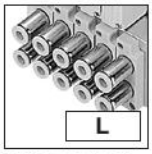


**Outlet port should be selected in accordance with the manifold fitting specification.**

## ■ Pilot specification

**Blank**
Internal pilot manifold

**G**
External pilot manifold

## ■ Wiring specification (wiring block)

Flat cable connector
(with socket and strain relief)

**-F200:** 20-pin
**-F201:** 20-pin
For details, see p. 90.

## ■ Wiring connection specification

**-S**
**Single wiring**[Note1]

**-W**
**Double wiring**[Note2]

| | Valve size | Valve units | | Manifold outlet specification | Pilot specification | Wiring specification | Wiring connection specification |
|---|---|---|---|---|---|---|---|
| | Manifold model | | | | | | |
| Single wiring type[Note1] | F10M<br>F15M | 6<br>8<br>10<br>12<br>14<br>16<br>Note3 | AP | J<br>M | Blank<br>G | -F200<br>-F201 | -S |
| | | | | L | Blank<br>G | -F200<br>-F201 | -S |
| Double wiring type[Note2] | | 6<br>8<br>Note3 | AP | J<br>M | Blank<br>G | -F200<br>-F201 | -W |
| | | | | L | Blank<br>G | -F200<br>-F201 | -W |

Notes: 1. Wiring is for the single solenoid only. Note that this is not the same as packed wiring. The mounting valves are limited to single solenoid only (**T0, T1** specifications). Therefore, even if the **T1** specification valve is switched over to a double solenoid, no power will be applied to the B side solenoid.
2. Wiring is always for the double solenoid, regardless of the specifications of the mounted valves.
3. In terms of wiring connection specifications, the number of units for single wiring is 6-16 (even numbers only) and for double wiring is 6 or 8.

## Valve specification

**T0 :** 2-position, for single solenoid only
**T1 :** 2-position, single solenoid specification
**T2 :** 2-position, double solenoid specification
**T3 :** 3-position, closed center
**T4 :** 3-position, exhaust center[Note9]
**T5 :** 3-position, pressure center[Note9]
**TA :** Tandem 3-port (NC and NC)[Note10]
**TB :** Tandem 3-port (NO and NO)[Note10]
**TC :** Tandem 3-port (NC and NO)[Note10]

## Manual override

Manual override button

Manual override lever[Note7]

## Valve outlet type

With plate[Note9] (base piping type)

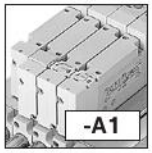


## Manifold fitting specification

### 5-port specification

| | | |
|---|---|---|
| **-J5** | With single use fitting block (base piping type) | **F10:** $\phi$4 **F15:** $\phi$6 |
| **-J6** | With single use fitting block (base piping type) | **F10:** $\phi$6 **F15:** $\phi$8 |
| **-M** | With female thread block (base piping type) | **F10:** M5 × 0.8 **F15:** Rc1/8 |

### 3-port specification

| | | |
|---|---|---|
| **-J5A** | With single use fitting block, normally closed (NC) (base piping type) | **F10:** $\phi$4 **F15:** $\phi$6 |
| **-J5B** | With single use fitting block, normally open (NO) (base piping type) | **F10:** $\phi$4 **F15:** $\phi$6 |
| **-J6A** | With single use fitting block, normally closed (NC) (base piping type) | **F10:** $\phi$6 **F15:** $\phi$8 |
| **-J6B** | With single use fitting block, normally open (NO) (base piping type) | **F10:** $\phi$6 **F15:** $\phi$8 |
| **-MA** | With female thread block, normally closed (NC) (base piping type) | **F10:** M5 × 0.8 **F15:** Rc1/8 |
| **-MB** | With female thread block, normally open (NO) (base piping type) | **F10:** M5 × 0.8 **F15:** Rc1/8 |

**Caution:** The 3-port specification is only available in the valve specification **T0**, **T1**, and **T2**.

## Wiring specification

S type plug connector
Lead wire for PC board[Note8]

## Valve size

| | |
|---|---|
| **F10** | Standard type |
| **F10L** | Low-current type |
| **F15** | Standard type |
| **F15L** | Low-current type |

Note: Valves of **F10**□ and **F15**□ cannot be mounted together.

## Operation type

**Blank**
Internal pilot type[Note5]

**G**
External pilot type[Note6] (for positive pressure)

**V**
External pilot type[Note6] (for vacuum) ※
※ : This is a vacuum valve.

Note: Cannot be mounted together with a valve for positive pressure.

## Back pressure prevention valve

| | |
|---|---|
| **Blank** | No back pressure prevention valve |
| **-E1** | With back pressure prevention valve[Note12] |

## Individual air supply and exhaust spacer, stop valve

**Blank:** No spacer and no stop valve
**-NPM :** Individual air supply spacer (with M5 female thread for F10)
**-NP6 :** Individual air supply spacer (with $\phi$6 fitting for F15)
**-NP8 :** Individual air supply spacer (with $\phi$8 fitting for F15)
**-NRM :** Individual exhaust spacer (with M5 female thread for F10)
**-NR6 :** Individual exhaust spacer (with $\phi$6 fitting for F15)
**-NR8 :** Individual exhaust spacer (with $\phi$8 fitting for F15)
**-STP :** With stop valve[Note5]
For details, see p. 23, 25.

| Station | Valve size | Valve specification | Operation type | Manual override | Valve outlet type | Wiring specification | Manifold fitting specification | Back pressure prevention valve | Individual air supply and exhaust spacer, stop valve | Voltage |
|---|---|---|---|---|---|---|---|---|---|---|
| Mounting valve model | | | | | | | | | | |
| stn. 1 : : stn.□ Note4 | F10 F10L F15 F15L | T0 T1 Note1 | Blank[Note5] G[Note6] V[Note6] | Blank -R[Note7] | -A1 Note8 | -PP Note8 | | Blank -E1[Note12] | Blank -NPM -NP6 -NP8 -NRM -NR6 -NR8 -STP Note5 | DC24V DC12V[Note13] |
| | F10 F15 | BPC (for block-off plate) | | | | | | | Blank -STP[Note5] | |
| stn. 1 : : stn.□ Note4 | F10 F10L F15 F15L | T0 T1 Note1 | Blank[Note5] G[Note6] V[Note6] | Blank -R[Note7] | -A1 Note8 | -PP Note8 | -J5 -J6 -M -J5A -J5B -J6A -J6B -MA -MB | Blank -E1[Note12] | Blank -NPM -NP6 -NP8 -NRM -NR6 -NR8 -STP Note5 | DC24V DC12V[Note13] |
| | F10 F15 | BPC (for block-off plate) | | | | | | | Blank -STP[Note5] | |
| stn. 1 : : stn.□ Note4 | F10 F10L F15 F15L | T0 T1 T2 T3 T4[Note9] T5[Note9] TA[Note10] TB[Note10] TC[Note10] | Blank[Note5] G[Note6] V[Note6] | Blank -R[Note7] | -A1 Note8 | -PP Note8 Note11 | | Blank -E1[Note12] | Blank -NPM -NP6 -NP8 -NRM -NR6 -NR8 -STP Note5 | DC24V DC12V[Note13] |
| | F10 F15 | BPC (for block-off plate) | | | | | | | Blank -STP[Note5] | |
| stn. 1 : : stn.□ Note4 | F10 F10L F15 F15L | T0 T1 T2 T3 T4[Note9] T5[Note9] TA[Note10] TB[Note10] TC[Note10] | Blank[Note5] G[Note6] V[Note6] | Blank -R[Note7] | -A1 Note8 | -PP Note8 Note11 | -J5 -J6 -M -J5A -J5B -J6A -J6B -MA -MB | Blank -E1[Note12] | Blank -NPM -NP6 -NP8 -NRM -NR6 -NR8 -STP Note5 | DC24V DC12V[Note13] |
| | F10 F15 | BPC (for block-off plate) | | | | | | | Blank -STP[Note5] | |

Notes:
4. Valve mounting location is from the left, with the solenoid on top, and the 4(A), 2(B) ports side in front.
5. Cannot be mounted on the external pilot manifold.
6. Cannot be mounted on the internal pilot manifold.
7. When the valve specification is **T1** or **T2**, the manual override lever is placed only on the A side.
8. Always enter **-A1** and **-PP**.
9. Not available in the vacuum valves.
10. Not available in external pilot type and vacuum valves.
11. The lead wire on the solenoid B side (white) is not available in valve specification **T0**.
12. Not available with the individual exhaust spacer and vacuum valve.
13. Not available in low-current type.

## Gasket (gasket and exhaust valve)

**F □ Z - GS1**

**Valve size**
**10:** 10 mm [0.394 in.] width
**15:** 15 mm [0.591 in.] width

## Block-off plate
**(block-off plate, 2 mounting screws, and housing)**

**F □ BPC**

**Valve size**
**10:** 10 mm [0.394 in.] width
**15:** 15 mm [0.591 in.] width

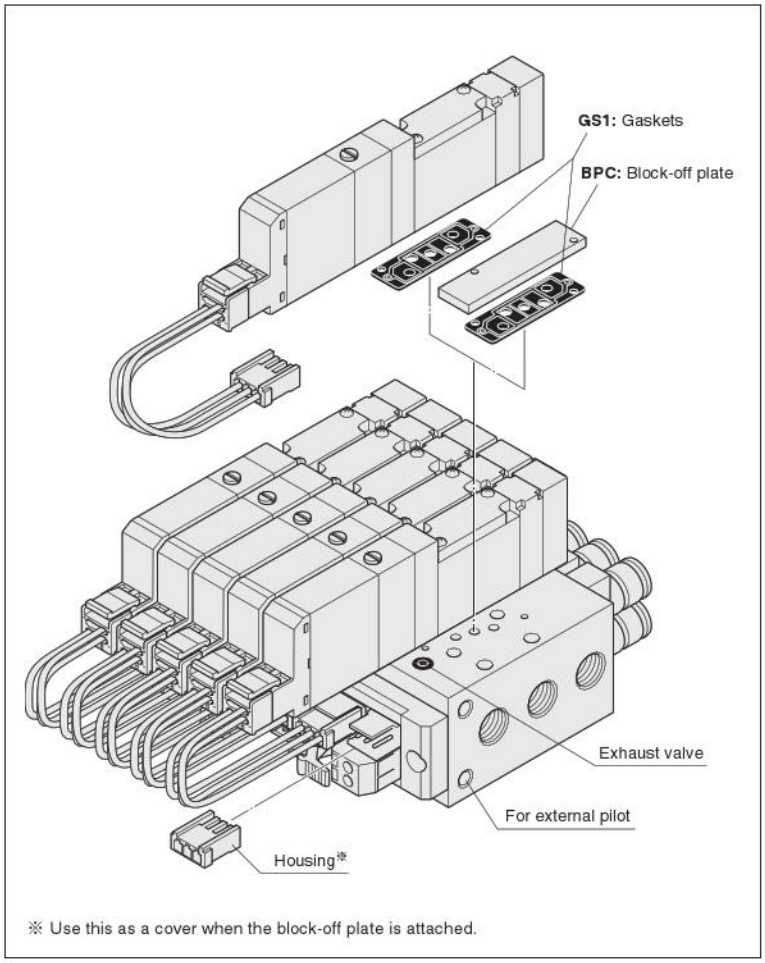


※ Use this as a cover when the block-off plate is attached.

## Connector-related order codes

**JAZ □ - □**

**Valve specification**
**Blank:** For **T1, T2, T3, T4, T5, TA, TB, TC**
**0:** For **T0**

**Connector specification**
**P10:** For F10 series
Connector lead wire for PC board manifold
**P15:** For F15 series
Connector lead wire for PC board manifold

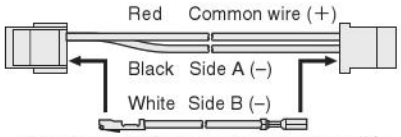


(Insert when using as a double solenoid)Note

Note: White lead wire is not available for **JAZ0-P□**.

## Back pressure prevention valve
**(for monoblock type, 2 pieces)**

**F □ Z - E1**

**Valve size**
**10:** 10 mm [0.394 in.] width
**15:** 15 mm [0.591 in.] width

## Individual air supply and exhaust spacer
**(Spacer for non-plug-in type, gasket, exhaust valve, and 2 mounting screws)**

**F □ Z - □**

**Valve size**
**10:** 10 mm [0.394 in.] width
**15:** 15 mm [0.591 in.] width

**Specification**
**NPM:** Individual air supply spacer (with M5 female thread for F10)
**NP6 :** Individual air supply spacer (with $\phi$ 6 fitting for F15)
**NP8 :** Individual air supply spacer (with $\phi$ 8 fitting for F15)
**NRM:** Individual exhaust spacer (with M5 female thread for F10)
**NR6 :** Individual exhaust spacer (with $\phi$ 6 fitting for F15)
**NR8 :** Individual exhaust spacer (with $\phi$ 8 fitting for F15)

※For details, see p. 25.

## Manifold Order Code Example
(8 units of F10 Series)

**F10M8APL-F201-W**

**stn.1～4 F10T0-A1-PP-J5 DC24V**
**stn.5～7 F10T2-A1-PP-J6 DC24V**
**stn.8 F10BPC-J6**

Note: This order code example has no relationship to the illustration at upper right.

## Muffler

**KM - J □**

**Fitting size**
**6:** Outer diameter $\phi$ 6 (for individual exhaust spacer)
**8:** Outer diameter $\phi$ 8 (for individual exhaust spacer)
(Sales unit: Set of 10 mufflers)

## Precautions for Order Codes

● **Orders for valves only**

Enter the code [Valve size] [Valve specification] [Pilot specification] [Manual override] - [Valve outlet type] - **PP** [Voltage] to order.

When the lead wire for the PC board is not required, enter **-PN.**

● **Wiring connection specification**
**-S** (single wiring): Wiring for single solenoid only.
**-W** (double wiring): Wiring is always for the double solenoid, regardless of the specifications of the mounted valve.

# F10, F15 Series PC Board Manifold F Type (Direct Piping Type) Order Codes

## Valve size

**F10M**
10 mm [0.394 in.] width

**F15M**
15 mm [0.591 in.] width

## Manual override

Manual override button

Manual override lever Note5

## Valve outlet type

### 5-port specification

| | | |
|---|---|---|
| **-FJ** | With dual use fitting block (direct piping type) | **F10:** $\phi$4, $\phi$6 **F15:** $\phi$6, $\phi$8 |
| **-FJ5** | With single use fitting block (direct piping type) | **F10:** $\phi$4 **F15:** $\phi$6 |
| **-FJ6** | With single use fitting block (direct piping type) | **F10:** $\phi$6 **F15:** $\phi$8 |
| **-FM** | With female thread block (direct piping type) | **F10:** M5×0.8 **F15:** Rc1/8 |

### 3-port specification

| | | |
|---|---|---|
| **-FJ5A** | With single use fitting block, normally closed (NC) (direct piping type) | **F10:** $\phi$4 **F15:** $\phi$6 |
| **-FJ5B** | With single use fitting block, normally open (NO) (direct piping type) | **F10:** $\phi$4 **F15:** $\phi$6 |
| **-FJ6A** | With single use fitting block, normally closed (NC) (direct piping type) | **F10:** $\phi$6 **F15:** $\phi$8 |
| **-FJ6B** | With single use fitting block, normally open (NO) (direct piping type) | **F10:** $\phi$6 **F15:** $\phi$8 |
| **-FMA** | With female thread block, normally closed (NC) (direct piping type) | **F10:** M5×0.8 **F15:** Rc1/8 |
| **-FMB** | With female thread block, normally open (NO) (direct piping type) | **F10:** M5×0.8 **F15:** Rc1/8 |

**Caution:** The 3-port specifications are only available in the valve specification **T0**, **T1**, and **T2**.

## Wiring specification (wiring block)

Flat cable connector
(with socket and strain relief)

**-F200:** 20-pin
**-F201:** 20-pin
For details, see p. 90.

## Wiring specification

S type plug connector
Lead wire for PC board

## Individual air supply and exhaust spacer, stop valve

**Blank:** No spacer and no stop valve
**-NPM :** Individual air supply spacer (with M5 female thread for F10)
**-NP6 :** Individual air supply spacer (with $\phi$6 fitting for F15)
**-NP8 :** Individual air supply spacer (with $\phi$8 fitting for F15)
**-NRM :** Individual exhaust spacer (with M5 female thread for F10)
**-NR6 :** Individual exhaust spacer (with $\phi$6 fitting for F15)
**-NR8 :** Individual exhaust spacer (with $\phi$8 fitting for F15)
**-STP :** With stop valve
For details, see p. 23, 25.

## Wiring connection specification

**-S** Single wiring Note1

**-W** Double wiring Note2

## Valve size

**F10** Standard type

**F10L** Low-current type

**F15** Standard type

**F15L** Low-current type

Note: Valves of **F10**□ and **F15**□ cannot be mounted together.

## Valve specification

**T0 :** 2-position, for single solenoid only
**T1 :** 2-position, single solenoid specification
**T2 :** 2-position, double solenoid specification
**T3 :** 3-position, closed center
**T4 :** 3-position, exhaust center
**T5 :** 3-position, pressure center
**TA :** Tandem 3-port (NC and NC)
**TB :** Tandem 3-port (NO and NO)
**TC :** Tandem 3-port (NC and NO)

## Back pressure prevention valve

**Blank** No back pressure prevention valve

**-E1** With back pressure prevention valve Note8

| | Valve size | Valve units | | Wiring specification | Wiring connection specification | Station | Valve size | Valve specification | Manual override | Valve outlet type | Wiring specification | Back pressure prevention valve | Individual air supply and exhaust spacer, stop valve | Voltage |
|---|---|---|---|---|---|---|---|---|---|---|---|---|---|---|
| | Manifold model | | | | | Mounting valve model | | | | | | | | |
| Single wiring type Note1 | F10M<br>F15M | 6<br>8<br>10<br>12<br>14<br>16<br>Note3 | FP | -F200<br>-F201 | -S | stn. 1<br>⋮<br>stn.□<br>Note4 | F10<br>F10L<br>F15<br>F15L | T0<br>T1<br>Note1 | Blank<br>-R Note5 | -FJ -FJ5B<br>-FJ5 -FJ6A<br>-FJ6 -FJ6B<br>-FM -FMA<br>-FJ5A -FMB | -PP<br>Note6 | Blank<br>-E1 Note8 | Blank<br>-NPM -NRM<br>-NP6 -NR6<br>-NP8 -NR8<br>-STP | DC24V<br>DC12V Note9 |
| | | | | | | | F10 F15 | BPC (for block-off plate) | | | | | Blank -STP | |
| Double wiring type Note2 | F10M<br>F15M | 6<br>8<br>Note3 | FP | -F200<br>-F201 | -W | stn. 1<br>⋮<br>stn.□<br>Note4 | F10<br>F10L<br>F15<br>F15L | T0 T3 TA<br>T1 T4 TB<br>T2 T5 TC | Blank<br>-R Note5 | -FJ -FJ5B<br>-FJ5 -FJ6A<br>-FJ6 -FJ6B<br>-FM -FMA<br>-FJ5A -FMB | -PP<br>Note6<br>Note7 | Blank<br>-E1 Note8 | Blank<br>-NPM -NRM<br>-NP6 -NR6<br>-NP8 -NR8<br>-STP | DC24V<br>DC12V Note9 |
| | | | | | | | F10 F15 | BPC (for block-off plate) | | | | | Blank -STP | |

Notes:
1. Wiring is for the single solenoid only. Note that this is not the same as packed wiring. The mounting valves are limited to single solenoid only (**T0, T1** specifications). Therefore, even if the **T1** specification valve is switched over to a double solenoid, no power will be applied to the B side solenoid.
2. Wiring is always for the double solenoid, regardless of the specifications of the mounted valve.
3. In terms of wiring connection specifications, the number of units for single wiring is 6-16 (even numbers only) and for double wiring is 6 or 8.
4. Valve mounting location is from the left, with the solenoid on top, and the 4(A), 2(B) ports side in front.
5. When the valve specification is **T1** or **T2**, the manual override lever is placed only on the A side.
6. Always enter **-PP**.
7. The lead wire on the solenoid B side (white) is not available in valve specification **T0**.
8. Not available with the individual exhaust spacer.
9. Not available in low-current type.

## Gasket (gasket and exhaust valve)

**F □ Z - GS1**

**Valve size**
**10:** 10 mm [0.394 in.] width
**15:** 15 mm [0.591 in.] width

## Block-off plate
**(block-off plate, 2 mounting screws, and housing)**

**F □ BPC**

**Valve size**
**10:** 10 mm [0.394 in.] width
**15:** 15 mm [0.591 in.] width

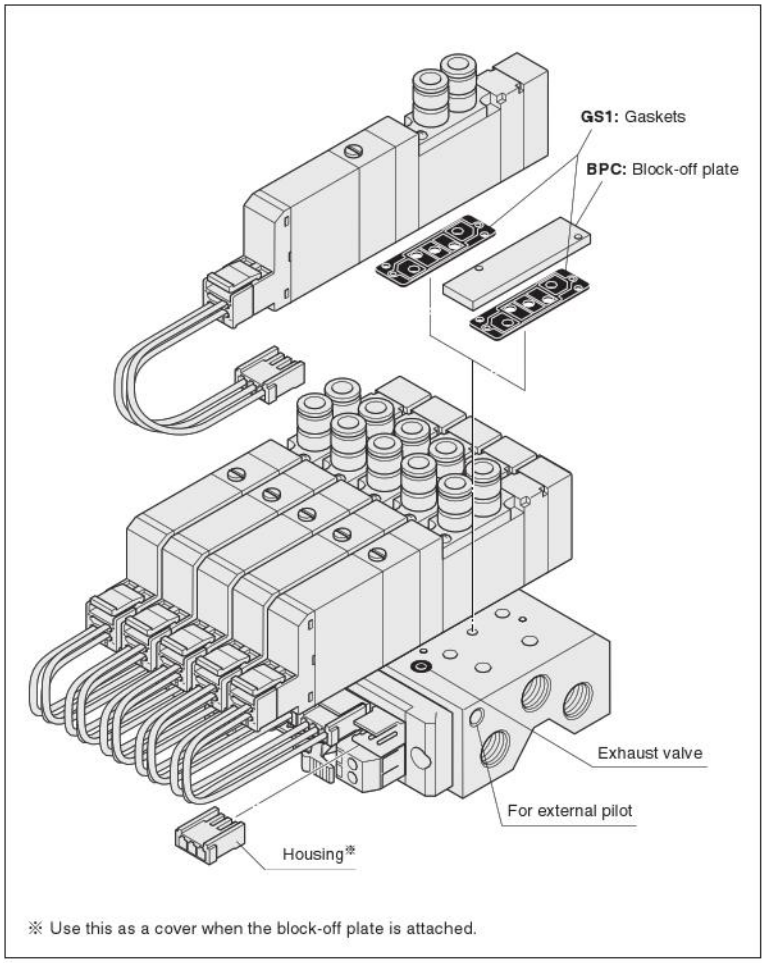


※ Use this as a cover when the block-off plate is attached.

## Connector-related order code

**JAZ □ - □**

**Valve specification**
**Blank:** For **T1, T2, T3, T4, T5, TA, TB, TC**
**0:** For **T0**

**Connector specification**
**P10:** For F10 series
Connector lead wire for PC board manifold
**P15:** For F15 series
Connector lead wire for PC board manifold

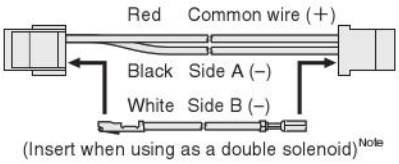


(Insert when using as a double solenoid)[Note]

Note: White lead wire is not available for **JAZ0-P□**.

## Back pressure prevention valve
**(for monoblock type, 2 pieces)**

**F □ Z - E1**

**Valve size**
**10:** 10 mm [0.394 in.] width
**15:** 15 mm [0.591 in.] width

## Individual air supply and exhaust spacer
**(Spacer for non-plug-in type, gasket, exhaust valve, and 2 mounting screws)**

**F □ Z - □**

**Valve size**
**10:** 10 mm [0.394 in.] width
**15:** 15 mm [0.591 in.] width

**Specification**
**NPM:** Individual air supply spacer (with M5 female thread for F10)
**NP6 :** Individual air supply spacer (with $\phi$ 6 fitting for F15)
**NP8 :** Individual air supply spacer (with $\phi$ 8 fitting for F15)
**NRM:** Individual exhaust spacer (with M5 female thread for F10)
**NR6 :** Individual exhaust spacer (with $\phi$ 6 fitting for F15)
**NR8 :** Individual exhaust spacer (with $\phi$ 8 fitting for F15)

※For details, see p. 25.

## Manifold Order Code Example
(8 units of F10 Series)

**F10M8FP-F201-W**

**stn.1~4 F10T0-FJ5-PP DC24V**
**stn.5~7 F10T2-FJ6-PP DC24V**
**stn.8 F10BPC**

Note: This order code example has no relationship to the illustration at upper right.

## Muffler

**KM - J □**

**Fitting size**
**6:** Outer diameter $\phi$ 6 (for individual exhaust spacer)
**8:** Outer diameter $\phi$ 8 (for individual exhaust spacer)
(Sales unit: Set of 10 mufflers)

## Precautions for Order Codes

● **Orders for valves only**

Enter the code [Valve size] [Valve specification] [Manual override] - [Valve outlet type] - **PP** [Voltage] to order.

When the lead wire for the PC board is not required, enter **-PN.**

● **Wiring connection specification**
**-S** (single wiring): Wiring for single solenoid only.
**-W** (double wiring): Wiring is always for the double solenoid, regardless of the specifications of the mounted valve.

ORDER CODES

# F10, F15 Series Split Manifold Non-Plug-in Type Order Codes

## ■ Valve size

**F10M** 10 mm [0.394 in.] width

**F15M** 15 mm [0.591 in.] width

## ■ Manifold outlet specification

With dual use fitting blocks (base piping type)

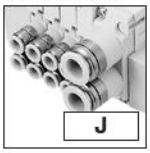


**Outlet port fitting**
**F10:** $\phi$4, $\phi$6
**F15:** $\phi$6, $\phi$8

With selectable fittings (base piping type)

**Outlet port should be selected in accordance with the manifold fitting specification.**

With female thread blocks (base piping type)

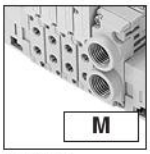


Outlet port female thread
**F10:** M5×0.8
**F15:** Rc1/8

With plates (direct piping type)

## ■ Pilot specification

**Blank**
Internal pilot manifold

**G**
External pilot manifold

## ■ Piping block specification (air supply and exhaust)

**Fitting block**
**-JR** : Dual use fitting, right-side mounting[Note11]
**-JL** : Dual use fitting, left-side mounting[Note11]
**-JD** : Dual use fitting, both-side mounting[Note11]
Fitting size (1(P), 3, 5(R) ports), $\phi$8, $\phi$10

**Female thread block**
**-MR** : Female thread, right-side mounting[Note11]
**-ML** : Female thread, left-side mounting[Note11]
**-MD** : Female thread, both-side mounting[Note11]
Female thread size (1(P), 3, 5(R) ports), Rc1/4

**Female thread block**
**-MRH** : Female thread, right-side mounting[Note12]
**-MLH** : Female thread, left-side mounting[Note12]
**-MDH** : Female thread, both-side mounting[Note12]
Female thread size (1(P), 3, 5(R) ports), NPT1/4

**Single use fitting block**
**-J5R** : Single use fitting, right-side mounting[Note11]
**-J5L** : Single use fitting, left-side mounting[Note11]
**-J5D** : Single use fitting, both-side mounting[Note11]
Fitting size (1(P), 3, 5(R) ports), $\phi$8
**-J6R** : Single use fitting, right-side mounting[Note11]
**-J6L** : Single use fitting, left-side mounting[Note11]
**-J6D** : Single use fitting, both-side mounting[Note11]
Fitting size (1(P), 3, 5(R) ports), $\phi$10

## ■ Valve size

**F10** Standard type

**F10L** Low-current type

**F15** Standard type

**F15L** Low-current type

Note: Valves of **F10**□ and **F15**□ cannot be mounted together.

| | Valve size | Valve units | Manifold type | Manifold outlet specification | Pilot specification | Piping block specification |
|---|---|---|---|---|---|---|
| | Manifold model | | | | | |
| Base piping type | F10M<br>F15M | 2<br>:<br>20 | N | J<br>M | Blank<br>G | -JR -J5R<br>-JL -J6R<br>-JD -J5L<br>-MR -J6L<br>-ML -J5D<br>-MD -J6D |
| Base piping type selectable fitting | | | N<br>NH | L | Blank<br>G | -JR[Note11] -MDH[Note12]<br>-JL[Note11] -J5R[Note11]<br>-JD[Note11] -J6R[Note11]<br>-MR[Note11] -J5L[Note11]<br>-ML[Note11] -J6L[Note11]<br>-MD[Note11] -J5D[Note11]<br>-MRH[Note12] -J6D[Note11]<br>-MLH[Note12] |
| Direct piping type | | | | Blank | Blank<br>G | -JR[Note11] -MDH[Note12]<br>-JL[Note11] -J5R[Note11]<br>-JD[Note11] -J6R[Note11]<br>-MR[Note11] -J5L[Note11]<br>-ML[Note11] -J6L[Note11]<br>-MD[Note11] -J5D[Note11]<br>-MRH[Note12] -J6D[Note11]<br>-MLH[Note12] |

Remark: Negative common specifications are also available as made to order products (add **-129W** to the ends of the valve and manifold model order codes). For details, consult us.

## Valve specification

**T0 :** 2-position, for single solenoid only
**T1 :** 2-position, single solenoid specification
**T2 :** 2-position, double solenoid specification
**T3 :** 3-position, closed center
**T4 :** 3-position, exhaust center
**T5 :** 3-position, pressure center
**TA :** Tandem 3-port (NC and NC) Note7
**TB :** Tandem 3-port (NO and NO) Note7
**TC :** Tandem 3-port (NC and NO) Note7

## Operation type

**Blank**
Internal pilot type Note5

**G**
External pilot type Note6
(for positive pressure)
※ No vacuum valve can be mounted.

## Manual override

Manual override button

Manual override lever Note2

## Valve outlet type

**-A1** With plate Note3 (base piping type)

### 5-port specification

| | | |
|---|---|---|
| **-FJ** | With dual use fitting block Note11 (direct piping type) | **F10:** $\phi$4, $\phi$6 **F15:** $\phi$6, $\phi$8 |
| **-FJ5** | With single use fitting block Note11 (direct piping type) | **F10:** $\phi$4 **F15:** $\phi$6 |
| **-FJ6** | With single use fitting block Note11 (direct piping type) | **F10:** $\phi$6 **F15:** $\phi$8 |
| **-FM** | With female thread block Note11 (direct piping type) | **F10:** M5 × 0.8 **F15:** Rc1/8 |
| **-FMH** | With female thread block Note12 (direct piping type) | **F10:** 10-32UNF **F15:** NPT1/8 |

### 3-port specification

| | | |
|---|---|---|
| **-FJ5A** | With single use fitting block, normally closed (NC) Note11 (direct piping type) | **F10:** $\phi$4 **F15:** $\phi$6 |
| **-FJ5B** | With single use fitting block, normally open (NO) Note11 (direct piping type) | **F10:** $\phi$4 **F15:** $\phi$6 |
| **-FJ6A** | With single use fitting block, normally closed (NC) Note11 (direct piping type) | **F10:** $\phi$6 **F15:** $\phi$8 |
| **-FJ6B** | With single use fitting block, normally open (NO) Note11 (direct piping type) | **F10:** $\phi$6 **F15:** $\phi$8 |
| **-FMA** | With female thread block, normally closed (NC) Note11 (direct piping type) | **F10:** M5 × 0.8 **F15:** Rc1/8 |
| **-FMAH** | With female thread block, normally closed (NC) Note12 (direct piping type) | **F10:** 10-32UNF **F15:** NPT1/8 |
| **-FMB** | With female thread block, normally open (NO) Note11 (direct piping type) | **F10:** M5 × 0.8 **F15:** Rc1/8 |
| **-FMBH** | With female thread block, normally open (NO) Note12 (direct piping type) | **F10:** 10-32UNF **F15:** NPT1/8 |

**Caution:** The 3-port specifications are only available in the valve specification **T0**, **T1**, and **T2**.

## Wiring specification

S type plug connector
Without connector

S type plug connector
Lead wire 300 mm [11.8 in.]

S type plug connector
Lead wire 3000 mm [118 in.]

Pre-wired positive common terminal
S type plug connector
Lead wire 300 mm [11.8 in.]

Pre-wired positive common terminal
S type plug connector
Lead wire 3000 mm [118 in.]

## Manifold fitting specification

### 5-port specification

| | | |
|---|---|---|
| **-J5** | With single use fitting block Note11 (base piping type) | **F10:** $\phi$4 **F15:** $\phi$6 |
| **-J6** | With single use fitting block Note11 (base piping type) | **F10:** $\phi$6 **F15:** $\phi$8 |
| **-M** | With female thread block Note11 (base piping type) | **F10:** M5 × 0.8 **F15:** Rc1/8 |
| **-MH** | With female thread block Note12 (base piping type) | **F10:** 10-32UNF **F15:** NPT1/8 |

### 3-port specification

| | | |
|---|---|---|
| **-J5A** | With single use fitting block, normally closed (NC) Note11 (base piping type) | **F10:** $\phi$4 **F15:** $\phi$6 |
| **-J5B** | With single use fitting block, normally open (NO) Note11 (base piping type) | **F10:** $\phi$4 **F15:** $\phi$6 |
| **-J6A** | With single use fitting block, normally closed (NC) Note11 (base piping type) | **F10:** $\phi$6 **F15:** $\phi$8 |
| **-J6B** | With single use fitting block, normally open (NO) Note11 (base piping type) | **F10:** $\phi$6 **F15:** $\phi$8 |
| **-MA** | With female thread block, normally closed (NC) Note11 (base piping type) | **F10:** M5 × 0.8 **F15:** Rc1/8 |
| **-MAH** | With female thread block, normally closed (NC) Note12 (base piping type) | **F10:** 10-32UNF **F15:** NPT1/8 |
| **-MB** | With female thread block, normally open (NO) Note11 (base piping type) | **F10:** M5 × 0.8 **F15:** Rc1/8 |
| **-MBH** | With female thread block, normally open (NO) Note12 (base piping type) | **F10:** 10-32UNF **F15:** NPT1/8 |

**Caution:** The 3-port specifications are only available in the valve specification **T0**, **T1**, and **T2**.

## Port isolator

**Blank :** No port isolator
**-SP :** For 1(P) port Note4
**-SR :** For 3(R2), 5(R1) ports Note4
**-SA :** For 1(P), 3(R2), and 5(R1) ports Note4

## Back pressure prevention valve

**Blank**
No back pressure prevention valve

**-E2**
With back pressure prevention valve Note8

## Individual air supply and exhaust spacer

**Blank :** No spacer
**-NPM :** Individual air supply spacer (with M5 female thread for F10)
**-NP6 :** Individual air supply spacer (with $\phi$6 fitting for F15)
**-NP8 :** Individual air supply spacer (with $\phi$8 fitting for F15)
**-NRM :** Individual exhaust spacer (with M5 female thread for F10)
**-NR6 :** Individual exhaust spacer (with $\phi$6 fitting for F15)
**-NR8 :** Individual exhaust spacer (with $\phi$8 fitting for F15)
For details, see p. 25.

| Station | Valve size | Valve specification | Operation type | IP specification | Manual override | Valve outlet type | Wiring specification | Manifold fitting specification | Back pressure prevention valve | Individual air supply and exhaust spacer | Port isolator | Voltage |
|---|---|---|---|---|---|---|---|---|---|---|---|---|
| Mounting valve model | | | | | | | | | | | | |
| stn. 1 : : stn.□ Note1 | F10 F10L F15 F15L | T0 T1 T2 T3 T4 T5 TA Note7 TB Note7 TC Note7 | Blank Note5 G Note6 | Blank -P Note13 | Blank -R Note2 | -A1 Note3 | -PN -PS -PS3 -CPS -CPS3 | | Blank -E2 Note8 | Blank -NPM -NRM -NP6 -NR6 -NP8 -NR8 | Blank -SP Note4 -SR Note4 -SA Note4 | DC24V DC12V Note9 AC100V Note10 AC120V Note10 |
| | F10 F15 | BPN (for block-off plate) | | | | | | | | | | |
| stn. 1 : : stn.□ Note1 | F10 F10L F15 F15L | T0 T1 T2 T3 T4 T5 TA Note7 TB Note7 TC Note7 | Blank Note5 G Note6 | Blank -P Note13 | Blank -R Note2 | -A1 Note3 | -PN -PS -PS3 -CPS -CPS3 | -J5 Note11 -J6A Note11 -J6 Note11 -J6B Note11 -M Note11 -MA Note11 -MH Note12 -MAH Note12 -J5A Note11 -MB Note11 -J5B Note11 -MBH Note12 | Blank -E2 Note8 | Blank -NPM -NRM -NP6 -NR6 -NP8 -NR8 | Blank -SP Note4 -SR Note4 -SA Note4 | DC24V DC12V Note9 AC100V Note10 AC120V Note10 |
| | F10 F15 | BPN (for block-off plate) | | | | | | | | | | |
| stn. 1 : : stn.□ Note1 | F10 F10L F15 F15L | T0 T1 T2 T3 T4 T5 TA Note7 TB Note7 TC Note7 | Blank Note5 G Note6 | Blank -P Note13 | Blank -R Note2 | -FJ Note11 -FJ6A Note11 -FJ5 Note11 -FJ6B Note11 -FJ6 Note11 -FMA Note11 -FM Note11 -FMAH Note12 -FMH Note12 -FMB Note11 -FJ5A Note11 -FMBH Note12 -FJ5B Note11 | -PN -PS -PS3 -CPS -CPS3 | | Blank -E2 Note8 | Blank -NPM -NRM -NP6 -NR6 -NP8 -NR8 | Blank -SP Note4 -SR Note4 -SA Note4 | DC24V DC12V Note9 AC100V Note10 AC120V Note10 |
| | F10 F15 | BPN (for block-off plate) | | | | | | | | | | |

Notes:
1. Valve mounting location is from the left, with the solenoid on top, and the 4(A), 2(B) ports side in front.
2. When the valve specification is **T1** or **T2**, the manual override lever is placed only on the A side.
3. When selecting **J, M,** or **L** (base piping type) for the manifold outlet specification, always enter **-A1** (with plate) for the valve outlet type.
4. Port isolators can be installed only when piping blocks are mounted on both sides. In addition, only 1 port isolator can be mounted in 1 manifold for **-SA**, or 1 each port isolator for **-SP** and **-SR** for a total of 2 locations. When shipping, the designated port isolators are mounted between the designated station and the station to its immediate left (the next smaller stn. No.).
5. Cannot be mounted on the external pilot manifold.
6. Cannot be mounted on the internal pilot manifold.
7. Not available in external pilot type.
8. Not available with the individual exhaust spacer.
9. Not available in low-current type.
10. Not available in low-current type and tandem 3-port valves.
11. Can be selected only when the manifold type is **N**.
12. Can be selected only when the manifold type is **NH**.
13. IP65 compliant protective construction to protect against intrusion of dust and water from outside.

## Parts for manifold

**F □ Z - □**

**Valve size**
**10:** 10 mm [0.394 in.] width
**15:** 15 mm [0.591 in.] width

**Parts content**
**GS2 :** Gasket (gasket and exhaust valve)
**SP :** Port isolator (for 1(P) port)
**SR :** Port isolator (for 3(R2), 5(R1) ports)
**SA :** Port isolator (for 1(P), 3(R2), 5(R1) ports)

## Block-off plate (block-off plate, 2 mounting screws, and plug)

**F □ BP N**

**Valve size**
**10:** 10 mm [0.394 in.] width
**15:** 15 mm [0.591 in.] width

**For non-plug-in type**

## Connector-related order codes

※For details, see p. 19.

**JAZ □ - □**

300 mm = 11.8 in.
1500 mm = 59 in.
3000 mm = 118 in.

**Valve specification**
**Blank:** For **T1, T2, T3, T4, T5, TA, TB, TC**
**0:** For **T0**

**Connector specification**
**CP :** Connector, lead wire length 300 mm
**CP3 :** Connector, lead wire length 3000 mm
**CPN :** Connector without lead wire (short bar, contacts included)
**PA :** Positive common A type, lead wire length 300 mm ※
**PA3 :** Positive common A type, lead wire length 3000 mm ※
**PB :** Positive common B type, lead wire length 300 mm ※
**PB3 :** Positive common B type, lead wire length 3000 mm ※
**PC :** Positive common C type, lead wire length 300 mm ※
**PC3 :** Positive common C type, lead wire length 3000 mm ※

**FZ - □**

**Valve specification**
For **T1, T2, T3, T4, T5, TA, TB, TC**

**Connector specification**
**CC1.5 :** Cabtyre cable, length 1500 mm ※
**CC3 :** Cabtyre cable, length 3000 mm ※

### ● Common connector assembly

**A Type: JAZ-PA □※**

Red Common wire (+)
Black A side (−)
White B side (−) (Insert when using as double solenoid) Note

**B Type: JAZ-PB □※**

Red Common wire (+)
Black A side (−)
White B side (−) (Insert when using as double solenoid) Note

**C Type: JAZ-PC □※**

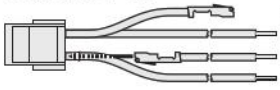

Red Common wire (+)
Black A side (−)
White B side (−) (Insert when using as double solenoid) Note
Red Common wire (+)

※ Lead wire length **Blank:** 300 mm [11.8 in.]
**3:** 3000 mm [118 in.]

Note: White lead wire is not available with **JAZ0-P□□**.

Remark: Connector for negative common type also available. For details, see p. 19.

## Valve base assembly (valve base and gasket)

**F □ Z □ - □**

**Valve size**
**10:** 10 mm [0.394 in.] width
**15:** 15 mm [0.591 in.] width

**Pilot specification**
**Blank :** Internal pilot
**G :** External pilot

**Piping specification**
**VJ :** Dual use fitting valve base
**VJ5 :** Single use fitting valve base F10: $\phi$4, F15: $\phi$6
**VJ6 :** Single use fitting valve base F10: $\phi$6, F15: $\phi$8
**VJ5A :** 3-port specification normally closed, single use fitting valve base F10: $\phi$4, F15: $\phi$6
**VJ5B :** 3-port specification normally open, single use fitting valve base F10: $\phi$4, F15: $\phi$6
**VJ6A :** 3-port specification normally closed, single use fitting valve base F10: $\phi$6, F15: $\phi$8
**VJ6B :** 3-port specification normally open, single use fitting valve base F10: $\phi$6, F15: $\phi$8
**VM :** Female thread valve base F10: M5 × 0.8, F15: Rc1/8
**VMA :** 3-port specification normally closed, female thread valve base F10: M5 × 0.8, F15: Rc1/8
**VMB :** 3-port specification normally open, female thread valve base F10: M5 × 0.8, F15: Rc1/8
**VMH :** Female thread valve base F10: 10-32UNF, F15:NPT1/8
**VMAH :** 3-port specification normally closed, female thread valve base F10: 10-32UNF, F15: NPT1/8
**VMBH :** 3-port specification normally open, female thread valve base F10: 10-32UNF, F15: NPT1/8
**VP :** Valve base plate

## Piping block assembly

**F □ Z □ - □**

**Valve size**
**10:** 10 mm [0.394 in.] width
**15:** 15 mm [0.591 in.] width

**Piping specification**
**PJ :** Dual use fitting piping block
**PJ5 :** Single use fitting piping block $\phi$8
**PJ6 :** Single use fitting piping block $\phi$10
**PM :** Female thread piping block Rc1/4
**PMH :** Female thread piping block NPT1/4

**Pilot specification**
**Blank :** Internal pilot
**G :** External pilot

## End blocks (one set of left and right)

**F □ Z □ - E**

**Valve size**
**10:** 10 mm [0.394 in.] width
**15:** 15 mm [0.591 in.] width

**Pilot specification**
**Blank :** Internal pilot
**G :** External pilot

## Back pressure prevention valve

**(2 pieces for split type, with dedicated gasket)**

**F □ Z - E2**

**Valve size**
**10:** 10 mm [0.394 in.] width
**15:** 15 mm [0.591 in.] width

## Individual air supply and exhaust spacer (Spacer for non-plug-in type, gasket, exhaust valve, and 2 mounting screws)

**F □ Z - □**

**Valve size**
**10:** 10 mm [0.394 in.] width
**15:** 15 mm [0.591 in.] width

**Specification**
**NPM :** Individual air supply spacer (with M5 female thread for F10)
**NP6 :** Individual air supply spacer (with $\phi$6 fitting for F15)
**NP8 :** Individual air supply spacer (with $\phi$8 fitting for F15)
**NRM :** Individual exhaust spacer (with M5 female thread for F10)
**NR6 :** Individual exhaust spacer (with $\phi$6 fitting for F15)
**NR8 :** Individual exhaust spacer (with $\phi$8 fitting for F15)

※For details, see p. 25.

## Muffler

**KM - J □**

**Fitting size**
**6:** Outer diameter $\phi$6 (for individual exhaust spacer)
**8:** Outer diameter $\phi$8 (for individual exhaust spacer)
**10:** Outer diameter $\phi$10
(Sales unit: Set of 10 mufflers)

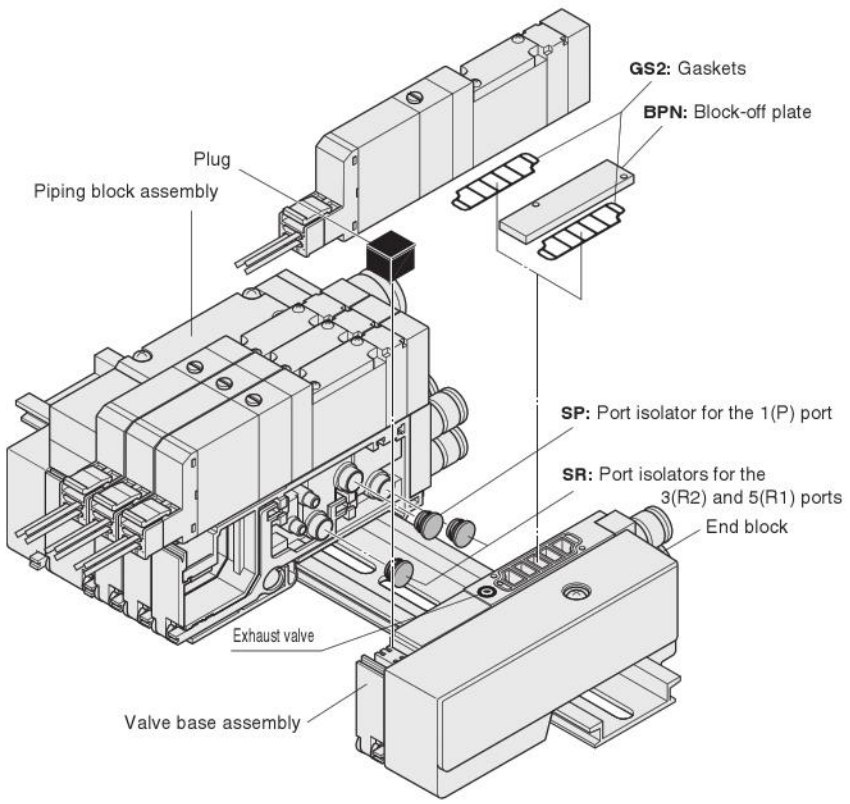


※Illustration shows the F10 series.

## Manifold Order Code Example

(4 units of F10 Series)

**F10M4NL-J5R**

| | |
|---|---|
| **stn.1～2** | **F10T0-A1-PS-J5 DC24V** |
| **stn.3** | **F10T2-A1-PS-J6 DC24V** |
| **stn.4** | **F10BPN-J6** |

Note: This order code example has no relationship to the illustration above.

## Precautions for Order Codes

● **Orders for valves only**

Place orders from "Single Valve Unit Order Codes" on p. 44.
However, **Blank, A2□, F3, F4□, F5, F6, F4A□, F4B□, F5A, F5B, F6A,** and **F6B** cannot be selected for the valve outlet type. And for the wiring specification, **Blank, PL**, and **PL3** cannot be selected. In addition, for common terminal wiring connections, separately order the common connector assemblies listed on the previous page.

# F10, F15 Series Split Manifold Plug-in Type Order Codes

## ■ Manifold outlet specification

With dual use fitting blocks (base piping type)

**Outlet port fitting**
**F10:** $\phi$4, $\phi$6
**F15:** $\phi$6, $\phi$8

With selectable fittings (base piping type)

**Outlet port should be selected in accordance with the manifold fitting specification.**

With female thread blocks (base piping type)

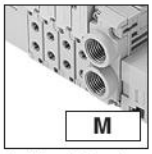


**Outlet port female thread**
**F10:** M5 × 0.8
**F15:** Rc1/8

With plates (direct piping type)

## ■ Pilot specification

**Blank**
Internal pilot manifold

**G**
External pilot manifold

## ■ Piping block specification (air supply and exhaust)

**Fitting block**
**-JR** : Dual use fitting, right-side mounting[Note14]
**-JL** : Dual use fitting, left-side mounting[Note14]
**-JD** : Dual use fitting, both-side mounting[Note14]
Fitting size (1(P), 3, 5(R) ports), $\phi$8, $\phi$10

**Female thread block**
**-MR** : Female thread, right-side mounting[Note14]
**-ML** : Female thread, left-side mounting[Note14]
**-MD** : Female thread, both-side mounting[Note14]
Female thread size (1(P), 3, 5(R) ports), Rc1/4

**Female thread block**
**-MRH** : Female thread, right-side mounting[Note15]
**-MLH** : Female thread, left-side mounting[Note15]
**-MDH** : Female thread, both-side mounting[Note15]
Female thread size (1(P), 3, 5(R) ports), NPT1/4

**Single size fitting block**
**-J5R** : Single use fitting, right-side mounting[Note14]
**-J5L** : Single use fitting, left-side mounting[Note14]
**-J5D** : Single use fitting, both-side mounting[Note14]
Fitting size (1(P), 3, 5(R) ports), $\phi$8
**-J6R** : Single use fitting, right-side mounting[Note14]
**-J6L** : Single use fitting, left-side mounting[Note14]
**-J6D** : Single use fitting, both-side mounting[Note14]
Fitting size (1(P), 3, 5(R) ports), $\phi$10

## ■ Wiring specification (wiring block)

Flat cable connector (with socket and strain relief)

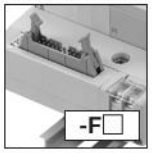

<Connector top surface wiring>
**-F100** : 10-pin
**-F100N**: 10-pin without power terminal
**-F101** : 10-pin
**-F101N**: 10-pin without power terminal
**-F200** : 20-pin
**-F200N**: 20-pin without power terminal
**-F201** : 20-pin
**-F201N**: 20-pin without power terminal
**-F260** : 26-pin
**-F260N**: 26-pin without power terminal

<Connector side surface wiring>
**-F100E** : 10-pin
**-F100EN** : 10-pin without power terminal
**-F101E** : 10-pin
**-F101EN** : 10-pin without power terminal
**-F200E** : 20-pin
**-F200EN** : 20-pin without power terminal
**-F201E** : 20-pin
**-F201EN** : 20-pin without power terminal
**-F260E** : 26-pin
**-F260EN** : 26-pin without power terminal

For details, see p. 92.

D-sub connector

<Connector top surface wiring>
(M2.6 mounting screws)
**-D250** : 25-pin[Note14]
**-D250N** : 25-pin without power terminal[Note14]
**-D251** : 25-pin[Note14]
**-D251N** : 25-pin without power terminal[Note14]
(4-40 UNC mounting screws)
**-D250U** : 25-pin[Note15]
**-D251U** : 25-pin[Note15]
**-D370NU** : 37-pin without power terminal[Note15]

<Connector side surface wiring>
(M2.6 mounting screws)
**-D250E** : 25-pin[Note14]
**-D250EN** : 25-pin without power terminal[Note14]
**-D251E** : 25-pin[Note14]
**-D251EN** : 25-pin without power terminal[Note14]
(4-40 UNC mounting screws)
**-D250EU** : 25-pin[Note15]
**-D251EU** : 25-pin[Note15]

For details, see p. 92-96.

Terminal block (19 terminals, M3 screws)

Also can provide the terminal block with cover.[Note4]

For details, see p. 92-96.

## ■ Wiring connection specification

**Blank**
**Packed wiring:**
Wiring is made in accordance with the mounted valve specifications.

**-W**
**Double wiring:**
Wiring is always for the double solenoid, regardless of the specifications of the mounted valve.

## ■ Wiring position (wiring block)

**Blank** : Left-side mounting
**-R** : Right-side mounting

## ■ Valve size

**F10M** 10 mm [0.394 in.] width

**F15M** 15 mm [0.591 in.] width

## ■ Valve size

**F10** Standard type

**F10L** Low-current type

**F15** Standard type

**F15L** Low-current type

Note: Valves of **F10□** and **F15□** cannot be mounted together.

| Valve size | Valve units | Manifold type | Manifold outlet specification | Pilot specification | Piping block specification | Wiring specification | Wiring connection specification | Wiring position | Voltage |
|---|---|---|---|---|---|---|---|---|---|
| Manifold model | | | | | | | | | |
| Base piping type | F10M<br>F15M | 2<br>⋮<br>□<br>Note1 | P | J<br>M | Blank<br>G | -JR -J5R<br>-JL -J6R<br>-JD -J5L<br>-MR -J6L<br>-ML -J5D<br>-MD -J6D | -F100 -F201 -D251 -F200E -D250E<br>-F100N -F201N -D251N -F200EN -D250EN<br>-F101 -F260 -F100E -F201E -D251E<br>-F101N -F260N -F100EN -F201EN -D251EN<br>-F200 -D250 -F101E -F260E -T200<br>-F200N -D250N -F101EN -F260EN | Blank<br>-W | Blank<br>-R | DC24V<br>DC12V[Note2]<br>AC100V[Note3]<br>AC120V[Note3] |
| Base piping type selectable fitting | | | P | L | Blank<br>G | -JR[Note14] -MDH[Note15]<br>-JL[Note14] -J5R[Note14]<br>-JD[Note14] -J6R[Note14]<br>-MR[Note14] -J5L[Note14]<br>-ML[Note14] -J6L[Note14]<br>-MD[Note14] -J5D[Note14]<br>-MRH[Note15] -J6D[Note14]<br>-MLH[Note15] | -F100 -F201N -D250U[Note15] -F200E -D250EN[Note14]<br>-F100N -F260 -D251U[Note15] -F200EN -D251E[Note14]<br>-F101 -F260N -D370NU[Note15] -F201E -D251EN[Note14]<br>-F101N -D250[Note14] -F100E -F201EN -D250EU[Note15]<br>-F200 -D250N[Note14] -F100EN -F260E -D251EU[Note15]<br>-F200N -D251[Note14] -F101E -F260EN -T200<br>-F201 -D251N[Note14] -F101EN -D250E[Note14] | Blank<br>-W | Blank<br>-R | DC24V<br>DC12V[Note2]<br>AC100V[Note3]<br>AC120V[Note3] |
| Direct piping type | | | PH | Blank | Blank<br>G | -JR[Note14] -MDH[Note15]<br>-JL[Note14] -J5R[Note14]<br>-JD[Note14] -J6R[Note14]<br>-MR[Note14] -J5L[Note14]<br>-ML[Note14] -J6L[Note14]<br>-MD[Note14] -J5D[Note14]<br>-MRH[Note15] -J6D[Note14]<br>-MLH[Note15] | -F100 -F201N -D250U[Note15] -F200E -D250EN[Note14]<br>-F100N -F260 -D251U[Note15] -F200EN -D251E[Note14]<br>-F101 -F260N -D370NU[Note15] -F201E -D251EN[Note14]<br>-F101N -D250[Note14] -F100E -F201EN -D250EU[Note15]<br>-F200 -D250N[Note14] -F100EN -F260E -D251EU[Note15]<br>-F200N -D251[Note14] -F101E -F260EN -T200<br>-F201 -D251N[Note14] -F101EN -D250E[Note14] | Blank<br>-W | Blank<br>-R | DC24V<br>DC12V[Note2]<br>AC100V[Note3]<br>AC120V[Note3] |

Notes: 1. For the maximum number of units, see the table for maximum number of valve units by wiring specification, on p. 66.
2. Not available in low-current type.
3. AC100V is available only for the **-D250□**, **-D251□**, **-D370NU** (D-sub connector) and **-T200** (terminal block) wiring specifications. In addition, not available in low-current type and tandem 3-port valves.
4. The terminal block with cover is also available as a made to order product (add **-139W** to the end of the manifold model order code). For details, consult us.

Remark: Negative common specifications are also available as made to order products (add **-129W** to the ends of the valve and manifold model order codes). For details, consult us.

## Valve specification

**T0 :** 2-position, for single solenoid only
**T1 :** 2-position, single solenoid specification
**T2 :** 2-position, double solenoid specification
**T3 :** 3-position, closed center
**T4 :** 3-position, exhaust center
**T5 :** 3-position, pressure center
**TA :** Tandem 3-port (NC and NC)[Note12]
**TB :** Tandem 3-port (NO and NO)[Note12]
**TC :** Tandem 3-port (NC and NO)[Note12]

## Operation type

**Blank**
Internal pilot type[Note10]

**G**
External pilot type[Note11]
(for positive pressure)
※ No vacuum valve can be mounted.

## Manual override

Manual override button

Manual override lever[Note8]

## Valve outlet type

**-A1** With plate[Note6] (base piping type)

### 5-port specification

**-FJ** With dual use fitting block[Note14] (direct piping type) **F10:** $\phi$4, $\phi$6 **F15:** $\phi$6, $\phi$8

**-FJ5** With single use fitting block[Note14] (direct piping type) **F10:** $\phi$4 **F15:** $\phi$6

**-FJ6** With single use fitting block[Note14] (direct piping type) **F10:** $\phi$6 **F15:** $\phi$8

**-FM** With female thread block[Note14] (direct piping type) **F10:** M5 × 0.8 **F15:** Rc1/8

**-FMH** With female thread block[Note15] (direct piping type) **F10:** 10-32UNF **F15:** NPT1/8

### 3-port specification

**-FJ5A** With single use fitting block, normally closed (NC)[Note14] (direct piping type) **F10:** $\phi$4 **F15:** $\phi$6

**-FJ5B** With single use fitting block, normally open (NO)[Note14] (direct piping type) **F10:** $\phi$4 **F15:** $\phi$6

**-FJ6A** With single use fitting block, normally closed (NC)[Note14] (direct piping type) **F10:** $\phi$6 **F15:** $\phi$8

**-FJ6B** With single use fitting block, normally open (NO)[Note14] (direct piping type) **F10:** $\phi$6 **F15:** $\phi$8

**-FMA** With female thread block, normally closed (NC)[Note14] (direct piping type) **F10:** M5 × 0.8 **F15:** Rc1/8

**-FMAH** With female thread block, normally closed (NC)[Note15] (direct piping type) **F10:** 10-32UNF **F15:** NPT1/8

**-FMB** With female thread block, normally open (NO)[Note14] (direct piping type) **F10:** M5 × 0.8 **F15:** Rc1/8

**-FMBH** With female thread block, normally open (NO)[Note15] (direct piping type) **F10:** 10-32UNF **F15:** NPT1/8

**Caution:** The 3-port specifications are only available in the valve specification **T0**, **T1**, and **T2**.

## Manifold fitting specification

### 5-port specification

**-J5** With single use fitting block[Note14] (base piping type) **F10:** $\phi$4 **F15:** $\phi$6

**-J6** With single use fitting block[Note14] (base piping type) **F10:** $\phi$6 **F15:** $\phi$8

**-M** With female thread block[Note14] (base piping type) **F10:** M5 × 0.8 **F15:** Rc1/8

**-MH** With female thread block[Note15] (base piping type) **F10:** 10-32UNF **F15:** NPT1/8

### 3-port specification

**-J5A** With single use fitting block, normally closed (NC)[Note14] (base piping type) **F10:** $\phi$4 **F15:** $\phi$6

**-J5B** With single use fitting block, normally open (NO)[Note14] (base piping type) **F10:** $\phi$4 **F15:** $\phi$6

**-J6A** With single use fitting block, normally closed (NC)[Note14] (base piping type) **F10:** $\phi$6 **F15:** $\phi$8

**-J6B** With single use fitting block, normally open (NO)[Note14] (base piping type) **F10:** $\phi$6 **F15:** $\phi$8

**-MA** With female thread block, normally closed (NC)[Note14] (base piping type) **F10:** M5 × 0.8 **F15:** Rc1/8

**-MAH** With female thread block, normally closed (NC)[Note15] (base piping type) **F10:** 10-32UNF **F15:** NPT1/8

**-MB** With female thread block, normally open (NO)[Note14] (base piping type) **F10:** M5 × 0.8 **F15:** Rc1/8

**-MBH** With female thread block, normally open (NO)[Note15] (base piping type) **F10:** 10-32UNF **F15:** NPT1/8

**Caution:** The 3-port specifications are only available in the valve specification **T0**, **T1**, and **T2**.

## Port isolator

**Blank :** No port isolator
**-SP :** For 1(P) port[Note9]
**-SR :** For 3(R2), 5(R1) ports[Note9]
**-SA :** For 1(P), 3(R2), and 5(R1) ports[Note9]

## Back pressure prevention valve

**Blank**
No back pressure prevention valve

**-E2**
With back pressure prevention valve[Note13]

## Individual air supply and exhaust spacer

**Blank :** No spacer
**-PPM :** Individual air supply spacer (with M5 female thread for F10)
**-PP6 :** Individual air supply spacer (with $\phi$6 fitting for F15)
**-PP8 :** Individual air supply spacer (with $\phi$8 fitting for F15)
**-PRM :** Individual exhaust spacer (with M5 female thread for F10)
**-PR6 :** Individual exhaust spacer (with $\phi$6 fitting for F15)
**-PR8 :** Individual exhaust spacer (with $\phi$8 fitting for F15)
For details, see p. 25.

| Station | Valve size | Valve specification | Operation type | Manual override | Valve outlet type | Manifold fitting specification | Back pressure prevention valve | Individual air supply and exhaust spacer | Port isolator | Voltage |
|---|---|---|---|---|---|---|---|---|---|---|
| Mounting valve model | | | | | | | | | | |
| stn. 1 · · stn.□ Note5 | F10 F10L F15 F15L | T0 T3 TA[Note12] T1 T4 TB[Note12] T2 T5 TC[Note12] | Blank[Note10] G[Note11] | Blank -R[Note8] | -A1[Note6] | | Blank -E2[Note13] | Blank -PPM -PRM -PP6 -PR6 -PP8 -PR8 | Blank -SP[Note9] -SR[Note9] -SA[Note9] | DC24V DC12V[Note2] AC100V[Note3] AC120V[Note3] |
| | F10 F15 | BPP (for block-off plate)[Note7] | | | | | | | | |
| stn. 1 · · stn.□ Note5 | F10 F10L F15 F15L | T0 T3 TA[Note12] T1 T4 TB[Note12] T2 T5 TC[Note12] | Blank[Note10] G[Note11] | Blank -R[Note8] | -A1[Note6] | -J5[Note14] -J6[Note14] -M[Note14] -MH[Note15] -J5A[Note14] -J5B[Note14] -J6A[Note14] -J6B[Note14] -MA[Note14] -MAH[Note15] -MB[Note14] -MBH[Note15] | Blank -E2[Note13] | Blank -PPM -PRM -PP6 -PR6 -PP8 -PR8 | Blank -SP[Note9] -SR[Note9] -SA[Note9] | DC24V DC12V[Note2] AC100V[Note3] AC120V[Note3] |
| | F10 F15 | BPP (for block-off plate)[Note7] | | | | | | | | |
| stn. 1 · · stn.□ Note5 | F10 F10L F15 F15L | T0 T3 TA[Note12] T1 T4 TB[Note12] T2 T5 TC[Note12] | Blank[Note10] G[Note11] | Blank -R[Note8] | -FJ[Note14] -FJ5[Note14] -FJ6[Note14] -FM[Note14] -FMH[Note15] -FJ5A[Note14] -FJ5B[Note14] -FJ6A[Note14] -FJ6B[Note14] -FMA[Note14] -FMAH[Note15] -FMB[Note14] -FMBH[Note15] | | Blank -E2[Note13] | Blank -PPM -PRM -PP6 -PR6 -PP8 -PR8 | Blank -SP[Note9] -SR[Note9] -SA[Note9] | DC24V DC12V[Note2] AC100V[Note3] AC120V[Note3] |
| | F10 F15 | BPP (for block-off plate)[Note7] | | | | | | | | |

Notes:
5. Valve mounting location is from the left, with the solenoid on top, and the 4(A), 2(B) ports side in front.
6. When selecting **J**, **M**, or **L** (base piping type) for the manifold outlet specification, always enter **-A1** (with plate) for the valve outlet type.
7. Caution should be exercised that the block-off plate wiring is always double wiring (allocated 2 control pins at 1 stn.), regardless of the wiring connection specification. For wiring for a single solenoid, see p. 67.
8. When the valve specification is **T1** or **T2**, the manual override lever is placed only on the A side.
9. Port isolators can be installed only when piping blocks are mounted on both sides. In addition, only 1 port isolator can be mounted in 1 manifold for **-SA**, or 1 each port isolator for **-SP** and **-SR** for a total of 2 locations. When shipping, the designated port isolators are mounted between the designated station and the station to its immediate left (the next smaller stn. No.).
10. Cannot be mounted on the external pilot manifold.
11. Cannot be mounted on the internal pilot manifold.
12. Not available in external pilot type.
13. Not available with the individual exhaust spacer.
14. Can be selected only when the manifold type is **P**.
15. Can be selected only when the manifold type is **PH**.

## Parts for manifold

F □ Z - □

**Valve size**
**10:** 10 mm [0.394 in.] width
**15:** 15 mm [0.591 in.] width

**Parts content**
**GS2 :** Gasket (gasket and exhaust valve)
**SP :** Port isolator (for 1(P) port)
**SR :** Port isolator (for 3(R2), 5(R1) ports)
**SA :** Port isolator (for 1(P), 3(R2), 5(R1) ports)

## Block-off plate (block-off plate, 2 mounting screws, and plug)

F □ BP P

**Valve size**
**10:** 10 mm [0.394 in.] width
**15:** 15 mm [0.591 in.] width

**For plug-in type**

## Valve base assembly (valve base, gasket, lead wire, and plug-in connector)

F □ Z □ - □ - □

**Valve size**
**10:** 10 mm [0.394 in.] width
**15:** 15 mm [0.591 in.] width

**Pilot specification**
**Blank :** Internal pilot
**G :** External pilot

**Piping specification**
**VJ :** Dual use fitting valve base
**VJ5 :** Single use fitting valve base F10: $\phi$4, F15: $\phi$6
**VJ6 :** Single use fitting valve base F10: $\phi$6, F15: $\phi$8
**VJ5A :** 3-port specification normally closed, single use fitting valve base F10: $\phi$4, F15: $\phi$6
**VJ5B :** 3-port specification normally open, single use fitting valve base F10: $\phi$4, F15: $\phi$6
**VJ6A :** 3-port specification normally closed, single use fitting valve base F10: $\phi$6, F15: $\phi$8
**VJ6B :** 3-port specification normally open, single use fitting valve base F10: $\phi$6, F15: $\phi$8
**VM :** Female thread valve base F10: M5 × 0.8, F15: Rc1/8
**VMA :** 3-port specification normally closed, female thread valve base F10: M5 × 0.8, F15: Rc1/8
**VMB :** 3-port specification normally open, female thread valve base F10: M5 × 0.8, F15: Rc1/8
**VMH :** Female thread valve base F10: 10-32UNF, F15: NPT1/8
**VMAH :** 3-port specification normally closed, female thread valve base F10: 10-32UNF, F15: NPT1/8
**VMBH :** 3-port specification normally open, female thread valve base F10: 10-32UNF, F15: NPT1/8
**VP :** Valve base plate

**Wiring specification**
**D :** For D-sub connector
**F :** For flat cable connector, terminal block

## Piping block assembly

F □ Z □ - □

**Valve size**
**10:** 10 mm [0.394 in.] width
**15:** 15 mm [0.591 in.] width

**Pilot specification**
**Blank :** Internal pilot
**G :** External pilot

**Piping specification**
**PJ :** Dual use fitting piping block
**PJ5 :** Single use fitting piping block $\phi$8
**PJ6 :** Single use fitting piping block $\phi$10
**PM :** Female thread piping block Rc1/4
**PMH :** Female thread piping block NPT1/4

## End blocks (one set of left and right)

F □ Z □ - □

**Valve size**
**10:** 10 mm [0.394 in.] width
**15:** 15 mm [0.591 in.] width

**Pilot specification**
**Blank :** Internal pilot
**G :** External pilot

**End block specification**
**E :** For wiring specification T200
**EL :** For wiring block left side
**ER :** For wiring block right side

## Wiring block assembly (one set)

F □ Z - □ - □

**Valve size**
**10:** 10 mm [0.394 in.] width
**15:** 15 mm [0.591 in.] width

**Voltage (Not required for T200□)**
**DC24**
**DC12**
**AC100** (for **D250□**, **D251□**, **D370NU** only)

**Piping specification**
**F100 :** Flat cable connector (DC specification)
**F101 :** Flat cable connector (DC specification)
**F200 :** Flat cable connector (DC specification)
**F201 :** Flat cable connector (DC specification)
**F260 :** Flat cable connector (DC specification)
**D250 :** D-sub connector (M2.6 screws)
**D251 :** D-sub connector (M2.6 screws)
**D250U :** D-sub connector (4-40UNC screws)
**D251U :** D-sub connector (4-40UNC screws)
**F100N :** Flat cable connector (DC specification), without power terminal
**F101N :** Flat cable connector (DC specification), without power terminal
**F200N :** Flat cable connector (DC specification), without power terminal
**F201N :** Flat cable connector (DC specification), without power terminal
**F260N :** Flat cable connector (DC specification), without power terminal
**D250N :** D-sub connector, without power terminal
**D251N :** D-sub connector, without power terminal
**D370NU :** D-sub connector (4-40UNC screws), without power terminal
**T200L :** Terminal block for left-side mounting
**T200R :** Terminal block for right-side mounting

## Back pressure prevention valve
**(2 pieces for split type, with dedicated gasket)**

F □ Z - E2

**Valve size**
**10:** 10 mm [0.394 in.] width
**15:** 15 mm [0.591 in.] width

## Individual air supply and exhaust spacer (Spacer for plug-in type, gasket, exhaust valve, and 2 mounting screws)

F □ Z - □

**Valve size**
**10:** 10 mm [0.394 in.] width
**15:** 15 mm [0.591 in.] width

**Specification**
**PPM :** Individual air supply spacer (with M5 female thread for F10)
**PP6 :** Individual air supply spacer (with $\phi$6 fitting for F15)
**PP8 :** Individual air supply spacer (with $\phi$8 fitting for F15)
**PRM :** Individual exhaust spacer (with M5 female thread for F10)
**PR6 :** Individual exhaust spacer (with $\phi$6 fitting for F15)
**PR8 :** Individual exhaust spacer (with $\phi$8 fitting for F15)

※For details, see p. 25.

## Muffler

KM - J □

**Fitting size**
**6:** Outer diameter $\phi$6 (for individual exhaust spacer)
**8:** Outer diameter $\phi$8 (for individual exhaust spacer)
**10:** Outer diameter $\phi$10
(Sales unit: Set of 10 mufflers)

## ■ Table for maximum number of valve units by wiring specification

| Wiring specification | Max. outputs | Maximum number of units: Wiring connection specification: Packed wiring (**Blank**) | Maximum number of units: Wiring connection specification: Double wiring (**-W**) |
|---|---|---|---|
| **F100** □ Flat cable (10P) | 8 | Varies depending on the number of mounted single solenoids, double solenoids, and block-off plates. The number of controlled solenoids should be designated as the maximum number of outputs or less. **D370NU** is a maximum of 20 units. | 4 units |
| **F101** □ Flat cable (10P) | 8 | | 4 units |
| **F200** □ Flat cable (20P) | 16 | | 8 units |
| **F201** □ Flat cable (20P) | 16 | | 8 units |
| **F260** □ Flat cable (26P) | 20 | | 10 units |
| **D250** □ D-sub connector (25P) | 16 | | 8 units |
| **D251** □ D-sub connector (25P) | 20 | | 10 units |
| **D370NU** D-sub connector (37P) | 32 | | 16 units |
| **T200** Terminal block (19 terminals) | 18 | | 9 units |

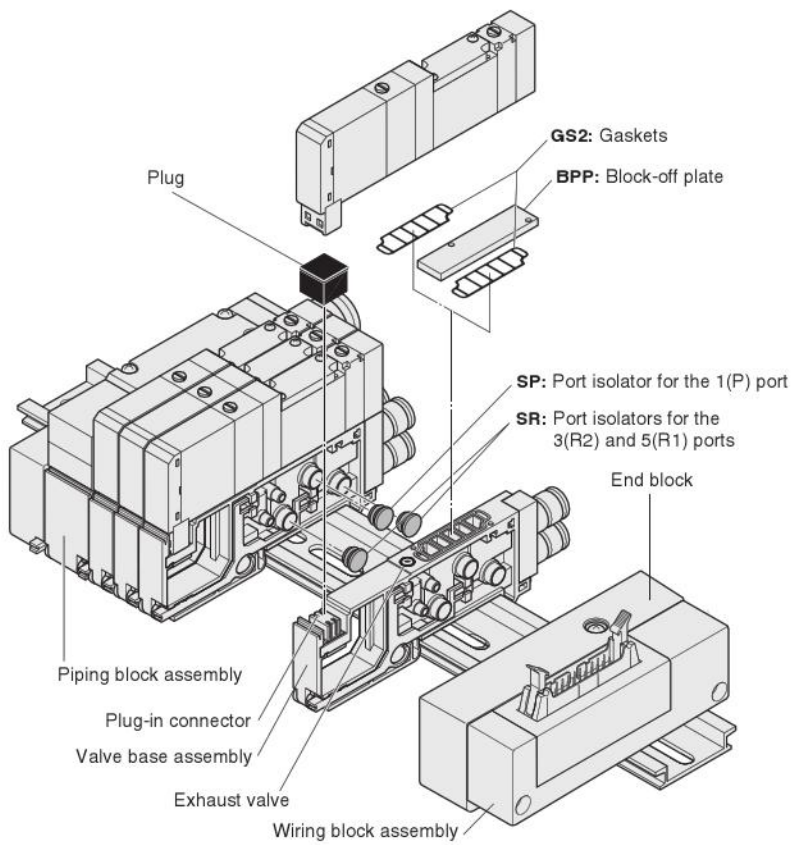


※Illustration shows the F10 series.

## Manifold Order Code Example

(12 units of F10 Series)

**F10M12PL-J5R-F201 DC24V**

| | |
|---|---|
| **stn.1～8** | **F10T0-A1-J5 DC24V** |
| **stn.9～11** | **F10T2-A1-J6 DC24V** |
| **stn.12** | **F10BPP-J6** |

Note: This order code example has no relationship to the illustration above.

## Precautions for Order Codes

● **Orders for valves only**

Place orders from "Single Valve Unit Order Codes" on p. 44.
However, **Blank, A2□, F3, F4□, F5, F6, F4A□, F4B□, F5A, F5B, F6A,** and **F6B** cannot be selected for the valve outlet type. For the wiring specification, **Blank** is the only selection.

● **Wiring connection specification**

**Blank** (packed wiring): Wiring is made in accordance with the mounted valve specifications.
**-W** (double wiring): Wiring is always for the double solenoid, regardless of the specifications of the mounted valve.

**Caution**

Caution should be exercised that the block-off plate wiring is always double wiring (allocated 2 control pins at 1 stn.), regardless of the wiring connection specification.
The block-off plate wiring can be made as wiring for a single solenoid. Add **-1W** to the end of the block-off plate order code in the case.
For details, consult us.

# F10, F15 Series Serial Transmission Compatible Manifold Order Codes

## ■ Manifold outlet specification

With dual use fitting blocks (base piping type)

**J**

**Outlet port fitting**
**F10:** $\phi$4, $\phi$6
**F15:** $\phi$6, $\phi$8

With selectable fittings (base piping type)

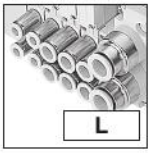

**L**

**Outlet port should be selected in accordance with the manifold fitting specification.**

With female thread blocks (base piping type)

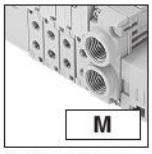

**M**

**Outlet port female thread**
**F10:** M5 × 0.8
**F15:** Rc1/8

With plates (direct piping type)

**Blank**

## ■ Pilot specification

**Blank**

Internal pilot manifold

**G**

External pilot manifold

## ■ Piping block specification (air supply and exhaust)

**Fitting block**
**-JR** : Dual use fitting, right-side mounting[Note13]
**-JL** : Dual use fitting, left-side mounting[Note13]
**-JD** : Dual use fitting, both-side mounting[Note13]
Fitting size (1(P), 3, 5(R) ports), $\phi$8, $\phi$10

**Female thread block**
**-MR** : Female thread, right-side mounting[Note13]
**-ML** : Female thread, left-side mounting[Note13]
**-MD** : Female thread, both-side mounting[Note13]
Female thread size (1(P), 3, 5(R) ports), Rc1/4

**Female thread block**
**-MRH** : Female thread, right-side mounting[Note14]
**-MLH** : Female thread, left-side mounting[Note14]
**-MDH** : Female thread, both-side mounting[Note14]
Female thread size (1(P), 3, 5(R) ports), NPT1/4

**Single use fitting block**
**-J5R** : Single use fitting, right-side mounting[Note13]
**-J5L** : Single use fitting, left-side mounting[Note13]
**-J5D** : Single use fitting, both-side mounting[Note13]
Fitting size (1(P), 3, 5(R) ports), $\phi$8
**-J6R** : Single use fitting, right-side mounting[Note13]
**-J6L** : Single use fitting, left-side mounting[Note13]
**-J6D** : Single use fitting, both-side mounting[Note13]
Fitting size (1(P), 3, 5(R) ports), $\phi$10

## ■ Transmission block specification

※ These are the serial transmission block specifications compatible with each system.

● Block on the right photo is the case of B7A Link Terminal.
For details, see p. 37-39.

**Integrated type**
**-A1 :** For OMRON CompoBus/S (16 outputs)
**-B1 :** For CC-Link (16 outputs)[Note2]
**-B3 :** For CC-Link (32 outputs)[Note2]
**-D1 :** For DeviceNet (16 outputs)
**-D3 :** For DeviceNet (32 outputs)
**-H1 :** For CompoNet (16 outputs)
**-K1 :** For EtherCAT (16 outputs)
**-K3 :** For EtherCAT (32 outputs)
**-M1 :** For EtherNet/IP (16 outputs)[Note2]
**-M3 :** For EtherNet/IP (32 outputs)[Note2]

**Stand-alone type**
**-31 :** For OMRON B7A Link Terminal (standard)
**-32 :** For OMRON B7A Link Terminal (high speed)

## ■ Wiring connection specification

**Blank**

**Packed wiring:** Wiring is made in accordance with the mounted valve specifications.

**-W**

**Double wiring:** Wiring is always for the double solenoid, regardless of the specifications of the mounted valve.

## ■ Wiring position (transmission block)

**Blank :** Left-side mounting
**-R :** Right-side mounting

## ■ Valve size

**F10** Standard type
**F10L** Low-current type
**F15** Standard type
**F15L** Low-current type

Note: Valves of **F10**□ and **F15**□ cannot be mounted together.

## ■ Valve size

**F10M** 10 mm [0.394 in.] width
**F15M** 15 mm [0.591 in.] width

| | Valve size | Valve units | Manifold type | Manifold outlet specification | Pilot specification | Piping block specification | Transmission block specification | Wiring connection specification | Wiring position |
|---|---|---|---|---|---|---|---|---|---|
| | Manifold model | | | | | | | | |
| Base piping type | F10M<br>F15M<br>Note3 | 2<br>:<br>□<br>Note1 | S | J<br>M | Blank<br>G | -JR -J5R<br>-JL -J6R<br>-JD -J5L<br>-MR -J6L<br>-ML -J5D<br>-MD -J6D | -31 -D1 -M1[Note2]<br>-32 -D3 -M3[Note2]<br>-A1 -H1<br>-B1[Note2] -K1<br>-B3[Note2] -K3 | Blank<br>-W | Blank<br>-R |
| Base piping type selectable fitting | | | S<br>SH | L | Blank<br>G | -JR[Note13] -MDH[Note14]<br>-JL[Note13] -J5R[Note13]<br>-JD[Note13] -J6R[Note13]<br>-MR[Note13] -J5L[Note13]<br>-ML[Note13] -J6L[Note13]<br>-MD[Note13] -J5D[Note13]<br>-MRH[Note14] -J6D[Note13]<br>-MLH[Note14] | -31 -D1 -M1[Note2]<br>-32 -D3 -M3[Note2]<br>-A1 -H1<br>-B1[Note2] -K1<br>-B3[Note2] -K3 | Blank<br>-W | Blank<br>-R |
| Direct piping type | | | | Blank | Blank<br>G | -JR[Note13] -MDH[Note14]<br>-JL[Note13] -J5R[Note13]<br>-JD[Note13] -J6R[Note13]<br>-MR[Note13] -J5L[Note13]<br>-ML[Note13] -J6L[Note13]<br>-MD[Note13] -J5D[Note13]<br>-MRH[Note14] -J6D[Note13]<br>-MLH[Note14] | -31 -D1 -M1[Note2]<br>-32 -D3 -M3[Note2]<br>-A1 -H1<br>-B1[Note2] -K1<br>-B3[Note2] -K3 | Blank<br>-W | Blank<br>-R |

Notes: 1. To determine the maximum number of units, see the table for maximum number of valve units by transmission block specification, on p. 70.
Notes: 2. CE marking compliant.
Notes: 3. Contact our nearest sales office for information about the F18 series.

## Valve specification

**T0 :** 2-position, for single solenoid only
**T1 :** 2-position, single solenoid specification
**T2 :** 2-position, double solenoid specification
**T3 :** 3-position, closed center
**T4 :** 3-position, exhaust center
**T5 :** 3-position, pressure center
**TA :** Tandem 3-port (NC and NC)[Note11]
**TB :** Tandem 3-port (NO and NO)[Note11]
**TC :** Tandem 3-port (NC and NO)[Note11]

## Operation type

**Blank**
Internal pilot type[Note9]

**G**
External pilot type[Note10]
(for positive pressure)
※ No vacuum valve can be mounted.

## Manual override

Manual override button

Manual override lever[Note7]

## Valve outlet type

**-A1** With plate[Note5] (base piping type)

### 5-port specification

| | | |
|---|---|---|
| **-FJ** | With dual use fitting block[Note13] (direct piping type) | **F10:** $\phi$4, $\phi$6<br>**F15:** $\phi$6, $\phi$8 |
| **-FJ5** | With single use fitting block[Note13] (direct piping type) | **F10:** $\phi$4<br>**F15:** $\phi$6 |
| **-FJ6** | With single use fitting block[Note13] (direct piping type) | **F10:** $\phi$6<br>**F15:** $\phi$8 |
| **-FM** | With female thread block[Note13] (direct piping type) | **F10:** M5 × 0.8<br>**F15:** Rc1/8 |
| **-FMH** | With female thread block[Note14] (direct piping type) | **F10:** 10-32UNF<br>**F15:** NPT1/8 |

### 3-port specification

| | | |
|---|---|---|
| **-FJ5A** | With single use fitting block, normally closed (NC)[Note13] (direct piping type) | **F10:** $\phi$4<br>**F15:** $\phi$6 |
| **-FJ5B** | With single use fitting block, normally open (NO)[Note13] (direct piping type) | **F10:** $\phi$4<br>**F15:** $\phi$6 |
| **-FJ6A** | With single use fitting block, normally closed (NC)[Note13] (direct piping type) | **F10:** $\phi$6<br>**F15:** $\phi$8 |
| **-FJ6B** | With single use fitting block, normally open (NO)[Note13] (direct piping type) | **F10:** $\phi$6<br>**F15:** $\phi$8 |
| **-FMA** | With female thread block, normally closed (NC)[Note13] (direct piping type) | **F10:** M5 × 0.8<br>**F15:** Rc1/8 |
| **-FMAH** | With female thread block, normally closed (NC)[Note14] (direct piping type) | **F10:** 10-32UNF<br>**F15:** NPT1/8 |
| **-FMB** | With female thread block, normally open (NO)[Note13] (direct piping type) | **F10:** M5 × 0.8<br>**F15:** Rc1/8 |
| **-FMBH** | With female thread block, normally open (NO)[Note14] (direct piping type) | **F10:** 10-32UNF<br>**F15:** NPT1/8 |

**Caution:** The 3-port specifications are only available in the valve specification **T0**, **T1**, and **T2**.

## Manifold fitting specification

### 5-port specification

| | | |
|---|---|---|
| **-J5** | With single use fitting block[Note13] (base piping type) | **F10:** $\phi$4<br>**F15:** $\phi$6 |
| **-J6** | With single use fitting block[Note13] (base piping type) | **F10:** $\phi$6<br>**F15:** $\phi$8 |
| **-M** | With female thread block[Note13] (base piping type) | **F10:** M5 × 0.8<br>**F15:** Rc1/8 |
| **-MH** | With female thread block[Note14] (base piping type) | **F10:** 10-32UNF<br>**F15:** NPT1/8 |

### 3-port specification

| | | |
|---|---|---|
| **-J5A** | With single use fitting block, normally closed (NC)[Note13] (base piping type) | **F10:** $\phi$4<br>**F15:** $\phi$6 |
| **-J5B** | With single use fitting block, normally open (NO)[Note13] (base piping type) | **F10:** $\phi$4<br>**F15:** $\phi$6 |
| **-J6A** | With single use fitting block, normally closed (NC)[Note13] (base piping type) | **F10:** $\phi$6<br>**F15:** $\phi$8 |
| **-J6B** | With single use fitting block, normally open (NO)[Note13] (base piping type) | **F10:** $\phi$6<br>**F15:** $\phi$8 |
| **-MA** | With female thread block, normally closed (NC)[Note13] (base piping type) | **F10:** M5 × 0.8<br>**F15:** Rc1/8 |
| **-MAH** | With female thread block, normally closed (NC)[Note14] (base piping type) | **F10:** 10-32UNF<br>**F15:** NPT1/8 |
| **-MB** | With female thread block, normally open (NO)[Note13] (base piping type) | **F10:** M5 × 0.8<br>**F15:** Rc1/8 |
| **-MBH** | With female thread block, normally open (NO)[Note14] (base piping type) | **F10:** 10-32UNF<br>**F15:** NPT1/8 |

**Caution:** The 3-port specifications are only available in the valve specification **T0**, **T1**, and **T2**.

## Port isolator

**Blank :** No port isolator
**-SP :** For 1(P) port[Note8]
**-SR :** For 3(R2), 5(R1) ports[Note8]
**-SA :** For 1(P), 3(R2), and 5(R1) ports[Note8]

## Back pressure prevention valve

**Blank**
No back pressure prevention valve

**-E2**
With back pressure prevention valve[Note12]

## Individual air supply and exhaust spacer

**Blank :** No spacer
**-PPM :** Individual air supply spacer (with M5 female thread for F10)
**-PP6 :** Individual air supply spacer (with $\phi$6 fitting for F15)
**-PP8 :** Individual air supply spacer (with $\phi$8 fitting for F15)
**-PRM :** Individual exhaust spacer (with M5 female thread for F10)
**-PR6 :** Individual exhaust spacer (with $\phi$6 fitting for F15)
**-PR8 :** Individual exhaust spacer (with $\phi$8 fitting for F15)
For details, see p. 25.

| Station | Valve size | Valve specification | Operation type | Manual override | Valve outlet type | Manifold fitting specification | Back pressure prevention valve | Individual air supply and exhaust spacer | Port isolator | Voltage |
|---|---|---|---|---|---|---|---|---|---|---|
| Mounting valve model | | | | | | | | | | |
| stn. 1<br>:<br>stn.□<br>Note4 | F10<br>F10L<br>F15<br>F15L | T0 T3 TA[Note11]<br>T1 T4 TB[Note11]<br>T2 T5 TC[Note11] | Blank[Note9]<br>G[Note10] | Blank<br>-R[Note7] | -A1[Note5] | | Blank<br>-E2[Note12] | Blank<br>-PPM -PRM<br>-PP6 -PR6<br>-PP8 -PR8 | Blank<br>-SP[Note8]<br>-SR[Note8]<br>-SA[Note8] | DC24V |
| | F10 F15 | BPP (for block-off plate)[Note6] | | | | | | | | |
| stn. 1<br>:<br>stn.□<br>Note4 | F10<br>F10L<br>F15<br>F15L | T0 T3 TA[Note11]<br>T1 T4 TB[Note11]<br>T2 T5 TC[Note11] | Blank[Note9]<br>G[Note10] | Blank<br>-R[Note7] | -A1[Note5] | -J5[Note13] -J6A[Note13]<br>-J6[Note13] -J6B[Note13]<br>-M[Note13] -MA[Note13]<br>-MH[Note14] -MAH[Note14]<br>-J5A[Note13] -MB[Note13]<br>-J5B[Note13] -MBH[Note14] | Blank<br>-E2[Note12] | Blank<br>-PPM -PRM<br>-PP6 -PR6<br>-PP8 -PR8 | Blank<br>-SP[Note8]<br>-SR[Note8]<br>-SA[Note8] | DC24V |
| | F10 F15 | BPP (for block-off plate)[Note6] | | | | | | | | |
| stn. 1<br>:<br>stn.□<br>Note4 | F10<br>F10L<br>F15<br>F15L | T0 T3 TA[Note11]<br>T1 T4 TB[Note11]<br>T2 T5 TC[Note11] | Blank[Note9]<br>G[Note10] | Blank<br>-R[Note7] | -FJ[Note13] -FJ6A[Note13]<br>-FJ5[Note13] -FJ6B[Note13]<br>-FJ6[Note13] -FMA[Note13]<br>-FM[Note13] -FMAH[Note14]<br>-FMH[Note14] -FMB[Note13]<br>-FJ5A[Note13] -FMBH[Note14]<br>-FJ5B[Note13] | | Blank<br>-E2[Note12] | Blank<br>-PPM -PRM<br>-PP6 -PR6<br>-PP8 -PR8 | Blank<br>-SP[Note8]<br>-SR[Note8]<br>-SA[Note] | DC24V |
| | F10 F15 | BPP (for block-off plate)[Note6] | | | | | | | | |

Notes: 4. Valve mounting location is from the left, with the solenoid on top, and the 4(A), 2(B) ports side in front.
5. When selecting **J**, **M**, or **L** (base piping type) for the manifold outlet specifications, always enter **-A1** (with plate) for the valve outlet type.
6. The wiring on the block off plate uses double wiring (2 control points allocated) regardless of the wiring specifications. However, we can provide block off plates with a -1W suffix on the model number for the block off plate wired for connecting single solenoids.
7. When the valve specification is **T1** or **T2**, the manual override lever is placed only on the A side.
8. Port isolators can be installed only when piping blocks are mounted on both sides. In addition, only 1 port isolator can be mounted in 1 manifold for **-SA**, or 1 each port isolator for **-SP** and **-SR** for a total of 2 locations. When shipping, the designated port isolators are mounted between the designated station and the station to its immediate left (the next smaller stn. No.).
9. Cannot be mounted on the external pilot manifold.
10. Cannot be mounted on the internal pilot manifold.
11. Not available in external pilot type.
12. Not available with the individual exhaust spacer.
13. Can be selected only when the manifold type is **S**.
14. Can be selected only when the manifold type is **SH**.

## Parts for manifold

F □ Z - □

**Valve size**
**10:** 10 mm [0.394 in.] width
**15:** 15 mm [0.591 in.] width

**Parts content**
**GS2 :** Gasket (gasket and exhaust valve)
**SP :** Port isolator (for 1(P) port)
**SR :** Port isolator (for 3(R2), 5(R1) ports)
**SA :** Port isolator (for 1(P), 3(R2), 5(R1) ports)

## Block-off plate (block-off plate, 2 mounting screws, and plug)

F □ BPP

**Valve size**
**10:** 10 mm [0.394 in.] width
**15:** 15 mm [0.591 in.] width

## Valve base assembly
**(valve base, gasket, lead wire, and plug-in connector)**

F □ Z □ - □ - F

**Valve size**
**10:** 10 mm [0.394 in.] width
**15:** 15 mm [0.591 in.] width

**Pilot specification**
**Blank :** Internal pilot
**G :** External pilot

**Piping specification**
**VJ :** Dual use fitting valve base
**VJ5 :** Single use fitting valve base F10: $\phi$4, F15: $\phi$6
**VJ6 :** Single use fitting valve base F10: $\phi$6, F15: $\phi$8
**VJ5A :** 3-port specification normally closed, single use fitting valve base F10: $\phi$4, F15: $\phi$6
**VJ5B :** 3-port specification normally open, single use fitting valve base F10: $\phi$4, F15: $\phi$6
**VJ6A :** 3-port specification normally closed, single use fitting valve base F10: $\phi$6, F15: $\phi$8
**VJ6B :** 3-port specification normally open, single use fitting valve base F10: $\phi$6, F15: $\phi$8
**VM :** Female thread valve base F10: M5 × 0.8, F15: Rc1/8
**VMA :** 3-port specification normally closed, female thread valve base F10: M5 × 0.8, F15: Rc1/8
**VMB :** 3-port specification normally open, female thread valve base F10: M5 × 0.8, F15: Rc1/8
**VMH :** Female thread valve base F10: 10-32UNF, F15: NPT1/8
**VMAH :** 3-port specification normally closed, female thread valve base F10: 10-32UNF, F15: NPT1/8
**VMBH :** 3-port specification normally open, female thread valve base F10: 10-32UNF, F15: NPT1/8
**VP :** Valve base plate

## Piping block assembly

F □ Z □ - □

**Valve size**
**10:** 10 mm [0.394 in.] width
**15:** 15 mm [0.591 in.] width

**Piping specification**
**PJ :** Dual use fitting piping block
**PJ5 :** Single use fitting piping block $\phi$8
**PJ6 :** Single use fitting piping block $\phi$10
**PM :** Female thread piping block Rc1/4
**PMH :** Female thread piping block NPT1/4

**Pilot specification**
**Blank :** Internal pilot
**G :** External pilot

## End blocks (one set of left and right)

F □ Z □ - □

**Valve size**
**10:** 10 mm [0.394 in.] width
**15:** 15 mm [0.591 in.] width

**End block specification**
**EL :** For left side
**ER :** For right side

**Pilot specification**
**Blank :** Internal pilot
**G :** External pilot

## Wiring block assembly ※

F □ Z - F201N - DC24

**Valve size**
**10:** 10 mm [0.394 in.] width
**15:** 15 mm [0.591 in.] width

※ Use this when the transmission block specification is **-31**, or **-32**.

## Back pressure prevention valve
**(2 units for split type, with dedicated gasket)**

F □ Z - E2

**Valve size**
**10:** 10 mm [0.394 in.] width
**15:** 15 mm [0.591 in.] width

## Individual air supply and exhaust spacer (Spacer for plug-in type, gasket, exhaust valve, and 2 mounting screws)

F □ Z - □

**Valve size**
**10:** 10 mm [0.394 in.] width
**15:** 15 mm [0.591 in.] width

**Specification**
**PPM :** Individual air supply spacer (with M5 female thread for F10)
**PP6 :** Individual air supply spacer (with $\phi$6 fitting for F15)
**PP8 :** Individual air supply spacer (with $\phi$8 fitting for F15)
**PRM :** Individual exhaust spacer (with M5 female thread for F10)
**PR6 :** Individual exhaust spacer (with $\phi$6 fitting for F15)
**PR8 :** Individual exhaust spacer (with $\phi$8 fitting for F15)

※ For details, see p. 25.

## Serial transmission block (single unit)

YS2 □ □

**Transmission block specification**
**31:** For OMRON B7A Link Terminal (standard)
**32:** For OMRON B7A Link Terminal (high speed)

**Wiring position**
**L :** For stand-alone type, left-side mounting ※
**R :** For stand-alone type, right-side mounting ※
※ DIN rail included (length 75 mm [2.95 in.])

## Dedicated for manifold mounting

YS6 □

**Transmission block specification**
**A1 :** For OMRON CompoBus/S (16 outputs)
**B1 :** For CC-Link (16 outputs)
**B3 :** For CC-Link (32 outputs)
**D1 :** For DeviceNet (16 outputs)
**D3 :** For DeviceNet (32 outputs)
**H1 :** For CompoNet (16 outputs)

YS7 □ □

**Transmission block specification**
**K1 :** For EtherCAT (16 outputs)
**K3 :** For EtherCAT (32 outputs)
**M1 :** For EtherNet/IP (16 outputs)
**M3 :** For EtherNet/IP (32 outputs)

**Wiring position**
**L :** Left-side mounting
**R :** Right-side mounting

## Muffler

KM - J □

**Fitting size**
**6:** Outer diameter $\phi$6 (for individual exhaust spacer)
**8:** Outer diameter $\phi$8 (for individual exhaust spacer)
**10:** Outer diameter $\phi$10
(Sales unit: Set of 10 mufflers)

## ■ Table for maximum number of valve units by transmission block specification

| Transmission block specifications | Max. outputs | Maximum number of units — Wiring connection specification: Packed wiring (**Blank**) | Maximum number of units — Wiring connection specification: Double wiring (**-W**) |
|---|---|---|---|
| **-31 :** For OMRON B7A Link Terminal (standard) | 16 | Varies depending on the number of mounted single solenoids, double solenoids, and block-off plates. The number of controlled solenoids should be designated as the maximum number of outputs or less. **-B3, -D3, and -K3 -M3** are a maximum of 20 units. | 8 units |
| **-32 :** For OMRON B7A Link Terminal (high speed) | 16 | | 8 units |
| **-A1 :** For OMRON CompoBus/S (16 outputs) | 16 | | 8 units |
| **-B1 :** For CC-Link (16 outputs) | 16 | | 8 units |
| **-B3 :** For CC-Link (32 outputs) | 32 | | 16 units |
| **-D1 :** For DeviceNet (16 outputs) | 16 | | 8 units |
| **-D3 :** For DeviceNet (32 outputs) | 32 | | 16 units |
| **-H1 :** For CompoNet (16 outputs) | 16 | | 8 units |
| **-K1 :** For EtherCAT (16 outputs) | 16 | | 8 units |
| **-K3 :** For EtherCAT (32 outputs) | 32 | | 16 units |
| **-M1 :** For EtherNet/IP (16 outputs) | 16 | | 8 units |
| **-M3 :** For EtherNet/IP (32 outputs) | 32 | | 16 units |

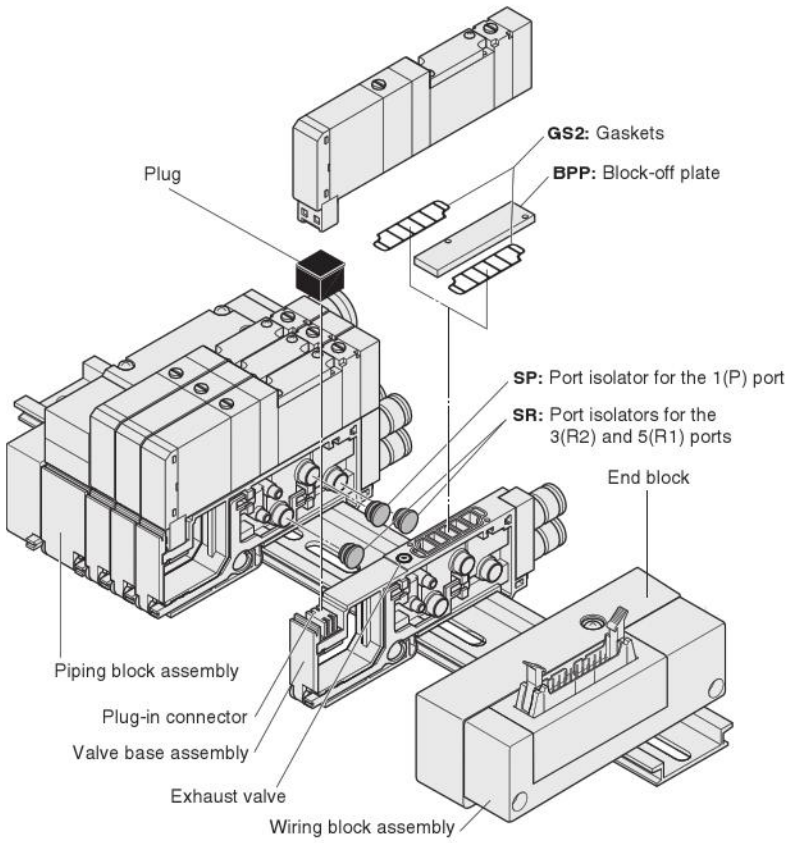


※Illustration shows the F10 series.

## Manifold Order Code Example

(8 units of F10 Series)

**F10M8SL-J5R-B1-W**

| | |
|---|---|
| **stn.1～5** | **F10T0-A1-J5 DC24V** |
| **stn.6～7** | **F10T2-A1-J6 DC24V** |
| **stn.8** | **F10BPP-J6** |

Note: This order code example has no relationship to the illustration above.

## Precautions for Order Codes

● **Orders for valves only**

Place orders from "Single Valve Unit Order Codes" on p. 44.
However, **Blank, A2□, F3, F4□, F5, F6, F4A□, F4B□, F5A, F5B, F6A,** and **F6B** cannot be selected for the valve outlet type. For the wiring specification, **Blank** is the only selection.

● **Wiring connection specification**

**Blank** (packed wiring): Wiring is made in accordance with the mounted valve specifications.
**-W** (double wiring): Wiring is always for the double solenoid, regardless of the specifications of the mounted valve.

**Caution**

Caution should be exercised that the block-off plate wiring is always double wiring (allocated 2 control pins at 1 stn.), regardless of the wiring connection specification.
The block-off plate wiring can be made as wiring for a single solenoid. Add **-1W** to the end of the block-off plate order code in the case.
For details, consult us.

# F18 Series Single Valve Unit Order Codes

## Valve size

**F18**

18 mm [0.709 in.] width

## Manual override

Manual override button

No protrusion with DIN connector

Manual override lever Note1

Protruding locking type Note5

## Valve specification

**T0:** 2-position, for single solenoid only
**T1:** 2-position single solenoid specification (for both single and double solenoid use)
**T2:** 2-position double solenoid specification (for both single and double solenoid use)
**T3:** 3-position closed center
**T4:** 3-position exhaust center Note4
**T5:** 3-position pressure center Note4

## Operation type

**Blank**

Internal pilot type

**G**

External pilot type Note (for positive pressure)

**V**

External pilot type Note (for vacuum) ※
※ This is a vacuum valve.

Note: When using as a single unit, select **-A2** (A type with sub-base) for the valve outlet type. Without a sub-base, piping for the external pilot is not possible.

## Valve outlet type

Without inlet/outlet block

With A type outlet plate

With A type sub-base

**Inlet/outlet port** Rc1/4

With A type sub-base

**Inlet/outlet port** NPT1/4

With outlet port dual use fitting block

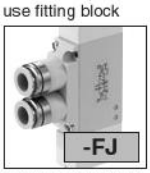


**Outlet port fitting** $\phi$8, $\phi$10

With outlet port single use fitting block

**Outlet port fitting** $\phi$8

With outlet port single use fitting block

**Outlet port fitting** $\phi$10

With outlet port female thread block

**Outlet port** Rc1/4

With outlet port female thread block

**Outlet port** NPT1/4

With outlet port dual use fitting block
With inlet port female thread block

**Inlet port** Rc1/4
**Outlet port fitting** $\phi$8, $\phi$10

With outlet port female thread block
With inlet port female thread block

**Inlet port** Rc1/4
**Outlet port** Rc1/4

With outlet port female thread block
With inlet port female thread block

**Inlet port** NPT1/4
**Outlet port** NPT1/4

With outlet port single use fitting block
With inlet port female thread block

**Inlet port** Rc1/4
**Outlet port fitting** $\phi$8

With outlet port single use fitting block
With inlet port female thread block

**Inlet port** Rc1/4
**Outlet port fitting** $\phi$10

## Wiring specification

L type plug connector
Without connector

S type plug connector
Without connector

S type plug connector
Lead wire 300 mm※

L type plug connector
Lead wire 300 mm※

S type plug connector
Lead wire 3000 mm※

L type plug connector
Lead wire 3000 mm※

DIN connector type with indicator Note6

DIN connector type without connector Note6

**-39N**

※300 mm = 11.8 in.
3000 mm = 118 in.

| Valve size | Valve specification | Operation type | Manual override | Valve outlet type | Wiring specification | Voltage |
|---|---|---|---|---|---|---|
| F18 | T0<br>T1<br>T2<br>T3<br>T4 Note4<br>T5 Note4 | Blank<br>G<br>V | Blank<br>-R Note1<br>-83 Note5 | Blank Note2<br>-A1 Note2<br>-A2<br>-A2H<br>-FJ Note2, 4<br>-FJ5 Note2, 4<br>-FJ6 Note2, 4<br>-FM Note2, 4<br>-FMH Note2, 4<br>-F3 Note3<br>-F4 Note3<br>-F4H Note3<br>-F5 Note3<br>-F6 Note3 | Blank<br>-PN<br>-PS<br>-PL<br>-PS3<br>-PL3<br>-39L Note6<br>-39N Note6 | DC24V<br>DC12V<br>AC100V Note7<br>AC120V<br>AC240V Note5 |

Notes: 1. When the valve specification is **T1** or **T2**, the manual override lever is placed only on the A side. This is not available with **-39□**.
2. Two manifold mounting screws are included.
3. "With inlet port female thread block" is compatible with the internal pilot type valve only.
4. Not available in the vacuum valves.
5. Only for wiring specification **-39□**.
6. Not available for valve specification **T1**. In addition, the valve is used only as a double solenoid for **T2**.
7. Not available with DIN connectors.

Remark: Negative common specifications are also available as made to order products (add **-129W** to the end of order code). For details, consult us.

## F18 Series Single Valve Unit Additional Parts Order Codes

### ● For internal pilot

**F18 Z - □**

**Parts content**

**21** : Mounting bracket (mounting bracket, 2 mounting screws)
**25** : Sub-base Rc1/4 (sub-base body, gasket, exhaust valve)Note1
**25H** : Sub-base NPT1/4 (sub-base body, gasket, exhaust valve)Note1
**P** : Plate (plate, gasket, 2 mounting screws)
**J** : Dual use fitting block (fitting block, gasket, 2 mounting screws)
**J5** : Single use fitting block $\phi$ 8 (fitting block, gasket, 2 mounting screws)
**J6** : Single use fitting block $\phi$ 10 (fitting block, gasket, 2 mounting screws)
**M** : Female thread block Rc1/4 (female thread block, gasket, 2 mounting screws)
**MH** : Female thread block NPT1/4 (female thread block, gasket, 2 mounting screws)
**MP** : P port female thread block Rc1/4 (P port female thread block, gasket)Note1
**MPH** : P port female thread block NPT1/4 (P port female thread block, gasket)Note1
**GS1** : Gasket (gasket, exhaust valve)Note2

Notes: 1. Valve mounting screws are not included.
2. Caution should be exercised as this gasket is different from the **GS2** gasket for the split-type manifolds.

### ● For external pilot

**F18 Z - □**

**Parts content**

**P** : Plate (plate, gasket, 2 mounting screws)
**J** : Dual use fitting block (fitting block, gasket, 2 mounting screws)
**J5** : Single use fitting block $\phi$ 8 (fitting block, gasket, 2 mounting screws)
**J6** : Single use fitting block $\phi$ 10 (fitting block, gasket, 2 mounting screws)
**M** : Female thread block Rc1/4 (female thread block, gasket, 2 mounting screws)
**MH** : Female thread block NPT1/4 (female thread block, gasket, 2 mounting screws)
**GS1** : Gasket (gasket, exhaust valve)Note

Note: Caution should be exercised as this gasket is different from the **GS2** gasket for the split type manifolds.

### Sub-base for external pilot

**F18 ZG - 25 (Sub-base Rc1/4)**

**F18 ZG - 25H (Sub-base NPT1/4)**

### Connector-related order codes

**FZ - □**

**Valve specification**
For **T1, T2, T3, T4, T5**

**Connector specification**

**CP** : Connector, lead wire length 300 mm [11.8 in.] (black, red, white, for total of 3 lead wires)
**CP3** : Connector, lead wire length 3000 mm [118 in.] (black, red, white, for total of 3 lead wires)
**CLN** : Connector without lead wire (1 short bar and 3 contacts included)
**CC1.5** : Cabtyre cable length 1500 mm [59 in.] ※
**CC3** : Cabtyre cable length 3000 mm [118 in.] ※

※For details, see p. 19.

**FZ0 - □**

**Valve specification**
For **T0**

**Connector specification**

**CP** : Connector, lead wire length 300 mm [11.8 in.] (black, red, for total of 2 lead wires)
**CP3** : Connector, lead wire length 3000 mm [118 in.] (black, red, for total of 2 lead wires)
**CLN** : Connector without lead wire (1 short bar, 2 contacts included)

# F18 Series Monoblock Manifold A Type (Base Piping Type) Order Codes

## Valve size

**F18M**

18 mm [0.709 in.] width

## Manifold outlet specification

With dual use fitting blocks (base piping type)

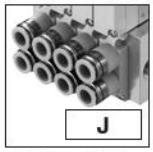


**Outlet port fitting**
$\phi$8, $\phi$10

With selectable fittings (base piping type)

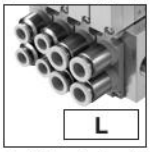


**Outlet port should be selected in accordance with the manifold fitting specification.**

With female thread blocks (base piping type)

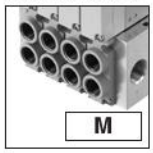


**Outlet port female thread**
Rc1/4

## Valve specification

**T0 :** 2-position, for single solenoid only
**T1 :** 2-position, single solenoid specification
**T2 :** 2-position, double solenoid specification
**T3 :** 3-position, closed center
**T4 :** 3-position, exhaust center Note6
**T5 :** 3-position, pressure center Note6

## Pilot specification

**Blank**
Internal pilot manifold

**G**
External pilot manifold

## Operation type

**Blank**
Internal pilot type Note4

**G**
External pilot type Note5 (for positive pressure)

**V**
External pilot type Note5 (for vacuum) ※
※ This is a vacuum valve.
Note: Cannot be mounted together with a positive pressure valve.

## Manual override

Manual override button

No protrusion with DIN connector

Manual override lever Note2

Protruding locking type Note7

## Valve outlet type

With plate Note3 (base piping type)

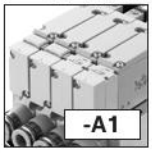


## Wiring specification

L type plug connector Without connector

S type plug connector Without connector

S type plug connector Lead wire 300 mm ※

L type plug connector Lead wire 300 mm ※

S type plug connector Lead wire 3000 mm ※

L type plug connector Lead wire 3000 mm ※

Pre-wired positive common terminal S type plug connector Lead wire 300 mm ※

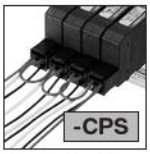


Pre-wired positive common terminal L type plug connector Lead wire 300 mm ※

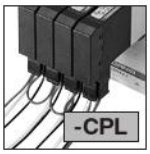


Pre-wired positive common terminal S type plug connector Lead wire 3000 mm ※

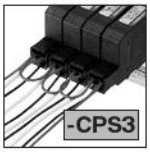


Pre-wired positive common terminal L type plug connector Lead wire 3000 mm ※

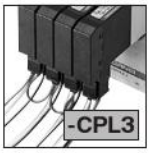


DIN connector type with indicator Note8

DIN connector type without connector Note8

**-39N**

※ 300 mm = 11.8 in.
3000 mm = 118 in.

## Individual air supply and exhaust spacer

**Blank :** No spacer
**-NP8 :** Individual air supply spacer (with $\phi$8 fitting) Note11
**-NP0 :** Individual air supply spacer (with $\phi$10 fitting) Note11
**-NR8 :** Individual exhaust spacer (with $\phi$8 fitting) Note11
**-NR0 :** Individual exhaust spacer (with $\phi$10 fitting) Note11
For details, see p. 25.

## Manifold fitting specification

**-J5** With single use $\phi$8 fitting block Note9 (base piping type)

**-J6** With single use $\phi$10 fitting block Note9 (base piping type)

**-MH** With female thread NPT1/4 block Note10 (base piping type)

| Valve size | Valve units | Manifold type | Manifold outlet specification | Pilot specification | Station | Valve size | Valve specification | Operation type | Manual override | Valve outlet type | Wiring specification | Manifold fitting specification | Individual air supply and exhaust spacer | Voltage |
|---|---|---|---|---|---|---|---|---|---|---|---|---|---|---|
| Manifold model | | | | | Mounting valve model | | | | | | | | | |
| F18M | 2 : 20 | A | J<br>M | Blank<br>G | stn. 1 : stn.□ Note1 | F18 | T0<br>T1<br>T2<br>T3<br>T4 Note6<br>T5 Note6 | Blank Note4<br>G Note5<br>V Note5 | Blank<br>-R Note2 | -A1 Note3 | Blank<br>-PN -CPS<br>-PS -CPL<br>-PL -CPS3<br>-PS3 -CPL3<br>-PL3 | | Blank<br>-NP8 Note11<br>-NP0 Note11<br>-NR8 Note11<br>-NR0 Note11 | DC24V<br>DC12V<br>AC100V |
| | | | | | | | BP (for block-off plate) | | | | | | | |
| | | A<br>AH | L | Blank<br>G | stn. 1 : stn.□ Note1 | F18 | T0<br>T1<br>T2<br>T3<br>T4 Note6<br>T5 Note6 | Blank Note4<br>G Note5<br>V Note5 | Blank<br>-R Note2<br>-83 Note7 | -A1 Note3 | Blank -CPS<br>-PN -CPL<br>-PS -CPS3<br>-PL -CPL3<br>-PS3 -39L Note8<br>-PL3 -39N Note8 | -J5 Note9<br>-J6 Note9<br>-MH Note10 | Blank<br>-NP8 Note11<br>-NP0 Note11<br>-NR8 Note11<br>-NR0 Note11 | DC24V<br>DC12V<br>AC100V Note11<br>AC120V<br>AC240V Note7 |
| | | | | | | | BP (for block-off plate) | | | | | | | |

Notes: 1. Valve mounting location is from the left, with the solenoid on top, and the 4(A), 2(B) ports side in front.
2. When the valve specification is **T1** or **T2**, the manual override lever is placed only on the A side. This is not available with **-39**□.
3. Always enter **-A1**.
4. Cannot be mounted on the external pilot manifold.
5. Cannot be mounted on the internal pilot manifold.
6. Not available in the vacuum valves.
7. Only for wiring specification **-39**□.
8. Not available for valve specification **T1**. In addition, the valve is used only as a double solenoid for **T2**.
9. Can be selected only when the manifold type is **A**.
10. Can be selected only when the manifold type is **AH**.
11. Not available with DIN connectors (**-39**□).

Remark: Negative common specifications are also available as made to order products (add **-129W** to the ends of the valve and manifold model order codes). For details, consult us.

## Gasket (gasket and exhaust valve)

**F18 Z - GS1**

## Block-off plate (block-off plate and 2 mounting screws)

**F18 BP**

## Individual air supply and exhaust spacer (Spacer for non-plug-in type, gasket, exhaust valve, and 2 mounting screws)

**F18 Z - □**

**Specification**
**NP8 :** Individual air supply spacer (with $\phi$ 8 fitting)
**NP0 :** Individual air supply spacer (with $\phi$ 10 fitting)
**NR8 :** Individual exhaust spacer (with $\phi$ 8 fitting)
**NR0 :** Individual exhaust spacer (with $\phi$ 10 fitting)

※For details, see p. 25.
※Not available with DIN connectors (**-39**□).

## Muffler

**KM - J □**

**Fitting size**
**8:** Outer diameter $\phi$ 8 (for individual exhaust spacer)
**10:** Outer diameter $\phi$ 10 (for individual exhaust spacer)
(Sales unit: Set of 10 mufflers)

## Connector-related order codes

**FZ□ - □**

**Valve specification**
**Blank:** For **T1, T2, T3, T4, T5**
**0:** For **T0**

**Connector specification**
**CP** : Connector, lead wire length 300 mm [11.8 in.]
**CP3** : Connector, lead wire length 3000 mm [118 in.]
**CLN** : Connector without lead wire (short bar and contacts included)
**PA** : Positive common A type, lead wire length 300 mm [11.8 in.]※
**PA3** : Positive common A type, lead wire length 3000 mm [118 in.]※
**PB** : Positive common B type, lead wire length 300 mm [11.8 in.]※
**PB3** : Positive common B type, lead wire length 3000 mm [118 in.]※
**PC** : Positive common C type, lead wire length 300 mm [11.8 in.]※
**PC3** : Positive common C type, lead wire length 3000 mm [118 in.]※
**CC1.5** : Cabtyre cable, length 1500 mm [59 in.]Note ※
**CC3** : Cabtyre cable, length 3000 mm [118 in.]Note ※

※For details, see p. 19.
Note: Not available for **T0**

### ● Common connector assembly

**A type: FZ-PA□※**

Red Common wire (+)
Black A side (–)
White B side (–) (Insert when using as double solenoid) Note

**B type: FZ-PB□※**

Red Common wire (+)
Black A side (–)
White B side (–) (Insert when using as double solenoid) Note

**C type: FZ-PC□※**

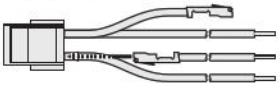

Red Common wire (+)
Black A side (–)
White B side (–) (Insert when using as double solenoid) Note
Red Common wire (+)

※ Lead wire length **Blank:** 300 mm [11.8 in.]
**3:** 3000 mm [118 in.]

Note: White lead wire is not available for **FZ0-P□□**.

### Manifold Order Code Example

(6 units of F18 Series)

**F18M6AL**

**stn.1～2 F18T0-A1-PS-J5 DC24V**
**stn.3～5 F18T2-A1-PS-J6 DC24V**
**stn.6 F18BP-J6**

## Precautions for Order Codes

**● Manifold outlet specification**
Select from among "dual use fitting blocks", "with female thread blocks" or "with selectable fittings." For repair or replacement, purchase the single valve unit additional parts, **F18Z-J** (dual use fitting block), **F18Z-J** □ (single use fitting block), or **F18Z-M** □ (female thread block), on p. 73.

**● Orders for valves only**
Place orders from "F18 Series Single Valve Unit Order Codes" on p. 72. Note, however, that the only available valve outlet type is **A1**. In addition, for common terminal wiring connections, order the common connector assemblies listed above separately.

# F18 Series Monoblock Manifold F Type (Direct Piping Type) Order Codes

## Valve size

**F18M**

18 mm [0.709 in.] width

## Valve specification

**T0 :** 2-position, for single solenoid only
**T1 :** 2-position, single solenoid specification
**T2 :** 2-position, double solenoid specification
**T3 :** 3-position, closed center
**T4 :** 3-position, exhaust center
**T5 :** 3-position, pressure center

## Manual override

Manual override button

No protrusion with DIN connector

Manual override lever Note2

Protruding locking type Note3

## Valve outlet type

**-FJ** With dual use $\phi$ 8, $\phi$ 10 fitting block Note5 (direct piping type)

**-FJ5** With single use $\phi$ 8 fitting block Note5 (direct piping type)

**-FJ6** With single use $\phi$ 10 fitting block Note5 (direct piping type)

**-FM** With Rc1/4 female thread block Note5 (direct piping type)

**-FMH** With NPT1/4 female thread block Note6 (direct piping type)

## Wiring specification

L type plug connector
Without connector

S type plug connector
Without connector

S type plug connector
Lead wire 300 mm※

L type plug connector
Lead wire 300 mm※

S type plug connector
Lead wire 3000 mm※

L type plug connector
Lead wire 3000 mm※

Pre-wired positive common terminal
S type plug connector
Lead wire 300 mm※

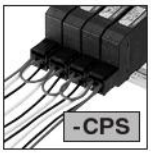


Pre-wired positive common terminal
L type plug connector
Lead wire 300 mm※

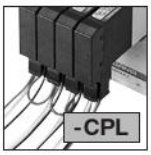


Pre-wired positive common terminal
S type plug connector
Lead wire 3000 mm※

Pre-wired positive common terminal
L type plug connector
Lead wire 3000 mm※

※300 mm = 11.8 in.
3000 mm = 118 in.

DIN connector type with indicator Note4

DIN connector type without connector Note4

**-39N**

## Individual air supply and exhaust spacer

**Blank :** No spacer
**-NP8 :** Individual air supply spacer (with $\phi$ 8 fitting) Note7
**-NP0 :** Individual air supply spacer (with $\phi$ 10 fitting) Note7
**-NR8 :** Individual exhaust spacer (with $\phi$ 8 fitting) Note7
**-NR0 :** Individual exhaust spacer (with $\phi$ 10 fitting) Note7

For details, see p. 25.

| Valve size | Valve units | Manifold type | Station | Valve size | Valve specification | Manual override | Valve outlet type | Wiring specification | Individual air supply and exhaust spacer | Voltage |
|---|---|---|---|---|---|---|---|---|---|---|
| Manifold model | | | | Mounting valve model | | | | | | |
| F18M | 2<br>:<br>20 | F<br>FH | stn. 1<br>:<br>stn.□<br>Note1 | F18 | T0 T3<br>T1 T4<br>T2 T5 | Blank<br>-R Note2<br>-83 Note3 | -FJ Note5<br>-FJ5 Note5<br>-FJ6 Note5<br>-FM Note5<br>-FMH Note6 | Blank -CPS<br>-PN -CPL<br>-PS -CPS3<br>-PL -CPL3<br>-PS3 -39L Note4<br>-PL3 -39N Note4 | Blank<br>-NP8 Note7<br>-NP0 Note7<br>-NR8 Note7<br>-NR0 Note7 | DC24V<br>DC12V<br>AC100V Note7<br>AC120V<br>AC240V Note3 |
| | | | | | BP (for block-off plate) | | | | | |

Notes: 1. Valve mounting location is from the left, with the solenoid on top, and the 4(A), 2(B) ports side in front.
2. When the valve specification is **T1** or **T2**, the manual override lever is placed only on the A side. This is not available with **-39□**.
3. Only for wiring specification **-39□**.
4. Not available for valve specification **T1**. In addition, the valve is used only as a double solenoid for **T2**.
5. Can be selected only when the manifold type is **F**.
6. Can be selected only when the manifold type is **FH**.
7. Not available with DIN connectors (**-39□**).

Remarks: 1. The external pilot valve cannot be mounted on the F type manifold.
2. Negative common specifications are also available as made to order products (add **-129W** to the ends of the valve and manifold model order codes). For details, consult us.

## Gasket (gasket and exhaust valve)

**F18 Z - GS1**

## Block-off plate (block-off plate and 2 mounting screws)

**F18 BP**

## Individual air supply and exhaust spacer (Spacer for non-plug-in type, gasket, exhaust valve, and 2 mounting screws)

**F18 Z - □**

**Specification**
**NP8 :** Individual air supply spacer (with $\phi$ 8 fitting)
**NP0 :** Individual air supply spacer (with $\phi$ 10 fitting)
**NR8 :** Individual exhaust spacer (with $\phi$ 8 fitting)
**NR0 :** Individual exhaust spacer (with $\phi$ 10 fitting)

※For details, see p. 25.
※Not available with DIN connectors (**-39**□).

## Muffler

**KM - J □**

**Fitting size**
**8:** Outer diameter $\phi$ 8 (for individual exhaust spacer)
**10:** Outer diameter $\phi$ 10 (for individual exhaust spacer)
(Sales unit: Set of 10 mufflers)

## Connector-related order codes

**FZ□ - □**

**Valve specification**
**Blank:** For **T1, T2, T3, T4, T5**
**0:** For **T0**

**Connector specification**
**CP** : Connector, lead wire length 300 mm [11.8 in.]
**CP3** : Connector, lead wire length 3000 mm [118 in.]
**CLN** : Connector without lead wire (short bar and contacts included)
**PA** : Positive common A type, lead wire length 300 mm [11.8 in.]※
**PA3** : Positive common A type, lead wire length 3000 mm [118 in.]※
**PB** : Positive common B type, lead wire length 300 mm [11.8 in.]※
**PB3** : Positive common B type, lead wire length 3000 mm [118 in.]※
**PC** : Positive common C type, lead wire length 300 mm [11.8 in.]※
**PC3** : Positive common C type, lead wire length 3000 mm [118 in.]※
**CC1.5** : Cabtyre cable, length 1500 mm [59 in.]Note ※
**CC3** : Cabtyre cable, length 3000 mm [118 in.]Note ※

※For details, see p. 19.
Note: Not available for **T0**

### ● Common connector assembly

**A type: FZ-PA□※**

Red Common wire (+)
Black A side (−)
White B side (−) (Insert when using as double solenoid) Note

**B type: FZ-PB□※**

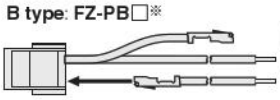

Red Common wire (+)
Black A side (−)
White B side (−) (Insert when using as double solenoid) Note

**C type: FZ-PC□※**

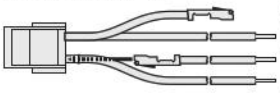

Red Common wire (+)
Black A side (−)
White B side (−) (Insert when using as double solenoid) Note
Red Common wire (+)

※ Lead wire length **Blank:** 300 mm [11.8 in.]
**3:** 3000 mm [118 in.]

Note: White lead wire is not available for **FZ0-P□□**.

## Manifold Order Code Example

(4 units of F18 Series)

**F18M4F**

| | |
|---|---|
| **stn.1～2** | **F18T0-FJ5-PS DC24V** |
| **stn.3** | **F18T2-FJ6-PS DC24V** |
| **stn.4** | **F18BP** |

## Precautions for Order Codes

**● Orders for valves only**
Place orders from "F18 Series Single Valve Unit Order Codes" on p. 72.
Select from valve outlet types **-FJ, -FJ5, -FJ6,** or **-FM□.** In addition, for common terminal wiring connections, order the common connector assemblies listed above separately.

## F18 Series Split Manifold Non-Plug-in Type Order Codes

### ■ Valve size

**F18M**

18 mm [0.709 in.] width

### ■ Manifold outlet specification

With dual use fitting blocks (base piping type)

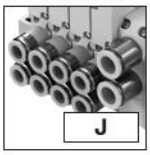


**Outlet port fitting**
φ8, φ10

With selectable fittings (base piping type)

**Outlet port should be selected in accordance with the manifold fitting specification.**

With female thread blocks (base piping type)

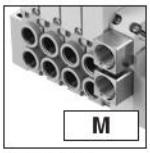


**Outlet port female thread**
Rc1/4

With plates (direct piping type)

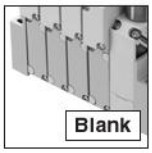


### ■ Pilot specification

**Blank**

Internal pilot manifold

**G**

External pilot manifold

### ■ Piping block specification (air supply and exhaust)

**Fitting block**

**-JR** : Fitting block, right-side mounting Note7
**-JL** : Fitting block, left-side mounting Note7
**-JD** : Fitting block, both-side mounting Note7

Fitting size (1(P), 3, 5(R) ports), φ12

**Female thread block**

**-MR** : Female thread, right-side mounting Note7
**-ML** : Female thread, left-side mounting Note7
**-MD** : Female thread, both-side mounting Note7

Female thread size (1(P), 3, 5(R) ports), Rc3/8

**Female thread block**

**-MRH** : Female thread, right-side mounting Note8
**-MLH** : Female thread, left-side mounting Note8
**-MDH** : Female thread, both-side mounting Note8

Female thread size (1(P), 3, 5(R) ports), NPT3/8

| | Valve size | Valve units | Manifold type | Manifold outlet specification | Pilot specification | Piping block specification |
|---|---|---|---|---|---|---|
| | Manifold model | | | | | |
| Base piping type | F18M | 2<br>:<br>20 | N | J<br>M | Blank<br>G | -JR -MR<br>-JL -ML<br>-JD -MD |
| Base piping type selectable fitting | | | N<br>NH | L | Blank<br>G | -JR Note7 -MR Note7 -MRH Note8<br>-JL Note7 -ML Note7 -MLH Note8<br>-JD Note7 -MD Note7 -MDH Note8 |
| Direct piping type | | | | Blank | Blank<br>G | -JR Note7 -MR Note7 -MRH Note8<br>-JL Note7 -ML Note7 -MLH Note8<br>-JD Note7 -MD Note7 -MDH Note8 |

Remark: Negative common specifications are also available as made to order products (add **-129W** to the ends of the valve and manifold model order codes). For details, consult us.

### Valve specification

**T0** : 2-position, for single solenoid only
**T1** : 2-position, single solenoid specification
**T2** : 2-position, double solenoid specification
**T3** : 3-position, closed center
**T4** : 3-position, exhaust center
**T5** : 3-position, pressure center

### Valve outlet type

**-A1** With plate Note3 (base piping type)

**-FJ** With dual use $\phi$ 8, $\phi$10 fitting block Note7 (direct piping type)

**-FJ5** With single use $\phi$ 8 fitting block Note7 (direct piping type)

**-FJ6** With single use $\phi$ 10 fitting block Note7 (direct piping type)

**-FM** With Rc1/4 female thread block Note7 (direct piping type)

**-FMH** With NPT1/4 female thread block Note8 (direct piping type)

### Wiring specification

S type plug connector
Without connector

S type plug connector
Lead wire 300 mm※

S type plug connector
Lead wire 3000 mm※

Pre-wired positive common terminal
S type plug connector
Lead wire 300 mm※

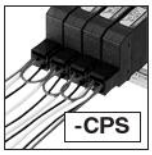


Pre-wired positive common terminal
S type plug connector
Lead wire 3000 mm※

※300 mm = 11.8 in.
3000 mm = 118 in.

### Manifold fitting specification

**-J5** With single use $\phi$ 8 fitting block Note7 (base piping type)

**-J6** With single use $\phi$ 10 fitting block Note7 (base piping type)

**-MH** With NPT1/4 female thread block Note8 (base piping type)

### Operation type

**Blank**
Internal pilot type Note5

**G**
External pilot type Note6
(for positive pressure)
※No vacuum valve can be mounted.

### Manual override

Manual override button

Manual override lever Note2

### Individual air supply and exhaust spacer

**Blank** : No spacer
**-NP8** : Individual air supply spacer (with $\phi$ 8 fitting)
**-NP0** : Individual air supply spacer (with $\phi$ 10 fitting)
**-NR8** : Individual exhaust spacer (with $\phi$ 8 fitting)
**-NR0** : Individual exhaust spacer (with $\phi$ 10 fitting)
For details, see p. 25.

### Port isolator

**Blank** : No port isolator
**-SP** : For 1(P) port Note4
**-SR** : For 3(R2), 5(R1) ports Note4
**-SA** : For 1(P), 3(R2), and 5(R1) ports Note4

| Station | Valve size | Valve specification | Operation type | Manual override | Valve outlet type | Wiring specification | Manifold fitting specification | Individual air supply and exhaust spacer | Port isolator | Voltage |
|---|---|---|---|---|---|---|---|---|---|---|
| Mounting valve model | | | | | | | | | | |
| stn. 1 ⋮ stn.□ Note1 | F18 | T0 T3<br>T1 T4<br>T2 T5 | Blank Note5<br>G Note6 | Blank<br>-R Note2 | -A1 Note3 | -PN<br>-PS<br>-PS3<br>-CPS<br>-CPS3 | | Blank<br>-NP8 -NR8<br>-NP0 -NR0 | Blank<br>-SP Note4<br>-SR Note4<br>-SA Note4 | DC24V<br>DC12V<br>AC100V<br>AC120V |
| | | BPN (for block-off plate) | | | | | | | | |
| stn. 1 ⋮ stn.□ Note1 | F18 | T0 T3<br>T1 T4<br>T2 T5 | Blank Note5<br>G Note6 | Blank<br>-R Note2 | -A1 Note3 | -PN<br>-PS<br>-PS3<br>-CPS<br>-CPS3 | -J5 Note7<br>-J6 Note7<br>-MH Note8 | Blank<br>-NP8 -NR8<br>-NP0 -NR0 | Blank<br>-SP Note4<br>-SR Note4<br>-SA Note4 | DC24V<br>DC12V<br>AC100V<br>AC120V |
| | | BPN (for block-off plate) | | | | | | | | |
| stn. 1 ⋮ stn.□ Note1 | F18 | T0 T3<br>T1 T4<br>T2 T5 | Blank Note5<br>G Note6 | Blank<br>-R Note2 | -FJ Note7<br>-FJ5 Note7<br>-FJ6 Note7<br>-FM Note7<br>-FMH Note8 | -PN<br>-PS<br>-PS3<br>-CPS<br>-CPS3 | | Blank<br>-NP8 -NR8<br>-NP0 -NR0 | Blank<br>-SP Note4<br>-SR Note4<br>-SA Note4 | DC24V<br>DC12V<br>AC100V<br>AC120V |
| | | BPN (for block-off plate) | | | | | | | | |

Notes:
1. Valve mounting location is from the left, with the solenoid on top, and the 4(A), 2(B) ports side in front.
2. When the valve specification is **T1** or **T2**, the manual override lever is placed only on the A side.
3. When selecting **J, M**, or **L** (base piping type) for the manifold outlet specification, always enter **-A1** (with plate) for the valve outlet type.
4. Port isolators can be installed only when piping blocks are mounted on both sides. In addition, only 1 port isolator can be mounted in 1 manifold for **-SA**, or 1 each port isolator for **-SP** and **-SR** for a total of 2 locations. When shipping, the designated port isolators are mounted between the designated station and the station to its immediate left (the next smaller stn. No.).
5. Cannot be mounted on the external pilot manifold.
6. Cannot be mounted on the internal pilot manifold.
7. Can be selected only when the manifold type is **N**.
8. Can be selected only when the manifold type is **NH**.

# F18 Series Split Manifold Non-Plug-in Type Additional Parts Order Codes

## Parts for manifold

**F18 Z - □**

**Parts content**
**GS2 :** Gasket (gasket and exhaust valve)
**SP :** Port isolator (for 1(P) port)
**SR :** Port isolator (for 3(R2), 5(R1) ports)
**SA :** Port isolator (for 1(P), 3(R2), 5(R1) ports)

## Block-off plate (block-off plate, 2 mounting screws)

**F18 BP N**

**For non-plug-in type**

## Connector-related order codes

**FZ□ - □**

300 mm = 11.8 in.
1500 mm = 59 in.
3000 mm = 118 in.

**Valve specification**
**Blank:** For **T1, T2, T3, T4, T5**
**0:** For **T0**

※For details, see p. 19.

**Connector specification**
**CP** : Connector, lead wire length 300 mm
**CP3** : Connector, lead wire length 3000 mm
**CLN** : Connector without lead wire (short bar, contacts included)
**PA** : Positive common A type, lead wire length 300 mm ※
**PA3** : Positive common A type, lead wire length 3000 mm ※
**PB** : Positive common B type, lead wire length 300 mm ※
**PB3** : Positive common B type, lead wire length 3000 mm ※
**PC** : Positive common C type, lead wire length 300 mm ※
**PC3** : Positive common C type, lead wire length 3000 mm ※
**CC1.5** : Cabtyre cable, length 1500 mm Note ※
**CC3** : Cabtyre cable, length 3000 mm Note ※

Note: Not available for **T0**

### ● Common connector assembly

**A type: FZ-PA□※**

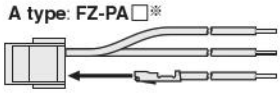

Red Common wire (+)
Black A side (–)
White B side (–) (Insert when using as double solenoid) Note

**B type: FZ-PB□※**

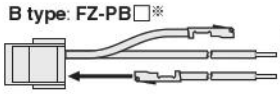

Red Common wire (+)
Black A side (–)
White B side (–) (Insert when using as double solenoid) Note

**C type: FZ-PC□※**

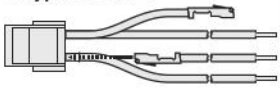

Red Common wire (+)
Black A side (–)
White B side (–) (Insert when using as double solenoid) Note
Red Common wire (+)

※ Lead wire length **Blank:** 300 mm [11.8 in.]
**3:** 3000 mm [118 in.]

Note: White lead wire is not available for **FZ0-P□□**.

## Valve base assembly (valve base and gasket)

**F18 Z - □**

**Piping specification**
**VJ :** Dual use fitting valve base
**VJ5 :** Single use $\phi$8 fitting valve base
**VJ6 :** Single use $\phi$10 fitting valve base
**VM :** Rc1/4 female thread valve base
**VMH :** NPT1/4 female thread valve base
**VP :** Valve base plate

## Piping block assembly

**F18 Z □ - □**

**Piping specification**
**PJ :** Fitting piping block
**PM :** Rc3/8 female thread piping block
**PMH :** NPT3/8 female thread piping block

**Pilot specification**
**Blank :** Internal pilot
**G :** External pilot

## End blocks (one set of left and right)

**F18 Z - E**

## Individual air supply and exhaust spacer (Spacer for non-plug-in type, gasket, exhaust valve, and 2 mounting screws)

**F18 Z - □**

**Specification**
**NP8 :** Individual air supply spacer (with $\phi$8 fitting)
**NP0 :** Individual air supply spacer (with $\phi$10 fitting)
**NR8 :** Individual exhaust spacer (with $\phi$8 fitting)
**NR0 :** Individual exhaust spacer (with $\phi$10 fitting)

※For details, see p. 25.

## Muffler

**KM - J □**

**Fitting size**
**8:** Outer diameter $\phi$8 (for individual exhaust spacer)
**10:** Outer diameter $\phi$10 (for individual exhaust spacer)
**12:** Outer diameter $\phi$12
(Sales unit: Set of 10 mufflers)

## Connecting rod

**F18 Z - □ - □**

**Additional unit number**
**01～20 (01～04 for RH)**
※For reduction of units, consult us.

**Specification**
**RV :** For valve base
**RH :** For piping and wiring base

### Manifold Order Code Example

(4 units of F18 Series)

**F18M4NL-JR**

| | |
|---|---|
| **stn.1～2** | **F18T0-A1-PS-J5 DC24V** |
| **stn.3** | **F18T2-A1-PS-J6 DC24V** |
| **stn.4** | **F18BPN-J6** |

## Precautions for Order Codes

**● Orders for valves only**
Place orders from "F18 Series Single Valve Unit Order Codes" on p. 72. However, **Blank, A2□, F3, F4□, F5,** and **F6,** cannot be selected for the valve outlet type. And for the wiring specification, **Blank, PL**, and **PL3** cannot be selected. In addition, for common terminal wiring connections, separately order the common connector assemblies listed on the left.

# F18 Series Split Manifold Plug-in Type Order Codes

## ■ Manifold outlet specification

With dual use fitting blocks (base piping type)

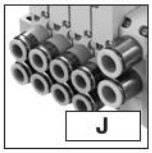


**Outlet port fitting**
φ8, φ10

With selectable fittings (base piping type)

**Outlet port should be selected in accordance with the manifold fitting specification.**

With female thread blocks (base piping type)

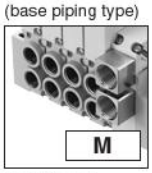


**Outlet port female thread**
Rc1/4

With plates (direct piping type)

## ■ Pilot specification

**Blank**
Internal pilot manifold

**G**
External pilot manifold

## ■ Piping block specification (air supply and exhaust)

**Fitting block**
- **-JR** : Fitting block, right-side mounting Note11
- **-JL** : Fitting block, left-side mounting Note11
- **-JD** : Fitting block, both-side mounting Note11

Fitting size (1(P), 3, 5(R) ports), φ12

**Female thread block**
- **-MR** : Female thread, right-side mounting Note11
- **-ML** : Female thread, left-side mounting Note11
- **-MD** : Female thread, both-side mounting Note11

Female thread size (1(P), 3, 5(R) ports), Rc3/8

**Female thread block**
- **-MRH** : Female thread, right-side mounting Note12
- **-MLH** : Female thread, left-side mounting Note12
- **-MDH** : Female thread, both-side mounting Note12

Female thread size (1(P), 3, 5(R) ports), NPT3/8

## ■ Wiring specification (wiring block)

Flat cable connector (with socket and strain relief)

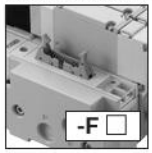


- **-F100** : 10-pin
- **-F101** : 10-pin
- **-F200** : 20-pin
- **-F201** : 20-pin
- **-F260** : 26-pin

For details, see p. 92-96.

D-sub connector

(M2.6 mounting screws)
- **-D250** : 25-pin Note11
- **-D251** : 25-pin Note11

(4-40UNC mounting screws)
- **-D250U** : 25-pin Note12
- **-D251U** : 25-pin Note12
- **-D370NU** : 37-pin, no-power terminal Note12

For details, see p. 92-96.

Terminal block (19 terminals, M3 screws)

Also can provide the terminal block with cover. Note3

## ■ Wiring connection specification

**Blank**
**Packed wiring:** Wiring is made in accordance with the mounted valve specifications.

**-W**
**Double wiring:** Wiring is always for the double solenoid, regardless of the specifications of the mounted valve.

## ■ Wiring position (wiring block)

- **Blank** : Left-side mounting
- **-R** : Right-side mounting

## ■ Valve size

**F18M**
18 mm [0.709 in.] width

| Valve size | Valve units | Manifold type | Manifold outlet specification | Pilot specification | Piping block specification | Wiring specification | Wiring connection specification | Wiring position | Voltage |
|---|---|---|---|---|---|---|---|---|---|
| Manifold model | | | | | | | | | |
| Base piping type | F18M | P | J<br>M | Blank<br>G | -JR -MR<br>-JL -ML<br>-JD -MD | -F100 -D250<br>-F101 -D251<br>-F200 -T200<br>-F201<br>-F260 | Blank<br>-W | Blank<br>-R | DC24V<br>DC12V<br>AC100V Note2<br>AC120V Note2 |
| Base piping type selectable fitting | F18M | P | L | Blank<br>G | -JR Note11 -MD Note11<br>-JL Note11 -MRH Note12<br>-JD Note11 -MLH Note12<br>-MR Note11 -MDH Note12<br>-ML Note11 | -F100 -D251 Note11<br>-F101 -D250U Note12<br>-F200 -D251U Note12<br>-F201 -D370NU Note12<br>-F260 -T200<br>-D250 Note11 | Blank<br>-W | Blank<br>-R | DC24V<br>DC12V<br>AC100V Note2<br>AC120V Note2 |
| Direct piping type | F18M | P | Blank | Blank<br>G | -JR Note11 -MD Note11<br>-JL Note11 -MRH Note12<br>-JD Note11 -MLH Note12<br>-MR Note11 -MDH Note12<br>-ML Note11 | -F100 -D251 Note11<br>-F101 -D250U Note12<br>-F200 -D251U Note12<br>-F201 -D370NU Note12<br>-F260 -T200<br>-D250 Note11 | Blank<br>-W | Blank<br>-R | DC24V<br>DC12V<br>AC100V Note2<br>AC120V Note2 |

Valve units: 2 ⋮ □ Note1

Notes: 1. For the maximum number of units, see the table for maximum number of valve units by wiring specification, on p. 84.
2. AC100V, AC120V is available only for the **-D250** □, **-D251** □, **-D370NU** (D-sub connector) and **-T200** (terminal block) wiring specifications.
3. The terminal block with cover is also available as a made to order product (add **-139W** to the end of the manifold model order code). For details, consult us.

Remark: Negative common specifications are also available as made to order products (add **-129W** to the ends of the valve and manifold model order codes). For details, consult us.

### Valve specification

**T0 :** 2-position, for single solenoid only
**T1 :** 2-position, single solenoid specification
**T2 :** 2-position, double solenoid specification
**T3 :** 3-position, closed center
**T4 :** 3-position, exhaust center
**T5 :** 3-position, pressure center

### Valve outlet type

**-A1** With plate Note5 (base piping type)

**-FJ** With dual use $\phi$ 8, $\phi$ 10 fitting block Note11 (direct piping type)

**-FJ5** With single use $\phi$ 8 fitting block Note11 (direct piping type)

**-FJ6** With single use $\phi$ 10 fitting block Note11 (direct piping type)

**-FM** With Rc1/4 female thread block Note11 (direct piping type)

**-FMH** With NPT1/4 female thread block Note12 (direct piping type)

### Manifold fitting specification

**-J5** With single use $\phi$ 8 fitting block Note11 (base piping type)

**-J6** With single use $\phi$ 10 fitting block Note11 (base piping type)

**-MH** With NPT1/4 female thread block Note12 (base piping type)

### Port isolator

**Blank :** No port isolator
**-SP :** For 1(P) port Note8
**-SR :** For 3(R2), 5(R1) ports Note8
**-SA :** For 1(P), 3(R2), 5(R1) ports Note8

### Operation type

**Blank**
Internal pilot type Note9

**G**
External pilot type Note10 (for positive pressure)
※ No vacuum valve can be mounted.

### Manual override

Manual override button

Manual override lever Note7

### Individual air supply and exhaust spacer

**Blank :** No spacer
**-PP8 :** Individual air supply spacer (with $\phi$ 8 fitting)
**-PP0 :** Individual air supply spacer (with $\phi$ 10 fitting)
**-PR8 :** Individual exhaust spacer (with $\phi$ 8 fitting)
**-PR0 :** Individual exhaust spacer (with $\phi$ 10 fitting)
For details, see p. 25.

| Station | Valve size | Valve specification | Operation type | Manual override | Valve outlet type | Manifold fitting specification | Individual air supply and exhaust spacer | Port isolator | Voltage |
|---|---|---|---|---|---|---|---|---|---|
| Mounting valve model | | | | | | | | | |
| stn. 1 ⋮ stn.□ Note4 | F18 | T0 T1 T2 T3 T4 T5 | Blank Note9 G Note10 | Blank -R Note7 | -A1 Note5 | | Blank -PP8 -PR8 -PP0 -PR0 | Blank -SP Note8 -SR Note8 -SA Note8 | DC24V DC12V AC100V Note2 AC120V Note2 |
| | | BPP (for block-off plate) Note6 | | | | | | | |
| stn. 1 ⋮ stn.□ Note4 | F18 | T0 T1 T2 T3 T4 T5 | Blank Note9 G Note10 | Blank -R Note7 | -A1 Note5 | -J5 Note11 -J6 Note11 -MH Note12 | Blank -PP8 -PR8 -PP0 -PR0 | Blank -SP Note8 -SR Note8 -SA Note8 | DC24V DC12V AC100V Note2 AC120V Note2 |
| | | BPP (for block-off plate) Note6 | | | | | | | |
| stn. 1 ⋮ stn.□ Note4 | F18 | T0 T1 T2 T3 T4 T5 | Blank Note9 G Note10 | Blank -R Note7 | -FJ Note11 -FJ5 Note11 -FJ6 Note11 -FM Note11 -FMH Note12 | | Blank -PP8 -PR8 -PP0 -PR0 | Blank -SP Note8 -SR Note8 -SA Note8 | DC24V DC12V AC100V Note2 AC120V Note2 |
| | | BPP (for block-off plate) Note6 | | | | | | | |

Notes:
4. Valve mounting location is from the left, with the solenoid on top, and the 4(A), 2(B) ports side in front.
5. When selecting **J**, **M**, or **L** (base piping type) for the manifold outlet specification, always enter **-A1** (with plate) for the valve outlet type.
6. Caution should be exercised that the block-off plate wiring is always double wiring (allocated 2 control pins at 1 stn.), regardless of the wiring connection specification. For wiring for a single solenoid, see p. 85.
7. When the valve specification is **T1** or **T2**, the manual override lever is placed only on the A side.
8. Port isolators can be installed only when piping blocks are mounted on both sides. In addition, only 1 port isolator can be mounted in 1 manifold for **-SA**, or 1 each port isolator for **-SP** and **-SR** for a total of 2 locations. When shipping, the designated port isolators are mounted between the designated station and the station to its immediate left (the next smaller stn. No.).
9. Cannot be mounted on the external pilot manifold.
10. Cannot be mounted on the internal pilot manifold.
11. Can be selected only when the manifold type is **P**.
12. Can be selected only when the manifold type is **PH**.

## Parts for manifold

**F18 Z - □**

**Parts content**
**GS2 :** Gasket (gasket and exhaust valve)
**SP :** Port isolator (for 1(P) port)
**SR :** Port isolator (for 3(R2), 5(R1) ports)
**SA :** Port isolator (for 1(P), 3(R2), 5(R1) ports)

## Block-off plate (block-off plate, 2 mounting screws, and plug)

**F18 BP P**

**For plug-in type**

## Valve base assembly (valve base, gasket, lead wire, and plug-in connector)

**F18 Z - □ - □**

**Wiring specification**
**D:** For D-sub connector
**F:** For flat cable connector, terminal block

**Piping specification**
**VJ :** Dual use fitting valve base
**VJ5 :** Single use $\phi$8 fitting valve base
**VJ6 :** Single use $\phi$10 fitting valve base
**VM :** Rc1/4 female thread valve base
**VMH :** NPT1/4 female thread valve base
**VP :** Valve base plate

## Piping block assembly

**F18 Z □ - □**

**Piping specification**
**PJP :** Fitting piping block
**PMP :** Rc3/8 female thread piping block
**PMPH :** NPT3/8 female thread piping block

**Pilot specification**
**Blank :** Internal pilot
**G :** External pilot

## End blocks (one set of left and right)

**F18 Z - EP**

## Wiring block assembly (one set)

**F18 Z - □ - □**

**Voltage (Not required for T200)**
**DC24**
**DC12**
**AC100** (for **D250** □, **D251**□, **D370NU** only)

**Piping specification**
**F100 :** Flat cable connector (DC specification)
**F101 :** Flat cable connector (DC specification)
**F200 :** Flat cable connector (DC specification)
**F201 :** Flat cable connector (DC specification)
**F260 :** Flat cable connector (DC specification)
**D250 :** D-sub connector (M2.6 screws)
**D251 :** D-sub connector (M2.6 screws)
**D250U :** D-sub connector (4-40UNC screws)
**D251U :** D-sub connector (4-40UNC screws)
**D370NU :** D-sub connector (4-40UNC screws), without power terminal
**T200L :** Terminal block for left-side mounting
**T200R :** Terminal block for right-side mounting

## Individual air supply and exhaust spacer (Spacer for plug-in type, gasket, exhaust valve, and 2 mounting screws)

**F18 Z - □**

**Specification**
**PP8 :** Individual air supply spacer (with $\phi$8 fitting)
**PP0 :** Individual air supply spacer (with $\phi$10 fitting)
**PR8 :** Individual exhaust spacer (with $\phi$8 fitting)
**PR0 :** Individual exhaust spacer (with $\phi$10 fitting)

※For details, see p. 25.

## Muffler

**KM - J □**

**Fitting size**
**8:** Outer diameter $\phi$8 (for individual exhaust spacer)
**10:** Outer diameter $\phi$10 (for individual exhaust spacer)
**12:** Outer diameter $\phi$12
(Sales unit: Set of 10 mufflers)

## Connecting rod

**F18 Z - □ - □**

**Number of additional units**
**01～20 (01～04 for RH)**
※Example: To add 2 valve units, enter **-02**.
※For reduction of units, consult us.

**Specification**
**RV :** For valve base
**RH :** For piping and wiring base

### ■ Table for maximum number of valve units by wiring specification

| Wiring specification | Max. outputs | Maximum number of units — Wiring connection specification: Packed wiring (**Blank**) | Maximum number of units — Wiring connection specification: Double wiring (**-W**) |
|---|---|---|---|
| **F100** Flat cable (10P) | 8 | Varies depending on the number of mounted single solenoids, double solenoids, and block-off plates. The number of controlled solenoids should be designated as the maximum number of outputs or less. **D370NU** is a maximum of 20 units. | 4 units |
| **F101** Flat cable (10P) | 8 | | 4 units |
| **F200** Flat cable (20P) | 16 | | 8 units |
| **F201** Flat cable (20P) | 16 | | 8 units |
| **F260** Flat cable (26P) | 20 | | 10 units |
| **D250** □ D-sub connector (25P) | 16 | | 8 units |
| **D251** □ D-sub connector (25P) | 20 | | 10 units |
| **D370NU** D-sub connector (37P) | 32 | | 16 units |
| **T200** Terminal block (19 terminals) | 18 | | 9 units |

## Manifold Order Code Example

(12 units of F18 Series)

**F18M12PL-JR-F201 DC24V**

**stn.1～8 F18T0-A1-J5 DC24V**
**stn.9～11 F18T2-A1-J6 DC24V**
**stn.12 F18BPP-J6**

## Precautions for Order Codes

● **Orders for valves only**

Place orders from "F18 Series Single Valve Unit Order Codes" on p. 72.
However, **Blank, A2□, F3, F4□, F5,** and **F6** cannot be selected for the valve outlet type. For the wiring specification, **Blank** is the only selection.

● **Wiring connection specification**

**Blank** (packed wiring): Wiring is made in accordance with the mounted valve specifications.
**-W** (double wiring): Wiring is always for the double solenoid, regardless of the specifications of the mounted valve.

**Caution**

Caution should be exercised that the block-off plate wiring is always double wiring (allocated 2 control pins at 1 stn.), regardless of the wiring connection specification.
The block-off plate wiring can be made as wiring for a single solenoid. Add **-1W** to the end of the block-off plate order code in the case.
For details, consult us.

# F18 Series Serial Transmission Compatible Manifold Order Codes

## ■ Manifold outlet specification

With dual use fitting blocks (base piping type)

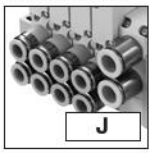


**Outlet port fitting**
φ8, φ10

With selectable fittings (base piping type)

**Outlet port should be selected in accordance with the manifold fitting specification.**

With female thread blocks (base piping type)

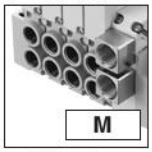


**Outlet port female thread**
Rc1/4

With plates (direct piping type)

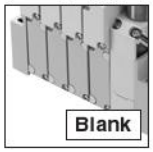


## ■ Pilot specification

**Blank**
Internal pilot manifold

**G**
External pilot manifold

## ■ Piping block specification (air supply and exhaust)

**Fitting block**
**-JR** : Fitting block, right-side mounting Note10
**-JL** : Fitting block, left-side mounting Note10
**-JD** : Fitting block, both-side mounting Note10
Fitting size (1(P), 3, 5(R) ports), φ12

**Female thread block**
**-MR** : Female thread, right-side mounting Note10
**-ML** : Female thread, left-side mounting Note10
**-MD** : Female thread, both-side mounting Note10
Female thread size (1(P), 3, 5(R) ports), Rc3/8

**Female thread block**
**-MRH** : Female thread, right-side mounting Note11
**-MLH** : Female thread, left-side mounting Note11
**-MDH** : Female thread, both-side mounting Note11
Female thread size (1(P), 3, 5(R) ports), NPT3/8

## ■ Transmission block specification

※ These are the serial transmission block specifications compatible with each system.

● Block photoed on right is compatible with CompoNet.
For details, see p. 37, 40.

**-31** : For OMRON B7A Link Terminal (standard)
**-32** : For OMRON B7A Link Terminal (high speed)
**-A1** : For OMRON CompoBus/S (16 outputs)
**-B1** : For CC-Link (16 outputs)
**-H1** : For CompoNet (16 outputs) Note2

## ■ Wiring connection specification

**Blank**
**Packed wiring:** Wiring is made in accordance with the mounted valve specifications.

**-W**
**Double wiring:** Wiring is always for the double solenoid, regardless of the specifications of the mounted valve.

## ■ Wiring position (transmission block)

**Blank** : Left-side mounting
**-R** : Right-side mounting Note2

## ■ Valve size

**F18M**
18 mm [0.709 in.] width

| | Valve size | Valve units | Manifold type | Manifold outlet specification | Pilot specification | Piping block specification | Transmission block specification | Wiring connection specification | Wiring position |
|---|---|---|---|---|---|---|---|---|---|
| | Manifold model | | | | | | | | |
| Base piping type | F18M | 2 ⋮ □ Note1 | S | J<br>M | Blank<br>G | -JR -MR<br>-JL -ML<br>-JD -MD | -31 -A1<br>-32 -B1<br>-H1 Note2 | Blank<br>-W | Blank<br>-R Note2 |
| Base piping type selectable fitting | | | S<br>SH | L | Blank<br>G | -JR Note10 -MD Note10<br>-JL Note10 -MRH Note11<br>-JD Note10 -MLH Note11<br>-MR Note10 -MDH Note11<br>-ML Note10 | -31 -A1<br>-32 -B1<br>-H1 Note2 | Blank<br>-W | Blank<br>-R Note2 |
| Direct piping type | | | | Blank | Blank<br>G | -JR Note10 -MD Note10<br>-JL Note10 -MRH Note11<br>-JD Note10 -MLH Note11<br>-MR Note10 -MDH Note11<br>-ML Note10 | -31 -A1<br>-32 -B1<br>-H1 Note2 | Blank<br>-W | Blank<br>-R Note2 |

Notes: 1. To determine the maximum number of units, see the table for maximum number of valve units by transmission block specification, on p. 88.
2. The **-H1** (for CompoNet (16 outputs)) transmission block is mountable on the left side only.

## Valve specification

**T0 :** 2-position, for single solenoid only
**T1 :** 2-position, single solenoid specification
**T2 :** 2-position, double solenoid specification
**T3 :** 3-position, closed center
**T4 :** 3-position, exhaust center
**T5 :** 3-position, pressure center

## Valve outlet type

**-A1** With plate Note4 (base piping type)

**-FJ** With dual use $\phi$ 8, $\phi$ 10 fitting block Note10 (direct piping type)

**-FJ5** With single use $\phi$ 8 fitting block Note10 (direct piping type)

**-FJ6** With single use $\phi$ 10 fitting block Note10 (direct piping type)

**-FM** With Rc1/4 female thread block Note10 (direct piping type)

**-FMH** With NPT1/4 female thread block Note11 (direct piping type)

## Manifold fitting specification

**-J5** With single use $\phi$ 8 fitting block Note10 (base piping type)

**-J6** With single use $\phi$ 10 fitting block Note10 (base piping type)

**-MH** With NPT1/4 female thread block Note11 (base piping type)

## Port isolator

**Blank :** No port isolator
**-SP :** For 1(P) port Note7
**-SR :** For 3(R2), 5(R1) ports Note7
**-SA :** For 1(P), 3(R2), 5(R1) ports Note7

## Operation type

**Blank**
Internal pilot type Note8

**G**
External pilot type Note9 (for positive pressure)
※ No vacuum valve can be mounted.

## Manual override

Manual override button

Manual override lever Note6

## Individual air supply and exhaust spacer

**Blank :** No spacer
**-PP8 :** Individual air supply spacer (with $\phi$ 8 fitting)
**-PP0 :** Individual air supply spacer (with $\phi$ 10 fitting)
**-PR8 :** Individual exhaust spacer (with $\phi$ 8 fitting)
**-PR0 :** Individual exhaust spacer (with $\phi$ 10 fitting)
For details, see p. 25.

| Station | Valve size | Valve specification | Operation type | Manual override | Valve outlet type | Manifold fitting specification | Individual air supply and exhaust spacer | Port isolator | Voltage |
|---|---|---|---|---|---|---|---|---|---|
| Mounting valve model | | | | | | | | | |
| stn. 1 ⋮ stn.□ Note3 | F18 | T0 T1 T2 T3 T4 T5 | Blank Note8 G Note9 | Blank -R Note6 | -A1 Note4 | | Blank -PP8 -PR8 -PP0 -PR0 | Blank -SP Note7 -SR Note7 -SA Note7 | DC24V |
| | | BPP (for block-off plate) Note5 | | | | | | | |
| stn. 1 ⋮ stn.□ Note3 | F18 | T0 T1 T2 T3 T4 T5 | Blank Note8 G Note9 | Blank -R Note6 | -A1 Note4 | -J5 Note10 -J6 Note10 -MH Note11 | Blank -PP8 -PR8 -PP0 -PR0 | Blank -SP Note7 -SR Note7 -SA Note7 | DC24V |
| | | BPP (for block-off plate) Note5 | | | | | | | |
| stn. 1 ⋮ stn.□ Note3 | F18 | T0 T1 T2 T3 T4 T5 | Blank Note8 G Note9 | Blank -R Note6 | -FJ Note10 -FJ5 Note10 -FJ6 Note10 -FM Note10 -FMH Note11 | | Blank -PP8 -PR8 -PP0 -PR0 | Blank -SP Note7 -SR Note7 -SA Note7 | DC24V |
| | | BPP (for block-off plate) Note5 | | | | | | | |

Notes:
3. Valve mounting location is from the left, with the solenoid on top, and the 4(A), 2(B) ports side in front.
4. When selecting **J**, **M**, or **L** (base piping type) for the manifold outlet specifications, always enter **-A1** (with plate) for the valve outlet type.
5. Caution should be exercised that the block-off plate wiring is always double wiring (allocated 2 control pins at 1 stn.), regardless of the wiring connection specification. For wiring for a single solenoid, see p. 88.
6. When the valve specification is **T1** or **T2**, the manual override lever is placed only on the A side.
7. Port isolators can be installed only when piping blocks are mounted on both sides. In addition, only 1 port isolator can be mounted in 1 manifold for **-SA**, or 1 each port isolator for **-SP** and **-SR** for a total of 2 locations. When shipping, the designated port isolators are mounted between the designated station and the station to its immediate left (the next smaller stn. No.).
8. Cannot be mounted on the external pilot manifold.
9. Cannot be mounted on the internal pilot manifold.
10. Can be selected only when the manifold type is **S**.
11. Can be selected only when the manifold type is **SH**.

## F18 Series Serial Transmission Compatible Manifold Additional Parts Order Codes

### Parts for manifold

**F18 Z - □**

**Parts content**
**GS2 :** Gasket (gasket and exhaust valve)

### Block-off plate (block-off plate, 2 mounting screws, and plug)

**F18 BPP**

### Individual air supply and exhaust spacer (Spacer for plug-in type, gasket, exhaust valve, and 2 mounting screws)

**F18 Z - □**

**Specification**
**PP8 :** Individual air supply spacer (with $\phi$8 fitting)
**PP0 :** Individual air supply spacer (with $\phi$10 fitting)
**PR8 :** Individual exhaust spacer (with $\phi$8 fitting)
**PR0 :** Individual exhaust spacer (with $\phi$10 fitting)

※For details, see p. 25.

### Serial transmission block (single unit)

**YS2 □ □**

**Wiring position**
**S :** For integrated type, left-side mounting
**T :** For integrated type, right-side mounting

**Transmission block specification**
**31 :** For OMRON B7A Link Terminal (standard)
**32 :** For OMRON B7A Link Terminal (high speed)
**A1 :** For OMRON CompoBus/S (16 outputs)
**B1 :** For CC-Link (16 outputs)

**YS5H1U** — For CompoNet (16 outputs)
※DIN rail included (length 75 mm [2.95 in.])

### Muffler

**KM - J □**

**Fitting size**
**8:** Outer diameter $\phi$8 (for individual exhaust spacer)
**10:** Outer diameter $\phi$10 (for individual exhaust spacer)
**12:** Outer diameter $\phi$12
(Sales unit: Set of 10 mufflers)

### ■ Table for maximum number of valve units by transmission block specification

| Transmission block specifications | Max. outputs | Maximum number of units — Wiring connection specification: Packed wiring (**Blank**) | Maximum number of units — Wiring connection specification: Double wiring (**-W**) |
|---|---|---|---|
| **-31 :** For OMRON B7A Link Terminal (standard) | 16 | Varies depending on the number of mounted single solenoids, double solenoids, and block-off plates. The number of controlled solenoids should be designated as the maximum number of outputs or less. | 8 units |
| **-32 :** For OMRON B7A Link Terminal (high speed) | 16 | | 8 units |
| **-A1 :** For OMRON CompoBus/S (16 outputs) | 16 | | 8 units |
| **-B1 :** For CC-Link (16 outputs) | 16 | | 8 units |
| **-H1 :** For CompoNet (16 outputs) | 16 | | 8 units |

### Manifold Order Code Example

(8 units of F18 Series)

**F18M8SL-JR-B1-W**

**stn.1～5** **F18T0-A1-J5 DC24V**
**stn.6～7** **F18T2-A1-J6 DC24V**
**stn.8** **F18BPP-J6**

### Precautions for Order Codes

● **Orders for valves only**
Place orders from "F18 Series Single Valve Unit Order Codes" on p. 72.
However, **Blank, A2□, F3, F4□, F5,** and **F6,** cannot be selected for the valve outlet type. For the wiring specification, **Blank** is the only selection.

● **Wiring connection specification**
**Blank** (packed wiring): Wiring is made in accordance with the mounted valve specifications.
**-W** (double wiring): Wiring is always for the double solenoid, regardless of the specifications of the mounted valve.

**Caution**

Caution should be exercised that the block-off plate wiring is always double wiring (allocated 2 control pins at 1 stn.), regardless of the wiring connection specification. The block-off plate wiring can be made as wiring for a single solenoid. Add **-1W** to the end of the block-off plate order code in the case.
For details, consult us.

## PC Board Manifold Pin Locations by Wiring Specification (Top View)

### Flat cable connector (20-pin)

● **-F200** (Maximum number of control pins: 16)

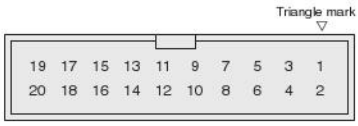


1 ～ 16 : Control pins
17, 18 : ( − ) pins (Short-circuited inside)
19, 20 : ( ＋ ) pins (Short-circuited inside)

● **-F201** (Maximum number of control pins: 16)

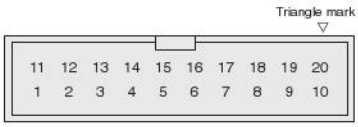


1 ～ 8 : Control pins
11 ～ 18 : Control pins
9, 19 : ( − ) pins (Short-circuited inside)
10, 20 : ( ＋ ) pins (Short-circuited inside)
Caution : Connector pin numbers are assigned for the sake of convenience.
Use the ▽ mark as the reference.
Remark : The **-F201** corresponds to Koganei's pin locations for the PC wiring system (wire-saving unit). For details, see the Valves General Catalog.

● Various dedicated cable assemblies are available.
See p. 103, 104 for details.

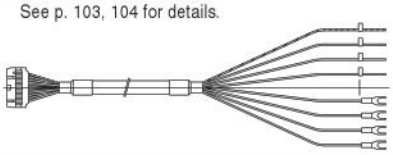

Remark: Socket and strain relief for flat cable are included at shipping.
※ For the relationship between the pin No. (terminal No.) and the corresponding solenoid, see p.91.

## Detailed Diagram of Wiring System

● **Positive common**

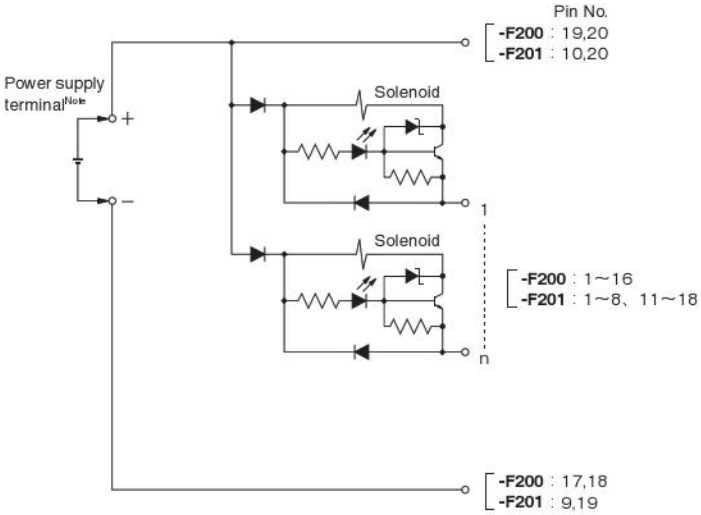


Note: For connecting a power line to the PC board manifold power terminal, see the "PC Board Manifold" precautions on p.21.
Remark: The internal circuit is of the standard type. For details of the low-current type, see p.20, 21.

## Pin No. and Corresponding Solenoid (For PC Board Manifold A Type and F Type)

The examples below show the relationship between the PC board manifold pin No. and the corresponding solenoid.
All the mounting examples show cases of the maximum number of control pins used.

### Flat cable connector (20-pin)

● In the case of wiring specification **-F200** (Maximum number of control pins: 16)

**Example 1**

**F10M16APJ-F200-S stn.1 ～ 15 F10T1-A1-PP DC24V**
**stn.16 F10BPC**

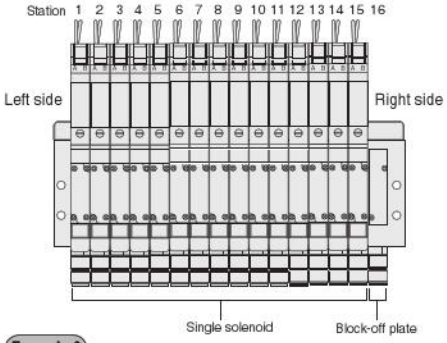


Number of units : 16 units
Wiring specification : **-F200**
Wiring connection specification : **-S** (single wiring)

(Top View) Triangle mark ▽

| | | | | | | | | | |
|---|---|---|---|---|---|---|---|---|---|
| 19 | 17 | 15 | 13 | 11 | 9 | 7 | 5 | 3 | 1 |
| 20 | 18 | 16 | 14 | 12 | 10 | 8 | 6 | 4 | 2 |

| Pin No. | 19 | 17 | 15 | 13 | 11 | 9 | 7 | 5 | 3 | 1 |
|---|---|---|---|---|---|---|---|---|---|---|
| Valve No. | + | − | 15A | 13A | 11A | 9A | 7A | 5A | 3A | 1A |
| Pin No. | 20 | 18 | 16 | 14 | 12 | 10 | 8 | 6 | 4 | 2 |
| Valve No. | + | − | 16A | 14A | 12A | 10A | 8A | 6A | 4A | 2A |

**Example 2**

**F10M8APJ-F200-W stn.1 ～ 4 F10T1-A1-PP DC24V**
**stn.5 ～ 7 F10T2-A1-PP DC24V**
**stn.8 F10BPC**

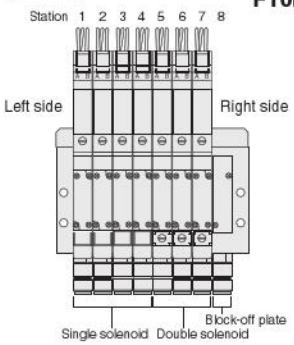


Number of units : 8 units
Wiring specification : **-F200**
Wiring connection specification : **-W** (double wiring)

(Top View) Triangle mark ▽

| | | | | | | | | | |
|---|---|---|---|---|---|---|---|---|---|
| 19 | 17 | 15 | 13 | 11 | 9 | 7 | 5 | 3 | 1 |
| 20 | 18 | 16 | 14 | 12 | 10 | 8 | 6 | 4 | 2 |

| Pin No. | 19 | 17 | 15 | 13 | 11 | 9 | 7 | 5 | 3 | 1 |
|---|---|---|---|---|---|---|---|---|---|---|
| Valve No. | + | − | 8A | 7A | 6A | 5A | 4A | 3A | 2A | 1A |
| Pin No. | 20 | 18 | 16 | 14 | 12 | 10 | 8 | 6 | 4 | 2 |
| Valve No. | + | − | 8B | 7B | 6B | 5B | 4B | 3B | 2B | 1B |

### Flat cable connector (20-pin)

● In the case of wiring specification **-F201** (Maximum number of control pins: 16)

**Example 1**

**F10M16APJ-F201-S stn.1 ～ 15 F10T1-A1-PP DC24V**
**stn.16 F10BPC**

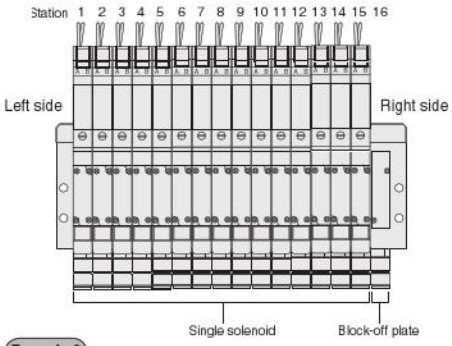


Number of units : 16 units
Wiring specification : **-F201**
Wiring connection specification : **-S** (single wiring)

(Top View) Triangle mark ▽

| | | | | | | | | | |
|---|---|---|---|---|---|---|---|---|---|
| 11 | 12 | 13 | 14 | 15 | 16 | 17 | 18 | 19 | 20 |
| 1 | 2 | 3 | 4 | 5 | 6 | 7 | 8 | 9 | 10 |

| Pin No. | 11 | 12 | 13 | 14 | 15 | 16 | 17 | 18 | 19 | 20 |
|---|---|---|---|---|---|---|---|---|---|---|
| Valve No. | 9A | 10A | 11A | 12A | 13A | 14A | 15A | 16A | − | + |
| Pin No. | 1 | 2 | 3 | 4 | 5 | 6 | 7 | 8 | 9 | 10 |
| Valve No. | 1A | 2A | 3A | 4A | 5A | 6A | 7A | 8A | − | + |

**Example 2**

**F10M8APJ-F201-W stn.1～4 F10T1-A1-PP DC24V**
**stn.5～7 F10T2-A1-PP DC24V**
**stn.8 F10BPC**

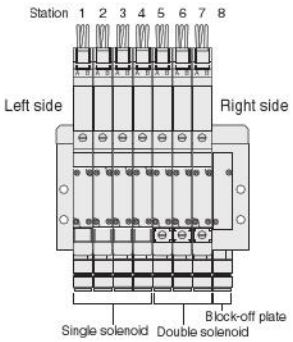


Number of units : 8 units
Wiring specification : **-F201**
Wiring connection specification : **-W** (double wiring)

(Top View) Triangle mark ▽

| | | | | | | | | | |
|---|---|---|---|---|---|---|---|---|---|
| 11 | 12 | 13 | 14 | 15 | 16 | 17 | 18 | 19 | 20 |
| 1 | 2 | 3 | 4 | 5 | 6 | 7 | 8 | 9 | 10 |

| Pin No. | 11 | 12 | 13 | 14 | 15 | 16 | 17 | 18 | 19 | 20 |
|---|---|---|---|---|---|---|---|---|---|---|
| Valve No. | 5A | 5B | 6A | 6B | 7A | 7B | 8A | 8B | − | + |
| Pin No. | 1 | 2 | 3 | 4 | 5 | 6 | 7 | 8 | 9 | 10 |
| Valve No. | 1A | 1B | 2A | 2B | 3A | 3B | 4A | 4B | − | + |

**Caution:** Connector pin numbers are assigned for the sake of convenience.
Use the ▽ mark as the reference.

Notes: 1. The valve No.1A, 1B, 2A, 2B··· numerals show the stn. numbers in order, while the letters A and B show the A and B sides of the solenoid.
2. The stn. numbers are counted from the left, 1, 2···, with the solenoid on top and the valve in front.

## Pin (Terminal) Locations by Wiring Specification (Top View) (For Monoblock Manifold A Type and F Type Wire-Saving Type, Split Manifold Plug-in Type)

### Flat cable connector (10-pin)

**●-F100□□** (Maximum number of control pins: 8)

Triangle mark ▽

| | | | | |
|---|---|---|---|---|
| 9 | 7 | 5 | 3 | 1 |
| 10 | 8 | 6 | 4 | 2 |

1～8 : Control pins
9, 10 : Common pins (short-circuited within the wiring block)

**●-F101□□** (Maximum number of control pins: 8)

Triangle mark ▽

| | | | | |
|---|---|---|---|---|
| 9 | 7 | 5 | 3 | 1 |
| 10 | 8 | 6 | 4 | 2 |

1～8 : Control pins
9 : (−) pin Note
10 : (+) pin

Note: For no-power terminal type, set to NC (unused pin).

### Flat cable connector (20-pin)

**●-F200□□** (Maximum number of control pins: 16)

Triangle mark ▽

| | | | | | | | | | |
|---|---|---|---|---|---|---|---|---|---|
| 19 | 17 | 15 | 13 | 11 | 9 | 7 | 5 | 3 | 1 |
| 20 | 18 | 16 | 14 | 12 | 10 | 8 | 6 | 4 | 2 |

1～16 : Control pins
17, 18 : (−) pins (short-circuited within the wiring block) Note
19, 20 : (+) pins (short-circuited within the wiring block)
Note: For no-power terminal type, set to NC (unused pin).

**●-F201□□** (Maximum number of control pins: 16)

Triangle mark ▽

| | | | | | | | | | |
|---|---|---|---|---|---|---|---|---|---|
| 11 | 12 | 13 | 14 | 15 | 16 | 17 | 18 | 19 | 20 |
| 1 | 2 | 3 | 4 | 5 | 6 | 7 | 8 | 9 | 10 |

1～8 : Control pins
11～18 : Control pins
9, 19 : (−) pins (short-circuited within the wiring block) Note
10, 20 : (+) pins (short-circuited within the wiring block)

Note: For no-power terminal type, set to NC (unused pin).

**Caution**: Connector pin numbers are assigned for the sake of convenience.
Use the ▽ mark as the reference.

Remark : The **-F201** corresponds to Koganei's pin locations for the PC wiring system (wire-saving unit). For details, see the Valves General Catalog.

### D-sub connector (25-pin)

**●-D250□□** (Maximum number of control pins: 16)

| | | | | | | | | | | | | |
|---|---|---|---|---|---|---|---|---|---|---|---|---|
| 1 | 3 | 5 | 7 | 9 | 11 | 13 | 15 | 17 | 19 | 21 | 23 | 25 |
| 2 | 4 | 6 | 8 | 10 | 12 | 14 | 16 | 18 | 20 | 22 | 24 | |

1～16 : Control pins
20, 21, 22 : (−) pins (short-circuited within the wiring block) Note
23, 24, 25 : (+) pins (short-circuited within the wiring block)
Note: For no-power terminal type, set to NC (unused pin).

**Caution:** The above pin numbers are assigned based on the solenoid valve wiring sequence for the sake of convenience.
They differ from the pin locations and pin numbers (marking) prescribed (JIS-X5101) for the Data Circuit-terminating Equipment (DCE).

**●-D251□□** Pin locations based on JIS (Maximum number of control pins: 20)

| | | | | | | | | | | | | |
|---|---|---|---|---|---|---|---|---|---|---|---|---|
| 1 | 2 | 3 | 4 | 5 | 6 | 7 | 8 | 9 | 10 | 11 | 12 | 13 |
| 14 | 15 | 16 | 17 | 18 | 19 | 20 | 21 | 22 | 23 | 24 | 25 | |

1～10, 14～23 : Control pins
12, 13 : (−) pins (short-circuited within the wiring block) Note
24, 25 : (+) pins (short-circuited within the wiring block)
Note: For no-power terminal type, set to NC (unused pin).

### Flat cable connector (26-pin)

**●-F260□□** (Maximum number of control pins: 20)

Triangle mark ▽

| | | | | | | | | | | | | |
|---|---|---|---|---|---|---|---|---|---|---|---|---|
| 25 | 23 | 21 | 19 | 17 | 15 | 13 | 11 | 9 | 7 | 5 | 3 | 1 |
| 26 | 24 | 22 | 20 | 18 | 16 | 14 | 12 | 10 | 8 | 6 | 4 | 2 |

1～20 : Control pins
23, 24 : (−) pins (short-circuited within the wiring block) Note
25, 26 : (+) pins (short-circuited within the wiring block)
Note: For no-power terminal type, set to NC (unused pin).

### D-sub connector (37-pin)

**●-D370NU** (Maximum number of control pins: 32)

| | | | | | | | | | | | | | | | | | | |
|---|---|---|---|---|---|---|---|---|---|---|---|---|---|---|---|---|---|---|
| 1 | 3 | 5 | 7 | 9 | 11 | 13 | 15 | 17 | 19 | 21 | 23 | 25 | 27 | 29 | 31 | 33 | 35 | 37 |
| 2 | 4 | 6 | 8 | 10 | 12 | 14 | 16 | 18 | 20 | 22 | 24 | 26 | 28 | 30 | 32 | 34 | 36 | |

1～32 : Control pin
36, 37 : Common pin (For positive common)

**Caution:** The above pin numbers are assigned based on the solenoid valve wiring sequence for the sake of convenience.
They differ from the pin locations and pin numbers (marking) prescribed (JIS-X5103) for the Data Circuit- terminating Equipment (DCE).

● Various dedicated cable assemblies are available.
See p. 103, 104 for details.

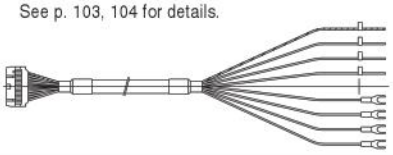

### Terminal block type (19 terminals, M3 screws)

**●-T200** (Maximum number of control pins: 18)

| | | | | | | | | | |
|---|---|---|---|---|---|---|---|---|---|
| 1 | 3 | 5 | 7 | 9 | 11 | 13 | 15 | 17 | COM |
| 2 | 4 | 6 | 8 | 10 | 12 | 14 | 16 | 18 | |

1～18 : Control terminals
COM : Common terminal

**Caution:** Apply the tightening torque for the terminal screw (M3) to 49.0 N·cm [4.3 in·lbf] or less.

※ For the relationship between the pin No.(terminal No.) and the corresponding solenoid, see p. 97- 102.

## Flat cable connector and D-sub connector (12VDC and 24VDC)

### ● Positive common

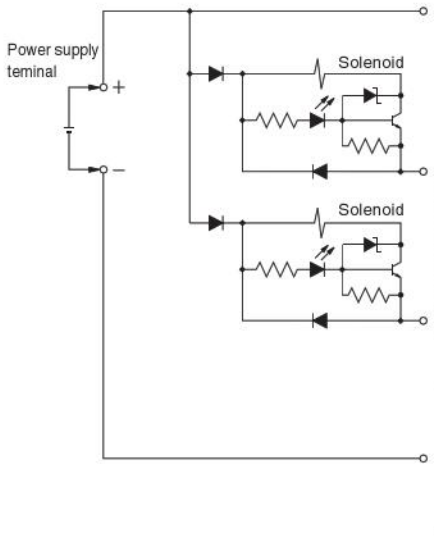


Pin No.

**-F100, -F100E**: 9, 10
**-F101, -F101E**: 10
**-F200, -F200E**: 19, 20
**-F201, -F201E**: 10, 20
**-F260, -F260E**: 25, 26
**-D250, -D250E, -D250U, -D250EU**: 23, 24, 25
**-D251, -D251E, -D251U, -D251EU**: 24, 25

**-F100, -F100E**: 1 to 8
**-F101, -F101E**: 1 to 8
**-F200, -F200E**: 1 to 16
**-F201, -F201E**: 1 to 8, 11 to 18
**-F260, -F260E**: 1 to 20
**-D250, -D250E, -D250U, -D250EU**: 1 to 16
**-D251, -D251E, -D251U, -D251EU**: 1 to 10, 14 to 23

**-F100, -F100E**: None
**-F101, -F101E**: 9
**-F200, -F200E**: 17, 18
**-F201, -F201E**: 9, 19
**-F260, -F260E**: 23, 24
**-D250, -D250E, -D250U, -D250EU**: 20, 21, 22
**-D251, -D251E, -D251U, -D251EU**: 12, 13

〈No-power terminal type〉

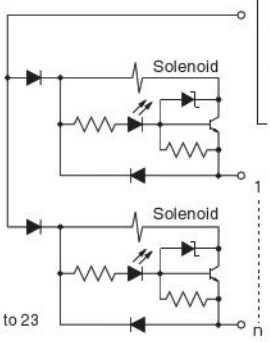


Pin No.

**-F100N, -F100EN**: 9, 10
**-F101N, -F101EN**: 10
**-F200N, -F200EN**: 19, 20
**-F201N, -F201EN**: 10, 20
**-F260N, -F260EN**: 25, 26
**-D250N, -D250EN**: 23, 24, 25
**-D251N, -D251EN**: 24, 25
**-D370NU** : 36, 37

**-F100N, -F100EN**: 1 to 8
**-F101N, -F101EN**: 1 to 8
**-F200N, -F200EN**: 1 to 16
**-F201N, -F201EN**: 1 to 8, 11 to 18
**-F260N, -F260EN**: 1 to 20
**-D250N, -D250EN**: 1 to 16
**-D251N, -D251EN**: 1 to 10, 14 to 23
**-D370NU** : 1 to 32

### ● Negative common (-129W)

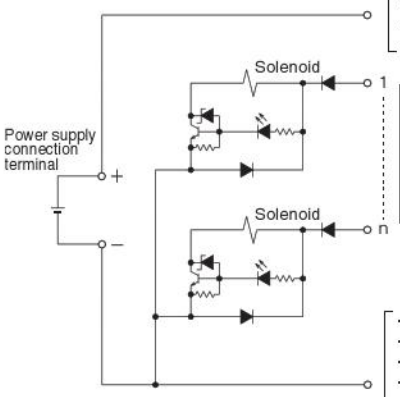


Pin No.

**-F100, -F100E**: 9, 10
**-F101, -F101E**: 10
**-F200, -F200E**: 19, 20
**-F201, -F201E**: 10, 20
**-F260, -F260E**: 25, 26
**-D250, -D250E, -D250U, -D250EU**: 23, 24, 25
**-D251, -D251E, -D251U, -D251EU**: 24, 25

**-F100, -F100E**: 1 to 8
**-F101, -F101E**: 1 to 8
**-F200, -F200E**: 1 to 16
**-F201, -F201E**: 1 to 8, 11 to 18
**-F260, -F260E**: 1 to 20
**-D250, -D250E, -D250U, -D250EU**: 1 to 16
**-D251, -D251E, -D251U, -D251EU**: 1 to 10, 14 to 23

**-F100, -F100E**: None
**-F101, -F101E**: 9
**-F200, -F200E**: 17, 18
**-F201, -F201E**: 9, 19
**-F260, -F260E**: 23, 24
**-D250, -D250E, -D250U, -D250EU**: 20, 21, 22
**-D251, -D251E, -D251U, -D251EU**: 12, 13

〈No-power terminal type〉

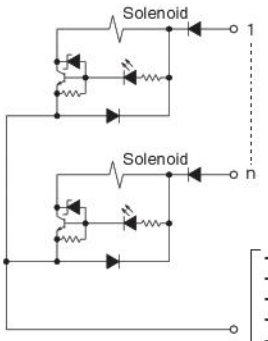


**-F100N, -F100EN**: 1 to 8
**-F101N, -F101EN**: 1 to 8
**-F200N, -F200EN**: 1 to 16
**-F201N, -F201EN**: 1 to 8, 11 to 18
**-F260N, -F260EN**: 1 to 20
**-D250N, -D250EN**: 1 to 16
**-D251N, -D251EN**: 1 to 10, 14 to 23
**-D370NU** : 1 to 32

Pin No.

**-F100N, -F100EN**: 9, 10
**-F101N, -F101EN**: 10
**-F200N, -F200EN**: 19, 20
**-F201N, -F201EN**: 10, 20
**-F260N, -F260EN**: 25, 26
**-D250N, -D250EN**: 23, 24, 25
**-D251N, -D251EN**: 24, 25
**-D370NU** : 36, 37

## F10, F15 Series Detailed Diagram of Wiring System

### D-sub connector (For 100VAC and 120VAC specification)

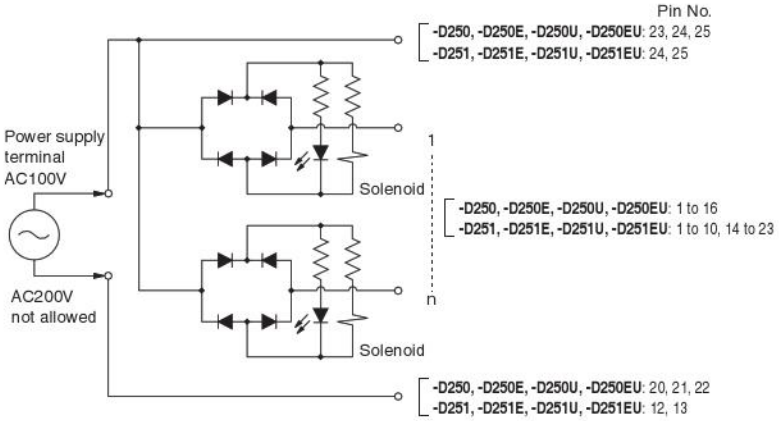


〈No-power terminal type〉

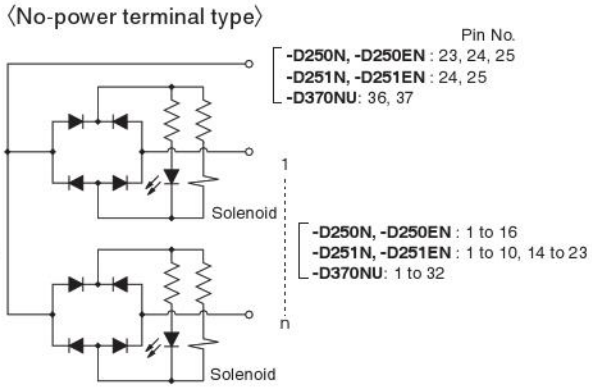


### Terminal block (For 12VDC and 24VDC specifications)

● **Positive common**

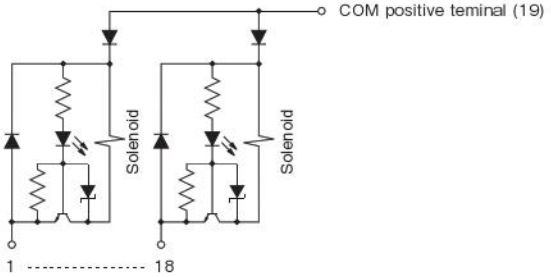


● **Negative common (-129W)**

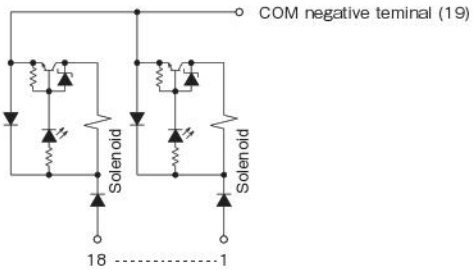


### Terminal block (For 100VAC and 120VAC specification)

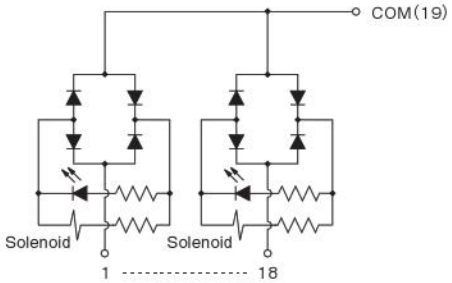


Remark: The internal circuit is of the standard type. For details of the low-current type, see p.20, 21.

# F18 Series Detailed Diagram of Wiring System

## Flat cable connector and D-sub connector (12VDC and 24VDC)

### ● Positive common

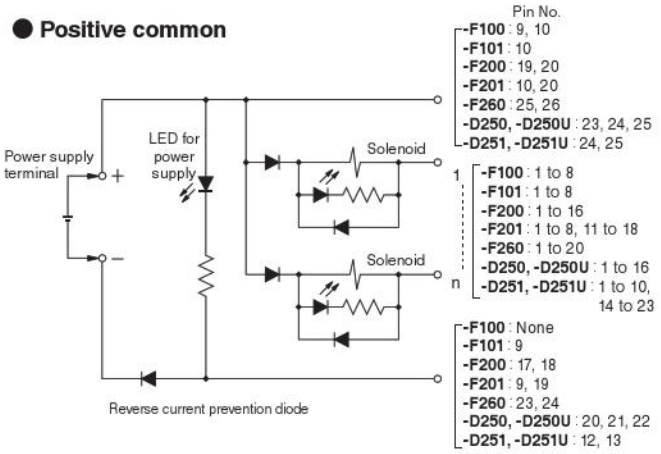


### ● Negative common (-129W)

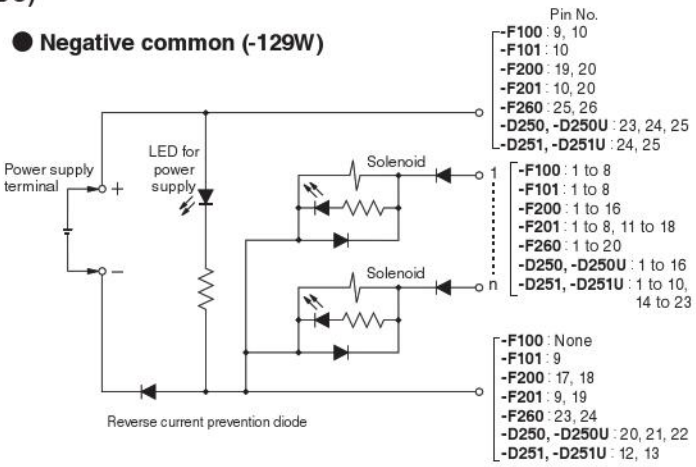


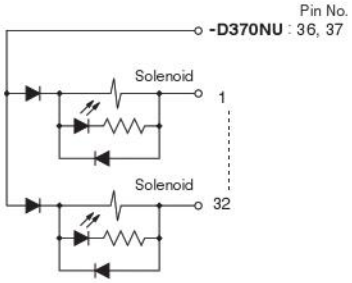


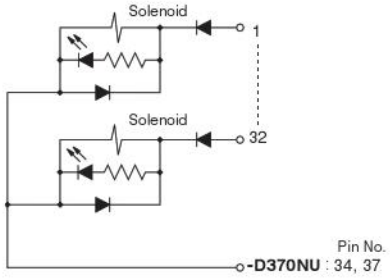


## D-sub connector (For 100VAC and 120VAC specification)

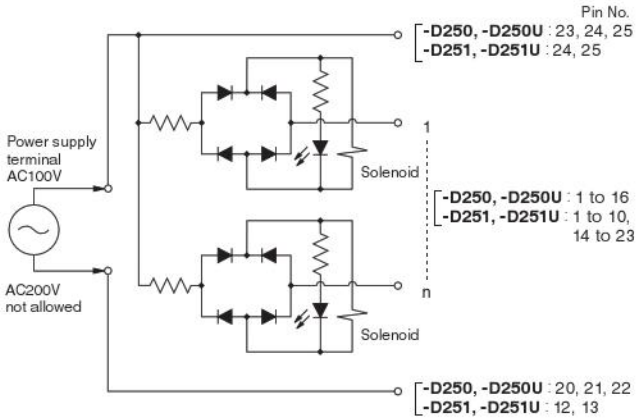


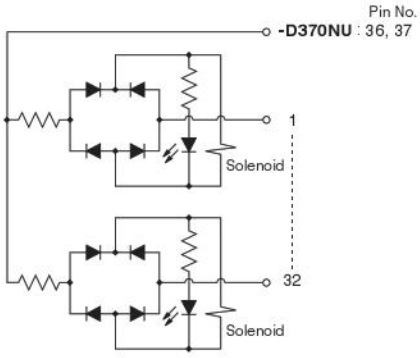

## F18 Series Detailed Diagram of Wiring System

### Terminal block (For 12VDC and 24VDC specifications)

● **Positive common**

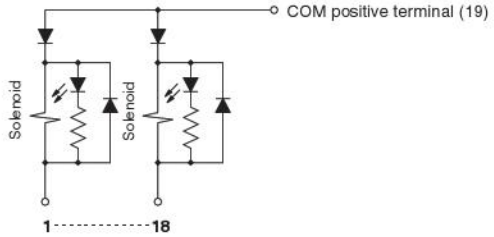


● **Negative common (-129W)**

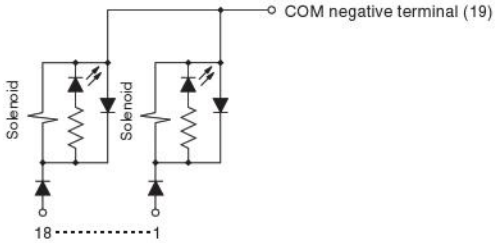


### Terminal block (For 100VAC and 120VAC specification)

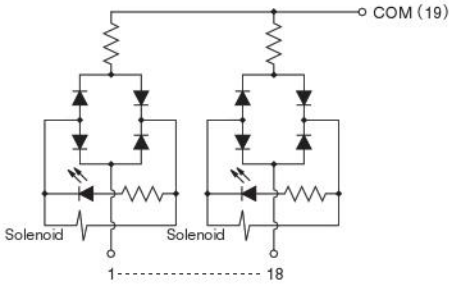

## Pin No. (Terminal No.) and Corresponding Solenoid (For Monoblock Manifold A Type and F Type Wire-Saving Type, Split Manifold Plug-in Type)

The examples below show the relationship between the split manifold pin No. (terminal No.) and the corresponding solenoid. This is the same for monoblock manifold A type wire-saving type, and monoblock manifold F type wire-saving type.
All the mounting examples show cases of the maximum number of control pins used.

### Flat cable connector (10-pin)

● In the case of wiring specification **-F100**□□ (Maximum number of control pins: 8)

**Example 1** **F10M5PJ-JR-F100 DC24V** **stn.1～2 F10T1-A1 DC24V**
**stn.3～4 F10T2-A1 DC24V**
**stn.5 F10BPP**

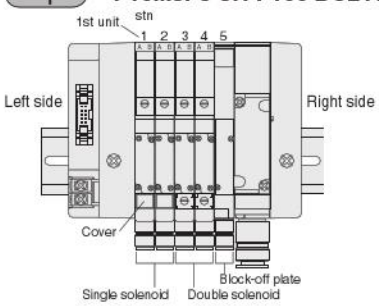


Number of units : 5 units
Wiring specification : **-F100**
Wiring connection specification : **Blank** (packed wiring)

(Top View) Triangle mark ▽

| | | | | |
|---|---|---|---|---|
| 9 | 7 | 5 | 3 | 1 |
| 10 | 8 | 6 | 4 | 2 |

| Pin No. | 9 | 7 | 5 | 3 | 1 |
|---|---|---|---|---|---|
| Valve No. | + | 5A | 4A | 3A | 1A |
| Pin No. | 10 | 8 | 6 | 4 | 2 |
| Valve No. | + | 5B | 4B | 3B | 2A |

**Example 2** **F10M4PJ-JR-F100-W DC24V** **stn.1～2 F10T1-A1 DC24V**
**stn.3～4 F10T2-A1 DC24V**

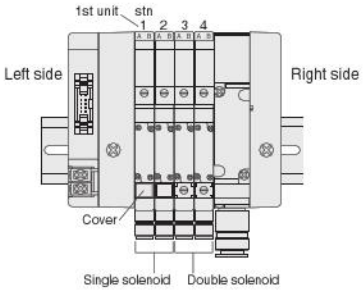


Number of units : 4 units
Wiring specification : **-F100**
Wiring connection specification : **-W** (double wiring)

(Top View) Triangle mark ▽

| | | | | |
|---|---|---|---|---|
| 9 | 7 | 5 | 3 | 1 |
| 10 | 8 | 6 | 4 | 2 |

| Pin No. | 9 | 7 | 5 | 3 | 1 |
|---|---|---|---|---|---|
| Valve No. | + | 4A | 3A | 2A | 1A |
| Pin No. | 10 | 8 | 6 | 4 | 2 |
| Valve No. | + | 4B | 3B | 2B | 1B |

### Flat cable connector (10-pin)

● In the case of wiring specification **-F101**□□ (Maximum number of control pins: 8)

**Example 1** **F10M5PJ-JR-F101 DC24V** **stn.1～2 F10T1-A1 DC24V**
**stn.3～4 F10T2-A1 DC24V**
**stn.5 F10BPP**

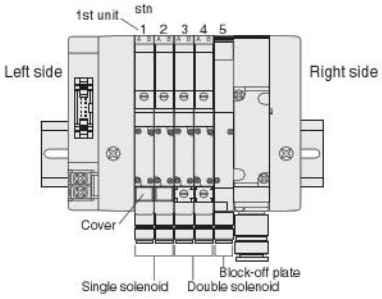


Number of units : 5 units
Wiring specification : **-F101**
Wiring connection specification : **Blank** (packed wiring)

(Top View) Triangle mark ▽

| | | | | |
|---|---|---|---|---|
| 9 | 7 | 5 | 3 | 1 |
| 10 | 8 | 6 | 4 | 2 |

| Pin No. | 9 | 7 | 5 | 3 | 1 |
|---|---|---|---|---|---|
| Valve No. | – | 5A | 4A | 3A | 1A |
| Pin No. | 10 | 8 | 6 | 4 | 2 |
| Valve No. | + | 5B | 4B | 3B | 2A |

Note: For the no-power terminal type, set pin No.9 to NC (unused pin).

**Example 2** **F10M4PJ-JR-F101-W DC24V** **stn.1～2 F10T1-A1 DC24V**
**stn.3～4 F10T2-A1 DC24V**

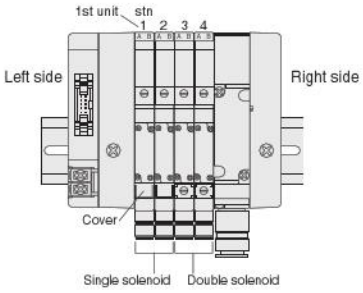


Number of units : 4 units
Wiring specification : **-F101**
Wiring connection specification : **-W** (double wiring)

(Top View) Triangle mark ▽

| | | | | |
|---|---|---|---|---|
| 9 | 7 | 5 | 3 | 1 |
| 10 | 8 | 6 | 4 | 2 |

| Pin No. | 9 | 7 | 5 | 3 | 1 |
|---|---|---|---|---|---|
| Valve No. | – | 4A | 3A | 2A | 1A |
| Pin No. | 10 | 8 | 6 | 4 | 2 |
| Valve No. | + | 4B | 3B | 2B | 1B |

Note: For the no-power terminal type, set pin No.9 to NC (unused pin).

Notes:
1. The valve No.1A, 1B, 2A, 2B··· numerals show the stn. numbers in order, while the letters A and B show the A and B sides of the solenoid.
2. The stn. numbers are counted from the left, 1, 2···, with the solenoid on top and the valve in front.
3. When selecting wiring connection specification **-W**, all wiring becomes double wiring, regardless of valve specifications.
4. Caution should be exercised that the block-off plate is always double wiring (allocated 2 control pins to 1 unit), regardless of the wiring connection specifications.
5. Connector pin numbers are assigned for the sake of convenience. Use the ▽ mark as the reference.

## Pin No. (Terminal No.) and Corresponding Solenoid (For Monoblock Manifold A Type and F Type Wire-Saving Type, Split Manifold Plug-in Type)

The examples below show the relationship between the split manifold pin No. (terminal No.) and the corresponding solenoid. This is the same for monoblock manifold A type wire-saving type, and monoblock manifold F type wire-saving type.
All the mounting examples show cases of the maximum number of control pins used.

### Flat cable connector (20-pin)

● In the case of wiring specification **-F200**□□ (Maximum number of control pins: 16)

**Example 1** **F10M10PJ-JR-F200 DC24V stn.1～4 F10T1-A1 DC24V**
**stn.5～9 F10T2-A1 DC24V**
**stn.10 F10BPP**

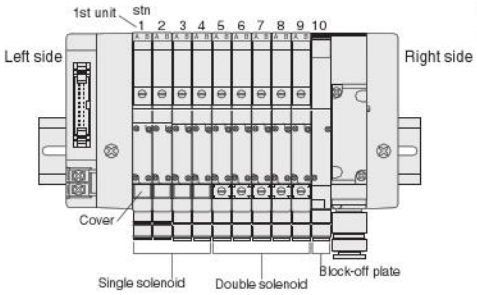


Number of units : 10 units
Wiring specification : **-F200**
Wiring connection specification : **Blank** (packed wiring)

(Top View) Triangle mark ▽

| | | | | | | | | | |
|---|---|---|---|---|---|---|---|---|---|
| 19 | 17 | 15 | 13 | 11 | 9 | 7 | 5 | 3 | 1 |
| 20 | 18 | 16 | 14 | 12 | 10 | 8 | 6 | 4 | 2 |

| Pin No. | 19 | 17 | 15 | 13 | 11 | 9 | 7 | 5 | 3 | 1 |
|---|---|---|---|---|---|---|---|---|---|---|
| Valve No. | + | − | 10A | 9A | 8A | 7A | 6A | 5A | 3A | 1A |
| Pin No. | 20 | 18 | 16 | 14 | 12 | 10 | 8 | 6 | 4 | 2 |
| Valve No. | + | − | 10B | 9B | 8B | 7B | 6B | 5B | 4A | 2A |

Note: For the no-power terminal type, set pins No.17 and 18 to NC (unused pins).

**Example 2** **F10M8PJ-JR-F200-W DC24V stn.1～4 F10T1-A1 DC24V**
**stn.5～7 F10T2-A1 DC24V**
**stn.8 F10BPP**

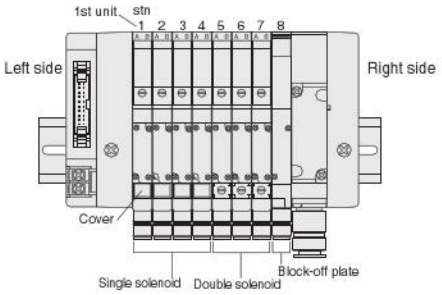


Number of units : 8 units
Wiring specification : **-F200**
Wiring connection specification : **-W** (double wiring)

(Top View) Triangle mark ▽

| | | | | | | | | | |
|---|---|---|---|---|---|---|---|---|---|
| 19 | 17 | 15 | 13 | 11 | 9 | 7 | 5 | 3 | 1 |
| 20 | 18 | 16 | 14 | 12 | 10 | 8 | 6 | 4 | 2 |

| Pin No. | 19 | 17 | 15 | 13 | 11 | 9 | 7 | 5 | 3 | 1 |
|---|---|---|---|---|---|---|---|---|---|---|
| Valve No. | + | − | 8A | 7A | 6A | 5A | 4A | 3A | 2A | 1A |
| Pin No. | 20 | 18 | 16 | 14 | 12 | 10 | 8 | 6 | 4 | 2 |
| Valve No. | + | − | 8B | 7B | 6B | 5B | 4B | 3B | 2B | 1B |

Note: For the no-power terminal type, set pins No.17 and 18 to NC (unused pins).

### Flat cable connector (20-pin)

● In the case of wiring specification **-F201**□□ (Maximum number of control pins: 16)

**Example 1** **F10M10PJ-JR-F201 DC24V stn.1～4 F10T1-A1 DC24V**
**stn.5～9 F10T2-A1 DC24V**
**stn.10 F10BPP**

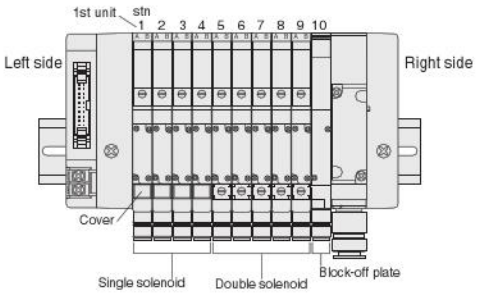


Number of units : 10 units
Wiring specification : **-F201**
Wiring connection specification : **Blank** (packed wiring)

(Top View) Triangle mark ▽

| | | | | | | | | | |
|---|---|---|---|---|---|---|---|---|---|
| 11 | 12 | 13 | 14 | 15 | 16 | 17 | 18 | 19 | 20 |
| 1 | 2 | 3 | 4 | 5 | 6 | 7 | 8 | 9 | 10 |

| Pin No. | 11 | 12 | 13 | 14 | 15 | 16 | 17 | 18 | 19 | 20 |
|---|---|---|---|---|---|---|---|---|---|---|
| Valve No. | 7A | 7B | 8A | 8B | 9A | 9B | 10A | 10B | − | + |
| Pin No. | 1 | 2 | 3 | 4 | 5 | 6 | 7 | 8 | 9 | 10 |
| Valve No. | 1A | 2A | 3A | 4A | 5A | 5B | 6A | 6B | − | + |

Note: For the no-power terminal type, set pins No.9 and 19 to NC (unused pins).

**Example 2** **F10M8PJ-JR-F201-W DC24V stn.1～4 F10T1-A1 DC24V**
**stn.5～7 F10T2-A1 DC24V**
**stn.8 F10BPP**

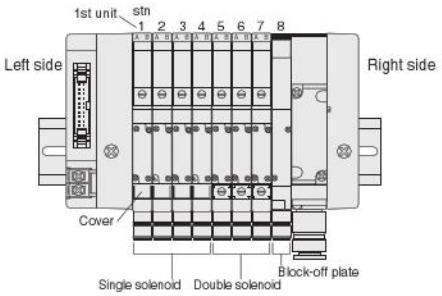


Number of units : 8 units
Wiring specification : **-F201**
Wiring connection specification : **-W** (double wiring)

(Top View) Triangle mark ▽

| | | | | | | | | | |
|---|---|---|---|---|---|---|---|---|---|
| 11 | 12 | 13 | 14 | 15 | 16 | 17 | 18 | 19 | 20 |
| 1 | 2 | 3 | 4 | 5 | 6 | 7 | 8 | 9 | 10 |

| Pin No. | 11 | 12 | 13 | 14 | 15 | 16 | 17 | 18 | 19 | 20 |
|---|---|---|---|---|---|---|---|---|---|---|
| Valve No. | 5A | 5B | 6A | 6B | 7A | 7B | 8A | 8B | − | + |
| Pin No. | 1 | 2 | 3 | 4 | 5 | 6 | 7 | 8 | 9 | 10 |
| Valve No. | 1A | 1B | 2A | 2B | 3A | 3B | 4A | 4B | − | + |

Note: For the no-power terminal type, set pins No.9 and 19 to NC (unused pins).

**Caution:** Connector pin numbers are assigned for the sake of convenience.
Use the ▽ mark as the reference.

Notes:
1. The valve No.1A, 1B, 2A, 2B··· numerals show the stn. numbers in order, while the letters A and B show the A and B sides of the solenoid.
2. The stn. numbers are counted from the left, 1, 2···, with the solenoid on top and the valve in front.
3. When selecting wiring connection specification **-W**, all wiring becomes double wiring, regardless of valve specifications.
4. Caution should be exercised that the block-off plate is always double wiring (allocated 2 control pins to 1 unit), regardless of the wiring connection specifications.
5. Connector pin numbers are assigned for the sake of convenience. Use the ▽ mark as the reference.

The examples below show the relationship between the split manifold pin No. (terminal No.) and the corresponding solenoid. This is the same for monoblock manifold A type wire-saving type, and monoblock manifold F type wire-saving type.
All the mounting examples show cases of the maximum number of control pins used.

## Flat cable connector (26-pin)

● In the case of wiring specification **-F260**□□ (Maximum number of control pins: 20)

**Example 1** **F10M12PJ-JR-F260 DC24V stn.1～4 F10T1-A1 DC24V**
**stn.5～11 F10T2-A1 DC24V**
**stn.12 F10BPP**

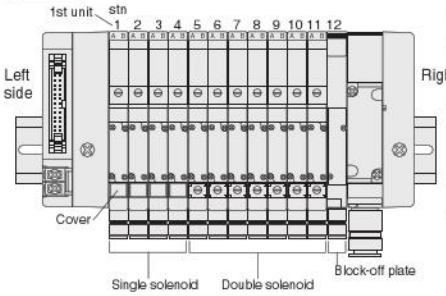


Number of units : 12 units
Wiring specification : **-F260**
Wiring connection specification : **Blank** (packed wiring)

(Top View)

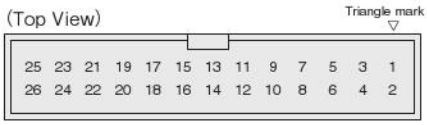


| Pin No. | 25 | 23 | 21 | 19 | 17 | 15 | 13 | 11 | 9 | 7 | 5 | 3 | 1 |
|---|---|---|---|---|---|---|---|---|---|---|---|---|---|
| Valve No. | + | − | | 12A | 11A | 10A | 9A | 8A | 7A | 6A | 5A | 3A | 1A |
| Pin No. | 26 | 24 | 22 | 20 | 18 | 16 | 14 | 12 | 10 | 8 | 6 | 4 | 2 |
| Valve No. | + | − | | 12B | 11B | 10B | 9B | 8B | 7B | 6B | 5B | 4A | 2A |

Note: For the no-power terminal type, set pins No.23 and 24 to NC (unused pins).

**Example 2** **F10M10PJ-JR-F260-W DC24V stn.1～6 F10T1-A1 DC24V**
**stn.7～9 F10T2-A1 DC24V**
**stn.10 F10BPP**

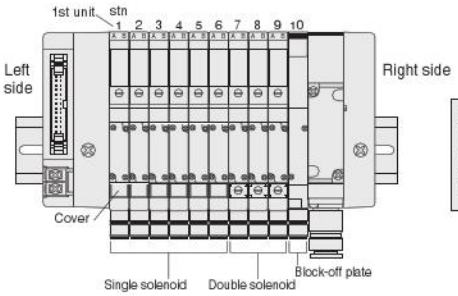


Number of units : 10 units
Wiring specification : **-F260**
Wiring connection specification : **-W** (double wiring)

(Top View)

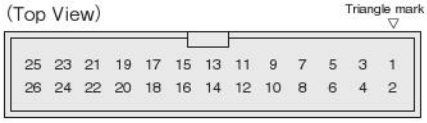


| Pin No. | 25 | 23 | 21 | 19 | 17 | 15 | 13 | 11 | 9 | 7 | 5 | 3 | 1 |
|---|---|---|---|---|---|---|---|---|---|---|---|---|---|
| Valve No. | + | − | | 10A | 9A | 8A | 7A | 6A | 5A | 4A | 3A | 2A | 1A |
| Pin No. | 26 | 24 | 22 | 20 | 18 | 16 | 14 | 12 | 10 | 8 | 6 | 4 | 2 |
| Valve No. | + | − | | 10B | 9B | 8B | 7B | 6B | 5B | 4B | 3B | 2B | 1B |

Note: For the no-power terminal type, set pins No.23 and 24 to NC (unused pins).

Notes:
1. The valve No.1A, 1B, 2A, 2B··· numerals show the stn. numbers in order, while the letters A and B show the A and B sides of the solenoid.
2. The stn. numbers are counted from the left, 1, 2···, with the solenoid on top and the valve in front.
3. When selecting wiring connection specification **-W**, all wiring becomes double wiring, regardless of valve specifications.
4. Caution should be exercised that the block-off plate is always double wiring (allocated 2 control pins to 1 unit), regardless of the wiring connection specifications.
5. Connector pin numbers are assigned for the sake of convenience. Use the ▽ mark as the reference.

## Pin No. (Terminal No.) and Corresponding Solenoid (For Monoblock Manifold A Type and F Type Wire-Saving Type, Split Manifold Plug-in Type)

The examples below show the relationship between the split manifold pin No. (terminal No.) and the corresponding solenoid. This is the same for monoblock manifold A type wire-saving type, and monoblock manifold F type wire-saving type.
All the mounting examples show cases of the maximum number of control pins used.

### D-sub connector (25-pin)

● In the case of wiring specification **-D250□□**
(Maximum number of control pins: 16)

**Caution:** The connector pin numbers are assigned based on the solenoid valve wiring sequence for the sake of convenience. They differ from the pin locations and pin numbers (marking) prescribed (JIS-X5101) for the Data Circuit-terminating Equipment (DCE).

**Example 1** **F10M10PJ-JR-D250 DC24V stn.1～4 F10T1-A1 DC24V stn.5～9 F10T2-A1 DC24V stn.10 F10BPP**

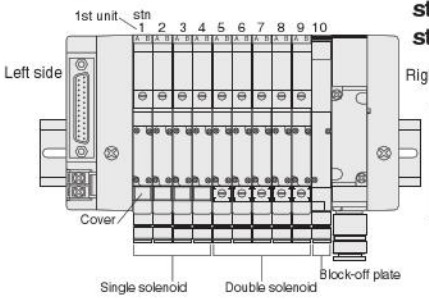


Number of units : 10 units
Wiring specification : **-D250**
Wiring connection specification : **Blank** (packed wiring)

(Top View)

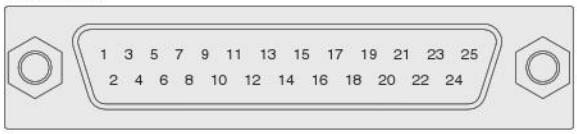


| Pin No. | 1 | 3 | 5 | 7 | 9 | 11 | 13 | 15 | 17 | 19 | 21 | 23 | 25 |
|---|---|---|---|---|---|---|---|---|---|---|---|---|---|
| Valve No. | 1A | 3A | 5A | 6A | 7A | 8A | 9A | 10A | | | – | + | + |

| Pin No. | 2 | 4 | 6 | 8 | 10 | 12 | 14 | 16 | 18 | 20 | 22 | 24 |
|---|---|---|---|---|---|---|---|---|---|---|---|---|
| Valve No. | 2A | 4A | 5B | 6B | 7B | 8B | 9B | 10B | | – | – | + |

Note: For the no-power terminal type, set pins No.20, 21, and 22 to NC (unused pins).

**Example 2** **F10M8PJ-JR-D250-W DC24V stn.1～4 F10T1-A1 DC24V stn.5～7 F10T2-A1 DC24V stn.8 F10BPP**

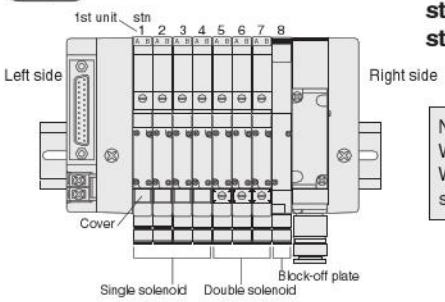


Number of units : 8 units
Wiring specification : **-D250**
Wiring connection specification : **-W** (double wiring)

(Top View)

| Pin No. | 1 | 3 | 5 | 7 | 9 | 11 | 13 | 15 | 17 | 19 | 21 | 23 | 25 |
|---|---|---|---|---|---|---|---|---|---|---|---|---|---|
| Valve No. | 1A | 2A | 3A | 4A | 5A | 6A | 7A | 8A | | | – | + | + |

| Pin No. | 2 | 4 | 6 | 8 | 10 | 12 | 14 | 16 | 18 | 20 | 22 | 24 |
|---|---|---|---|---|---|---|---|---|---|---|---|---|
| Valve No. | 1B | 2B | 3B | 4B | 5B | 6B | 7B | 8B | | – | – | + |

Note: For the no-power terminal type, set pins No.20, 21, and 22 to NC (unused pins).

### D-sub connector (25-pin)

● In the case of wiring specification **-D251□□**
Pin locations based on JIS (Maximum number of control pins: 20)

**Example 1** **F10M12PJ-JR-D251 DC24V stn.1～4 F10T1-A1 DC24V stn.5～11 F10T2-A1 DC24V stn.12 F10BPP**

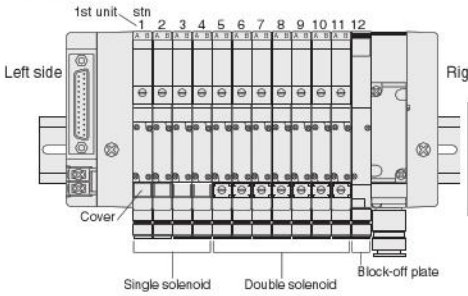


Number of units : 12 units
Wiring specification : **-D251**
Wiring connection specification : **Blank** (packed wiring)

(Top View)

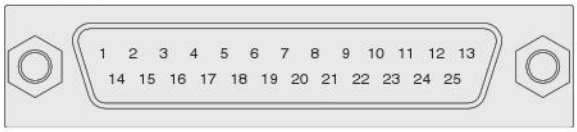


| Pin No. | 1 | 2 | 3 | 4 | 5 | 6 | 7 | 8 | 9 | 10 | 11 | 12 | 13 |
|---|---|---|---|---|---|---|---|---|---|---|---|---|---|
| Valve No. | 1A | 2A | 3A | 4A | 5A | 5B | 6A | 6B | 7A | 7B | | – | – |

| Pin No. | 14 | 15 | 16 | 17 | 18 | 19 | 20 | 21 | 22 | 23 | 24 | 25 |
|---|---|---|---|---|---|---|---|---|---|---|---|---|
| Valve No. | 8A | 8B | 9A | 9B | 10A | 10B | 11A | 11B | 12A | 12B | + | + |

Note: For the no-power terminal type, set pins No.12 and 13 to NC (unused pins).

**Example 2** **F10M10PJ-JR-D251-W DC24V stn.1～6 F10T1-A1 DC24V stn.7～9 F10T2-A1 DC24V stn.10 F10BPP**

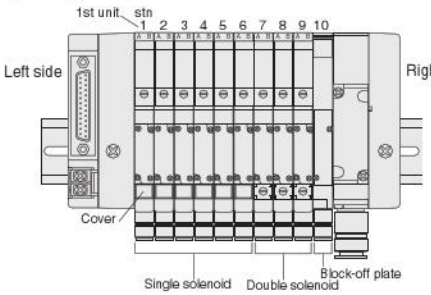


Number of units : 10 units
Wiring specification : **-D251**
Wiring connection specification : **-W** (double wiring)

(Top View)

| Pin No. | 1 | 2 | 3 | 4 | 5 | 6 | 7 | 8 | 9 | 10 | 11 | 12 | 13 |
|---|---|---|---|---|---|---|---|---|---|---|---|---|---|
| Valve No. | 1A | 1B | 2A | 2B | 3A | 3B | 4A | 4B | 5A | 5B | | – | – |

| Pin No. | 14 | 15 | 16 | 17 | 18 | 19 | 20 | 21 | 22 | 23 | 24 | 25 |
|---|---|---|---|---|---|---|---|---|---|---|---|---|
| Valve No. | 6A | 6B | 7A | 7B | 8A | 8B | 9A | 9B | 10A | 10B | + | + |

Note: For the no-power terminal type, set pins No.12 and 13 to NC (unused pins).

Notes:
1. The valve No.1A, 1B, 2A, 2B··· numerals show the stn. numbers in order, while the letters A and B show the A and B sides of the solenoid.
2. The stn. numbers are counted from the left, 1, 2···, with the solenoid on top and the valve in front.
3. When selecting wiring connection specification **-W**, all wiring becomes double wiring, regardless of valve specifications.
4. Caution should be exercised that the block-off plate is always double wiring (allocated 2 control pins to 1 unit), regardless of the wiring connection specifications.

## Pin No. (Terminal No.) and Corresponding Solenoid (For Split Manifold Plug-in Type)

The examples below show the relationship between the split manifold pin numbers and the corresponding solenoids.
All the mounting examples show cases of the maximum number of control pins used.

### D-sub connector (37-pin)

● In the case of wiring specification **-D370NU**
(Maximum number of control pins: 32)

**Caution:** For the sake of convenience, the connector pins are assigned based on the solenoid valve wiring sequence, which differs from the pin locations and pin numbers (marking) prescribed in JIS-X5103 for the Data Circuit-terminating Equipment (DCE).

**Example 1**

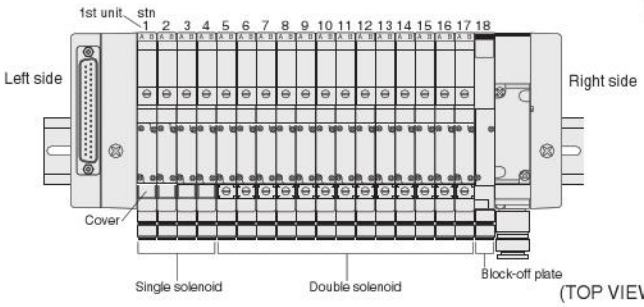


**F10M18PJ-JR-D370NU DC24V** **stn.1～4 F10T1-A1 DC24V**
**stn.5～17 F10T2-A1 DC24V**
**stn.18 F10BPP**

Number of units : 18 units
Wiring specification : **-D370NU**
Wiring connection specification :
**Blank** (packed wiring)

(TOP VIEW)

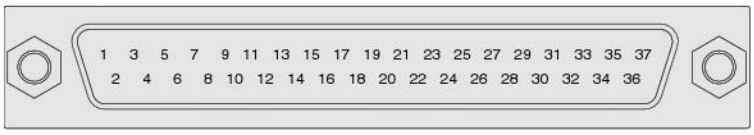


| Pin No. | 1 | 3 | 5 | 7 | 9 | 11 | 13 | 15 | 17 | 19 | 21 | 23 | 25 | 27 | 29 | 31 | 33 | 35 | 37 |
|---|---|---|---|---|---|---|---|---|---|---|---|---|---|---|---|---|---|---|---|
| Valve No. | 1A | 3A | 5A | 6A | 7A | 8A | 9A | 10A | 11A | 12A | 13A | 14A | 15A | 16A | 17A | 18A | | | + |

| Pin No. | 2 | 4 | 6 | 8 | 10 | 12 | 14 | 16 | 18 | 20 | 22 | 24 | 26 | 28 | 30 | 32 | 34 | 36 |
|---|---|---|---|---|---|---|---|---|---|---|---|---|---|---|---|---|---|---|
| Valve No. | 2A | 4A | 5B | 6B | 7B | 8B | 9B | 10B | 11B | 12B | 13B | 14B | 15B | 16B | 17B | 18B | | + |

**Example 2**

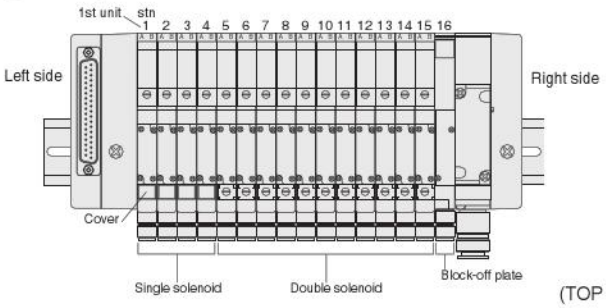


**F10M16PJ-JR-D370NU-W DC24V** **stn.1～4 F10T1-A1 DC24V**
**stn.5～15 F10T2-A1 DC24V**
**stn.16 F10BPP**

Number of units : 16 units
Wiring specification : **-D370NU**
Wiring connection specification :
**-W** (double wiring)

(TOP VIEW)

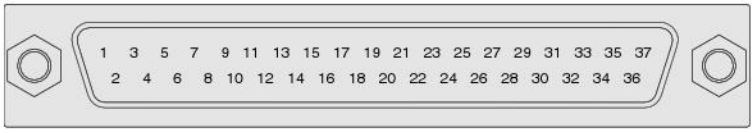


| Pin No. | 1 | 3 | 5 | 7 | 9 | 11 | 13 | 15 | 17 | 19 | 21 | 23 | 25 | 27 | 29 | 31 | 33 | 35 | 37 |
|---|---|---|---|---|---|---|---|---|---|---|---|---|---|---|---|---|---|---|---|
| Valve No. | 1A | 2A | 3A | 4A | 5A | 6A | 7A | 8A | 9A | 10A | 11A | 12A | 13A | 14A | 15A | 16A | | | + |

| Pin No. | 2 | 4 | 6 | 8 | 10 | 12 | 14 | 16 | 18 | 20 | 22 | 24 | 26 | 28 | 30 | 32 | 34 | 36 |
|---|---|---|---|---|---|---|---|---|---|---|---|---|---|---|---|---|---|---|
| Valve No. | 1B | 2B | 3B | 4B | 5B | 6B | 7B | 8B | 9B | 10B | 11B | 12B | 13B | 14B | 15B | 16B | | + |

Notes:
1. The valve No.1A, 1B, 2A, 2B··· numerals show the stn. numbers in order, while the letters A and B show the A and B sides of the solenoid.
2. The stn. numbers are counted from the left, 1, 2···, with the solenoid on top and the valve in front.
3. When selecting wiring connection specification **-W**, all wiring becomes double wiring, regardless of valve specifications.
4. Caution should be exercised that the block-off plate is always double wiring (allocated 2 control pins to 1 unit), regardless of the wiring connection specifications.

## Pin No. (Terminal No.) and Corresponding Solenoid (For Split Manifold Plug-in Type)

The examples below show the relationship between the split manifold terminal No. and the corresponding solenoid.
All the mounting examples show cases of the maximum number of control pins used.

### Terminal block type (19 terminals, M3 screws)

● In the case of wiring specification **-T200** (Maximum number of control pins: 18)

**Example 1**

**F10M12PJ-JR-T200 DC24V stn.1～6 F10T1-A1 DC24V**
**stn.7～11 F10T2-A1 DC24V**
**stn.12 F10BPP**

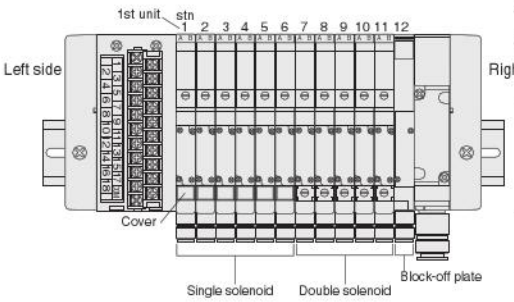


Number of units : 12 units
Wiring specification : **-T200**
Wiring connection specification : **Blank** (packed wiring)

(Top View)

| | | | | | | | | | | |
|---|---|---|---|---|---|---|---|---|---|---|
| 1 | 3 | 5 | 7 | 9 | 11 | 13 | 15 | 17 | COM | |
| | 2 | 4 | 6 | 8 | 10 | 12 | 14 | 16 | 18 | |

| Terminal No. | 1 | 3 | 5 | 7 | 9 | 11 | 13 | 15 | 17 | COM |
|---|---|---|---|---|---|---|---|---|---|---|
| Valve No. | 1A | 3A | 5A | 7A | 8A | 9A | 10A | 11A | 12A | + |

| Terminal No. | 2 | 4 | 6 | 8 | 10 | 12 | 14 | 16 | 18 |
|---|---|---|---|---|---|---|---|---|---|
| Valve No. | 2A | 4A | 6A | 7B | 8B | 9B | 10B | 11B | 12B |

**Example 2**

**F10M9PJ-JR-T200-W DC24V stn.1～6 F10T1-A1 DC24V**
**stn.7～8 F10T2-A1 DC24V**
**stn.9 F10BPP**

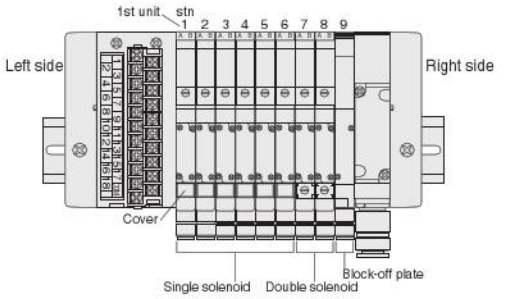


Number of units : 9 units
Wiring specification : **-T200**
Wiring connection specification : **-W** (double wiring)

(Top View)

| | | | | | | | | | | |
|---|---|---|---|---|---|---|---|---|---|---|
| 1 | 3 | 5 | 7 | 9 | 11 | 13 | 15 | 17 | COM | |
| | 2 | 4 | 6 | 8 | 10 | 12 | 14 | 16 | 18 | |

| Terminal No. | 1 | 3 | 5 | 7 | 9 | 11 | 13 | 15 | 17 | COM |
|---|---|---|---|---|---|---|---|---|---|---|
| Valve No. | 1A | 2A | 3A | 4A | 5A | 6A | 7A | 8A | 9A | + |

| Terminal No. | 2 | 4 | 6 | 8 | 10 | 12 | 14 | 16 | 18 |
|---|---|---|---|---|---|---|---|---|---|
| Valve No. | 1B | 2B | 3B | 4B | 5B | 6B | 7B | 8B | 9B |

Notes:
1. The valve No.1A, 1B, 2A, 2B··· numerals show the stn. numbers in order, while the letters A and B show the A and B sides of the solenoid.
2. The stn. numbers are counted from the left, 1, 2···, with the solenoid on top and the valve in front.
3. When selecting wiring connection specification **-W**, all wiring becomes double wiring, regardless of valve specifications.
4. Caution should be exercised that the block-off plate is always double wiring (allocated 2 control terminals to 1 unit), regardless of the wiring connection specifications.

## F Series Cable Assembly by Wiring Specification

A dedicated cable assembly is provided for each wiring specification.

## ■ Order codes

**FMA** - [ ] - [ ] - [ ]

Cable length: 0.5 - 20 m [1.6-65.6 ft.] (enter at 0.5 m pitch)
※Cable used UL STYLE NO.20266 150V 80℃ [176°F] AWG28 (7/0.127 [strands/mm])

Terminal processing
**Blank**: Loose wire [with dedicated label/No.]
**Y**: Y terminal (M3.5) [with marker tube/No.]

Types of dedicated cables
**100W** : -F100□□dedicated cable assembly
**101W** : -F101□□dedicated cable assembly
**200W** : -F200□□dedicated cable assembly
**201W** : -F201□□dedicated cable assembly
**260W** : -F260□□dedicated cable assembly
**250W** : -D250□□dedicated cable assembly
**251W** : -D251□□dedicated cable assembly

Note: Perform wiring operations correctly, while checking each pin location, connector No., label No., and marker tube No., etc.

### ●-F100□□dedicated cable assembly

**FMA-100W-□-□**

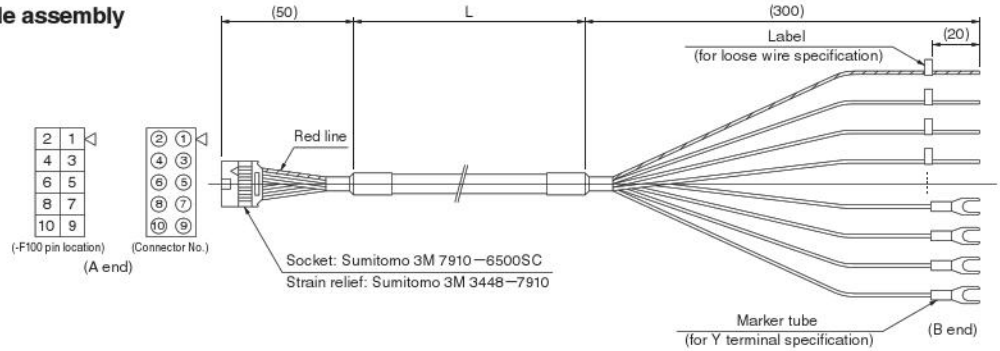


| | | | | | | | | | | | |
|---|---|---|---|---|---|---|---|---|---|---|---|
| A end | -F100 pin location | 1 | 2 | 3 | 4 | 5 | 6 | 7 | 8 | 9 | 10 |
| | Connector No. | ① | ② | ③ | ④ | ⑤ | ⑥ | ⑦ | ⑧ | ⑨ | ⑩ |
| B end | Label, marker tube No. | 1 | 2 | 3 | 4 | 5 | 6 | 7 | 8 | COM | COM |

### ●-F101□□dedicated cable assembly

**FMA-101W-□-□**

Note: When wiring specification is the **-F101□N** (no power terminal) type, the -F101 pin location No.9 on the manifold side is set to NC (unused pin).

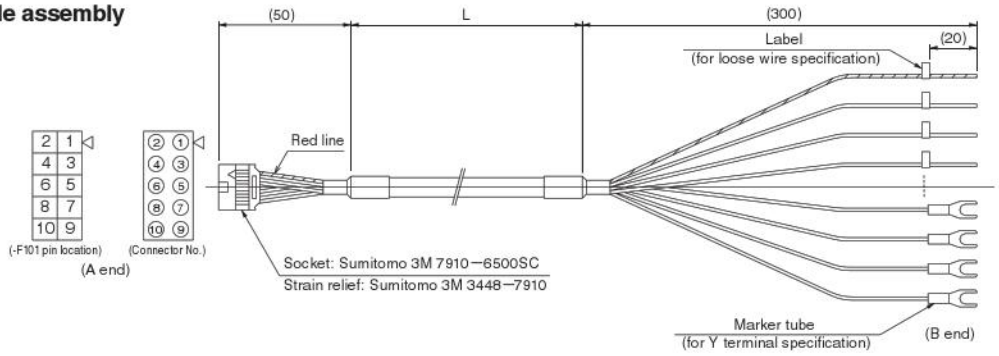


| | | | | | | | | | | | |
|---|---|---|---|---|---|---|---|---|---|---|---|
| A end | -F101 pin location | 1 | 2 | 3 | 4 | 5 | 6 | 7 | 8 | 9 | 10 |
| | Connector No. | ① | ② | ③ | ④ | ⑤ | ⑥ | ⑦ | ⑧ | ⑨ | ⑩ |
| B end | Label, marker tube No. | 1 | 2 | 3 | 4 | 5 | 6 | 7 | 8 | − | + |

### ●-F200□□dedicated cable assembly

**FMA-200W-□-□**

Note: When wiring specification is the **-F200□N** (no power terminal) type, the -F200 pin location No.17 and 18 on the manifold side are set to NC (unused pins).

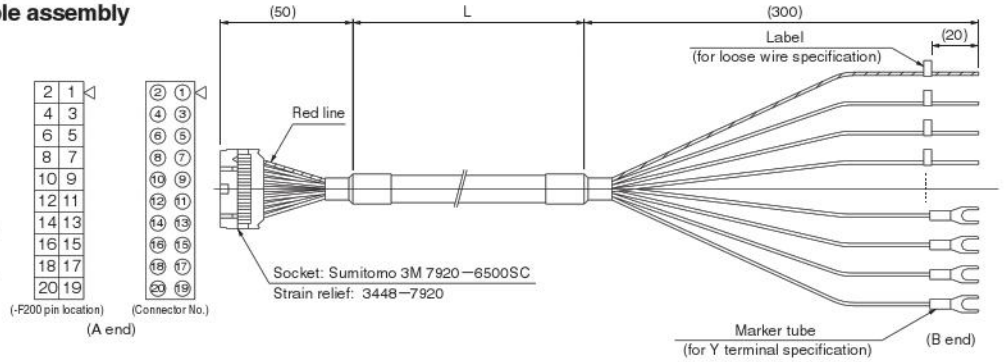


| | | | | | | | | | | | | | | | | | | | | | |
|---|---|---|---|---|---|---|---|---|---|---|---|---|---|---|---|---|---|---|---|---|---|
| A end | -F200 pin location | 1 | 2 | 3 | 4 | 5 | 6 | 7 | 8 | 9 | 10 | 11 | 12 | 13 | 14 | 15 | 16 | 17 | 18 | 19 | 20 |
| | Connector No. | ① | ② | ③ | ④ | ⑤ | ⑥ | ⑦ | ⑧ | ⑨ | ⑩ | ⑪ | ⑫ | ⑬ | ⑭ | ⑮ | ⑯ | ⑰ | ⑱ | ⑲ | ⑳ |
| B end | Label, marker tube No. | 1 | 2 | 3 | 4 | 5 | 6 | 7 | 8 | 9 | 10 | 11 | 12 | 13 | 14 | 15 | 16 | − | − | + | + |

## ●-F201□□dedicated cable assembly

**FMA-201W-□ - □**

Notes: 1. Be aware the pin location No. and connector No. are not the same.
2. When wiring specification is the **-F201□N** (no power terminal) type, the -F201 pin location No.9 and 19 on the manifold side are set to NC (unused pins).

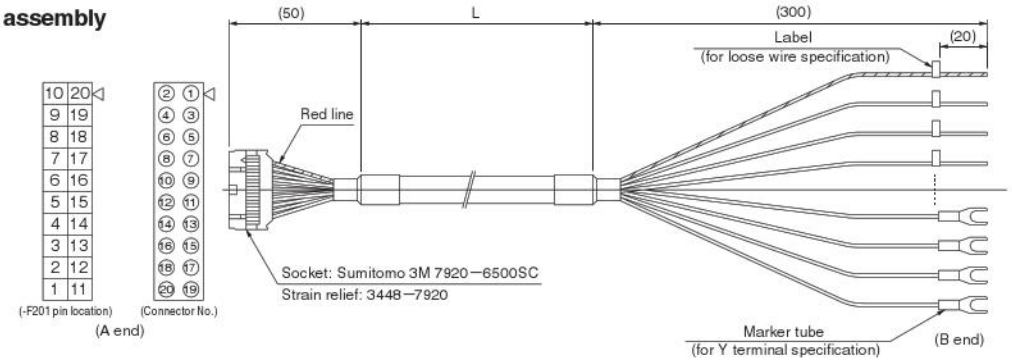


| | | | | | | | | | | | | | | | | | | | | | |
|---|---|---|---|---|---|---|---|---|---|---|---|---|---|---|---|---|---|---|---|---|---|
| A end | -F201 pin location | 1 | 2 | 3 | 4 | 5 | 6 | 7 | 8 | 9 | 10 | 11 | 12 | 13 | 14 | 15 | 16 | 17 | 18 | 19 | 20 |
| | Connector No. | ⑳ | ⑱ | ⑯ | ⑭ | ⑫ | ⑩ | ⑧ | ⑥ | ④ | ② | ⑲ | ⑰ | ⑮ | ⑬ | ⑪ | ⑨ | ⑦ | ⑤ | ③ | ① |
| B end | Label, marker tube No. | 1 | 2 | 3 | 4 | 5 | 6 | 7 | 8 | − | + | 9 | 10 | 11 | 12 | 13 | 14 | 15 | 16 | − | + |

## ●-F260□□dedicated cable assembly

**FMA-260W-□ - □**

Note: When wiring specification is the **-F260□N** (no power terminal) type, the -F260 pin location No.23 and 24 on the manifold side are set to NC (unused pins).

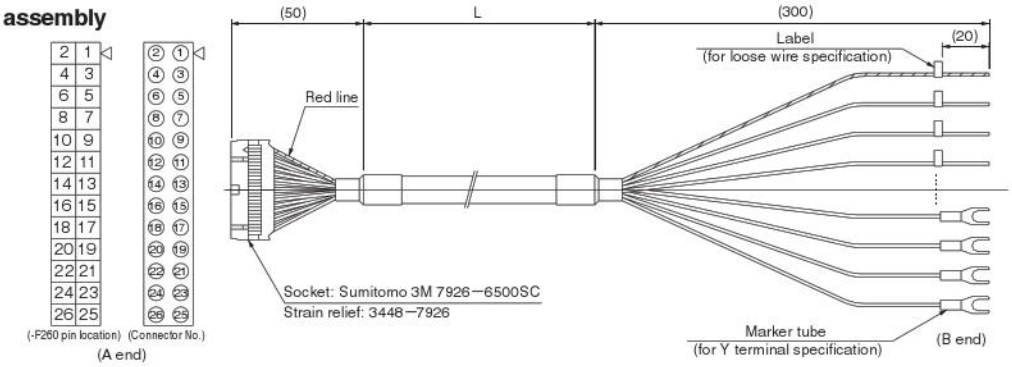


| | | | | | | | | | | | | | | | | | | | | | | | | | | | |
|---|---|---|---|---|---|---|---|---|---|---|---|---|---|---|---|---|---|---|---|---|---|---|---|---|---|---|---|
| A end | -F260 pin location | 1 | 2 | 3 | 4 | 5 | 6 | 7 | 8 | 9 | 10 | 11 | 12 | 13 | 14 | 15 | 16 | 17 | 18 | 19 | 20 | 21 | 22 | 23 | 24 | 25 | 26 |
| | Connector No. | ① | ② | ③ | ④ | ⑤ | ⑥ | ⑦ | ⑧ | ⑨ | ⑩ | ⑪ | ⑫ | ⑬ | ⑭ | ⑮ | ⑯ | ⑰ | ⑱ | ⑲ | ⑳ | ㉑ | ㉒ | ㉓ | ㉔ | ㉕ | ㉖ |
| B end | Label, marker tube No. | 1 | 2 | 3 | 4 | 5 | 6 | 7 | 8 | 9 | 10 | 11 | 12 | 13 | 14 | 15 | 16 | 17 | 18 | 19 | 20 | | | − | − | + | + |

## ●-D250□□dedicated cable assembly

**FMA-250W-□ - □**

Notes: 1. Be aware the pin location No. and connector No. are not the same.
2. When wiring specification is the **-D250□N** (no power terminal) type, the -D250 pin location No.20, 21 and 22 on the manifold side are set to NC (unused pins).

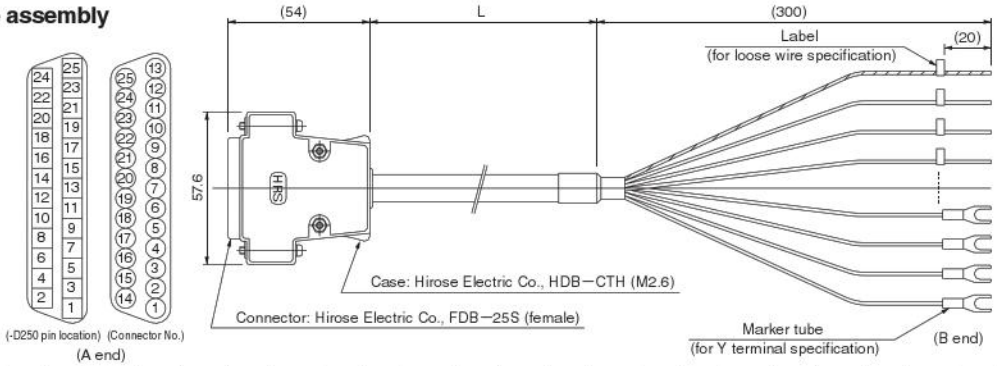


| | | | | | | | | | | | | | | | | | | | | | | | | | | | |
|---|---|---|---|---|---|---|---|---|---|---|---|---|---|---|---|---|---|---|---|---|---|---|---|---|---|---|---|
| A end | -D250 pin location | 1 | 2 | 3 | 4 | 5 | 6 | 7 | 8 | 9 | 10 | 11 | 12 | 13 | 14 | 15 | 16 | 17 | 18 | 19 | 20 | 21 | 22 | 23 | 24 | 25 |
| | Connector No. | ① | ⑭ | ② | ⑮ | ③ | ⑯ | ④ | ⑰ | ⑤ | ⑱ | ⑥ | ⑲ | ⑦ | ⑳ | ⑧ | ㉑ | ⑨ | ㉒ | ⑩ | ㉓ | ⑪ | ㉔ | ⑫ | ㉕ | ⑬ |
| B end | Label, marker tube No. | 1 | 2 | 3 | 4 | 5 | 6 | 7 | 8 | 9 | 10 | 11 | 12 | 13 | 14 | 15 | 16 | | | | − | − | − | + | + | + |

## ●-D251□□dedicated cable assembly

**FMA-251W-□ - □**

Note: When wiring specification is the **-D251□N** (no power terminal) type, the -D251 pin location No.12 and 13 on the manifold side are set to NC (unused pins).

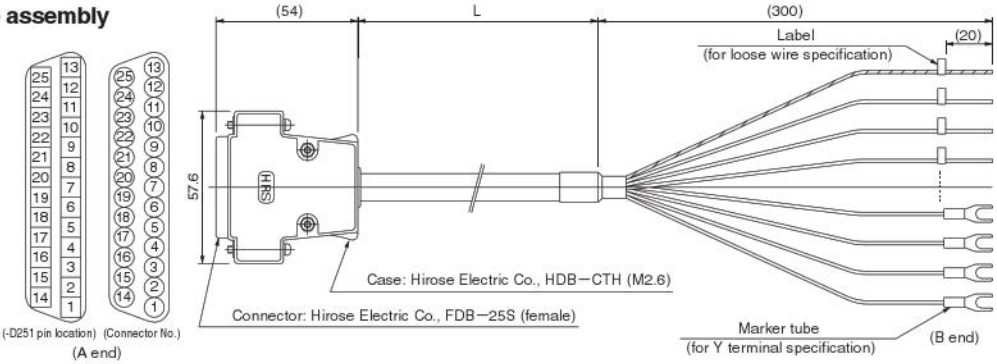


| | | | | | | | | | | | | | | | | | | | | | | | | | | | |
|---|---|---|---|---|---|---|---|---|---|---|---|---|---|---|---|---|---|---|---|---|---|---|---|---|---|---|---|
| A end | -D251 pin location | 1 | 2 | 3 | 4 | 5 | 6 | 7 | 8 | 9 | 10 | 11 | 12 | 13 | 14 | 15 | 16 | 17 | 18 | 19 | 20 | 21 | 22 | 23 | 24 | 25 |
| | Connector No. | ① | ② | ③ | ④ | ⑤ | ⑥ | ⑦ | ⑧ | ⑨ | ⑩ | ⑪ | ⑫ | ⑬ | ⑭ | ⑮ | ⑯ | ⑰ | ⑱ | ⑲ | ⑳ | ㉑ | ㉒ | ㉓ | ㉔ | ㉕ |
| B end | Label, marker tube No. | 1 | 2 | 3 | 4 | 5 | 6 | 7 | 8 | 9 | 10 | | − | − | 11 | 12 | 13 | 14 | 15 | 16 | 17 | 18 | 19 | 20 | + | + |

# SOLENOID VALVES
## F10 SERIES

## Contents


Specifications — 106

Dimensions of Single Valve Unit — 111

Dimensions of Monoblock Manifold — 114

Dimensions of Monoblock Manifold, Wire-saving Type — 117

Dimensions of PC Board Manifold — 119

Dimensions of Split Manifold Non-plug-in Type — 120

Dimensions of Split Manifold Plug-in Type — 122

Dimensions of Serial Transmission Compatible Manifold — 131




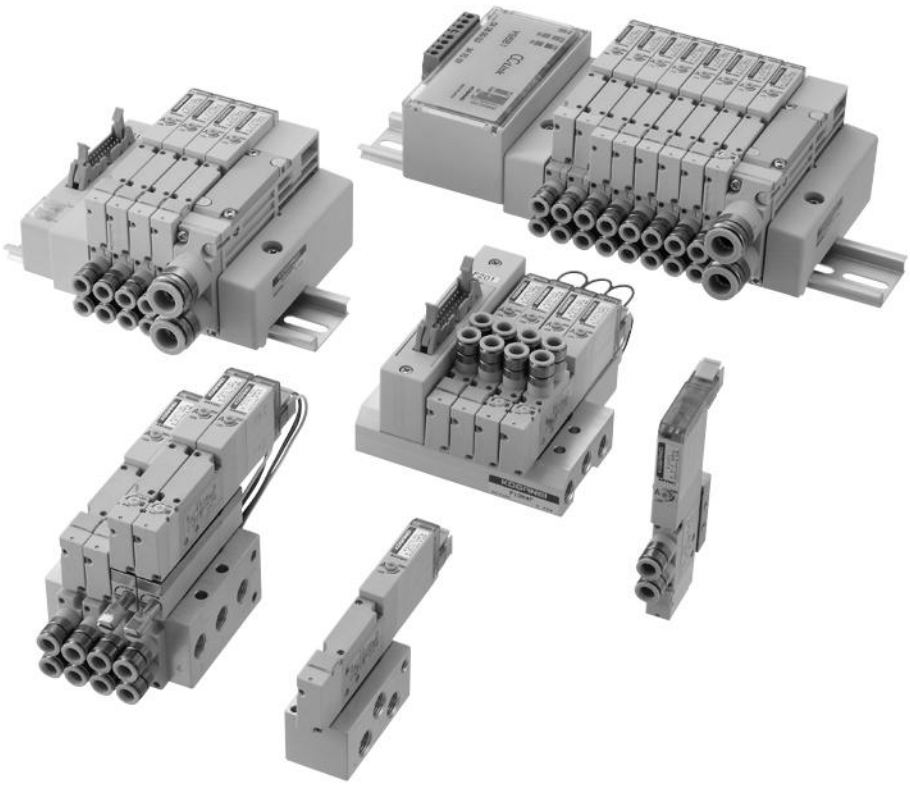

# F10 SERIES Specifications

## Specifications

### Basic Models and Valve Functions

| Item \ Basic model | F10□T0 | F10□T1<br>F10□T2 | F10□T3<br>F10□T4<br>F10□T5 | F10□TA<br>F10□TB<br>F10□TC |
|---|---|---|---|---|
| Number of positions | 2 positions | | 3 positions | 4 positions |
| Number of ports | 5 | | | Tandem 3-port |
| Valve function | Single solenoid only | Both single and double solenoid use | Closed center, Exhaust center, Pressure center | NC/NC, NO/NO, NC/NO |

Remark: For the optional specifications and order codes, see p.44-71.

### Specifications

| Item \ Basic model | | F10□T0<br>F10□T1<br>F10□T2 | F10□T3<br>F10□T4<br>F10□T5 | F10□TA<br>F10□TB<br>F10□TC | F10□T0G<br>F10□T1G<br>F10□T2G | F10□T3G<br>F10□T4G<br>F10□T5G | F10□T0V<br>F10□T1V<br>F10□T2V | F10□T3V |
|---|---|---|---|---|---|---|---|---|
| Media | | Air | | | | | | |
| Operation type | | Internal pilot type | | | External pilot type (for positive pressure) | | External pilot type (for vacuum) | |
| Flow rate characteristics | Sonic conductance C $dm^3/(s \cdot bar)$ Note1 | 0.97 | 0.93 | 0.75 | 0.97 | 0.93 | 0.97 | 0.93 |
| | Effective area Note2 $mm^2$ (Cv) | 4.8 (0.27) | 4.6 (0.25) | 3.7 (0.21) | 4.8 (0.27) | 4.6 (0.25) | 4.8 (0.27) | 4.6 (0.25) |
| Port size Note3 | | M5×0.8, 10-32UNF, dual use fitting for φ4 and φ6, Rc1/8, NPT1/8 | | | | | | |
| Lubrication | | Not required | | | | | | |
| Operating pressure range | Main valve | 0.2～0.7 MPa [29～102 psi.] | | | 0～0.7 MPa [0～102 psi.] Note4 | | −100 kPa～0.15 MPa [−29.53 in.Hg～22 psi.] | |
| | External pilot | —— | | | 0.2～0.7 MPa [29～102 psi.] Note4 | | 0.2～0.7 MPa [29～102 psi.] | |
| Proof pressure | MPa [psi.] | 1.05 [152] | | | | | | |
| Response time Note5 ON/OFF ms | 12VDC, 24VDC | 15/15(20) or below | 15/20 (25) or below | 15/20 (25) or below | 15/15 (20) or below | 15/20 (25) or below | 15/15 (20) or below | 15/20 (25) or below |
| | 100VAC | 15/15 or below | 15/20 or below | —— | 15/15 or below | 15/20 or below | 15/15 or below | 15/20 or below |
| Maximum operating frequency | Hz | 5 | | | | | | |
| Minimum time to energize for self holding Note6 | ms | 50 | —— | | 50 | —— | 50 | —— |
| Operating temperature range (atmosphere and media) | °C [°F] | 5～50 [41～122] | | | | | | |
| Shock resistance | $m/s^2$[G] | 294.2 [30] | | | | | | |
| Mounting direction | | Any | | | | | | |

Notes: 1. For details, see the flow rate characteristics on p.108.
2. The effective area is a calculated value, and not a measured value.
3. For details, see the port size on p.107.
4. When the main valve pressure is 0.2～0.7 MPa [29～102 psi.], set the external pilot pressure to the main valve pressure or higher, and 0.7 MPa [102 psi.] or less.
5. Values when air pressure is 0.5 MPa [73 psi.]. For switching phase timing in the AC specification, add a maximum of 5 ms to the response time. The values for 2-position valves are those when used as a single solenoid, and the values for 3-position valves are those when switching from the neutral position of closed center. Values in parentheses ( ) are for low-current type.
6. When used as a double solenoid valve. Excludes **T0.**

Remark: Specification values are based on Koganei test standards.

## Solenoid Specifications

| Item \ Rated voltage | | | 12VDC | 24VDC (Standard type) | 24VDC (Low-current type) | 100VAC | | 120VAC | |
|---|---|---|---|---|---|---|---|---|---|
| Voltage range | | V | 10.8～13.2 (12±10%) | 21.6～26.4 (24±10%) | 21.6～26.4 (24±10%) | 90～110 (100±10%) | | 108～132 (120±10%) | |
| Rated frequency | | Hz | — | — | — | 50 | 60 | 50 | 60 |
| Standard | Current (when rated voltage is applied) | mA (r.m.s) | 33 | 17 | — | 8 | | 8.3 | |
| Standard | Power consumption | W | 0.4 | 0.4 | — | 0.8 VA | | 1 VA | |
| Low-current type | Current (when rated voltage is applied) | Starting mA | — | — | 17 | — | | — | |
| Low-current type | | Holding mA | | | 4.2 | | | | |
| Low-current type | Power consumption | Starting W | — | — | 0.4 | — | | — | |
| Low-current type | | Holding W | | | 0.1 | | | | |
| Low-current type | Starting time (standard) | ms | — | — | 70 | — | | — | |
| Allowable leakage current | | mA | 2.0 | 1.0 | 1.0 | 1.0 | | 1.0 | |
| Type of insulation | | | Type B | | | | | | |
| Insulation resistance Note1 | | MΩ | Over 100 | | | | | | |
| Color of LED indicator Note2 | | | 14(SA) : Red, 12(SB) : Green | | | | | | |
| Surge suppression (as standard) | | | Surge absorption transistor | | Flywheel diode | Bridge diode | | | |

Notes: 1. Value at 500VDC megger.
2. The color of the **T0** indicator is red only.

Remark: Specification values are based on Koganei test standards.

## Cylinder Operating Speed

### How to obtain cylinder speed

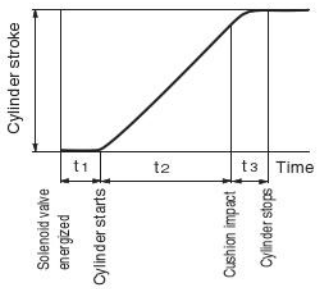


### Measuring conditions

- Air pressure : 0.5 MPa [73 psi.]
- Piping (outer diameter × inner diameter × length) : $\phi 6 \times \phi 4 \times 1000$ mm [39 in.]
- Fitting : Quick fitting TS6-01
- Load ratio $= \frac{\text{Load}}{\text{Cylinder theoretical thrust}}$ (%)
- Cylinder stroke : 150 mm [5.91 in.]

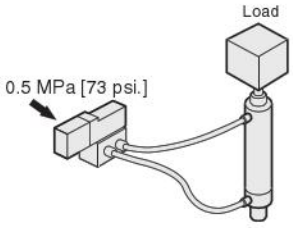


### Maximum operating speed

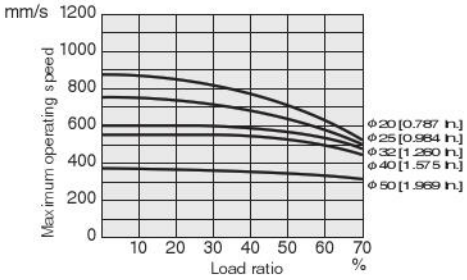


1 mm/s = 0.0394 in./sec.

### Delay time

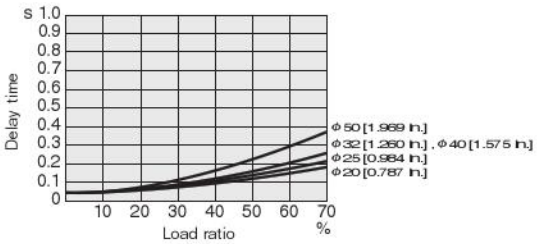


Note: Delay time may vary according to the cylinder stroke.

## Flow Rate

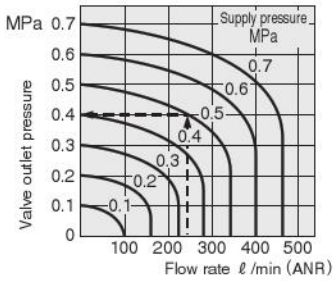


1 MPa = 145 psi., 1 ℓ/min = 0.0353 ft.³/min.

**How to read the graph**

When the supply pressure is 0.5 MPa [73 psi.] and flow rate is 240 ℓ/min [8.47 ft.³/min.] (ANR), the valve outlet pressure becomes 0.4 MPa [58 psi.].

## Port Size

| Description/Piping specification | | PR | X (P2) | 4 (A), 2 (B) | 1 (P), 3 (R2), 5 (R1), 3, 5 (R) |
|---|---|---|---|---|---|
| With sub-base | | M5×0.8, 10-32UNF | M5×0.8, 10-32UNF | Rc1/8, NPT1/8 | Rc1/8, NPT1/8 |
| Single unit | With female thread block | — | — | M5×0.8, 10-32UNF | M5×0.8, 10-32UNF |
| | With dual use fitting block | — | — | Dual use fitting for $\phi 4$ and $\phi 6$ | M5×0.8, 10-32UNF |
| | With single use fitting block | — | — | $\phi 4$ or $\phi 6$ | M5×0.8, 10-32UNF |
| Manifold | Monoblock type with female thread block, and PC board type with female thread block | M5×0.8, 10-32UNF | M5×0.8, 10-32UNF | M5×0.8, 10-32UNF | Rc1/8, NPT1/8 |
| | Monoblock type with fitting block, and PC board type with fitting block | M5×0.8, 10-32UNF | M5×0.8, 10-32UNF | Dual use fitting for $\phi 4$ and $\phi 6$ | Rc1/8, NPT1/8 |
| | Monoblock type with single use fitting block, and PC board type with single use fitting block | M5×0.8, 10-32UNF | M5×0.8, 10-32UNF | $\phi 4$ or $\phi 6$ | Rc1/8, NPT1/8 |
| | Split type with female thread block, and serial transmission type with female thread block | — | M5×0.8, 10-32UNF | M5×0.8, 10-32UNF | Rc1/4, NPT1/4 |
| | Split type with fitting block, and serial transmission type with fitting block | — | M5×0.8, 10-32UNF | Dual use fitting for $\phi 4$ and $\phi 6$ | Dual use fitting for $\phi 8$ and $\phi 10$ |
| | Split type with single use fitting block, and serial transmission type with single use fitting block | — | M5×0.8, 10-32UNF | $\phi 4$ or $\phi 6$ | Single use fitting for $\phi 8$ or $\phi 10$ |

## Flow Rate Characteristics

### ● When used as a single unit

| Basic model | 1(P)→2(B)/1(P)→4(A) | | 2(B)→3(R2)/4(A)→5(R1) | |
|---|---|---|---|---|
| | Sonic conductance C dm³/(s·bar) | Critical pressure ratio b | Sonic conductance C dm³/(s·bar) | Critical pressure ratio b |
| F10□T0-A2<br>F10□T1-A2<br>F10□T2-A2 | 0.85 | 0.14 | 0.85 | 0.26 |
| F10□T3-A2<br>F10□T4-A2<br>F10□T5-A2 | 0.82 | 0.13 | 0.82 | 0.29 |
| F10□TA-A2<br>F10□TB-A2<br>F10□TC-A2 | 0.68 | 0.30 | 0.69 | 0.30 |
| F10□T0-F3<br>F10□T1-F3<br>F10□T2-F3 | 0.73 | 0.29 | 0.58 | 0.47 |
| F10□T3-F3<br>F10□T4-F3<br>F10□T5-F3 | 0.69 | 0.26 | 0.57 | 0.46 |
| F10□TA-F3<br>F10□TB-F3<br>F10□TC-F3 | 0.61 | 0.28 | 0.54 | 0.44 |
| F10□T0-F4<br>F10□T1-F4<br>F10□T2-F4 | 0.54 | 0.39 | 0.53 | 0.37 |
| F10□T3-F4<br>F10□T4-F4<br>F10□T5-F4 | 0.53 | 0.43 | 0.51 | 0.34 |
| F10□TA-F4<br>F10□TB-F4<br>F10□TC-F4 | 0.50 | 0.32 | 0.50 | 0.30 |

| Basic model | 1(P)→2(B)/1(P)→4(A) | | 2(B)→3(R2)/4(A)→5(R1) | |
|---|---|---|---|---|
| | Sonic conductance C dm³/(s·bar) | Critical pressure ratio b | Sonic conductance C dm³/(s·bar) | Critical pressure ratio b |
| F10□T0-F5<br>F10□T1-F5<br>F10□T2-F5 | 0.57 | 0.39 | 0.54 | 0.38 |
| F10□T3-F5<br>F10□T4-F5<br>F10□T5-F5 | 0.57 | 0.41 | 0.54 | 0.40 |
| F10□TA-F5<br>F10□TB-F5<br>F10□TC-F5 | 0.53 | 0.33 | 0.51 | 0.31 |
| F10□T0-F6<br>F10□T1-F6<br>F10□T2-F6 | 0.64 | 0.47 | 0.56 | 0.42 |
| F10□T3-F6<br>F10□T4-F6<br>F10□T5-F6 | 0.61 | 0.42 | 0.56 | 0.40 |
| F10□TA-F6<br>F10□TB-F6<br>F10□TC-F6 | 0.57 | 0.34 | 0.52 | 0.40 |

Note: For **-F4**, value assumes **TS6-M5M** is mounted on the piping port.

### ● When mounted on a manifold

| Valve model \ Manifold model | | F10M□F(FP) | | F10M□A(AP) | | F10M□N(P)(S) | |
|---|---|---|---|---|---|---|---|
| | | 1(P)→2(B)/1(P)→4(A) | 2(B)→3(R2)/4(A)→5(R1) | 1(P)→2(B)/1(P)→4(A) | 2(B)→3(R2)/4(A)→5(R1) | 1(P)→2(B)/1(P)→4(A) | 2(B)→3(R2)/4(A)→5(R1) |
| | | Sonic conductance C dm³/(s·bar) | | Sonic conductance C dm³/(s·bar) | | Sonic conductance C dm³/(s·bar) | |
| F10□T0□<br>F10□T1□<br>F10□T2□ | Outlet port dual use fitting for φ4 and φ6 ※These are the cases of φ6. | 0.84 | 0.82 | 0.75 | 0.76 | 0.97 | 0.93 |
| F10□T3□<br>F10□T4□<br>F10□T5□ | | 0.83 | 0.78 | 0.73 | 0.72 | 0.93 | 0.89 |
| F10□TA□<br>F10□TB□<br>F10□TC□ | | 0.70 | 0.70 | 0.64 | 0.66 | 0.75 | 0.73 |
| F10□T0□<br>F10□T1□<br>F10□T2□ | Outlet port φ4 fitting | 0.66 | 0.72 | 0.63 | 0.69 | 0.72 | 0.79 |
| F10□T3□<br>F10□T4□<br>F10□T5□ | | 0.65 | 0.70 | 0.62 | 0.67 | 0.70 | 0.77 |
| F10□TA□<br>F10□TB□<br>F10□TC□ | | 0.60 | 0.64 | 0.56 | 0.62 | 0.63 | 0.67 |
| F10□T0□<br>F10□T1□<br>F10□T2□ | Outlet port φ6 fitting | 0.72 | 0.81 | 0.67 | 0.73 | 0.80 | 0.83 |
| F10□T3□<br>F10□T4□<br>F10□T5□ | | 0.71 | 0.73 | 0.66 | 0.69 | 0.78 | 0.80 |
| F10□TA□<br>F10□TB□<br>F10□TC□ | | 0.64 | 0.66 | 0.58 | 0.63 | 0.68 | 0.69 |

Notes: 1. When the individual air supply spacer or the individual air exhaust spacer, the back pressure prevention valve, or the stop valve is used, sonic conductance decreases by about 30%.
2. For the flow rate characteristics of other outlet ports, consult us.

Remark: Specification values are based on Koganei test standards.

# Mass

## Single Valve Unit Mass

g [oz.]

| F10□T□□ | F10□T□□-A1 | F10□T□□-A2 | F10□T□□-FJ | F10□T□□-FJ5 | F10□T□□-FJ6 |
|---|---|---|---|---|---|
| Outlet portion<br>None | Outlet portion<br>With plate | Outlet portion<br>With plate | Outlet portion<br>With dual use fitting block | Outlet portion<br>With $\phi$4 fitting block | Outlet portion<br>With $\phi$6 fitting block |
| Inlet portion<br>None | Inlet portion<br>None | Inlet portion<br>With A type sub-base | Inlet portion<br>None | Inlet portion<br>None | Inlet portion<br>None |
| 44 [1.55] | 47 [1.66] | 116 [4.09] | 55 [1.94] | 57 [2.01] | 60 [2.12] |

g [oz.]

| F10□T□□-FM | F10□T□□-F3 | F10□T□□-F4 | F10□T□□-F5 | F10□T□□-F6 |
|---|---|---|---|---|
| Outlet portion<br>With female thread block | Outlet portion<br>With dual use fitting block | Outlet portion<br>With female thread block | Outlet portion<br>With $\phi$4 fitting block | Outlet portion<br>With $\phi$6 fitting block |
| Inlet portion<br>None | Inlet portion<br>With female thread block | Inlet portion<br>With female thread block | Inlet portion<br>With female thread block | Inlet portion<br>With female thread block |
| 51 [1.80] | 62 [2.19] | 58 [2.05] | 64 [2.26] | 67 [2.36] |

Basic Type **F10□T0** is 10 g [0.35 oz.] less than the mass shown above.

## Monoblock Manifold Mass (single valve unit included)

g [oz.]

| Monoblock manifold | Mass calculation of each unit | | | |
|---|---|---|---|---|
| | 4(A), 2(B) ports outlet specifications | | | |
| | Female thread block | Dual use fitting block | $\phi$4 fitting block | $\phi$6 fitting block |
| A type | (97×n)+79 [(3.42×n)+2.79] | (101×n)+79 [(3.56×n)+2.79] | (103×n)+79 [(3.63×n)+2.79] | (106×n)+79 [(3.74×n)+2.79] |
| F type | (71×n)+57 [(2.50×n)+2.01] | (75×n)+57 [(2.65×n)+2.01] | (77×n)+57 [(2.72×n)+2.01] | (80×n)+57 [(2.82×n)+2.01] |

g [oz.]

| Monoblock manifold | Additional mass (wire-saving type) | | |
|---|---|---|---|
| | Wiring specification | | |
| | **-F100N, -F101N** | **-F200N, -F201N, -F260N** | **-D250N, -D251N** |
| A type | 164+4n [5.78+0.14n] | 166+4n [5.86+0.14n] | 170+4n [6.00+0.14n] |
| F type | 112+4n [3.95+0.14n] | 114+4n [4.02+0.14n] | 118+4n [4.16+0.14n] |

Calculation example : **F10M8AM**

**stn.1～stn.8 F10T1-A1-PS DC24V**

(97×8)+79 = 855 g [30.16 oz.]

When mounting the block-off plate, subtract 50 g [1.76 oz] per unit from the above calculation result.

When mounting the **F10□T0** specification valve, subtract 10 g [0.35 oz.] per unit from the above calculation result.

## PC Board Manifold Mass (single valve unit included)

g [oz.]

| PC board manifold | Mass calculation of each unit | | | | |
|---|---|---|---|---|---|
| | 4(A), 2(B) ports outlet specifications | | | | Circuit board and connector portion |
| | Female thread block | Dual use fitting block | $\phi$4 fitting block | $\phi$6 fitting block | |
| A type | (97×n)+79 [(3.42×n)+2.79] | (101×n)+79 [(3.56×n)+2.79] | (103×n)+79 [(3.63×n)+2.79] | (106×n)+79 [(3.74×n)+2.79] | (2×n)+29 [(0.07×n)+1.02] |
| F type | (76×n)+83 [(2.68×n)+2.93] | (80×n)+83 [(2.82×n)+2.93] | (82×n)+83 [(2.89×n)+2.93] | (85×n)+83 [(3.00×n)+2.93] | |

Calculation example : **F10M8APM-F201-W**

**stn.1～stn.8 F10T1-A1-PP DC24V**

(97×8)+79+(2×8)+29=900 g [31.75 oz.]

When mounting the block-off plate, subtract 50 g [1.76 oz] per unit from the above calculation result.

When mounting the **F10□T0** specification valve, subtract 10 g [0.35 oz.] per unit from the above calculation result.

## Mass of Split Manifold and Serial Transmission Compatible Manifold

Because the valve and manifold have the same output specifications, their mass is the same. The mass can only be changed by choosing a different type of inlet/outlet block.

### Mass of Split Manifold Non-Plug-in Type (single valve unit included)

g [oz.]

| | Mass calculation of each unit | | | |
|---|---|---|---|---|
| | 4(A), 2(B) ports outlet specifications | | | |
| Non-plug-in type | Female thread block | Dual use fitting block | φ4 fitting block | φ6 fitting block |
| | (75×n)+120 [(2.65×n)+4.23] | (79×n)+120 [(2.79×n)+4.23] | (81×n)+120 [(2.86×n)+4.23] | (84×n)+120 [(2.96×n)+4.23] |

g [oz.]

| Additional mass | | | |
|---|---|---|---|
| Piping block specification | | | |
| Female thread block | Dual use fitting block | φ8 fitting block | φ10 fitting block |
| 111 [3.92] | 125 [4.41] | 149 [5.26] | 159 [5.61] |

Calculation example : **F10M8N-MR**
**stn.1～stn.8 F10T1-A1-PS DC24V**
(75×8)+120+111=831 g [29.31 oz.]
When mounting the block-off plate, subtract 50 g [1.76 oz] per unit from the above calculation result.
When mounting the **F10□T0** specification valve, subtract 10 g [0.35 oz.] per unit from the above calculation result.

### Mass of Split Manifold Plug-in Type/Serial Transmission Compatible Manifold (single valve unit included)

g [oz.]

| | Mass calculation of each unit | | | |
|---|---|---|---|---|
| | 4(A), 2(B) ports outlet specifications | | | |
| Plug-in type<br>Serial transmission compatible manifold | Female thread block | Dual use fitting block | φ4 fitting block | φ6 fitting block |
| | (79×n)+120 [(2.79×n)+4.23] | (83×n)+120 [(2.93×n)+4.23] | (85×n)+120 [(3.00×n)+4.23] | (88×n)+120 [(3.10×n)+4.23] |

g [oz.]

| Additional mass | | | |
|---|---|---|---|
| Piping block specification | | | |
| Female thread block | Dual use fitting block | φ8 fitting block | φ10 fitting block |
| 111 [3.92] | 125 [4.41] | 149 [5.26] | 159 [5.61] |

g [oz.]

| Additional mass | | | | |
|---|---|---|---|---|
| Wiring block specification | | | | |
| **-F100□□, -F101□□** | **-F200□□, -F201□□, -F260□□** | **-D250□□, -D251□□** | **-D370NU** | **-T200** |
| 32 [1.13] | 34 [1.20] | 39 [1.38] | 72 [2.54] | 110 [3.88] |

g [oz.]

| Additional mass | | | |
|---|---|---|---|
| Serial transmission block specification | | | |
| Stand-alone type | Integrated type | EtherCAT | EtherNet/IP |
| 231 [8.15] | 138 [4.87] | 100 [3.53] | 110 [3.88] |

Calculation example : **F10M8PM-MR-F201 DC24V**
**stn.1～stn.8 F10T1-A1 DC24V**
(79×8)+120+111+34=897 g [31.64 oz.]
When mounting the block-off plate, subtract 50 g [1.76 oz] per unit from the above calculation result.
When mounting the **F10□T0** specification valve, subtract 10 g [0.35 oz.] per unit from the above calculation result.

## F10T Valve specifications -F3-PS

With outlet port dual use fitting block
With inlet port female thread block
S type plug connector

* For T0 Type dimensions, see page 112.

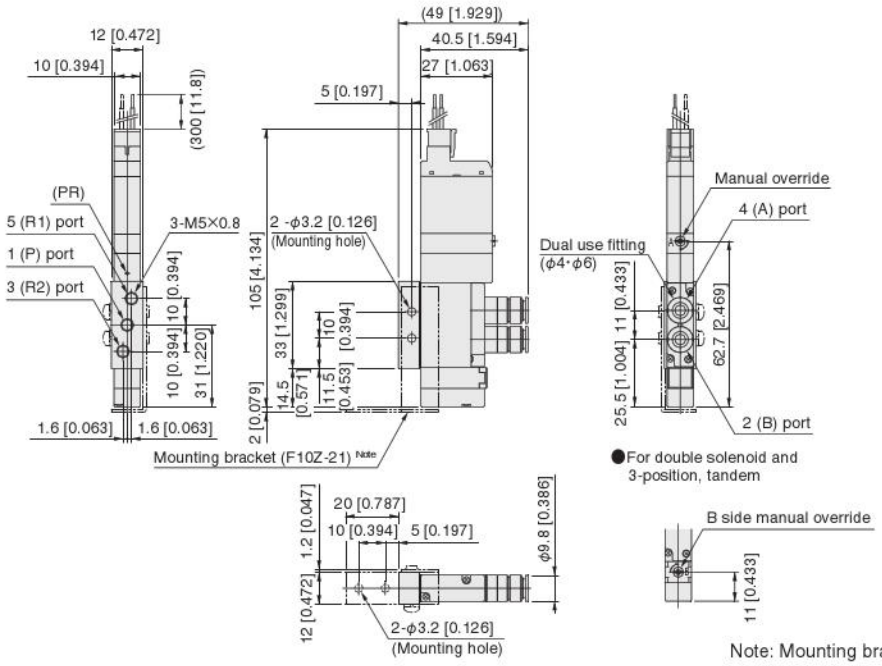


Note: Mounting brackets are additional parts (options).

## F10T Valve specifications -F4-PS
## F10T Valve specifications -F4H-PS

With outlet port female thread block
With inlet port female thread block
S type plug connector

* For T0 Type dimensions, see page 112.

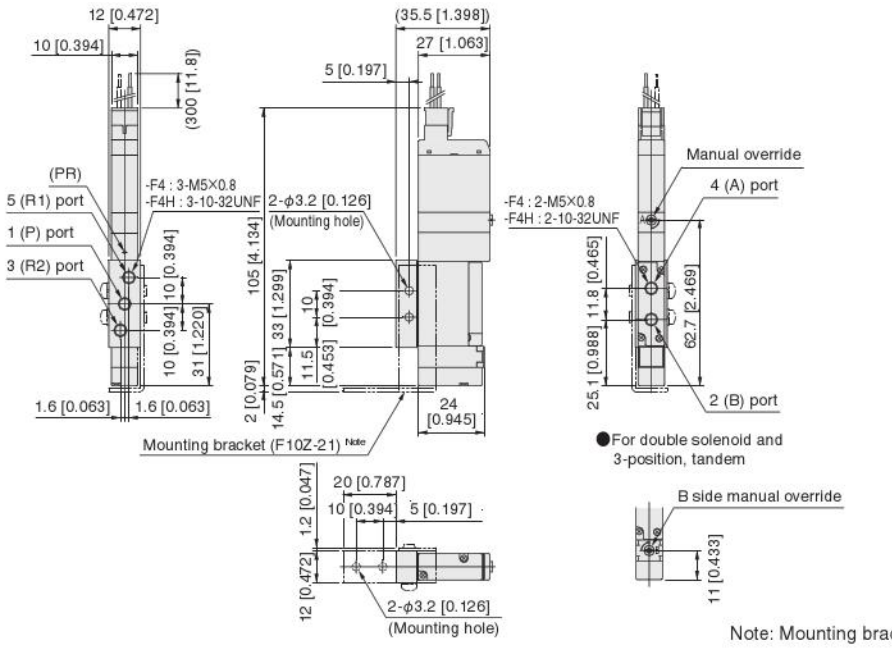


Note: Mounting brackets are additional parts (options).

# F10T0-F□-PS

With outlet port single use fitting block
With inlet port female thread block
S type plug connector

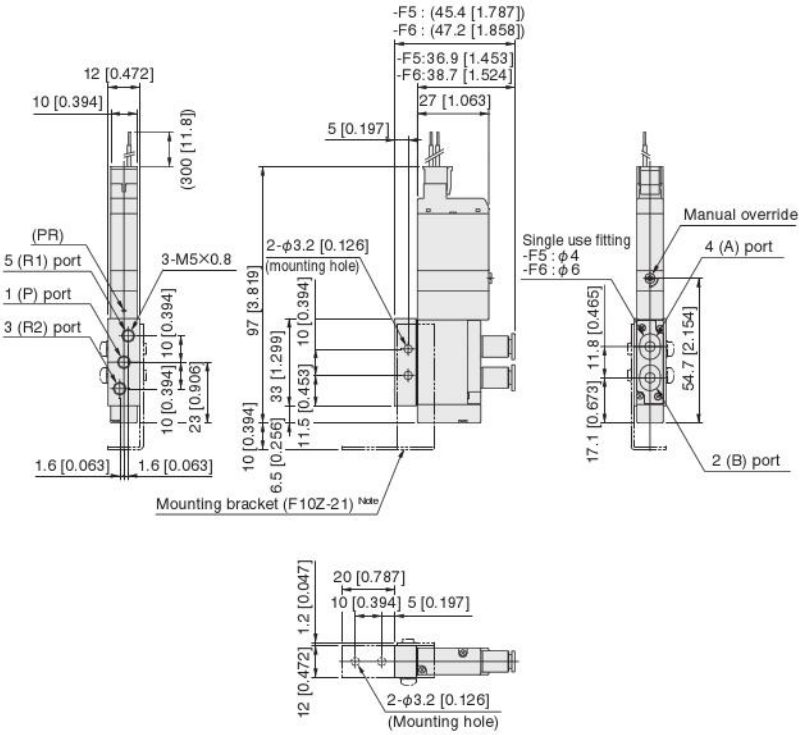


Note: Mounting brackets are additional parts (options).

## F10T Valve specifications Operation system -A2-PS
## F10T Valve specifications Operation system -A2H-PS

With A-type sub-base
S type plug connector

### ● Internal pilot specifications

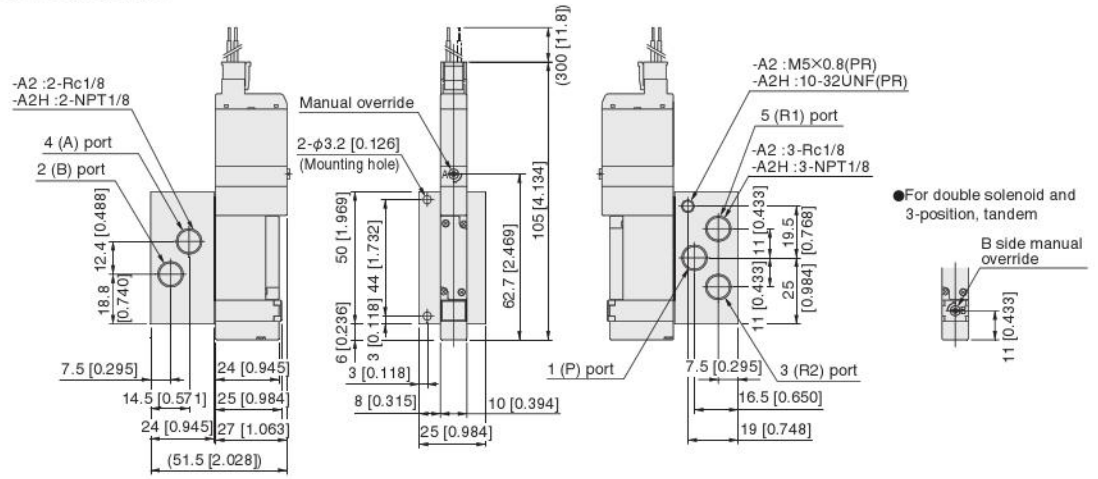


Note: The overall valve length of the T0 type is 8 mm [0.315 in] shorter (end cover side protrusion is 8 mm [0.315 in] less).

### ● External pilot specifications

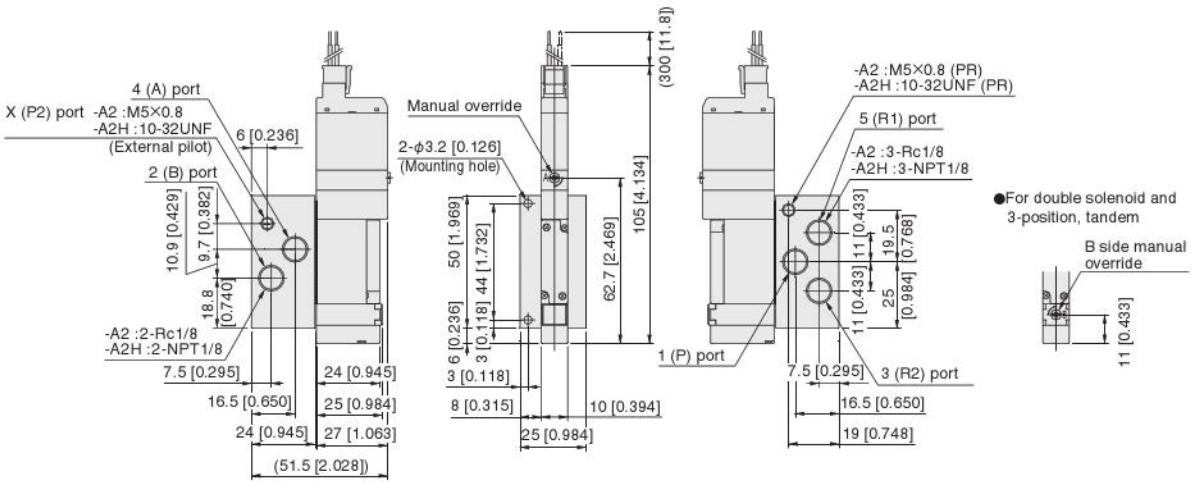


Note: The overall valve length of the T0 type is 8 mm [0.315 in] shorter (end cover side protrusion is 8 mm [0.315 in] less).

## Options

### ● L-type plug connector: -PL

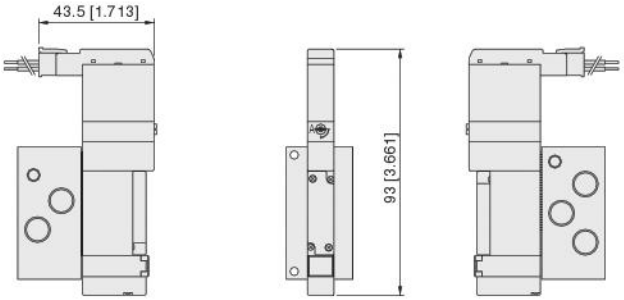


### ● Manual lever: -R

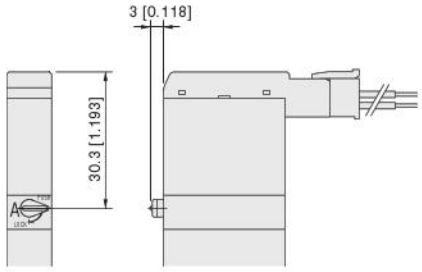


Note: The overall valve length of the T0 type is 8 mm [0.315 in] shorter (end cover side protrusion is 8 mm [0.315 in] less).

## F10M [Number of valves] A J/M/L [Pilot specifications] (Base piping type)

Monoblock manifold A type
With manifold outlet port dual use fitting block
S type plug connector

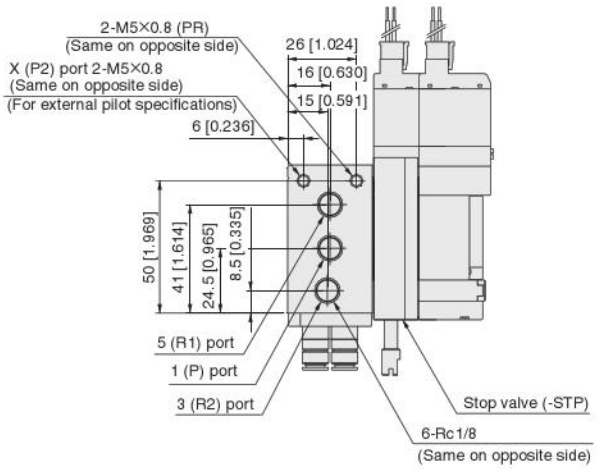


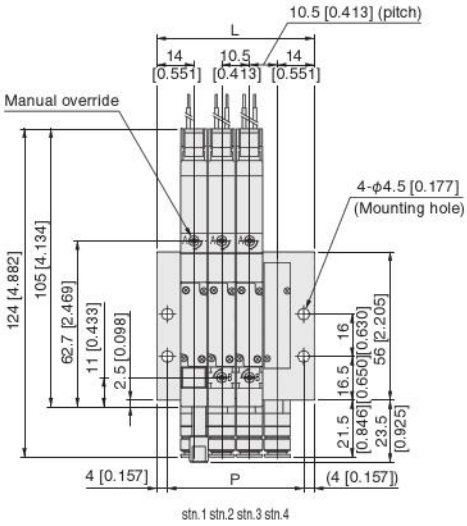


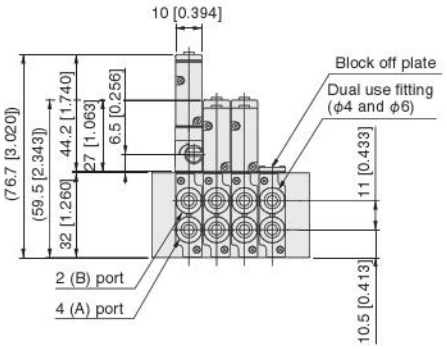


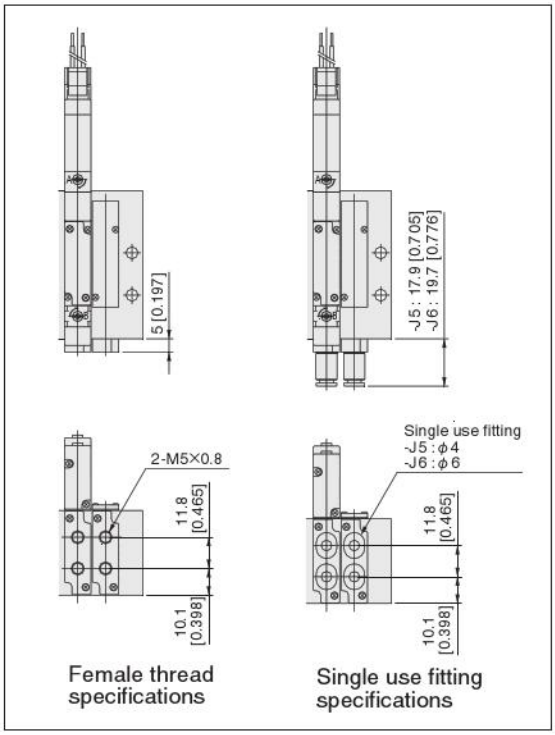


## Unit dimensions

| Number of units | L | P |
|---|---|---|
| 2 | 38.5 [1.516] | 30.5 [1.201] |
| 3 | 49.0 [1.929] | 41.0 [1.614] |
| 4 | 59.5 [2.343] | 51.5 [2.028] |
| 5 | 70.0 [2.756] | 62.0 [2.441] |
| 6 | 80.5 [3.169] | 72.5 [2.854] |
| 7 | 91.0 [3.583] | 83.0 [3.268] |
| 8 | 101.5 [3.996] | 93.5 [3.681] |
| 9 | 112.0 [4.409] | 104.0 [4.094] |
| 10 | 122.5 [4.823] | 114.5 [4.508] |
| 11 | 133.0 [5.236] | 125.0 [4.921] |
| 12 | 143.5 [5.650] | 135.5 [5.335] |
| 13 | 154.0 [6.063] | 146.0 [5.748] |
| 14 | 164.5 [6.476] | 156.5 [6.161] |
| 15 | 175.0 [6.890] | 167.0 [6.575] |
| 16 | 185.5 [7.303] | 177.5 [6.988] |
| 17 | 196.0 [7.717] | 188.0 [7.402] |
| 18 | 206.5 [8.130] | 198.5 [7.815] |
| 19 | 217.0 [8.543] | 209.0 [8.228] |
| 20 | 227.5 [8.957] | 219.5 [8.642] |

## F10M Number of valves AHL Pilot specifications (Base piping type)

Monoblock manifold A type
With manifold outlet port female thread block
S type plug connector

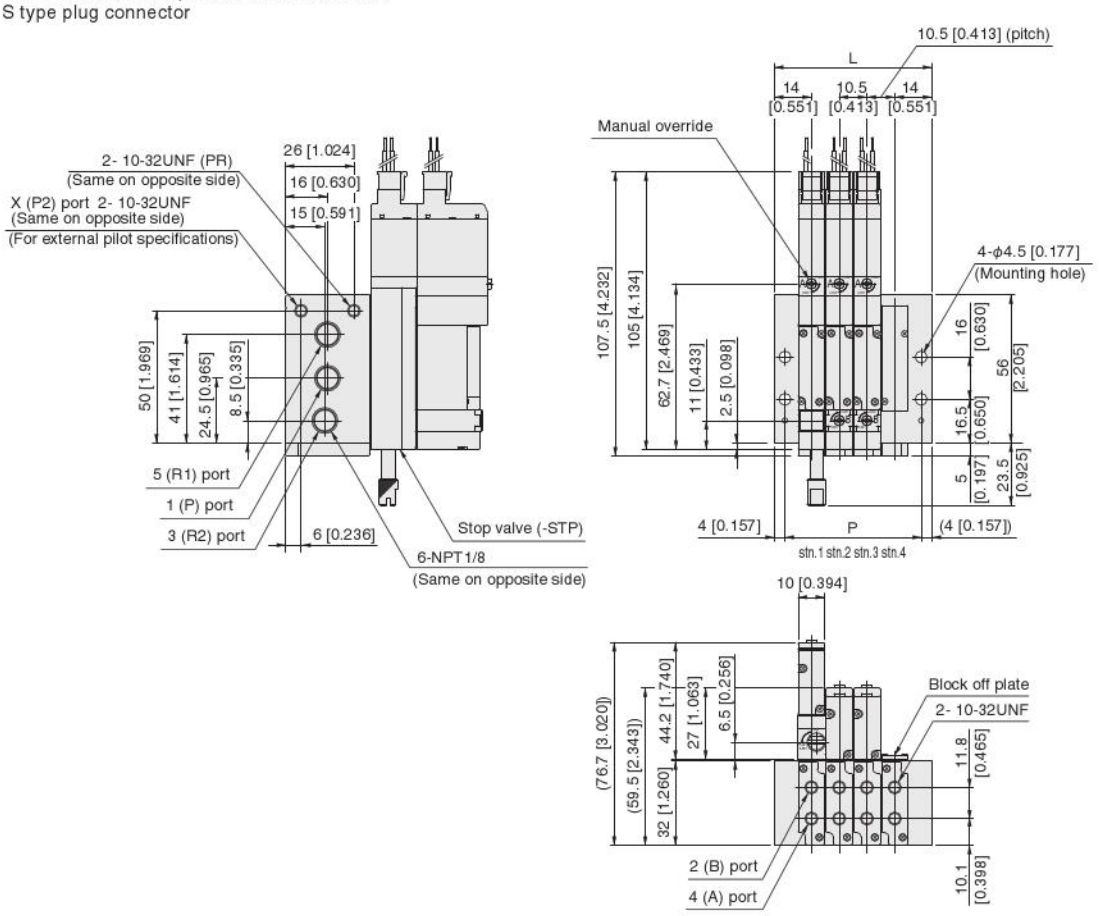


### Unit dimensions

| Number of units | L | P |
|---|---|---|
| 2 | 38.5 [1.516] | 30.5 [1.201] |
| 3 | 49.0 [1.929] | 41.0 [1.614] |
| 4 | 59.5 [2.343] | 51.5 [2.028] |
| 5 | 70.0 [2.756] | 62.0 [2.441] |
| 6 | 80.5 [3.169] | 72.5 [2.854] |
| 7 | 91.0 [3.583] | 83.0 [3.268] |
| 8 | 101.5 [3.996] | 93.5 [3.681] |
| 9 | 112.0 [4.409] | 104.0 [4.094] |
| 10 | 122.5 [4.823] | 114.5 [4.508] |
| 11 | 133.0 [5.236] | 125.0 [4.921] |
| 12 | 143.5 [5.650] | 135.5 [5.335] |
| 13 | 154.0 [6.063] | 146.0 [5.748] |
| 14 | 164.5 [6.476] | 156.5 [6.161] |
| 15 | 175.0 [6.890] | 167.0 [6.575] |
| 16 | 185.5 [7.303] | 177.5 [6.988] |
| 17 | 196.0 [7.717] | 188.0 [7.402] |
| 18 | 206.5 [8.130] | 198.5 [7.815] |
| 19 | 217.0 [8.543] | 209.0 [8.228] |
| 20 | 227.5 [8.957] | 219.5 [8.642] |

## F10M Number of valves F (Direct piping type)

Monoblock manifold F type
With valve outlet port dual use fitting block
S type plug connector

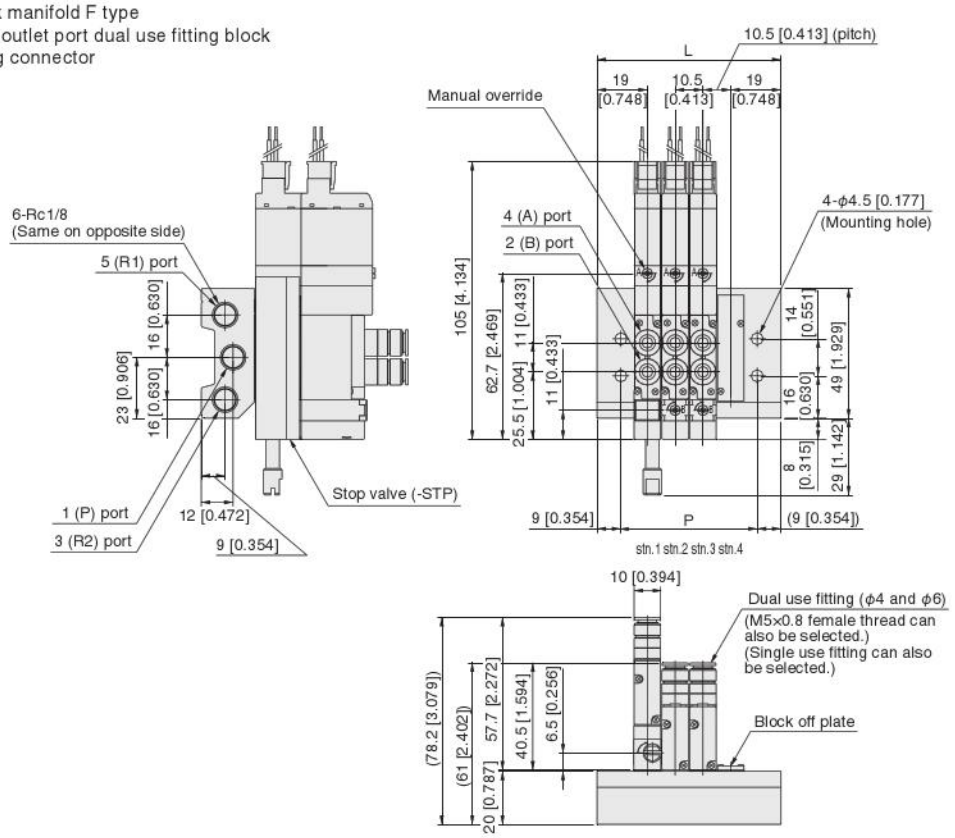


Note: The overall valve length of the T0 type is 8 mm [0.315 in] shorter (end cover side protrusion is 8 mm [0.315 in] less).

### Unit dimensions

| Number of units | L | P |
|---|---|---|
| 2 | 48.5 [1.909] | 30.5 [1.201] |
| 3 | 59.0 [2.323] | 41.0 [1.614] |
| 4 | 69.5 [2.736] | 51.5 [2.028] |
| 5 | 80.0 [3.150] | 62.0 [2.441] |
| 6 | 90.5 [3.563] | 72.5 [2.854] |
| 7 | 101.0 [3.976] | 83.0 [3.268] |
| 8 | 111.5 [4.390] | 93.5 [3.681] |
| 9 | 122.0 [4.803] | 104.0 [4.094] |
| 10 | 132.5 [5.217] | 114.5 [4.508] |
| 11 | 143.0 [5.630] | 125.0 [4.921] |
| 12 | 153.5 [6.043] | 135.5 [5.335] |
| 13 | 164.0 [6.457] | 146.0 [5.748] |
| 14 | 174.5 [6.870] | 156.5 [6.161] |
| 15 | 185.0 [7.283] | 167.0 [6.575] |
| 16 | 195.5 [7.697] | 177.5 [6.988] |
| 17 | 206.0 [8.110] | 188.0 [7.402] |
| 18 | 216.5 [8.524] | 198.5 [7.815] |
| 19 | 227.0 [8.937] | 209.0 [8.228] |
| 20 | 237.5 [9.350] | 219.5 [8.642] |

## F10M Number of valves FH (Direct piping type)

Monoblock manifold F type
With valve outlet port female thread block
S type plug connector

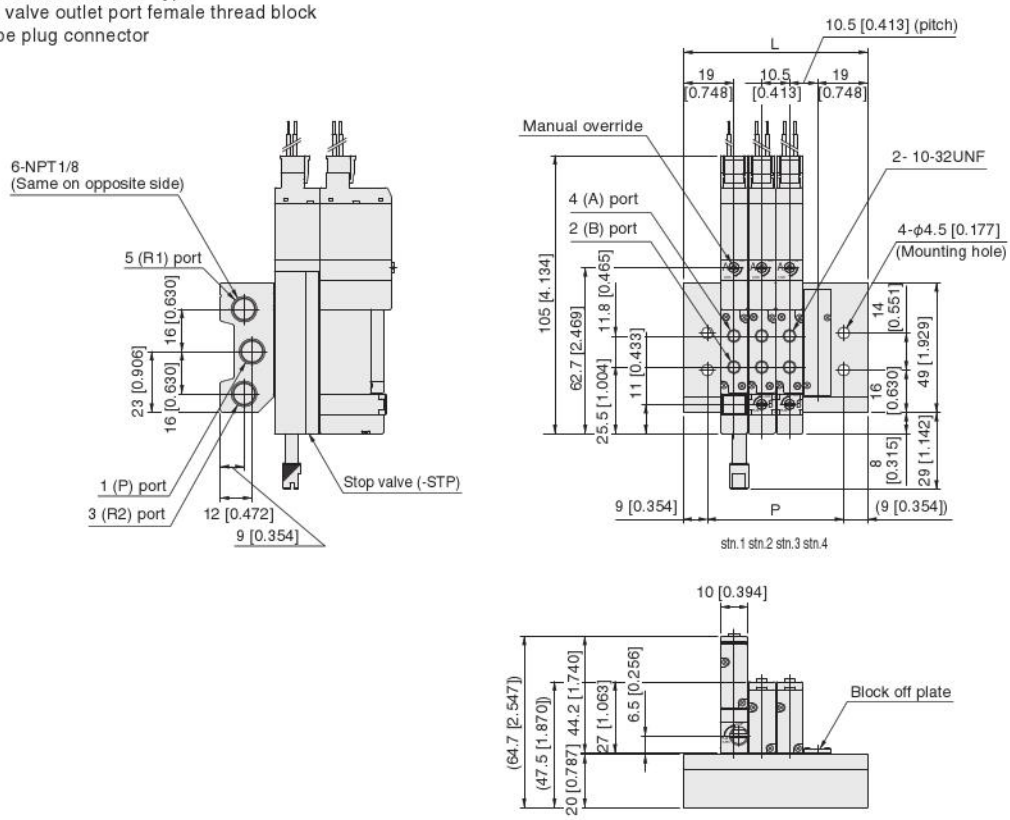


Note: The overall valve length of the T0 type is 8 mm [0.315 in] shorter (end cover side protrusion is 8 mm [0.315 in] less).

### Unit dimensions

| Number of units | L | P |
|---|---|---|
| 2 | 48.5 [1.909] | 30.5 [1.201] |
| 3 | 59.0 [2.323] | 41.0 [1.614] |
| 4 | 69.5 [2.736] | 51.5 [2.028] |
| 5 | 80.0 [3.150] | 62.0 [2.441] |
| 6 | 90.5 [3.563] | 72.5 [2.854] |
| 7 | 101.0 [3.976] | 83.0 [3.268] |
| 8 | 111.5 [4.390] | 93.5 [3.681] |
| 9 | 122.0 [4.803] | 104.0 [4.094] |
| 10 | 132.5 [5.217] | 114.5 [4.508] |
| 11 | 143.0 [5.630] | 125.0 [4.921] |
| 12 | 153.5 [6.043] | 135.5 [5.335] |
| 13 | 164.0 [6.457] | 146.0 [5.748] |
| 14 | 174.5 [6.870] | 156.5 [6.161] |
| 15 | 185.0 [7.283] | 167.0 [6.575] |
| 16 | 195.5 [7.697] | 177.5 [6.988] |
| 17 | 206.0 [8.110] | 188.0 [7.402] |
| 18 | 216.5 [8.524] | 198.5 [7.815] |
| 19 | 227.0 [8.937] | 209.0 [8.228] |
| 20 | 237.5 [9.350] | 219.5 [8.642] |

## F10M Number of valves A J/M/L Pilot specifications (Base piping type)

Monoblock manifold A type, wire saving type
With manifold outlet port dual use fitting block
These dimensions show flat cable connector 20-pin specifications

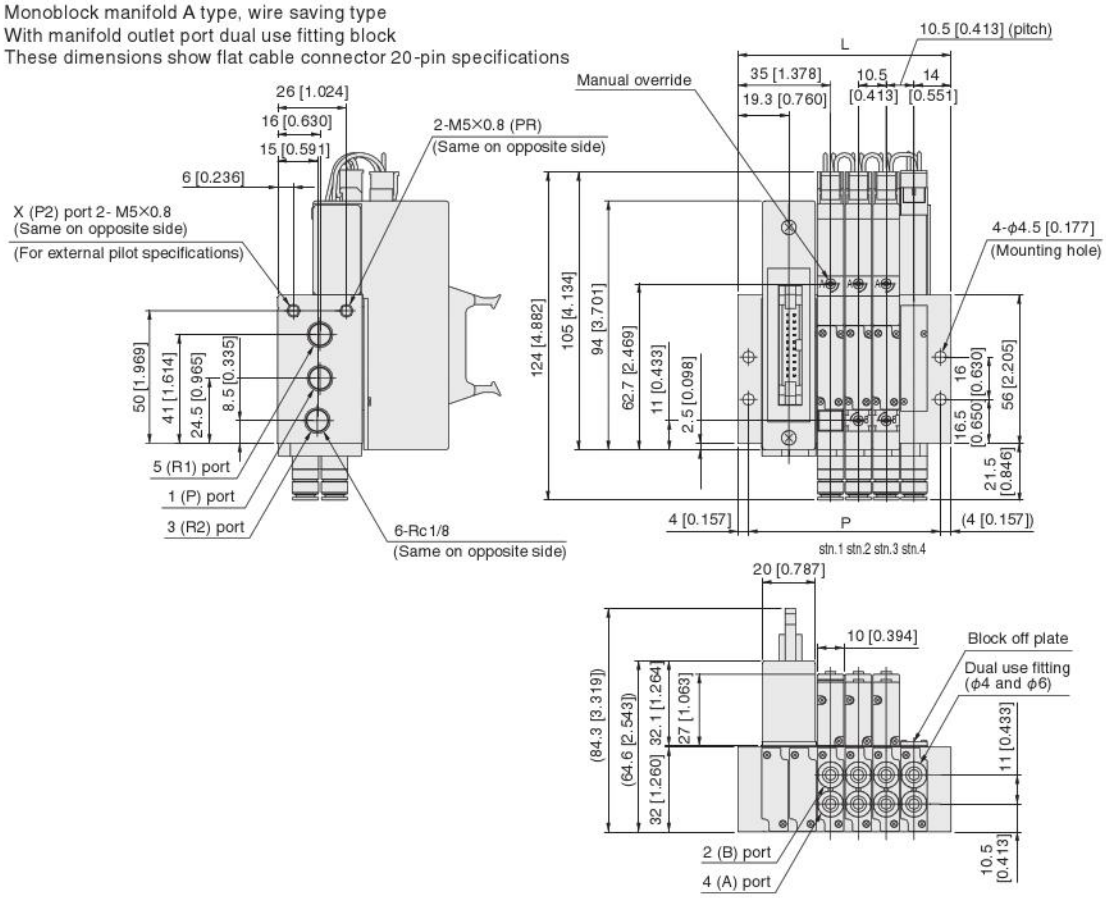


### Unit dimensions

| Number of units | L | P |
|---|---|---|
| 2 | 59.5 [2.343] | 51.5 [2.028] |
| 3 | 70.0 [2.756] | 62.0 [2.441] |
| 4 | 80.5 [3.169] | 72.5 [2.854] |
| 5 | 91.0 [3.583] | 83.0 [3.268] |
| 6 | 101.5 [3.996] | 93.5 [3.681] |
| 7 | 112.0 [4.409] | 104.0 [4.094] |
| 8 | 122.5 [4.823] | 114.5 [4.508] |
| 9 | 133.0 [5.236] | 125.0 [4.921] |
| 10 | 143.5 [5.650] | 135.5 [5.335] |
| 11 | 154.0 [6.063] | 146.0 [5.748] |
| 12 | 164.5 [6.476] | 156.5 [6.161] |
| 13 | 175.0 [6.890] | 167.0 [6.575] |
| 14 | 185.5 [7.303] | 177.5 [6.988] |
| 15 | 196.0 [7.717] | 188.0 [7.402] |
| 16 | 206.5 [8.130] | 198.5 [7.815] |
| 17 | 217.0 [8.543] | 209.0 [8.228] |
| 18 | 227.5 [8.957] | 219.5 [8.642] |
| 19 | 238.0 [9.370] | 230.0 [9.055] |
| 20 | 248.5 [9.783] | 240.5 [9.469] |

## F10M Number of valves AHL Pilot specifications (Base piping type)

Monoblock manifold A type, wire saving type
With manifold outlet port female thread block
These dimensions show flat cable connector 20-pin specifications

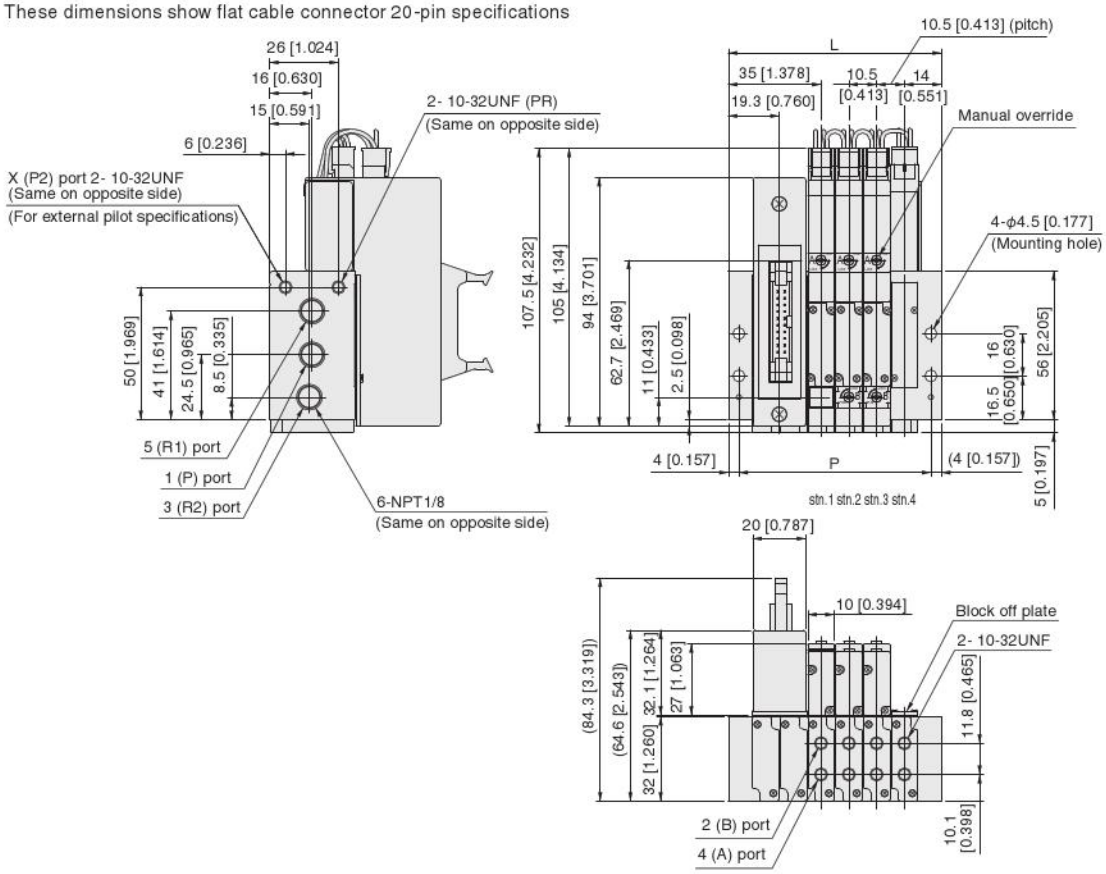


### Unit dimensions

| Number of units | L | P |
|---|---|---|
| 2 | 59.5 [2.343] | 51.5 [2.028] |
| 3 | 70.0 [2.756] | 62.0 [2.441] |
| 4 | 80.5 [3.169] | 72.5 [2.854] |
| 5 | 91.0 [3.583] | 83.0 [3.268] |
| 6 | 101.5 [3.996] | 93.5 [3.681] |
| 7 | 112.0 [4.409] | 104.0 [4.094] |
| 8 | 122.5 [4.823] | 114.5 [4.508] |
| 9 | 133.0 [5.236] | 125.0 [4.921] |
| 10 | 143.5 [5.650] | 135.5 [5.335] |
| 11 | 154.0 [6.063] | 146.0 [5.748] |
| 12 | 164.5 [6.476] | 156.5 [6.161] |
| 13 | 175.0 [6.890] | 167.0 [6.575] |
| 14 | 185.5 [7.303] | 177.5 [6.988] |
| 15 | 196.0 [7.717] | 188.0 [7.402] |
| 16 | 206.5 [8.130] | 198.5 [7.815] |
| 17 | 217.0 [8.543] | 209.0 [8.228] |
| 18 | 227.5 [8.957] | 219.5 [8.642] |
| 19 | 238.0 [9.370] | 230.0 [9.055] |
| 20 | 248.5 [9.783] | 240.5 [9.469] |

## F10M Number of valves F (Direct piping type)

Monoblock manifold F type, wire saving type
With valve outlet port dual use fitting block
These dimensions show flat cable connector 20-pin specifications

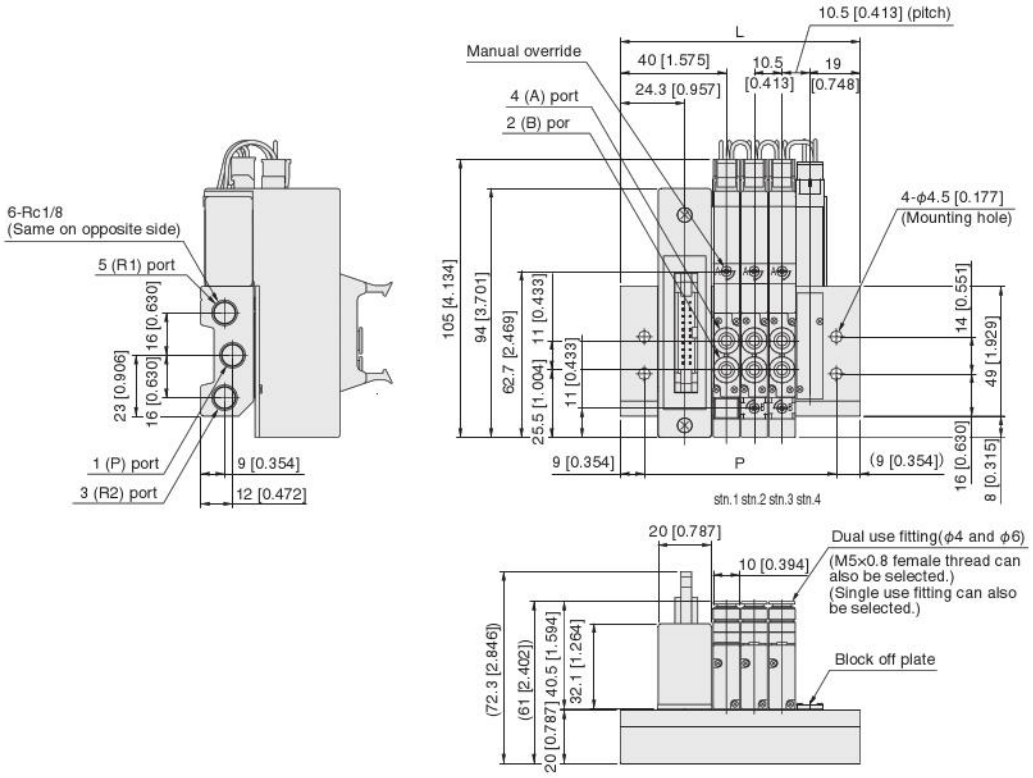


### Unit dimensions

| Number of units | L | P |
|---|---|---|
| 2 | 69.5 [2.736] | 51.5 [2.028] |
| 3 | 80.0 [3.150] | 62.0 [2.441] |
| 4 | 90.5 [3.563] | 72.5 [2.854] |
| 5 | 101.0 [3.976] | 83.0 [3.268] |
| 6 | 111.5 [4.390] | 93.5 [3.681] |
| 7 | 122.0 [4.803] | 104.0 [4.094] |
| 8 | 132.5 [5.217] | 114.5 [4.508] |
| 9 | 143.0 [5.630] | 125.0 [4.921] |
| 10 | 153.5 [6.043] | 135.5 [5.335] |
| 11 | 164.0 [6.457] | 146.0 [5.748] |
| 12 | 174.5 [6.870] | 156.5 [6.161] |
| 13 | 185.0 [7.283] | 167.0 [6.575] |
| 14 | 195.5 [7.697] | 177.5 [6.988] |
| 15 | 206.0 [8.110] | 188.0 [7.402] |
| 16 | 216.5 [8.524] | 198.5 [7.815] |
| 17 | 227.0 [8.937] | 209.0 [8.228] |
| 18 | 237.5 [9.350] | 219.5 [8.642] |
| 19 | 248.0 [9.764] | 230.0 [9.055] |
| 20 | 258.5 [10.177] | 240.5 [9.469] |

## F10M Number of valves FH (Direct piping type)

Monoblock manifold F type, wire saving type
With valve outlet port female thread block
These dimensions show flat cable connector 20-pin specifications

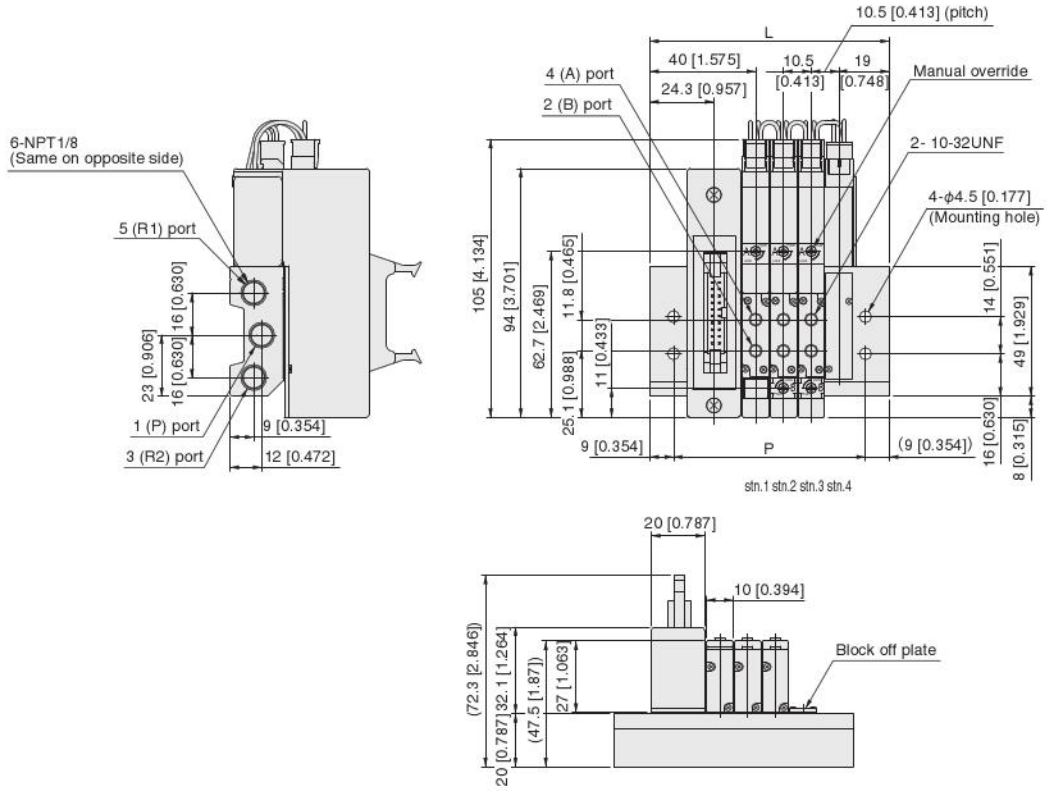


### Unit dimensions

| Number of units | L | P |
|---|---|---|
| 2 | 69.5 [2.736] | 51.5 [2.028] |
| 3 | 80.0 [3.150] | 62.0 [2.441] |
| 4 | 90.5 [3.563] | 72.5 [2.854] |
| 5 | 101.0 [3.976] | 83.0 [3.268] |
| 6 | 111.5 [4.390] | 93.5 [3.681] |
| 7 | 122.0 [4.803] | 104.0 [4.094] |
| 8 | 132.5 [5.217] | 114.5 [4.508] |
| 9 | 143.0 [5.630] | 125.0 [4.921] |
| 10 | 153.5 [6.043] | 135.5 [5.335] |
| 11 | 164.0 [6.457] | 146.0 [5.748] |
| 12 | 174.5 [6.870] | 156.5 [6.161] |
| 13 | 185.0 [7.283] | 167.0 [6.575] |
| 14 | 195.5 [7.697] | 177.5 [6.988] |
| 15 | 206.0 [8.110] | 188.0 [7.402] |
| 16 | 216.5 [8.524] | 198.5 [7.815] |
| 17 | 227.0 [8.937] | 209.0 [8.228] |
| 18 | 237.5 [9.350] | 219.5 [8.642] |
| 19 | 248.0 [9.764] | 230.0 [9.055] |
| 20 | 258.5 [10.177] | 240.5 [9.469] |

## F10M Number of valves AP J/M/L Pilot specifications (Base piping type)

PC board manifold A type
With manifold outlet port dual use fitting block

Note: Mounted valve example shows -W wiring specifications.
In the case of -S wiring specifications, the mounted valve becomes T0 or T1 type.

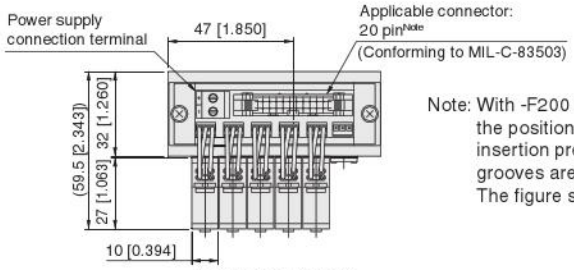


Note: With -F200 and -F201, the positions of the mis-insertion prevention grooves are reversed. The figure shows -F200.

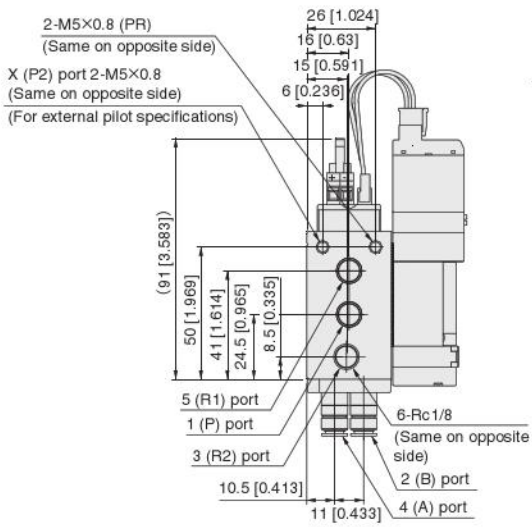


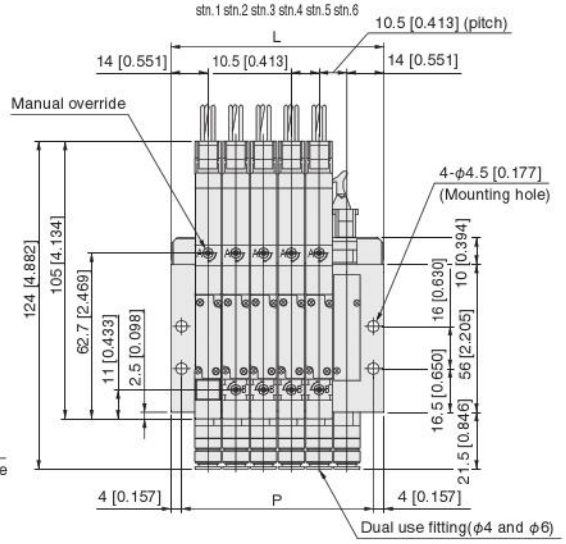


### Unit dimensions

| Number of units | L | P |
|---|---|---|
| 6 | 80.5 [3.169] | 72.5 [2.854] |
| 8 | 101.5 [3.996] | 93.5 [3.681] |
| 10 | 122.5 [4.823] | 114.5 [4.508] |
| 12 | 143.5 [5.650] | 135.5 [5.335] |
| 14 | 164.5 [6.476] | 156.5 [6.161] |
| 16 | 185.5 [7.303] | 177.5 [6.988] |

Note: Wiring specifications
For -S
6, 8, 10, 12, 14, 16 units

For -W
Only 6 and 8 units selectable

## F10M Number of valves FP (Direct piping type)

PC board manifold F type
With valve outlet port dual use fitting block

Note: Mounted valve example shows -W wiring specifications.
In the case of -S wiring specifications, the mounted valve becomes T0 or T1 type.

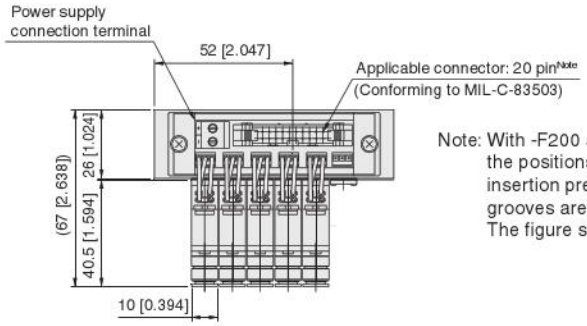


Note: With -F200 and -F201, the positions of the mis-insertion prevention grooves are reversed. The figure shows -F200.

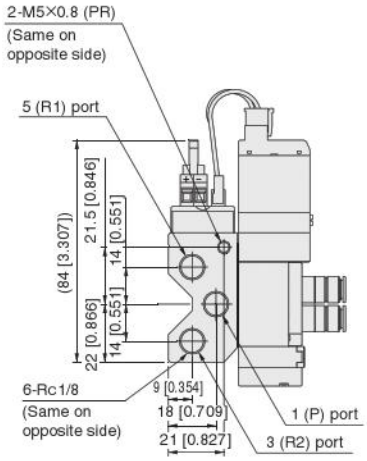


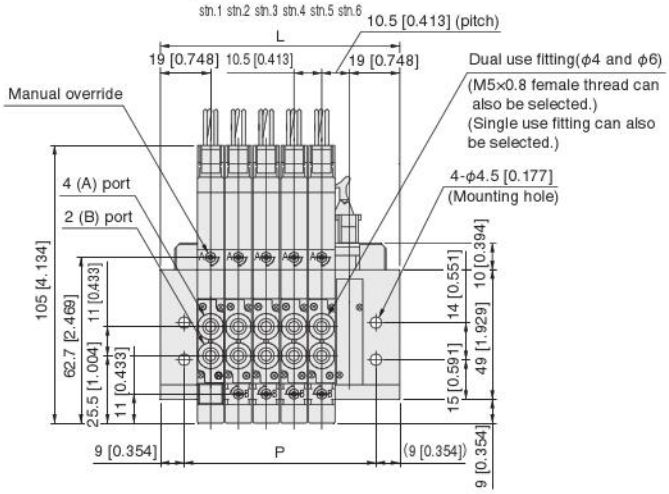


### Unit dimensions

| Number of units | L | P |
|---|---|---|
| 6 | 90.5 [3.563] | 72.5 [2.854] |
| 8 | 111.5 [4.390] | 93.5 [3.681] |
| 10 | 132.5 [5.217] | 114.5 [4.508] |
| 12 | 153.5 [6.043] | 135.5 [5.335] |
| 14 | 174.5 [6.870] | 156.5 [6.161] |
| 16 | 195.5 [7.697] | 177.5 [6.988] |

Note: Wiring specifications
For -S
6, 8, 10, 12, 14, 16 units

For -W
Only 6 and 8 units selectable

Note: The overall valve length of the T0 type is 8 mm [0.315 in] shorter (end cover side protrusion is 8 mm [0.315 in] less).

## F10M [Number of valves] N J/M/L [Pilot specifications] (Base piping type)

With manifold outlet port dual use fitting block
S type plug connector

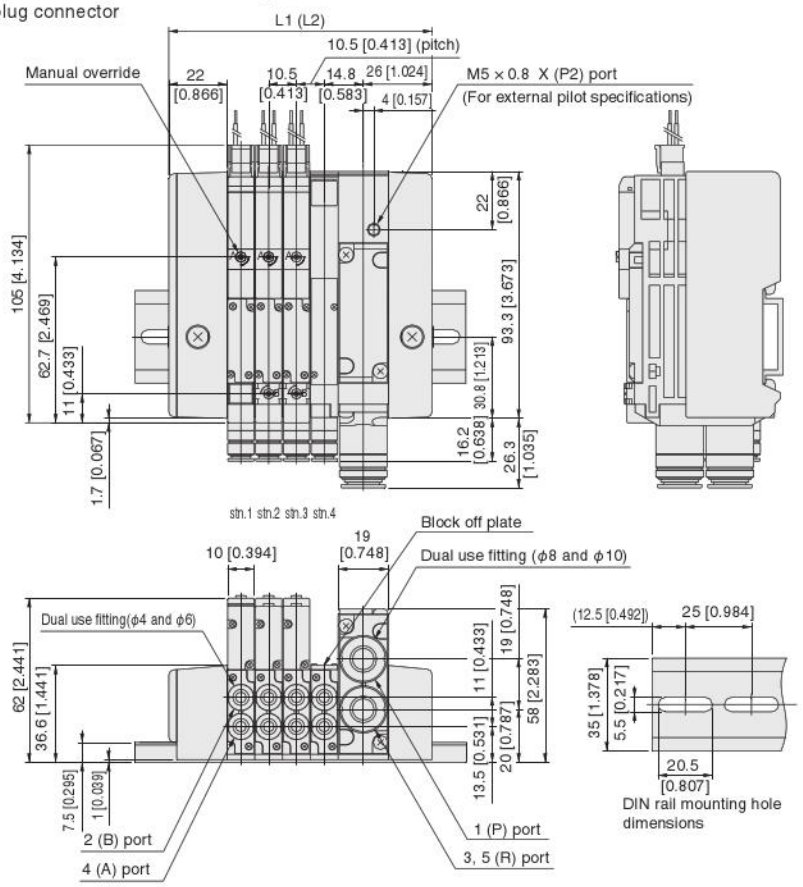


### Unit dimensions

| Number of units | L1 | Length of DIN rail | L2 Note | Length of DIN rail Note |
|---|---|---|---|---|
| 2 | 78.5 [3.091] | 125 [4.921] | 97.5 [3.839] | 125 [4.921] |
| 3 | 89.0 [3.504] | 125 [4.921] | 108.0 [4.252] | 150 [5.906] |
| 4 | 99.5 [3.917] | 125 [4.921] | 118.5 [4.665] | 150 [5.906] |
| 5 | 110.0 [4.331] | 150 [5.906] | 129.0 [5.079] | 175 [6.890] |
| 6 | 120.5 [4.744] | 150 [5.906] | 139.5 [5.492] | 175 [6.890] |
| 7 | 131.0 [5.157] | 175 [6.890] | 150.0 [5.906] | 175 [6.890] |
| 8 | 141.5 [5.571] | 175 [6.890] | 160.5 [6.319] | 200 [7.874] |
| 9 | 152.0 [5.984] | 200 [7.874] | 171.0 [6.732] | 200 [7.874] |
| 10 | 162.5 [6.398] | 200 [7.874] | 181.5 [7.146] | 225 [8.858] |
| 11 | 173.0 [6.811] | 200 [7.874] | 192.0 [7.559] | 225 [8.858] |
| 12 | 183.5 [7.224] | 225 [8.858] | 202.5 [7.972] | 250 [9.843] |
| 13 | 194.0 [7.638] | 225 [8.858] | 213.0 [8.386] | 250 [9.843] |
| 14 | 204.5 [8.051] | 250 [9.843] | 223.5 [8.799] | 250 [9.843] |
| 15 | 215.0 [8.465] | 250 [9.843] | 234.0 [9.213] | 275 [10.827] |
| 16 | 225.5 [8.878] | 275 [10.827] | 244.5 [9.626] | 275 [10.827] |
| 17 | 236.0 [9.291] | 275 [10.827] | 255.0 [10.039] | 300 [11.811] |
| 18 | 246.5 [9.705] | 275 [10.827] | 265.5 [10.453] | 300 [11.811] |
| 19 | 257.0 [10.118] | 300 [11.811] | 276.0 [10.866] | 325 [12.795] |
| 20 | 267.5 [10.531] | 300 [11.811] | 286.5 [11.280] | 325 [12.795] |

Note: When two piping blocks are used.

## F10M [Number of valves] N [Pilot specifications] (Direct piping type)

With valve outlet port dual use fitting block
S type plug connector

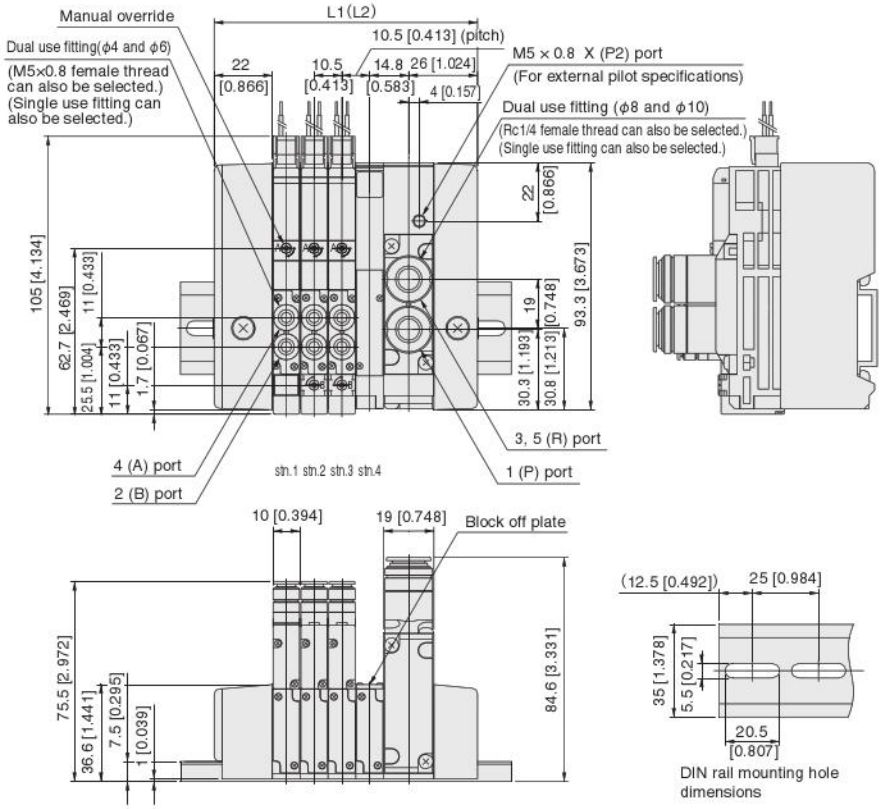


### Unit dimensions

| Number of units | L1 | Length of DIN rail | L2 Note | Length of DIN rail Note |
|---|---|---|---|---|
| 2 | 78.5 [3.091] | 125 [4.921] | 97.5 [3.839] | 125 [4.921] |
| 3 | 89.0 [3.504] | 125 [4.921] | 108.0 [4.252] | 150 [5.906] |
| 4 | 99.5 [3.917] | 125 [4.921] | 118.5 [4.665] | 150 [5.906] |
| 5 | 110.0 [4.331] | 150 [5.906] | 129.0 [5.079] | 175 [6.890] |
| 6 | 120.5 [4.744] | 150 [5.906] | 139.5 [5.492] | 175 [6.890] |
| 7 | 131.0 [5.157] | 175 [6.890] | 150.0 [5.906] | 175 [6.890] |
| 8 | 141.5 [5.571] | 175 [6.890] | 160.5 [6.319] | 200 [7.874] |
| 9 | 152.0 [5.984] | 200 [7.874] | 171.0 [6.732] | 200 [7.874] |
| 10 | 162.5 [6.398] | 200 [7.874] | 181.5 [7.146] | 225 [8.858] |
| 11 | 173.0 [6.811] | 200 [7.874] | 192.0 [7.559] | 225 [8.858] |
| 12 | 183.5 [7.224] | 225 [8.858] | 202.5 [7.972] | 250 [9.843] |
| 13 | 194.0 [7.638] | 225 [8.858] | 213.0 [8.386] | 250 [9.843] |
| 14 | 204.5 [8.051] | 250 [9.843] | 223.5 [8.799] | 250 [9.843] |
| 15 | 215.0 [8.465] | 250 [9.843] | 234.0 [9.213] | 275 [10.827] |
| 16 | 225.5 [8.878] | 275 [10.827] | 244.5 [9.626] | 275 [10.827] |
| 17 | 236.0 [9.291] | 275 [10.827] | 255.0 [10.039] | 300 [11.811] |
| 18 | 246.5 [9.705] | 275 [10.827] | 265.5 [10.453] | 300 [11.811] |
| 19 | 257.0 [10.118] | 300 [11.811] | 276.0 [10.866] | 325 [12.795] |
| 20 | 267.5 [10.531] | 300 [11.811] | 286.5 [11.280] | 325 [12.795] |

Note: When two piping blocks are used.

Note: The overall valve length of the T0 type is 8 mm [0.315 in] shorter (end cover side protrusion is 8 mm [0.315 in] less).

## F10M Number of valves NHL Pilot specifications (Base piping type)

With manifold outlet port female thread block
S type plug connector

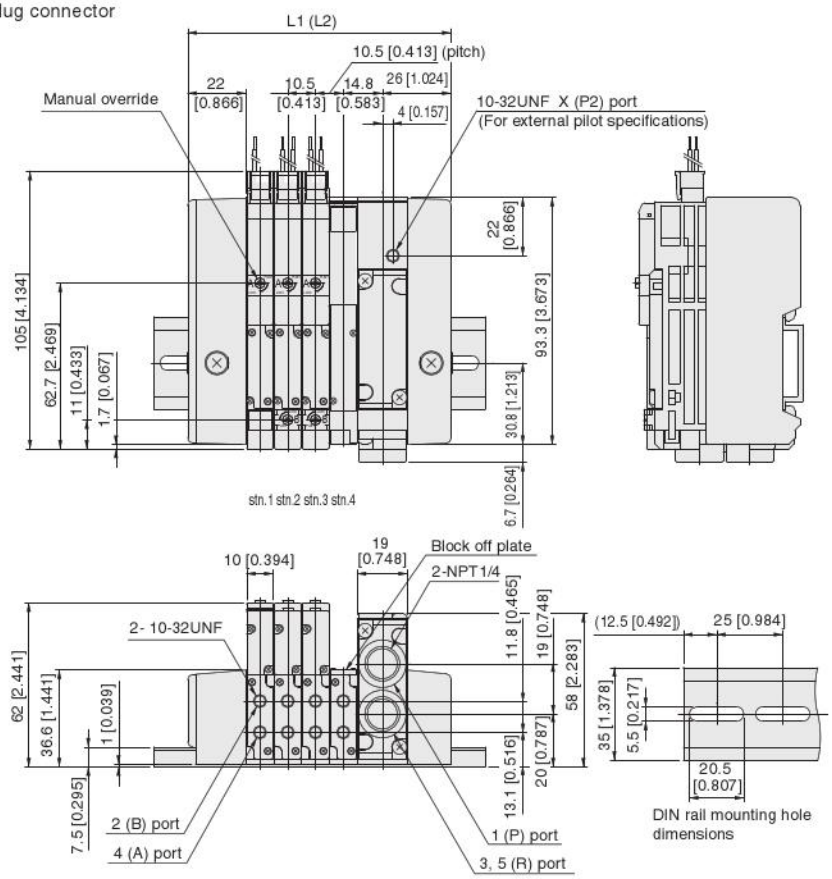


### Unit dimensions

| Number of units | L1 | Length of DIN rail | L2 Note | Length of DIN rail Note |
|---|---|---|---|---|
| 2 | 78.5 [3.091] | 125 [4.921] | 97.5 [3.839] | 125 [4.921] |
| 3 | 89.0 [3.504] | 125 [4.921] | 108.0 [4.252] | 150 [5.906] |
| 4 | 99.5 [3.917] | 125 [4.921] | 118.5 [4.665] | 150 [5.906] |
| 5 | 110.0 [4.331] | 150 [5.906] | 129.0 [5.079] | 175 [6.890] |
| 6 | 120.5 [4.744] | 150 [5.906] | 139.5 [5.492] | 175 [6.890] |
| 7 | 131.0 [5.157] | 175 [6.890] | 150.0 [5.906] | 175 [6.890] |
| 8 | 141.5 [5.571] | 175 [6.890] | 160.5 [6.319] | 200 [7.874] |
| 9 | 152.0 [5.984] | 200 [7.874] | 171.0 [6.732] | 200 [7.874] |
| 10 | 162.5 [6.398] | 200 [7.874] | 181.5 [7.146] | 225 [8.858] |
| 11 | 173.0 [6.811] | 200 [7.874] | 192.0 [7.559] | 225 [8.858] |
| 12 | 183.5 [7.224] | 225 [8.858] | 202.5 [7.972] | 250 [9.843] |
| 13 | 194.0 [7.638] | 225 [8.858] | 213.0 [8.386] | 250 [9.843] |
| 14 | 204.5 [8.051] | 250 [9.843] | 223.5 [8.799] | 250 [9.843] |
| 15 | 215.0 [8.465] | 250 [9.843] | 234.0 [9.213] | 275 [10.827] |
| 16 | 225.5 [8.878] | 275 [10.827] | 244.5 [9.626] | 275 [10.827] |
| 17 | 236.0 [9.291] | 275 [10.827] | 255.0 [10.039] | 300 [11.811] |
| 18 | 246.5 [9.705] | 275 [10.827] | 265.5 [10.453] | 300 [11.811] |
| 19 | 257.0 [10.118] | 300 [11.811] | 276.0 [10.866] | 325 [12.795] |
| 20 | 267.5 [10.531] | 300 [11.811] | 286.5 [11.280] | 325 [12.795] |

Note: When two piping blocks are used.

## F10M Number of valves NH Pilot specifications (Direct piping type)

With valve outlet port female thread block
S type plug connector

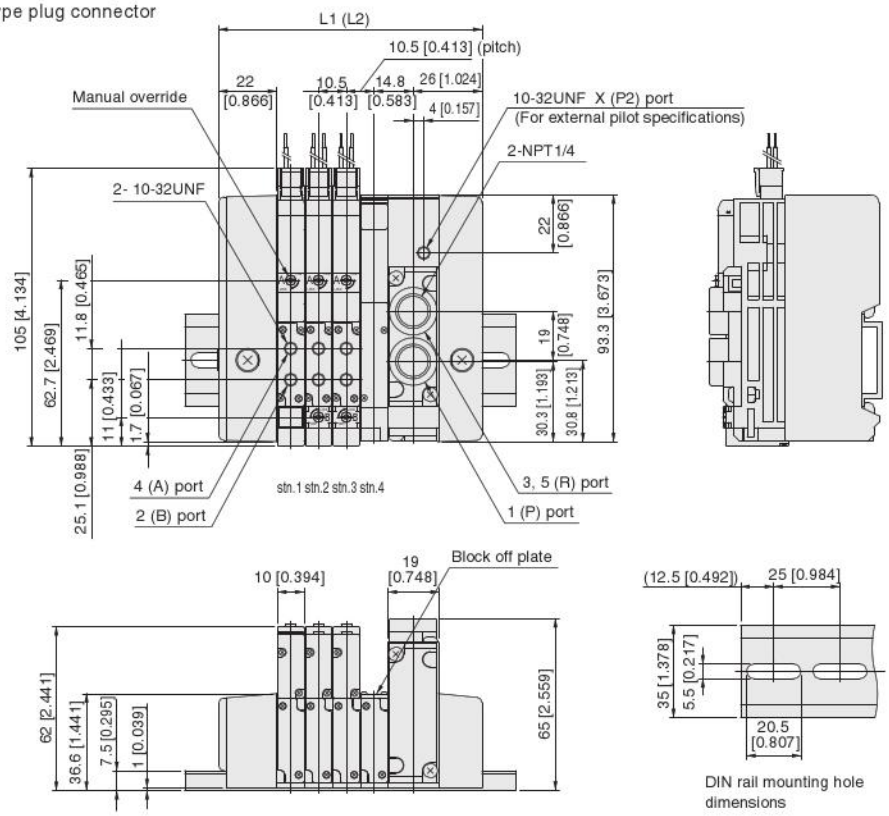


### Unit dimensions

| Number of units | L1 | Length of DIN rail | L2 Note | Length of DIN rail Note |
|---|---|---|---|---|
| 2 | 78.5 [3.091] | 125 [4.921] | 97.5 [3.839] | 125 [4.921] |
| 3 | 89.0 [3.504] | 125 [4.921] | 108.0 [4.252] | 150 [5.906] |
| 4 | 99.5 [3.917] | 125 [4.921] | 118.5 [4.665] | 150 [5.906] |
| 5 | 110.0 [4.331] | 150 [5.906] | 129.0 [5.079] | 175 [6.890] |
| 6 | 120.5 [4.744] | 150 [5.906] | 139.5 [5.492] | 175 [6.890] |
| 7 | 131.0 [5.157] | 175 [6.890] | 150.0 [5.906] | 175 [6.890] |
| 8 | 141.5 [5.571] | 175 [6.890] | 160.5 [6.319] | 200 [7.874] |
| 9 | 152.0 [5.984] | 200 [7.874] | 171.0 [6.732] | 200 [7.874] |
| 10 | 162.5 [6.398] | 200 [7.874] | 181.5 [7.146] | 225 [8.858] |
| 11 | 173.0 [6.811] | 200 [7.874] | 192.0 [7.559] | 225 [8.858] |
| 12 | 183.5 [7.224] | 225 [8.858] | 202.5 [7.972] | 250 [9.843] |
| 13 | 194.0 [7.638] | 225 [8.858] | 213.0 [8.386] | 250 [9.843] |
| 14 | 204.5 [8.051] | 250 [9.843] | 223.5 [8.799] | 250 [9.843] |
| 15 | 215.0 [8.465] | 250 [9.843] | 234.0 [9.213] | 275 [10.827] |
| 16 | 225.5 [8.878] | 275 [10.827] | 244.5 [9.626] | 275 [10.827] |
| 17 | 236.0 [9.291] | 275 [10.827] | 255.0 [10.039] | 300 [11.811] |
| 18 | 246.5 [9.705] | 275 [10.827] | 265.5 [10.453] | 300 [11.811] |
| 19 | 257.0 [10.118] | 300 [11.811] | 276.0 [10.866] | 325 [12.795] |
| 20 | 267.5 [10.531] | 300 [11.811] | 286.5 [11.280] | 325 [12.795] |

Note: When two piping blocks are used.

Note: The overall valve length of the T0 type is 8 mm [0.315 in] shorter (end cover side protrusion is 8 mm [0.315 in] less).

## F10M [Number of valves] P J/M/L [Pilot specifications] (Base piping type)

With manifold outlet port dual use fitting block
Flat cable connector 10-pin specifications

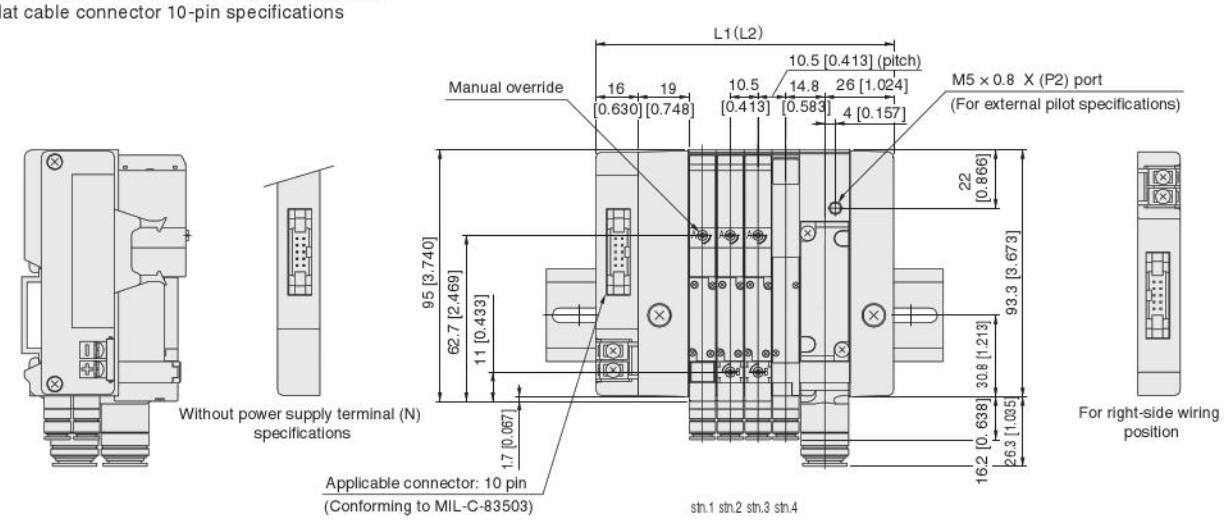


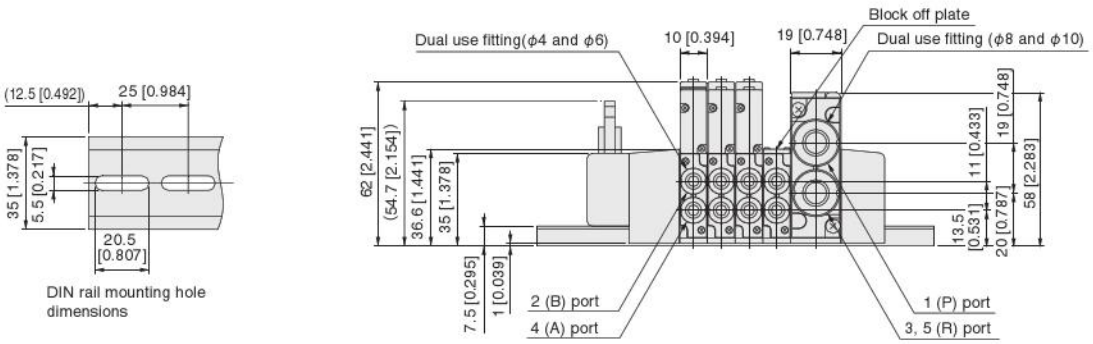


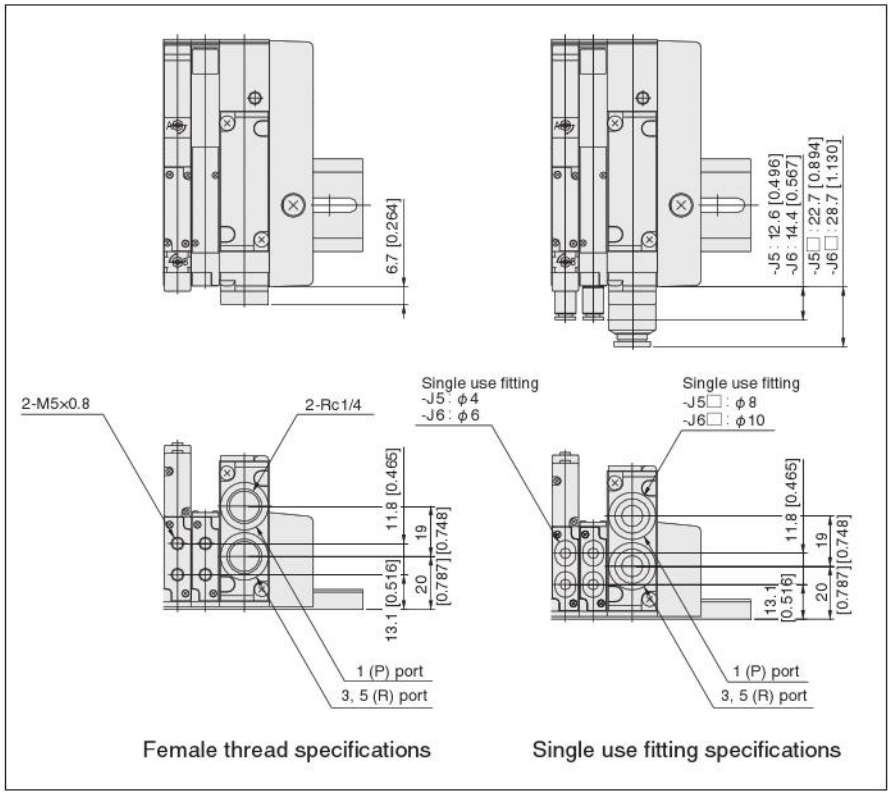


## Unit dimensions

| Number of units | L1 | Length of DIN rail | L2 Note | Length of DIN rail Note |
|---|---|---|---|---|
| 2 | 91.5 [3.602] | 125 [4.921] | 110.5 [4.350] | 150 [5.906] |
| 3 | 102.0 [4.016] | 150 [5.906] | 121.0 [4.764] | 175 [6.890] |
| 4 | 112.5 [4.429] | 150 [5.906] | 131.5 [5.177] | 175 [6.890] |
| 5 | 123.0 [4.843] | 175 [6.890] | 142.0 [5.591] | 175 [6.890] |
| 6 | 133.5 [5.256] | 175 [6.890] | 152.5 [6.004] | 200 [7.874] |
| 7 | 144.0 [5.669] | 200 [7.874] | 163.0 [6.417] | 200 [7.874] |
| 8 | 154.5 [6.083] | 200 [7.874] | 173.5 [6.831] | 225 [8.858] |

Note: When two piping blocks are used.
* For right-side mounting wiring (-R), add 5.5 mm [0.217 in] to the L1 (L2) dimension.

## F10M [Number of valves] P J/M/L [Pilot specifications] (Base piping type)

With manifold outlet port dual use fitting block
Flat cable connector 20-pin specifications (side surface wiring)

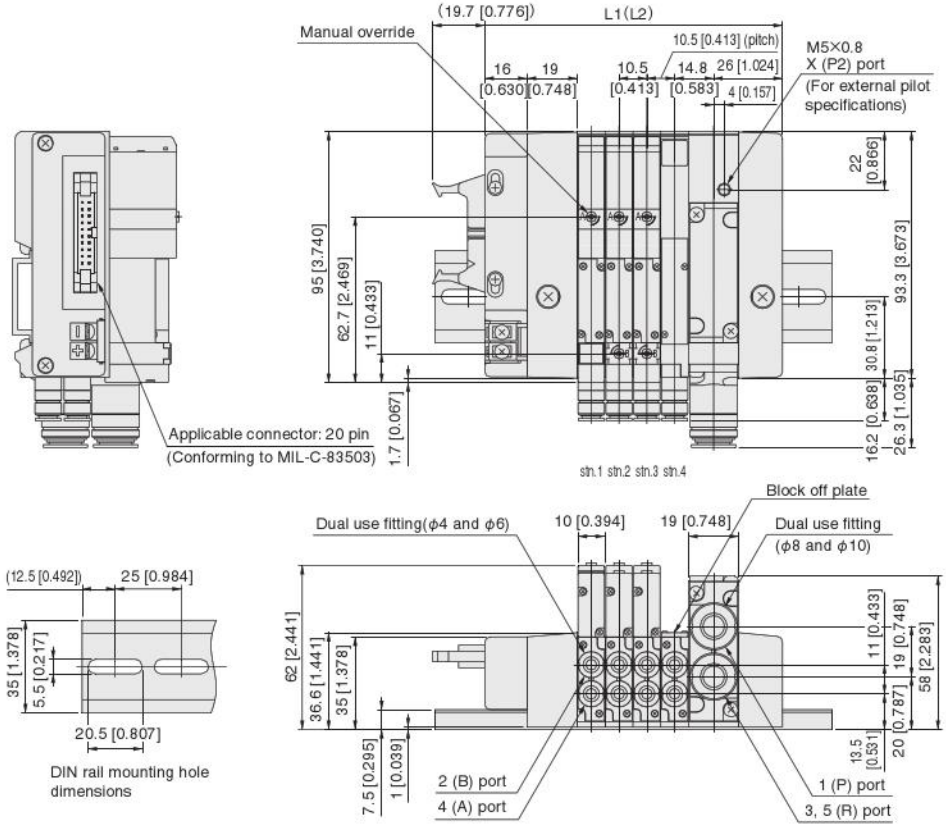


### Unit dimensions

| Number of units | L1 | Length of DIN rail | L2 Note | Length of DIN rail Note |
|---|---|---|---|---|
| 2 | 91.5 [3.602] | 125 [4.921] | 110.5 [4.350] | 150 [5.906] |
| 3 | 102.0 [4.016] | 150 [5.906] | 121.0 [4.764] | 175 [6.890] |
| 4 | 112.5 [4.429] | 150 [5.906] | 131.5 [5.177] | 175 [6.890] |
| 5 | 123.0 [4.843] | 175 [6.890] | 142.0 [5.591] | 175 [6.890] |
| 6 | 133.5 [5.256] | 175 [6.890] | 152.5 [6.004] | 200 [7.874] |
| 7 | 144.0 [5.669] | 200 [7.874] | 163.0 [6.417] | 200 [7.874] |
| 8 | 154.5 [6.083] | 200 [7.874] | 173.5 [6.831] | 225 [8.858] |
| 9 | 165.0 [6.496] | 200 [7.874] | 184.0 [7.244] | 225 [8.858] |
| 10 | 175.5 [6.909] | 225 [8.858] | 194.5 [7.657] | 250 [9.843] |
| 11 | 186.0 [7.323] | 225 [8.858] | 205.0 [8.071] | 250 [9.843] |
| 12 | 196.5 [7.736] | 250 [9.843] | 215.5 [8.484] | 250 [9.843] |
| 13 | 207.0 [8.150] | 250 [9.843] | 226.0 [8.898] | 275 [10.827] |
| 14 | 217.5 [8.563] | 275 [10.827] | 236.5 [9.311] | 275 [10.827] |
| 15 | 228.0 [8.976] | 275 [10.827] | 247.0 [9.724] | 300 [11.811] |
| 16 | 238.5 [9.390] | 275 [10.827] | 257.5 [10.138] | 300 [11.811] |

Note: When two piping blocks are used.
* For right-side mounting wiring (-R), add 5.5 mm [0.217 in] to the L1 (L2) dimension.

## F10M [Number of valves] P J/M/L [Pilot specifications] (Base piping type)

With manifold outlet port dual use fitting block
Flat cable connector 26-pin specifications

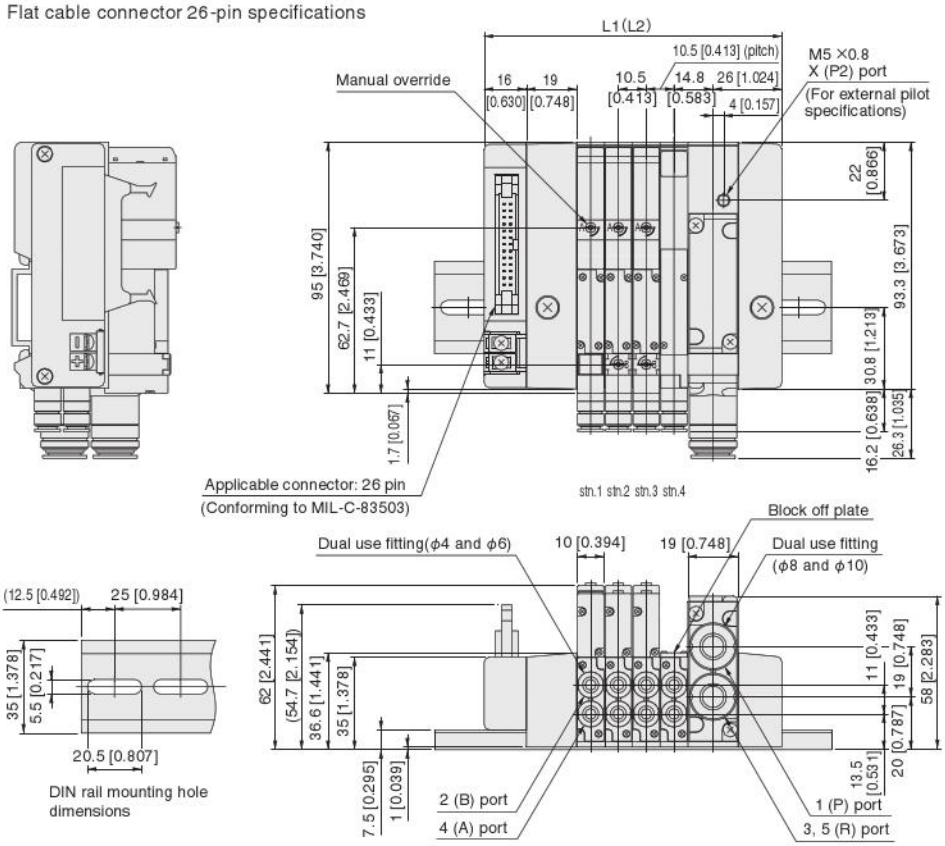


### Unit dimensions

| Number of units | L1 | Length of DIN rail | L2 Note | Length of DIN rail Note |
|---|---|---|---|---|
| 2 | 91.5 [3.602] | 125 [4.921] | 110.5 [4.350] | 150 [5.906] |
| 3 | 102.0 [4.016] | 150 [5.906] | 121.0 [4.764] | 175 [6.890] |
| 4 | 112.5 [4.429] | 150 [5.906] | 131.5 [5.177] | 175 [6.890] |
| 5 | 123.0 [4.843] | 175 [6.890] | 142.0 [5.591] | 175 [6.890] |
| 6 | 133.5 [5.256] | 175 [6.890] | 152.5 [6.004] | 200 [7.874] |
| 7 | 144.0 [5.669] | 200 [7.874] | 163.0 [6.417] | 200 [7.874] |
| 8 | 154.5 [6.083] | 200 [7.874] | 173.5 [6.831] | 225 [8.858] |
| 9 | 165.0 [6.496] | 200 [7.874] | 184.0 [7.244] | 225 [8.858] |
| 10 | 175.5 [6.909] | 225 [8.858] | 194.5 [7.657] | 250 [9.843] |
| 11 | 186.0 [7.323] | 225 [8.858] | 205.0 [8.071] | 250 [9.843] |
| 12 | 196.5 [7.736] | 250 [9.843] | 215.5 [8.484] | 250 [9.843] |
| 13 | 207.0 [8.150] | 250 [9.843] | 226.0 [8.898] | 275 [10.827] |
| 14 | 217.5 [8.563] | 275 [10.827] | 236.5 [9.311] | 275 [10.827] |
| 15 | 228.0 [8.976] | 275 [10.827] | 247.0 [9.724] | 300 [11.811] |
| 16 | 238.5 [9.390] | 275 [10.827] | 257.5 [10.138] | 300 [11.811] |
| 17 | 249.0 [9.803] | 300 [11.811] | 268.0 [10.551] | 325 [12.795] |
| 18 | 259.5 [10.217] | 300 [11.811] | 278.5 [10.965] | 325 [12.795] |
| 19 | 270.0 [10.630] | 325 [12.795] | 289.0 [11.378] | 325 [12.795] |
| 20 | 280.5 [11.043] | 325 [12.795] | 299.5 [11.791] | 350 [13.780] |

Note: When two piping blocks are used.
* For right-side mounting wiring (-R), add 5.5 mm [0.217 in] to the L1 (L2) dimension.

## F10M Number of valves P J/M/L Pilot specifications (Base piping type)

With manifold outlet port dual use fitting block
D-sub connector 25-pin specifications

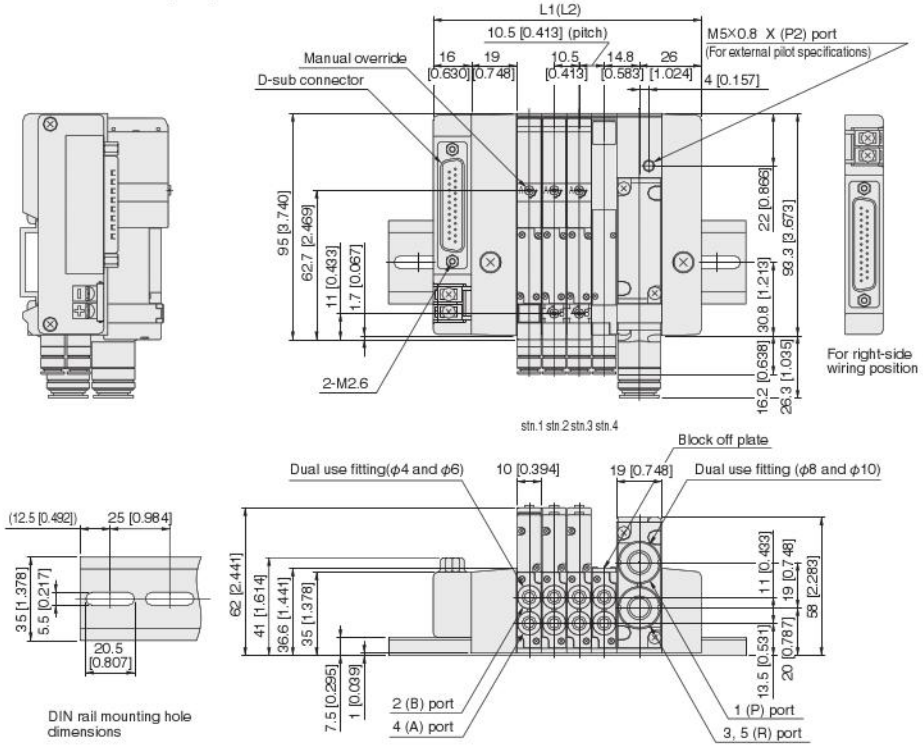


### Unit dimensions

| Number of units | L1 | Length of DIN rail | L2 Note | Length of DIN rail Note |
|---|---|---|---|---|
| 2 | 91.5 [3.602] | 125 [4.921] | 110.5 [4.350] | 150 [5.906] |
| 3 | 102.0 [4.016] | 150 [5.906] | 121.0 [4.764] | 175 [6.890] |
| 4 | 112.5 [4.429] | 150 [5.906] | 131.5 [5.177] | 175 [6.890] |
| 5 | 123.0 [4.843] | 175 [6.890] | 142.0 [5.591] | 175 [6.890] |
| 6 | 133.5 [5.256] | 175 [6.890] | 152.5 [6.004] | 200 [7.874] |
| 7 | 144.0 [5.669] | 200 [7.874] | 163.0 [6.417] | 200 [7.874] |
| 8 | 154.5 [6.083] | 200 [7.874] | 173.5 [6.831] | 225 [8.858] |
| 9 | 165.0 [6.496] | 200 [7.874] | 184.0 [7.244] | 225 [8.858] |
| 10 | 175.5 [6.909] | 225 [8.858] | 194.5 [7.657] | 250 [9.843] |
| 11 | 186.0 [7.323] | 225 [8.858] | 205.0 [8.071] | 250 [9.843] |
| 12 | 196.5 [7.736] | 250 [9.843] | 215.5 [8.484] | 250 [9.843] |
| 13 | 207.0 [8.150] | 250 [9.843] | 226.0 [8.898] | 275 [10.827] |
| 14 | 217.5 [8.563] | 275 [10.827] | 236.5 [9.311] | 275 [10.827] |
| 15 | 228.0 [8.976] | 275 [10.827] | 247.0 [9.724] | 300 [11.811] |
| 16 | 238.5 [9.390] | 275 [10.827] | 257.5 [10.138] | 300 [11.811] |
| 17 | 249.0 [9.803] | 300 [11.811] | 268.0 [10.551] | 325 [12.795] |
| 18 | 259.5 [10.217] | 300 [11.811] | 278.5 [10.965] | 325 [12.795] |
| 19 | 270.0 [10.630] | 325 [12.795] | 289.0 [11.378] | 325 [12.795] |
| 20 | 280.5 [11.043] | 325 [12.795] | 299.5 [11.791] | 350 [13.780] |

Note: When two piping blocks are used.
* For right-side mounting wiring (-R), add 5.5 mm [0.217 in] to the L1 (L2) dimension.

## F10M Number of valves P J/M/L Pilot specifications (Base piping type)

With manifold outlet port dual use fitting block
Terminal block type

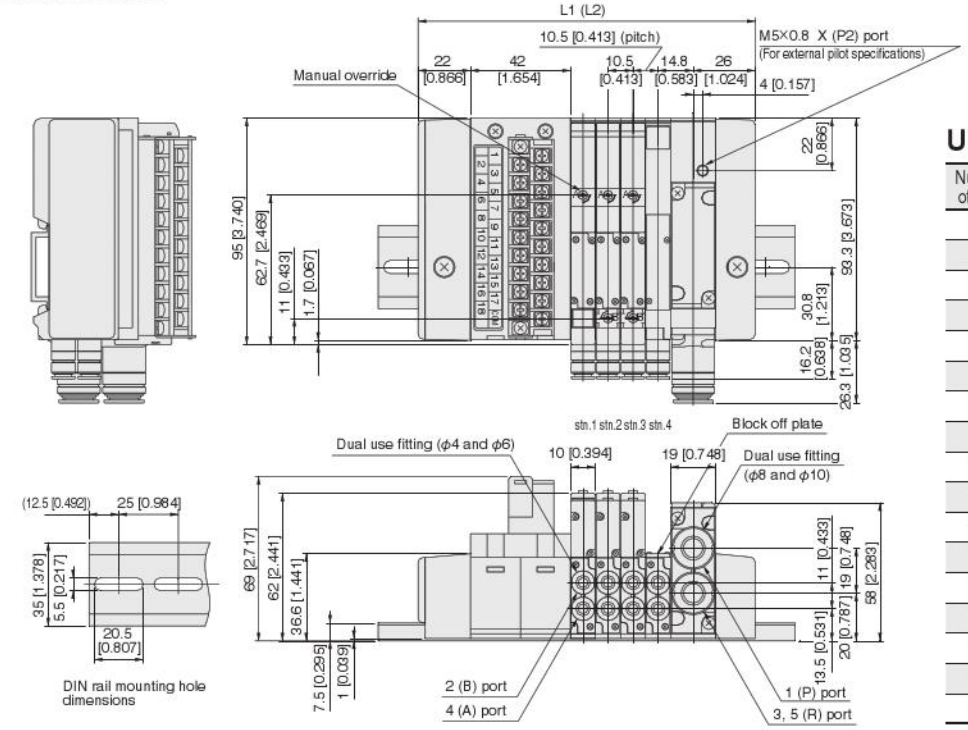


### Unit dimensions

| Number of units | L1 | Length of DIN rail | L2 Note | Length of DIN rail Note |
|---|---|---|---|---|
| 2 | 120.5 [4.744] | 150 [5.906] | 139.5 [5.492] | 175 [6.890] |
| 3 | 131.0 [5.157] | 175 [6.890] | 150.0 [5.906] | 175 [6.890] |
| 4 | 141.5 [5.571] | 175 [6.890] | 160.5 [6.319] | 200 [7.874] |
| 5 | 152.0 [5.984] | 200 [7.874] | 171.0 [6.732] | 200 [7.874] |
| 6 | 162.5 [6.398] | 200 [7.874] | 181.5 [7.146] | 225 [8.858] |
| 7 | 173.0 [6.811] | 200 [7.874] | 192.0 [7.559] | 225 [8.858] |
| 8 | 183.5 [7.224] | 225 [8.858] | 202.5 [7.972] | 250 [9.843] |
| 9 | 194.0 [7.638] | 225 [8.858] | 213.0 [8.386] | 250 [9.843] |
| 10 | 204.5 [8.051] | 250 [9.843] | 223.5 [8.799] | 250 [9.843] |
| 11 | 215.0 [8.465] | 250 [9.843] | 234.0 [9.213] | 275 [10.827] |
| 12 | 225.5 [8.878] | 275 [10.827] | 244.5 [9.626] | 275 [10.827] |
| 13 | 236.0 [9.291] | 275 [10.827] | 255.0 [10.039] | 300 [11.811] |
| 14 | 246.5 [9.705] | 275 [10.827] | 265.5 [10.453] | 300 [11.811] |
| 15 | 257.0 [10.118] | 300 [11.811] | 276.0 [10.866] | 325 [12.795] |
| 16 | 267.5 [10.531] | 300 [11.811] | 286.5 [11.280] | 325 [12.795] |
| 17 | 278.0 [10.945] | 325 [12.795] | 297.0 [11.693] | 325 [12.795] |
| 18 | 288.5 [11.358] | 325 [12.795] | 307.5 [12.106] | 350 [13.780] |

Note: When two piping blocks are used.

## F10M Number of valves PHL Pilot specifications (Base piping type)

With manifold outlet port female thread block
Flat cable connector 10-pin specifications

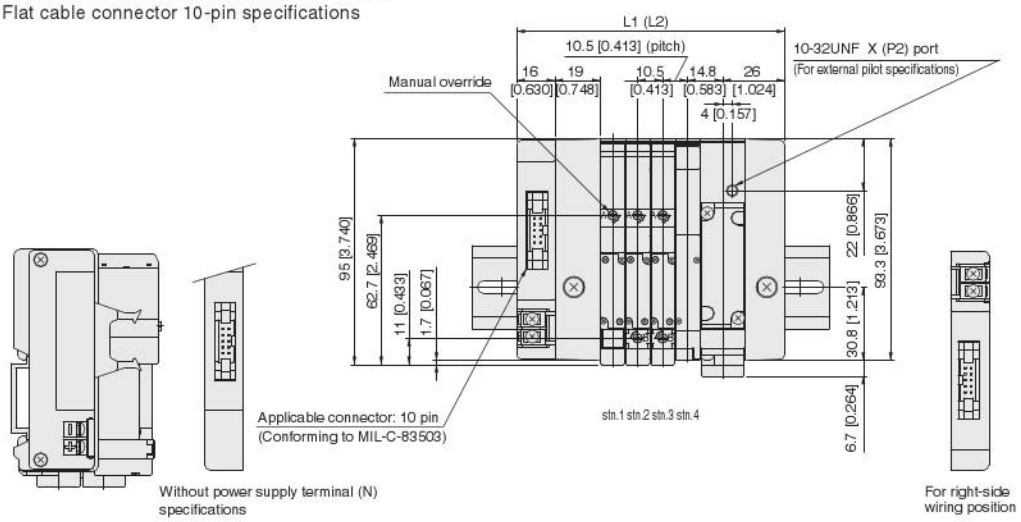


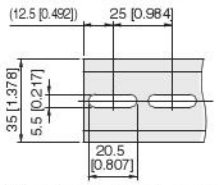


DIN rail mounting hole dimensions

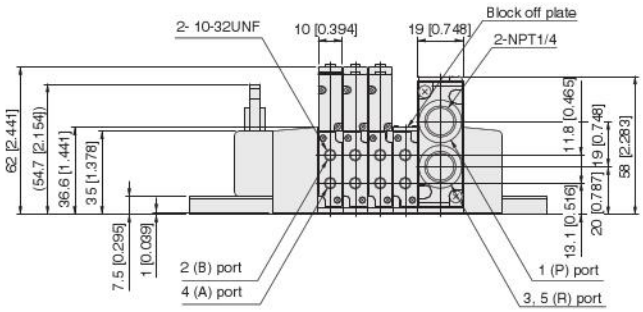


### Unit dimensions

| Number of units | L1 | Length of DIN rail | L2 Note | Length of DIN rail Note |
|---|---|---|---|---|
| 2 | 91.5 [3.602] | 125 [4.921] | 110.5 [4.350] | 150 [5.906] |
| 3 | 102.0 [4.016] | 150 [5.906] | 121.0 [4.764] | 175 [6.890] |
| 4 | 112.5 [4.429] | 150 [5.906] | 131.5 [5.177] | 175 [6.890] |
| 5 | 123.0 [4.843] | 175 [6.890] | 142.0 [5.591] | 175 [6.890] |
| 6 | 133.5 [5.256] | 175 [6.890] | 152.5 [6.004] | 200 [7.874] |
| 7 | 144.0 [5.669] | 200 [7.874] | 163.0 [6.417] | 200 [7.874] |
| 8 | 154.5 [6.083] | 200 [7.874] | 173.5 [6.831] | 225 [8.858] |

Note: When two piping blocks are used.
* For right-side mounting wiring (-R), add 5.5 mm [0.217 in] to the L1 (L2) dimension.

## F10M Number of valves Pilot specifications (Direct piping type)

With valve outlet port female thread block
Flat cable connector 10-pin specifications

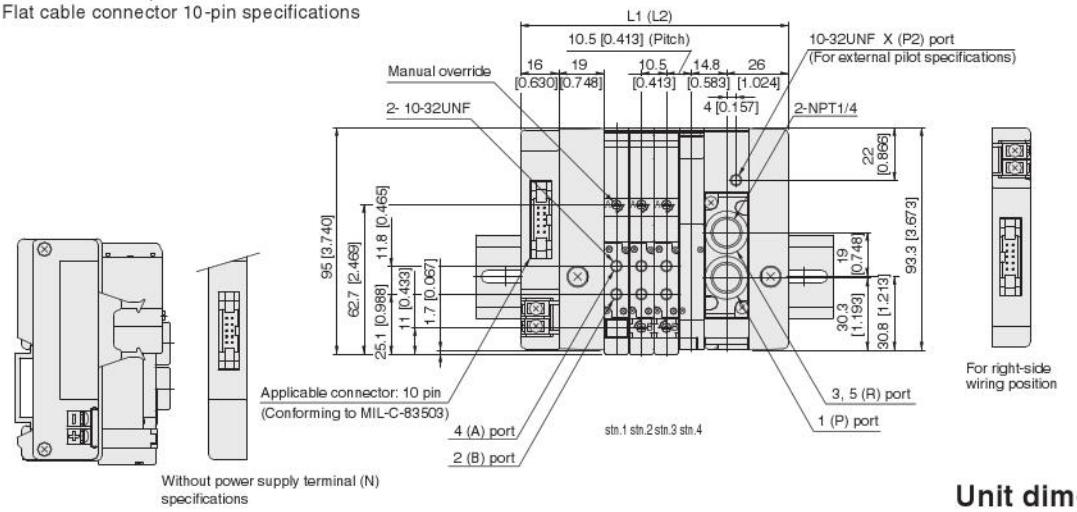


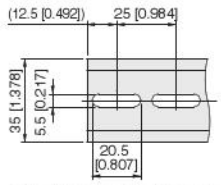


DIN rail mounting hole dimensions

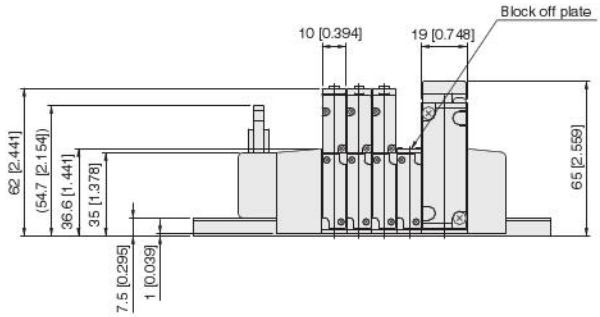


### Unit dimensions

| Number of units | L1 | Length of DIN rail | L2 Note | Length of DIN rail Note |
|---|---|---|---|---|
| 2 | 91.5 [3.602] | 125 [4.921] | 110.5 [4.350] | 150 [5.906] |
| 3 | 102.0 [4.016] | 150 [5.906] | 121.0 [4.764] | 175 [6.890] |
| 4 | 112.5 [4.429] | 150 [5.906] | 131.5 [5.177] | 175 [6.890] |
| 5 | 123.0 [4.843] | 175 [6.890] | 142.0 [5.591] | 175 [6.890] |
| 6 | 133.5 [5.256] | 175 [6.890] | 152.5 [6.004] | 200 [7.874] |
| 7 | 144.0 [5.669] | 200 [7.874] | 163.0 [6.417] | 200 [7.874] |
| 8 | 154.5 [6.083] | 200 [7.874] | 173.5 [6.831] | 225 [8.858] |

Note: When two piping blocks are used.
* For right-side mounting wiring (-R), add 5.5 mm [0.217 in] to the L1 (L2) dimension.

## F10M Number of valves PHL Pilot specifications (Base piping type)

With manifold outlet port female thread block
Flat cable connector 20-pin specifications (side surface wiring)

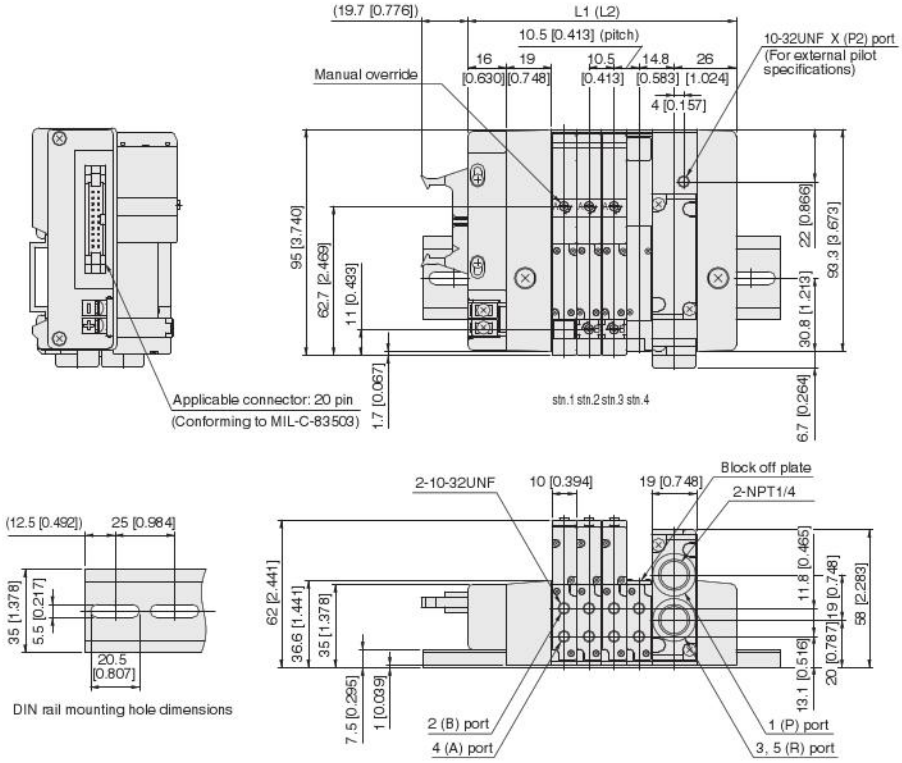


### Unit dimensions

| Number of units | L1 | Length of DIN rail | L2 Note | Length of DIN rail Note |
|---|---|---|---|---|
| 2 | 91.5 [3.602] | 125 [4.921] | 110.5 [4.350] | 150 [5.906] |
| 3 | 102.0 [4.016] | 150 [5.906] | 121.0 [4.764] | 175 [6.890] |
| 4 | 112.5 [4.429] | 150 [5.906] | 131.5 [5.177] | 175 [6.890] |
| 5 | 123.0 [4.843] | 175 [6.890] | 142.0 [5.591] | 175 [6.890] |
| 6 | 133.5 [5.256] | 175 [6.890] | 152.5 [6.004] | 200 [7.874] |
| 7 | 144.0 [5.669] | 200 [7.874] | 163.0 [6.417] | 200 [7.874] |
| 8 | 154.5 [6.083] | 200 [7.874] | 173.5 [6.831] | 225 [8.858] |
| 9 | 165.0 [6.496] | 200 [7.874] | 184.0 [7.244] | 225 [8.858] |
| 10 | 175.5 [6.909] | 225 [8.858] | 194.5 [7.657] | 250 [9.843] |
| 11 | 186.0 [7.323] | 225 [8.858] | 205.0 [8.071] | 250 [9.843] |
| 12 | 196.5 [7.736] | 250 [9.843] | 215.5 [8.484] | 250 [9.843] |
| 13 | 207.0 [8.150] | 250 [9.843] | 226.0 [8.898] | 275 [10.827] |
| 14 | 217.5 [8.563] | 275 [10.827] | 236.5 [9.311] | 275 [10.827] |
| 15 | 228.0 [8.976] | 275 [10.827] | 247.0 [9.724] | 300 [11.811] |
| 16 | 238.5 [9.390] | 275 [10.827] | 257.5 [10.138] | 300 [11.811] |

Note: When two piping blocks are used.
* For right-side mounting wiring (-R), add 5.5 mm [0.217 in] to the L1 (L2) dimension.

## F10M Number of valves PH Pilot specifications (Direct piping type)

With valve outlet port female thread block
Flat cable connector 20-pin specifications

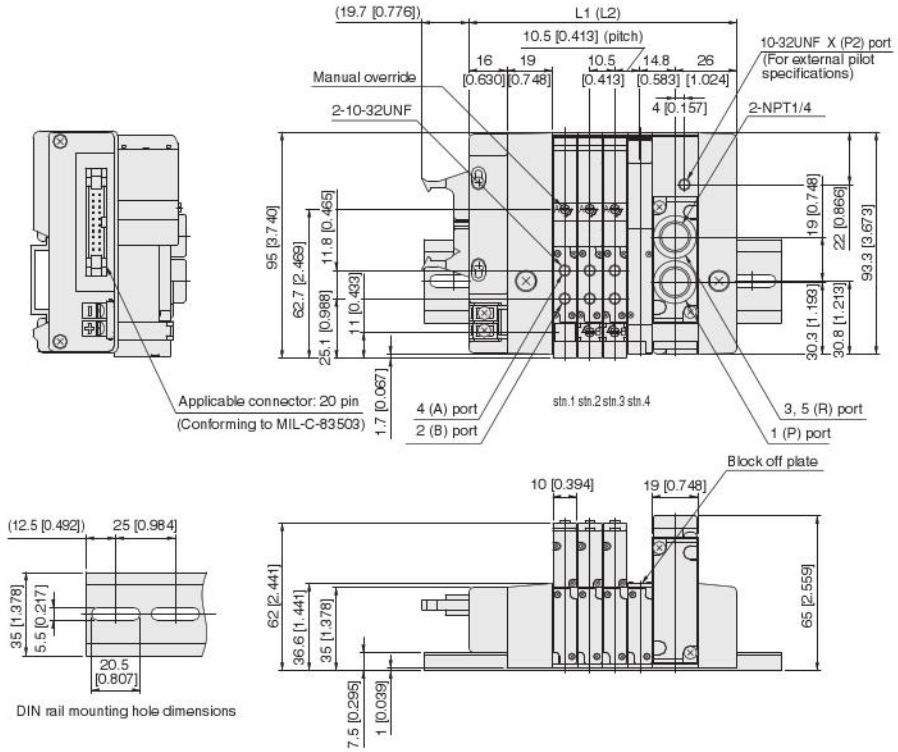


### Unit dimensions

| Number of units | L1 | Length of DIN rail | L2 Note | Length of DIN rail Note |
|---|---|---|---|---|
| 2 | 91.5 [3.602] | 125 [4.921] | 110.5 [4.350] | 150 [5.906] |
| 3 | 102.0 [4.016] | 150 [5.906] | 121.0 [4.764] | 175 [6.890] |
| 4 | 112.5 [4.429] | 150 [5.906] | 131.5 [5.177] | 175 [6.890] |
| 5 | 123.0 [4.843] | 175 [6.890] | 142.0 [5.591] | 175 [6.890] |
| 6 | 133.5 [5.256] | 175 [6.890] | 152.5 [6.004] | 200 [7.874] |
| 7 | 144.0 [5.669] | 200 [7.874] | 163.0 [6.417] | 200 [7.874] |
| 8 | 154.5 [6.083] | 200 [7.874] | 173.5 [6.831] | 225 [8.858] |
| 9 | 165.0 [6.496] | 200 [7.874] | 184.0 [7.244] | 225 [8.858] |
| 10 | 175.5 [6.909] | 225 [8.858] | 194.5 [7.657] | 250 [9.843] |
| 11 | 186.0 [7.323] | 225 [8.858] | 205.0 [8.071] | 250 [9.843] |
| 12 | 196.5 [7.736] | 250 [9.843] | 215.5 [8.484] | 250 [9.843] |
| 13 | 207.0 [8.150] | 250 [9.843] | 226.0 [8.898] | 275 [10.827] |
| 14 | 217.5 [8.563] | 275 [10.827] | 236.5 [9.311] | 275 [10.827] |
| 15 | 228.0 [8.976] | 275 [10.827] | 247.0 [9.724] | 300 [11.811] |
| 16 | 238.5 [9.390] | 275 [10.827] | 257.5 [10.138] | 300 [11.811] |

Note: When two piping blocks are used.
* For right-side mounting wiring (-R), add 5.5 mm [0.217 in] to the L1 (L2) dimension.

## F10M Number of valves PHL Pilot specifications (Base piping type)

With manifold outlet port female thread block
Flat cable connector 26-pin specifications

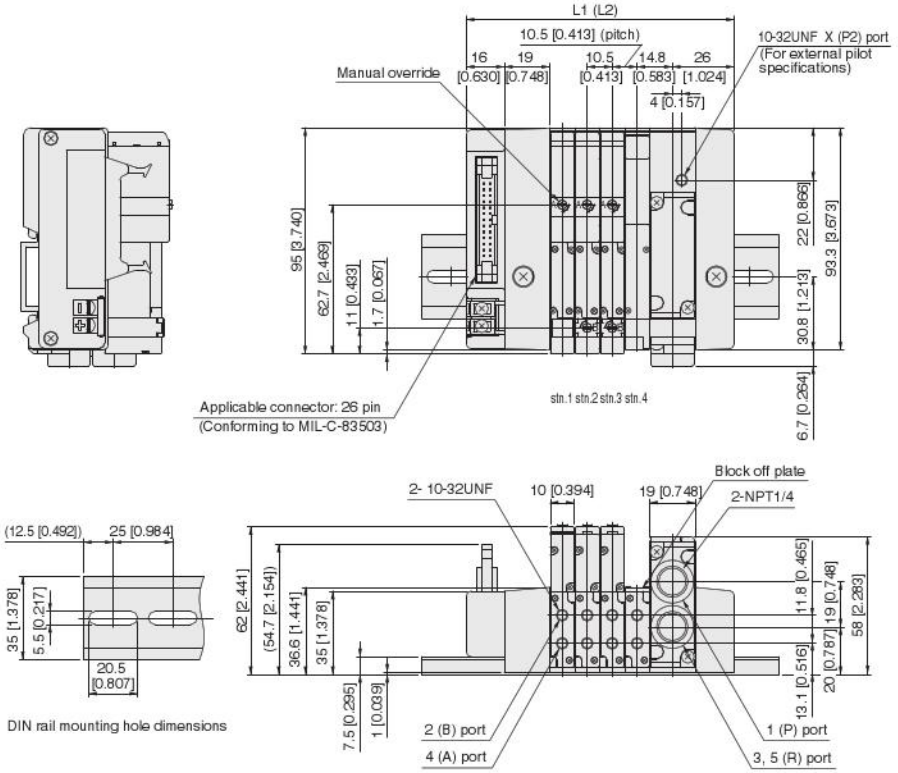


### Unit dimensions

| Number of units | L1 | Length of DIN rail | L2 Note | Length of DIN rail Note |
|---|---|---|---|---|
| 2 | 91.5 [3.602] | 125 [4.921] | 110.5 [4.350] | 150 [5.906] |
| 3 | 102.0 [4.016] | 150 [5.906] | 121.0 [4.764] | 175 [6.890] |
| 4 | 112.5 [4.429] | 150 [5.906] | 131.5 [5.177] | 175 [6.890] |
| 5 | 123.0 [4.843] | 175 [6.890] | 142.0 [5.591] | 175 [6.890] |
| 6 | 133.5 [5.256] | 175 [6.890] | 152.5 [6.004] | 200 [7.874] |
| 7 | 144.0 [5.669] | 200 [7.874] | 163.0 [6.417] | 200 [7.874] |
| 8 | 154.5 [6.083] | 200 [7.874] | 173.5 [6.831] | 225 [8.858] |
| 9 | 165.0 [6.496] | 200 [7.874] | 184.0 [7.244] | 225 [8.858] |
| 10 | 175.5 [6.909] | 225 [8.858] | 194.5 [7.657] | 250 [9.843] |
| 11 | 186.0 [7.323] | 225 [8.858] | 205.0 [8.071] | 250 [9.843] |
| 12 | 196.5 [7.736] | 250 [9.843] | 215.5 [8.484] | 250 [9.843] |
| 13 | 207.0 [8.150] | 250 [9.843] | 226.0 [8.898] | 275 [10.827] |
| 14 | 217.5 [8.563] | 275 [10.827] | 236.5 [9.311] | 275 [10.827] |
| 15 | 228.0 [8.976] | 275 [10.827] | 247.0 [9.724] | 300 [11.811] |
| 16 | 238.5 [9.390] | 275 [10.827] | 257.5 [10.138] | 300 [11.811] |
| 17 | 249.0 [9.803] | 300 [11.811] | 268.0 [10.551] | 325 [12.795] |
| 18 | 259.5 [10.217] | 300 [11.811] | 278.5 [10.965] | 325 [12.795] |
| 19 | 270.0 [10.630] | 325 [12.795] | 289.0 [11.378] | 325 [12.795] |
| 20 | 280.5 [11.043] | 325 [12.795] | 299.5 [11.791] | 350 [13.780] |

Note: When two piping blocks are used.
* For right-side mounting wiring (-R), add 5.5 mm [0.217 in] to the L1 (L2) dimension.

## F10M Number of valves PH Pilot specifications (Direct piping type)

With valve outlet port female thread block
Flat cable connector 26-pin specifications

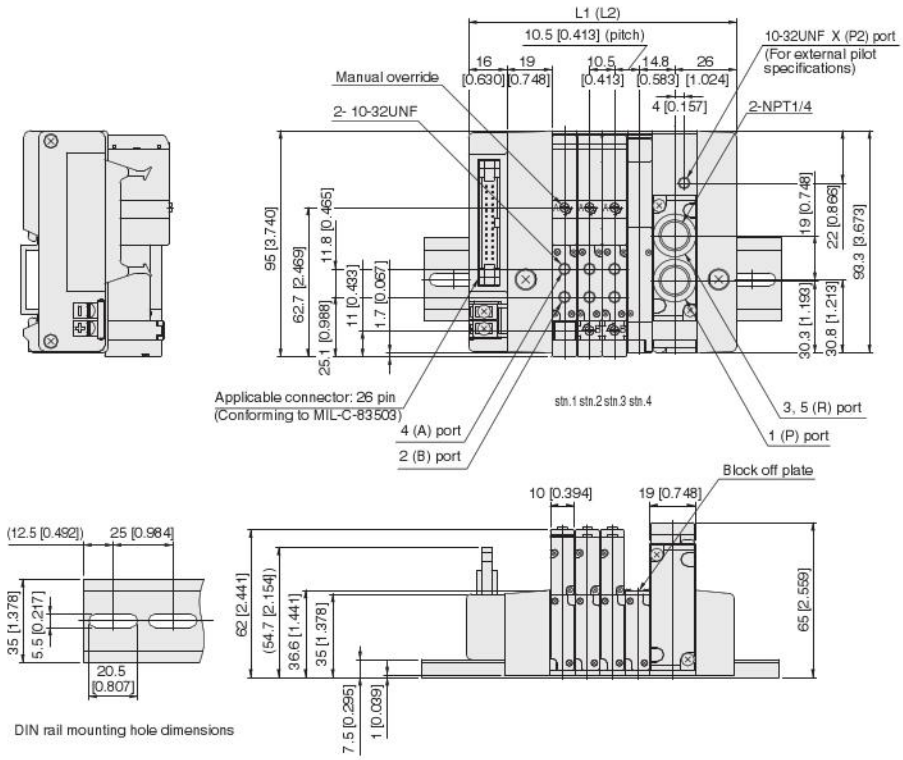


### Unit dimensions

| Number of units | L1 | Length of DIN rail | L2 Note | Length of DIN rail Note |
|---|---|---|---|---|
| 2 | 91.5 [3.602] | 125 [4.921] | 110.5 [4.350] | 150 [5.906] |
| 3 | 102.0 [4.016] | 150 [5.906] | 121.0 [4.764] | 175 [6.890] |
| 4 | 112.5 [4.429] | 150 [5.906] | 131.5 [5.177] | 175 [6.890] |
| 5 | 123.0 [4.843] | 175 [6.890] | 142.0 [5.591] | 175 [6.890] |
| 6 | 133.5 [5.256] | 175 [6.890] | 152.5 [6.004] | 200 [7.874] |
| 7 | 144.0 [5.669] | 200 [7.874] | 163.0 [6.417] | 200 [7.874] |
| 8 | 154.5 [6.083] | 200 [7.874] | 173.5 [6.831] | 225 [8.858] |
| 9 | 165.0 [6.496] | 200 [7.874] | 184.0 [7.244] | 225 [8.858] |
| 10 | 175.5 [6.909] | 225 [8.858] | 194.5 [7.657] | 250 [9.843] |
| 11 | 186.0 [7.323] | 225 [8.858] | 205.0 [8.071] | 250 [9.843] |
| 12 | 196.5 [7.736] | 250 [9.843] | 215.5 [8.484] | 250 [9.843] |
| 13 | 207.0 [8.150] | 250 [9.843] | 226.0 [8.898] | 275 [10.827] |
| 14 | 217.5 [8.563] | 275 [10.827] | 236.5 [9.311] | 275 [10.827] |
| 15 | 228.0 [8.976] | 275 [10.827] | 247.0 [9.724] | 300 [11.811] |
| 16 | 238.5 [9.390] | 275 [10.827] | 257.5 [10.138] | 300 [11.811] |
| 17 | 249.0 [9.803] | 300 [11.811] | 268.0 [10.551] | 325 [12.795] |
| 18 | 259.5 [10.217] | 300 [11.811] | 278.5 [10.965] | 325 [12.795] |
| 19 | 270.0 [10.630] | 325 [12.795] | 289.0 [11.378] | 325 [12.795] |
| 20 | 280.5 [11.043] | 325 [12.795] | 299.5 [11.791] | 350 [13.780] |

Note: When two piping blocks are used.
* For right-side mounting wiring (-R), add 5.5 mm [0.217 in] to the L1 (L2) dimension.

## F10M Number of valves PHL Pilot specifications (Base piping type)

With manifold outlet port female thread block
D-sub connector 25-pin specifications

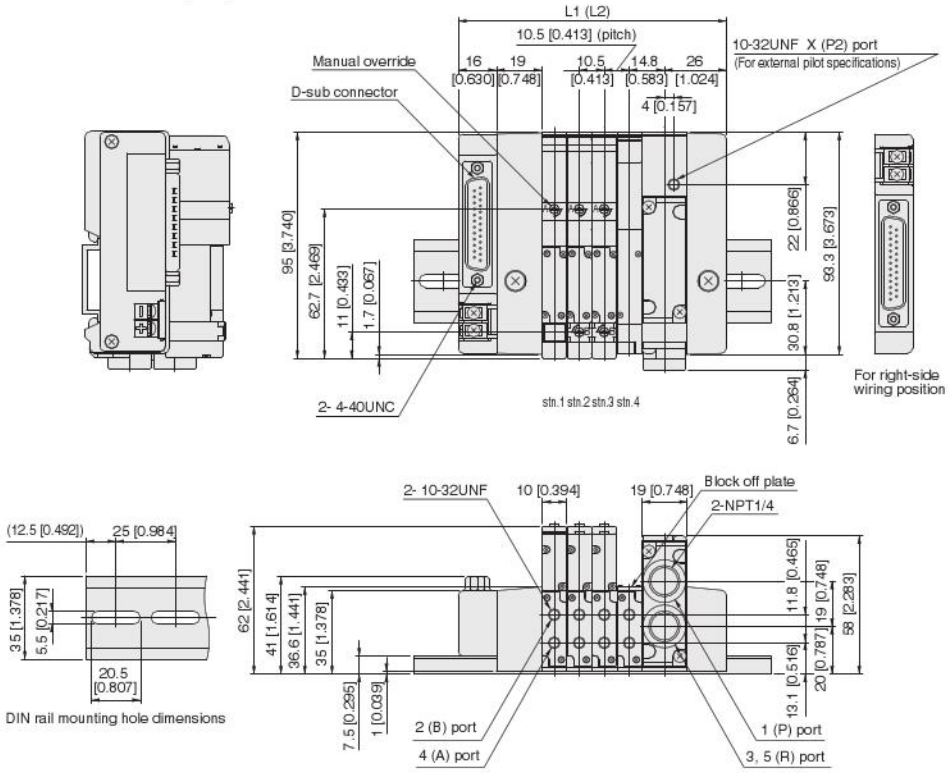


### Unit dimensions

| Number of units | L1 | Length of DIN rail | L2 Note | Length of DIN rail Note |
|---|---|---|---|---|
| 2 | 91.5 [3.602] | 125 [4.921] | 110.5 [4.350] | 150 [5.906] |
| 3 | 102.0 [4.016] | 150 [5.906] | 121.0 [4.764] | 175 [6.890] |
| 4 | 112.5 [4.429] | 150 [5.906] | 131.5 [5.177] | 175 [6.890] |
| 5 | 123.0 [4.843] | 175 [6.890] | 142.0 [5.591] | 175 [6.890] |
| 6 | 133.5 [5.256] | 175 [6.890] | 152.5 [6.004] | 200 [7.874] |
| 7 | 144.0 [5.669] | 200 [7.874] | 163.0 [6.417] | 200 [7.874] |
| 8 | 154.5 [6.083] | 200 [7.874] | 173.5 [6.831] | 225 [8.858] |
| 9 | 165.0 [6.496] | 200 [7.874] | 184.0 [7.244] | 225 [8.858] |
| 10 | 175.5 [6.909] | 225 [8.858] | 194.5 [7.657] | 250 [9.843] |
| 11 | 186.0 [7.323] | 225 [8.858] | 205.0 [8.071] | 250 [9.843] |
| 12 | 196.5 [7.736] | 250 [9.843] | 215.5 [8.484] | 250 [9.843] |
| 13 | 207.0 [8.150] | 250 [9.843] | 226.0 [8.898] | 275 [10.827] |
| 14 | 217.5 [8.563] | 275 [10.827] | 236.5 [9.311] | 275 [10.827] |
| 15 | 228.0 [8.976] | 275 [10.827] | 247.0 [9.724] | 300 [11.811] |
| 16 | 238.5 [9.390] | 275 [10.827] | 257.5 [10.138] | 300 [11.811] |
| 17 | 249.0 [9.803] | 300 [11.811] | 268.0 [10.551] | 325 [12.795] |
| 18 | 259.5 [10.217] | 300 [11.811] | 278.5 [10.965] | 325 [12.795] |
| 19 | 270.0 [10.630] | 325 [12.795] | 289.0 [11.378] | 325 [12.795] |
| 20 | 280.5 [11.043] | 325 [12.795] | 299.5 [11.791] | 350 [13.780] |

Note: When two piping blocks are used.
* For right-side mounting wiring (-R), add 5.5 mm [0.217 in] to the L1 (L2) dimension.

## F10M Number of valves PH Pilot specifications (Direct piping type)

With valve outlet port female thread block
D-sub connector 25-pin specifications

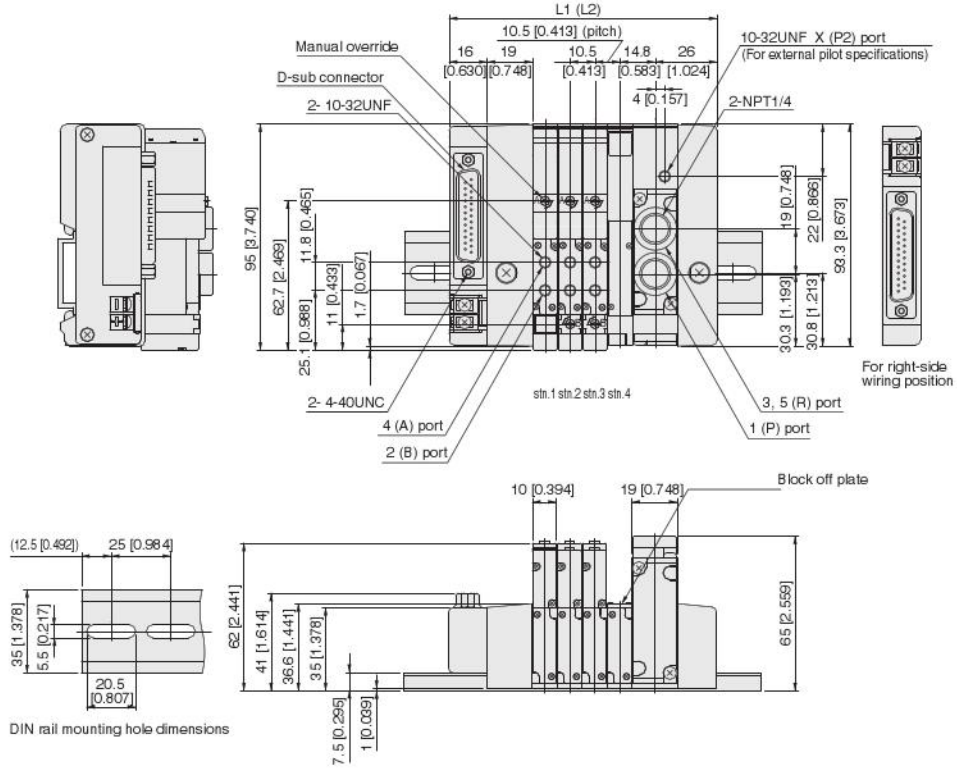


### Unit dimensions

| Number of units | L1 | Length of DIN rail | L2 Note | Length of DIN rail Note |
|---|---|---|---|---|
| 2 | 91.5 [3.602] | 125 [4.921] | 110.5 [4.350] | 150 [5.906] |
| 3 | 102.0 [4.016] | 150 [5.906] | 121.0 [4.764] | 175 [6.890] |
| 4 | 112.5 [4.429] | 150 [5.906] | 131.5 [5.177] | 175 [6.890] |
| 5 | 123.0 [4.843] | 175 [6.890] | 142.0 [5.591] | 175 [6.890] |
| 6 | 133.5 [5.256] | 175 [6.890] | 152.5 [6.004] | 200 [7.874] |
| 7 | 144.0 [5.669] | 200 [7.874] | 163.0 [6.417] | 200 [7.874] |
| 8 | 154.5 [6.083] | 200 [7.874] | 173.5 [6.831] | 225 [8.858] |
| 9 | 165.0 [6.496] | 200 [7.874] | 184.0 [7.244] | 225 [8.858] |
| 10 | 175.5 [6.909] | 225 [8.858] | 194.5 [7.657] | 250 [9.843] |
| 11 | 186.0 [7.323] | 225 [8.858] | 205.0 [8.071] | 250 [9.843] |
| 12 | 196.5 [7.736] | 250 [9.843] | 215.5 [8.484] | 250 [9.843] |
| 13 | 207.0 [8.150] | 250 [9.843] | 226.0 [8.898] | 275 [10.827] |
| 14 | 217.5 [8.563] | 275 [10.827] | 236.5 [9.311] | 275 [10.827] |
| 15 | 228.0 [8.976] | 275 [10.827] | 247.0 [9.724] | 300 [11.811] |
| 16 | 238.5 [9.390] | 275 [10.827] | 257.5 [10.138] | 300 [11.811] |
| 17 | 249.0 [9.803] | 300 [11.811] | 268.0 [10.551] | 325 [12.795] |
| 18 | 259.5 [10.217] | 300 [11.811] | 278.5 [10.965] | 325 [12.795] |
| 19 | 270.0 [10.630] | 325 [12.795] | 289.0 [11.378] | 325 [12.795] |
| 20 | 280.5 [11.043] | 325 [12.795] | 299.5 [11.791] | 350 [13.780] |

Note: When two piping blocks are used.
* For right-side mounting wiring (-R), add 5.5 mm [0.217 in] to the L1 (L2) dimension.

## F10M Number of valves PHL Pilot specifications (Base piping type)

With manifold outlet port female thread block
D-sub connector 37-pin specifications

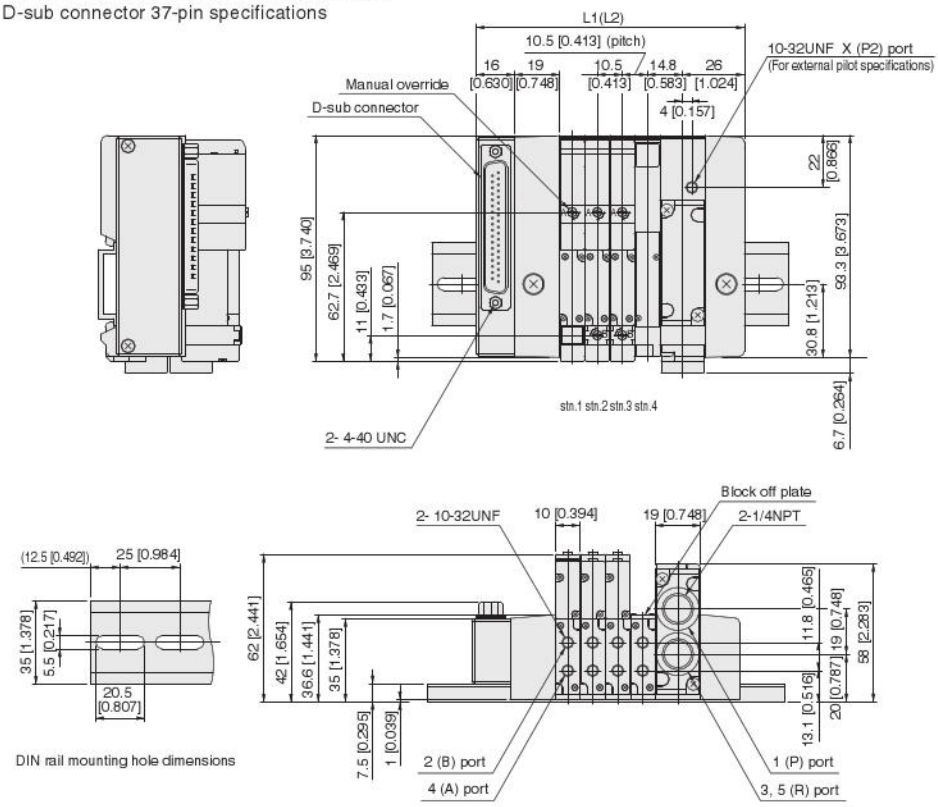


### Unit dimensions

| Number of units | L1 | Length of DIN rail | L2 Note | Length of DIN rail Note |
|---|---|---|---|---|
| 2 | 91.5 [3.602] | 125 [4.921] | 110.5 [4.350] | 150 [5.906] |
| 3 | 102.0 [4.016] | 150 [5.906] | 121.0 [4.764] | 175 [6.890] |
| 4 | 112.5 [4.429] | 150 [5.906] | 131.5 [5.177] | 175 [6.890] |
| 5 | 123.0 [4.843] | 175 [6.890] | 142.0 [5.591] | 175 [6.890] |
| 6 | 133.5 [5.256] | 175 [6.890] | 152.5 [6.004] | 200 [7.874] |
| 7 | 144.0 [5.669] | 200 [7.874] | 163.0 [6.417] | 200 [7.874] |
| 8 | 154.5 [6.083] | 200 [7.874] | 173.5 [6.831] | 225 [8.858] |
| 9 | 165.0 [6.496] | 200 [7.874] | 184.0 [7.244] | 225 [8.858] |
| 10 | 175.5 [6.909] | 225 [8.858] | 194.5 [7.657] | 250 [9.843] |
| 11 | 186.0 [7.323] | 225 [8.858] | 205.0 [8.071] | 250 [9.843] |
| 12 | 196.5 [7.736] | 250 [9.843] | 215.5 [8.484] | 250 [9.843] |
| 13 | 207.0 [8.150] | 250 [9.843] | 226.0 [8.898] | 275 [10.827] |
| 14 | 217.5 [8.563] | 275 [10.827] | 236.5 [9.311] | 275 [10.827] |
| 15 | 228.0 [8.976] | 275 [10.827] | 247.0 [9.724] | 300 [11.811] |
| 16 | 238.5 [9.390] | 275 [10.827] | 257.5 [10.138] | 300 [11.811] |
| 17 | 249.0 [9.803] | 300 [11.811] | 268.0 [10.551] | 325 [12.795] |
| 18 | 259.5 [10.217] | 300 [11.811] | 278.5 [10.965] | 325 [12.795] |
| 19 | 270.0 [10.630] | 325 [12.795] | 289.0 [11.378] | 325 [12.795] |
| 20 | 280.5 [11.043] | 325 [12.795] | 299.5 [11.791] | 350 [13.780] |

Note: When two piping blocks are used.
* For right-side mounting wiring (-R), add 5.5 mm [0.217 in] to the L1 (L2) dimension.

## F10M Number of valves PH Pilot specifications (Direct piping type)

With valve outlet port female thread block
D-sub connector 37-pin specifications

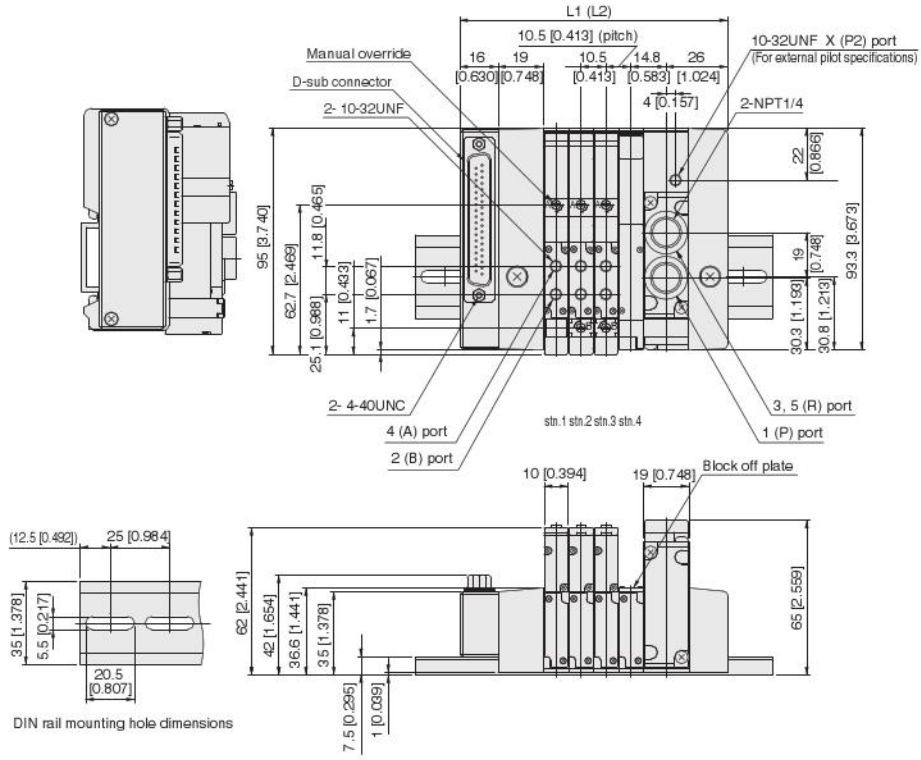


### Unit dimensions

| Number of units | L1 | Length of DIN rail | L2 Note | Length of DIN rail Note |
|---|---|---|---|---|
| 2 | 91.5 [3.602] | 125 [4.921] | 110.5 [4.350] | 150 [5.906] |
| 3 | 102.0 [4.016] | 150 [5.906] | 121.0 [4.764] | 175 [6.890] |
| 4 | 112.5 [4.429] | 150 [5.906] | 131.5 [5.177] | 175 [6.890] |
| 5 | 123.0 [4.843] | 175 [6.890] | 142.0 [5.591] | 175 [6.890] |
| 6 | 133.5 [5.256] | 175 [6.890] | 152.5 [6.004] | 200 [7.874] |
| 7 | 144.0 [5.669] | 200 [7.874] | 163.0 [6.417] | 200 [7.874] |
| 8 | 154.5 [6.083] | 200 [7.874] | 173.5 [6.831] | 225 [8.858] |
| 9 | 165.0 [6.496] | 200 [7.874] | 184.0 [7.244] | 225 [8.858] |
| 10 | 175.5 [6.909] | 225 [8.858] | 194.5 [7.657] | 250 [9.843] |
| 11 | 186.0 [7.323] | 225 [8.858] | 205.0 [8.071] | 250 [9.843] |
| 12 | 196.5 [7.736] | 250 [9.843] | 215.5 [8.484] | 250 [9.843] |
| 13 | 207.0 [8.150] | 250 [9.843] | 226.0 [8.898] | 275 [10.827] |
| 14 | 217.5 [8.563] | 275 [10.827] | 236.5 [9.311] | 275 [10.827] |
| 15 | 228.0 [8.976] | 275 [10.827] | 247.0 [9.724] | 300 [11.811] |
| 16 | 238.5 [9.390] | 275 [10.827] | 257.5 [10.138] | 300 [11.811] |
| 17 | 249.0 [9.803] | 300 [11.811] | 268.0 [10.551] | 325 [12.795] |
| 18 | 259.5 [10.217] | 300 [11.811] | 278.5 [10.965] | 325 [12.795] |
| 19 | 270.0 [10.630] | 325 [12.795] | 289.0 [11.378] | 325 [12.795] |
| 20 | 280.5 [11.043] | 325 [12.795] | 299.5 [11.791] | 350 [13.780] |

Note: When two piping blocks are used.
* For right-side mounting wiring (-R), add 5.5 mm [0.217 in] to the L1 (L2) dimension.

## F10M Number of valves PHL Pilot specifications (Base piping type)

With manifold outlet port female thread block
Terminal block type

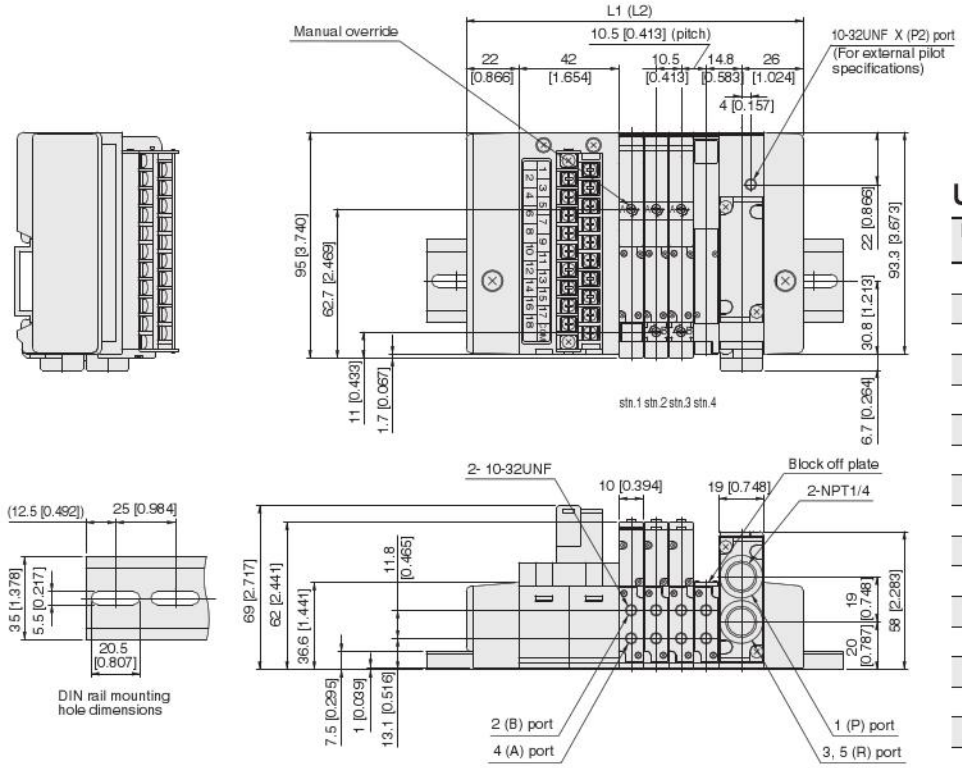


### Unit dimensions

| Number of units | L1 | Length of DIN rail | L2 Note | Length of DIN rail Note |
|---|---|---|---|---|
| 2 | 120.5 [4.744] | 150 [5.906] | 139.5 [5.492] | 175 [6.890] |
| 3 | 131.0 [5.157] | 175 [6.890] | 150.0 [5.906] | 175 [6.890] |
| 4 | 141.5 [5.571] | 175 [6.890] | 160.5 [6.319] | 200 [7.874] |
| 5 | 152.0 [5.984] | 200 [7.874] | 171.0 [6.732] | 200 [7.874] |
| 6 | 162.5 [6.398] | 200 [7.874] | 181.5 [7.146] | 225 [8.858] |
| 7 | 173.0 [6.811] | 200 [7.874] | 192.0 [7.559] | 225 [8.858] |
| 8 | 183.5 [7.224] | 225 [8.858] | 202.5 [7.972] | 250 [9.843] |
| 9 | 194.0 [7.638] | 225 [8.858] | 213.0 [8.386] | 250 [9.843] |
| 10 | 204.5 [8.051] | 250 [9.843] | 223.5 [8.799] | 250 [9.843] |
| 11 | 215.0 [8.465] | 250 [9.843] | 234.0 [9.213] | 275 [10.827] |
| 12 | 225.5 [8.878] | 275 [10.827] | 244.5 [9.626] | 275 [10.827] |
| 13 | 236.0 [9.291] | 275 [10.827] | 255.0 [10.039] | 300 [11.811] |
| 14 | 246.5 [9.705] | 275 [10.827] | 265.5 [10.453] | 300 [11.811] |
| 15 | 257.0 [10.118] | 300 [11.811] | 276.0 [10.866] | 325 [12.795] |
| 16 | 267.5 [10.531] | 300 [11.811] | 286.5 [11.280] | 325 [12.795] |
| 17 | 278.0 [10.945] | 325 [12.795] | 297.0 [11.693] | 325 [12.795] |
| 18 | 288.5 [11.358] | 325 [12.795] | 307.5 [12.106] | 350 [13.780] |

Note: When two piping blocks are used.

## F10M Number of valves PH Pilot specifications (Direct piping type)

With valve outlet port female thread block
Terminal block type

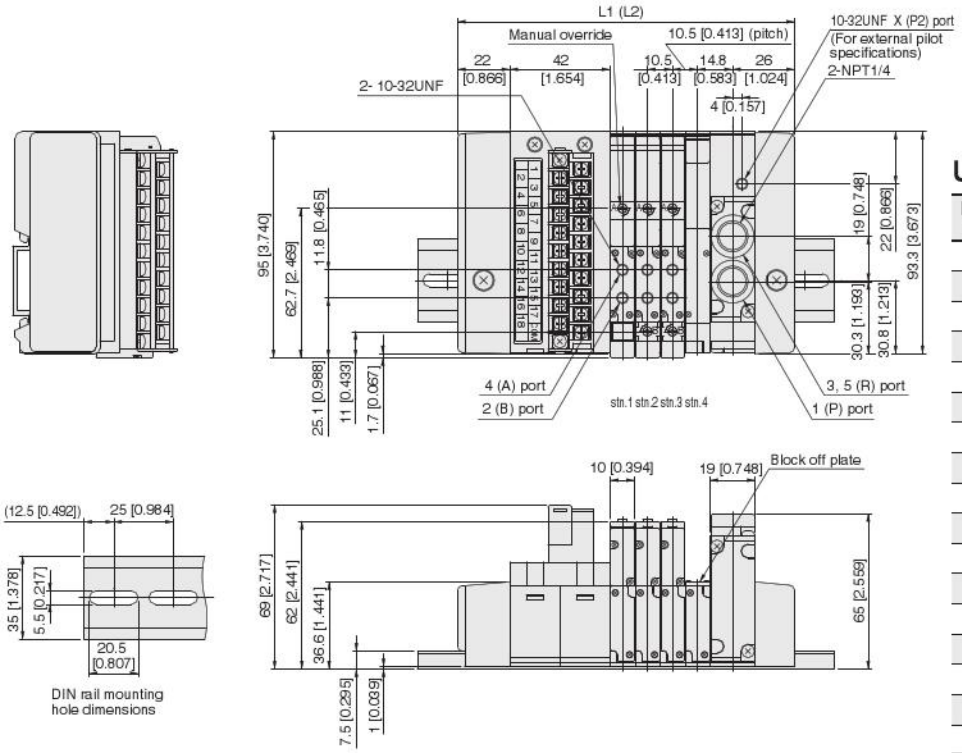


### Unit dimensions

| Number of units | L1 | Length of DIN rail | L2 Note | Length of DIN rail Note |
|---|---|---|---|---|
| 2 | 120.5 [4.744] | 150 [5.906] | 139.5 [5.492] | 175 [6.890] |
| 3 | 131.0 [5.157] | 175 [6.890] | 150.0 [5.906] | 175 [6.890] |
| 4 | 141.5 [5.571] | 175 [6.890] | 160.5 [6.319] | 200 [7.874] |
| 5 | 152.0 [5.984] | 200 [7.874] | 171.0 [6.732] | 200 [7.874] |
| 6 | 162.5 [6.398] | 200 [7.874] | 181.5 [7.146] | 225 [8.858] |
| 7 | 173.0 [6.811] | 200 [7.874] | 192.0 [7.559] | 225 [8.858] |
| 8 | 183.5 [7.224] | 225 [8.858] | 202.5 [7.972] | 250 [9.843] |
| 9 | 194.0 [7.638] | 225 [8.858] | 213.0 [8.386] | 250 [9.843] |
| 10 | 204.5 [8.051] | 250 [9.843] | 223.5 [8.799] | 250 [9.843] |
| 11 | 215.0 [8.465] | 250 [9.843] | 234.0 [9.213] | 275 [10.827] |
| 12 | 225.5 [8.878] | 275 [10.827] | 244.5 [9.626] | 275 [10.827] |
| 13 | 236.0 [9.291] | 275 [10.827] | 255.0 [10.039] | 300 [11.811] |
| 14 | 246.5 [9.705] | 275 [10.827] | 265.5 [10.453] | 300 [11.811] |
| 15 | 257.0 [10.118] | 300 [11.811] | 276.0 [10.866] | 325 [12.795] |
| 16 | 267.5 [10.531] | 300 [11.811] | 286.5 [11.280] | 325 [12.795] |
| 17 | 278.0 [10.945] | 325 [12.795] | 297.0 [11.693] | 325 [12.795] |
| 18 | 288.5 [11.358] | 325 [12.795] | 307.5 [12.106] | 350 [13.780] |

Note: When two piping blocks are used.

## F10M Number of valves S J/M/L Pilot specifications (Base piping type)

With manifold outlet port dual use fitting block

(Integrated serial transmission block compatible model)

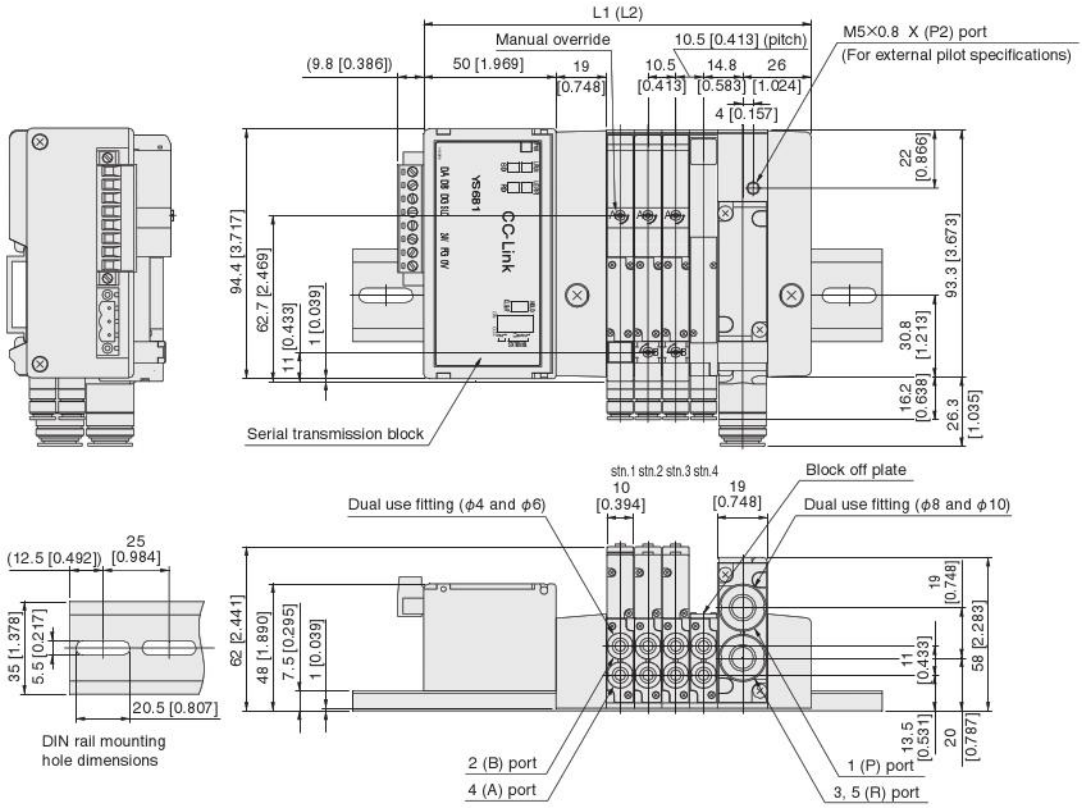


## Unit dimensions

| Number of units | L1 | Length of DIN rail | L2 Note | Length of DIN rail Note |
|---|---|---|---|---|
| 2 | 125.5 [4.941] | 175 [6.890] | 144.5 [5.689] | 200 [7.874] |
| 3 | 136.0 [5.354] | 200 [7.874] | 155.0 [6.102] | 200 [7.874] |
| 4 | 146.5 [5.768] | 200 [7.874] | 165.5 [6.516] | 225 [8.858] |
| 5 | 157.0 [6.181] | 200 [7.874] | 176.0 [6.929] | 225 [8.858] |
| 6 | 167.5 [6.594] | 225 [8.858] | 186.5 [7.343] | 250 [9.843] |
| 7 | 178.0 [7.008] | 225 [8.858] | 197.0 [7.756] | 250 [9.843] |
| 8 | 188.5 [7.421] | 250 [9.843] | 207.5 [8.169] | 250 [9.843] |
| 9 | 199.0 [7.835] | 250 [9.843] | 218.0 [8.583] | 275 [10.827] |
| 10 | 209.5 [8.248] | 250 [9.843] | 228.5 [8.996] | 275 [10.827] |
| 11 | 220.0 [8.661] | 275 [10.827] | 239.0 [9.409] | 300 [11.811] |
| 12 | 230.5 [9.075] | 275 [10.827] | 249.5 [9.823] | 300 [11.811] |
| 13 | 241.0 [9.488] | 300 [11.811] | 260.0 [10.236] | 300 [11.811] |
| 14 | 251.5 [9.902] | 300 [11.811] | 270.5 [10.650] | 325 [12.795] |
| 15 | 262.0 [10.315] | 325 [12.795] | 281.0 [11.063] | 325 [12.795] |
| 16 | 272.5 [10.728] | 325 [12.795] | 291.5 [11.476] | 350 [13.780] |
| 17 | 283.0 [11.142] | 350 [13.780] | 302.0 [11.890] | 375 [14.764] |
| 18 | 293.5 [11.555] | 350 [13.780] | 312.5 [12.303] | 375 [14.764] |
| 19 | 304.0 [11.969] | 350 [13.780] | 323.0 [12.717] | 375 [14.764] |
| 20 | 314.5 [12.382] | 375 [14.764] | 333.5 [13.130] | 400 [15.748] |

Note: When two piping blocks are used.
* For right-side mounting wiring (-R), add 5.5 mm [0.217 in] to the L1 (L2) dimension.

## F10M Number of valves SHL Pilot specifications (Base piping type)

With manifold outlet port female thread block

(Integrated serial transmission block compatible manifold)

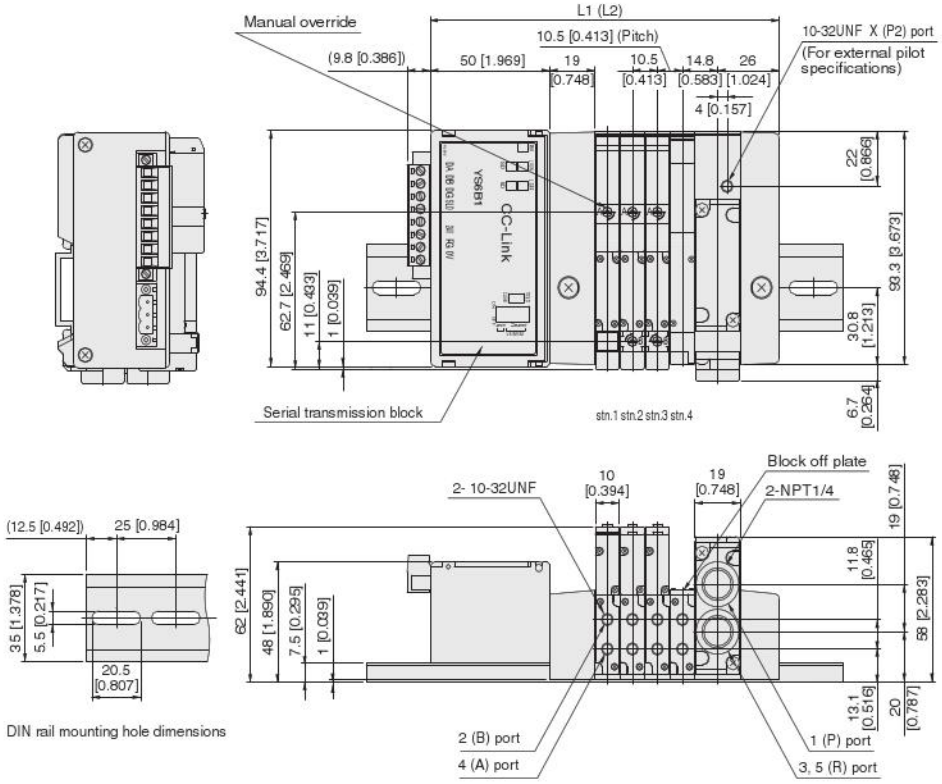


### Unit dimensions

| Number of units | L1 | Length of DIN rail | L2 Note | Length of DIN rail Note |
|---|---|---|---|---|
| 2 | 125.5 [4.941] | 175 [6.890] | 144.5 [5.689] | 200 [7.874] |
| 3 | 136.0 [5.354] | 200 [7.874] | 155.0 [6.102] | 200 [7.874] |
| 4 | 146.5 [5.768] | 200 [7.874] | 165.5 [6.516] | 225 [8.858] |
| 5 | 157.0 [6.181] | 200 [7.874] | 176.0 [6.929] | 225 [8.858] |
| 6 | 167.5 [6.594] | 225 [8.858] | 186.5 [7.343] | 250 [9.843] |
| 7 | 178.0 [7.008] | 225 [8.858] | 197.0 [7.756] | 250 [9.843] |
| 8 | 188.5 [7.421] | 250 [9.843] | 207.5 [8.169] | 250 [9.843] |
| 9 | 199.0 [7.835] | 250 [9.843] | 218.0 [8.583] | 275 [10.827] |
| 10 | 209.5 [8.248] | 250 [9.843] | 228.5 [8.996] | 275 [10.827] |
| 11 | 220.0 [8.661] | 275 [10.827] | 239.0 [9.409] | 300 [11.811] |
| 12 | 230.5 [9.075] | 275 [10.827] | 249.5 [9.823] | 300 [11.811] |
| 13 | 241.0 [9.488] | 300 [11.811] | 260.0 [10.236] | 300 [11.811] |
| 14 | 251.5 [9.902] | 300 [11.811] | 270.5 [10.650] | 325 [12.795] |
| 15 | 262.0 [10.315] | 325 [12.795] | 281.0 [11.063] | 325 [12.795] |
| 16 | 272.5 [10.728] | 325 [12.795] | 291.5 [11.476] | 350 [13.780] |
| 17 | 283.0 [11.142] | 350 [13.780] | 302.0 [11.890] | 375 [14.764] |
| 18 | 293.5 [11.555] | 350 [13.780] | 312.5 [12.303] | 375 [14.764] |
| 19 | 304.0 [11.969] | 350 [13.780] | 323.0 [12.717] | 375 [14.764] |
| 20 | 314.5 [12.382] | 375 [14.764] | 333.5 [13.130] | 400 [15.748] |

Note: When two piping blocks are used.
* For right-side mounting wiring (-R), add 5.5 mm [0.217 in] to the L1 (L2) dimension.

## F10M Number of valves SH Pilot specifications (Direct piping type)

With valve outlet port female thread block

(Integrated serial transmission block compatible manifold)

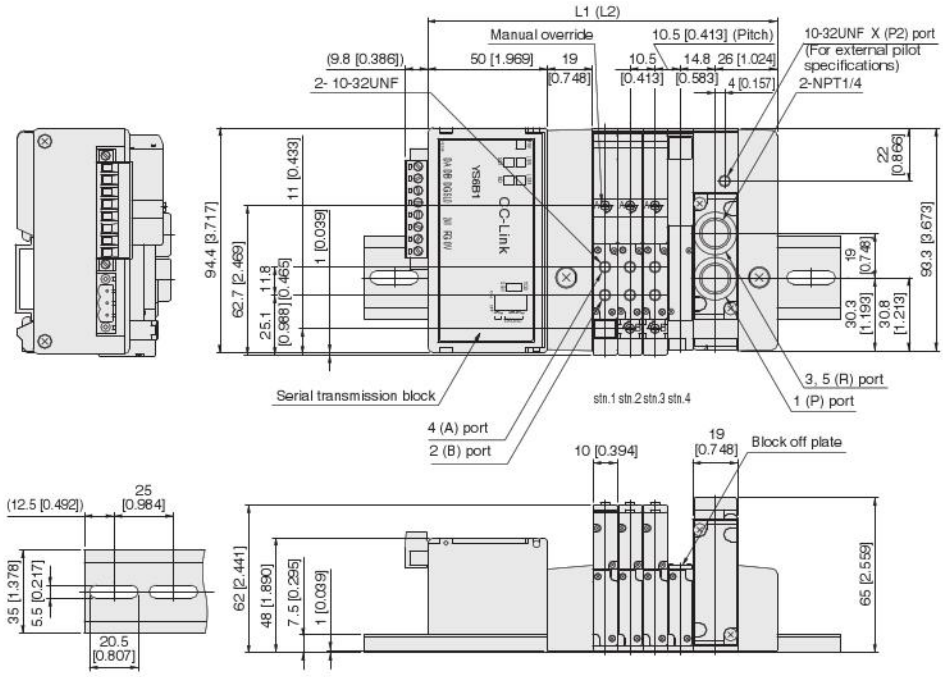


### Unit dimensions

| Number of units | L1 | Length of DIN rail | L2 Note | Length of DIN rail Note |
|---|---|---|---|---|
| 2 | 125.5 [4.941] | 175 [6.890] | 144.5 [5.689] | 200 [7.874] |
| 3 | 136.0 [5.354] | 200 [7.874] | 155.0 [6.102] | 200 [7.874] |
| 4 | 146.5 [5.768] | 200 [7.874] | 165.5 [6.516] | 225 [8.858] |
| 5 | 157.0 [6.181] | 200 [7.874] | 176.0 [6.929] | 225 [8.858] |
| 6 | 167.5 [6.594] | 225 [8.858] | 186.5 [7.343] | 250 [9.843] |
| 7 | 178.0 [7.008] | 225 [8.858] | 197.0 [7.756] | 250 [9.843] |
| 8 | 188.5 [7.421] | 250 [9.843] | 207.5 [8.169] | 250 [9.843] |
| 9 | 199.0 [7.835] | 250 [9.843] | 218.0 [8.583] | 275 [10.827] |
| 10 | 209.5 [8.248] | 250 [9.843] | 228.5 [8.996] | 275 [10.827] |
| 11 | 220.0 [8.661] | 275 [10.827] | 239.0 [9.409] | 300 [11.811] |
| 12 | 230.5 [9.075] | 275 [10.827] | 249.5 [9.823] | 300 [11.811] |
| 13 | 241.0 [9.488] | 300 [11.811] | 260.0 [10.236] | 300 [11.811] |
| 14 | 251.5 [9.902] | 300 [11.811] | 270.5 [10.650] | 325 [12.795] |
| 15 | 262.0 [10.315] | 325 [12.795] | 281.0 [11.063] | 325 [12.795] |
| 16 | 272.5 [10.728] | 325 [12.795] | 291.5 [11.476] | 350 [13.780] |
| 17 | 283.0 [11.142] | 350 [13.780] | 302.0 [11.890] | 375 [14.764] |
| 18 | 293.5 [11.555] | 350 [13.780] | 312.5 [12.303] | 375 [14.764] |
| 19 | 304.0 [11.969] | 350 [13.780] | 323.0 [12.717] | 375 [14.764] |
| 20 | 314.5 [12.382] | 375 [14.764] | 333.5 [13.130] | 400 [15.748] |

Note: When two piping blocks are used.
* For right-side mounting wiring (-R), add 5.5 mm [0.217 in] to the L1 (L2) dimension.

## F10M [Number of valves] S [J/M/L] [Pilot specifications] (Base piping type)

With manifold outlet port dual use fitting block

(Stand alone serial transmission block compatible manifold)

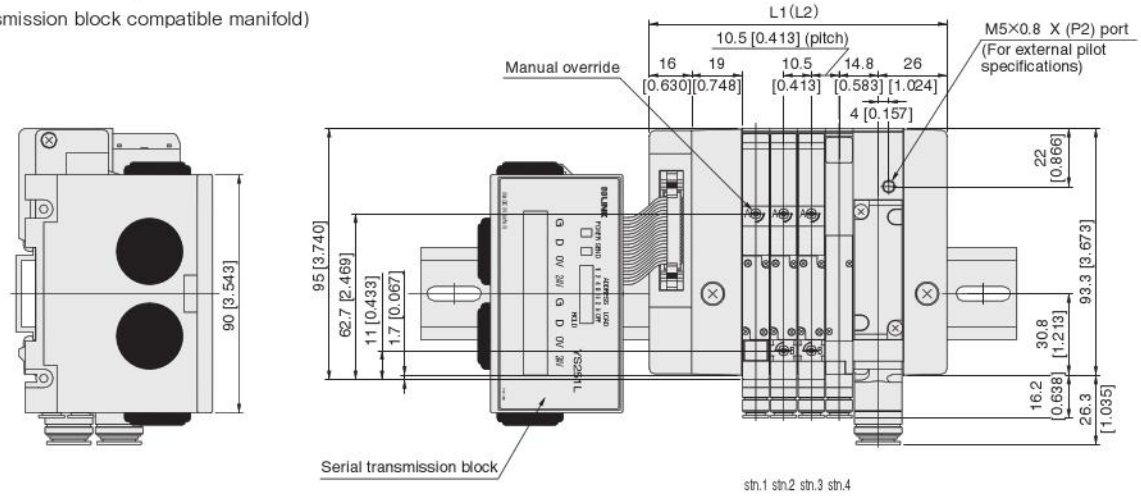


## Unit dimensions

| Number of units | L1 | Length of DIN rail | L2 Note | Length of DIN rail Note |
|---|---|---|---|---|
| 2 | 91.5 [3.602] | 200 [7.874] | 110.5 [4.350] | 200 [7.874] |
| 3 | 102.0 [4.016] | 200 [7.874] | 121.0 [4.764] | 225 [8.858] |
| 4 | 112.5 [4.429] | 225 [8.858] | 131.5 [5.177] | 225 [8.858] |
| 5 | 123.0 [4.843] | 225 [8.858] | 142.0 [5.591] | 250 [9.843] |
| 6 | 133.5 [5.256] | 225 [8.858] | 152.5 [6.004] | 250 [9.843] |
| 7 | 144.0 [5.669] | 250 [9.843] | 163.0 [6.417] | 275 [10.827] |
| 8 | 154.5 [6.083] | 250 [9.843] | 173.5 [6.831] | 275 [10.827] |
| 9 | 165.0 [6.496] | 275 [10.827] | 184.0 [7.244] | 275 [10.827] |
| 10 | 175.5 [6.909] | 275 [10.827] | 194.5 [7.657] | 300 [11.811] |
| 11 | 186.0 [7.323] | 300 [11.811] | 205.0 [8.071] | 300 [11.811] |
| 12 | 196.5 [7.736] | 300 [11.811] | 215.5 [8.484] | 325 [12.795] |
| 13 | 207.0 [8.150] | 300 [11.811] | 226.0 [8.898] | 325 [12.795] |
| 14 | 217.5 [8.563] | 325 [12.795] | 236.5 [9.311] | 350 [13.780] |
| 15 | 228.0 [8.976] | 325 [12.795] | 247.0 [9.724] | 350 [13.780] |
| 16 | 238.5 [9.390] | 350 [13.780] | 257.5 [10.138] | 350 [13.780] |

Note: When two piping blocks are used.
* For right-side mounting wiring (-R), add 5.5 mm [0.217 in] to the L1 (L2) dimension.

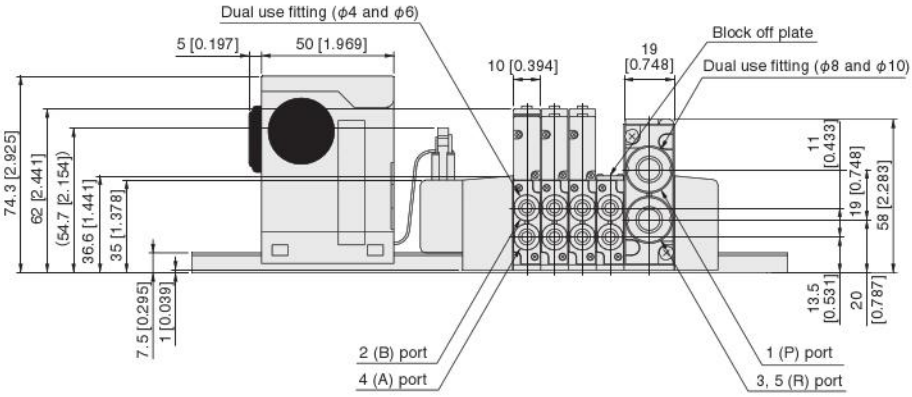


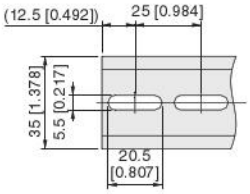


DIN rail mounting hole dimensions

## Additional Parts (available separately)

● Muffler: **KM-J10** for both plug-in and non-plug-in

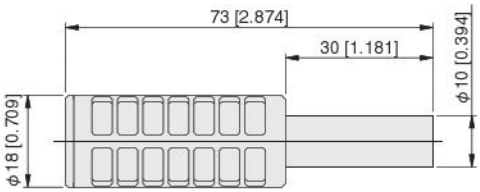


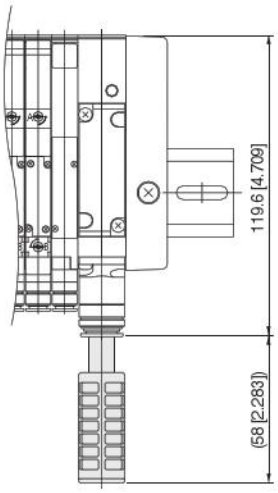

## F10M Number of valves SHL Pilot specifications (Base piping type)

With manifold outlet port female thread block

(Stand alone serial transmission block compatible manifold)

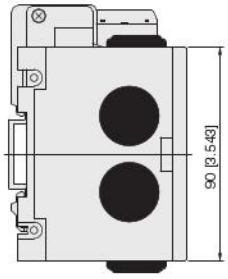


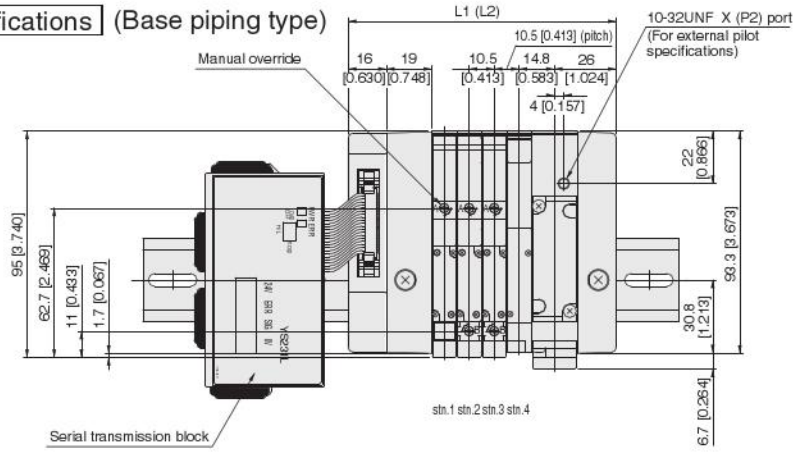


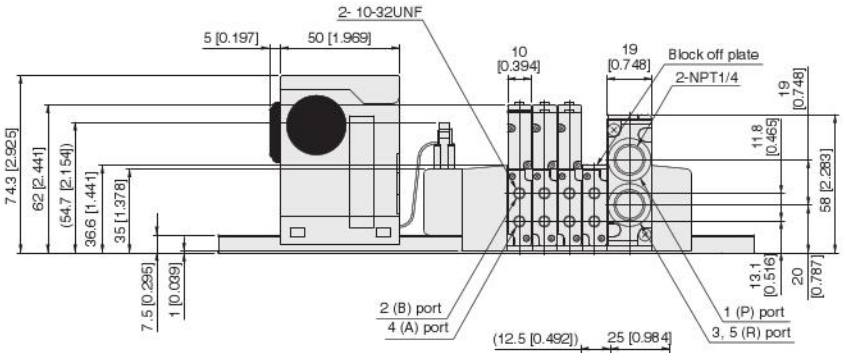


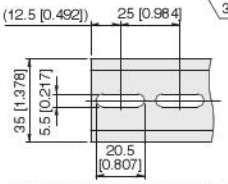


DIN rail mounting hole dimensions

### Unit dimensions

| Number of units | L1 | Length of DIN rail | L2 Note | Length of DIN rail Note |
|---|---|---|---|---|
| 2 | 91.5 [3.602] | 200 [7.874] | 110.5 [4.350] | 200 [7.874] |
| 3 | 102.0 [4.016] | 200 [7.874] | 121.0 [4.764] | 225 [8.858] |
| 4 | 112.5 [4.429] | 225 [8.858] | 131.5 [5.177] | 225 [8.858] |
| 5 | 123.0 [4.843] | 225 [8.858] | 142.0 [5.591] | 250 [9.843] |
| 6 | 133.5 [5.256] | 225 [8.858] | 152.5 [6.004] | 250 [9.843] |
| 7 | 144.0 [5.669] | 250 [9.843] | 163.0 [6.417] | 275 [10.827] |
| 8 | 154.5 [6.083] | 250 [9.843] | 173.5 [6.831] | 275 [10.827] |
| 9 | 165.0 [6.496] | 275 [10.827] | 184.0 [7.244] | 275 [10.827] |
| 10 | 175.5 [6.909] | 275 [10.827] | 194.5 [7.657] | 300 [11.811] |
| 11 | 186.0 [7.323] | 300 [11.811] | 205.0 [8.071] | 300 [11.811] |
| 12 | 196.5 [7.736] | 300 [11.811] | 215.5 [8.484] | 325 [12.795] |
| 13 | 207.0 [8.150] | 300 [11.811] | 226.0 [8.898] | 325 [12.795] |
| 14 | 217.5 [8.563] | 325 [12.795] | 236.5 [9.311] | 350 [13.780] |
| 15 | 228.0 [8.976] | 325 [12.795] | 247.0 [9.724] | 350 [13.780] |
| 16 | 238.5 [9.390] | 350 [13.780] | 257.5 [10.138] | 350 [13.780] |

Note: When two piping blocks are used.
*For right-side mounting wiring (-R), add 5.5 mm [0.217 in] to the L1 (L2) dimension.

## F10M Number of valves SH Pilot specifications (Direct piping type)

With valve outlet port female thread block

(Stand alone serial transmission block compatible manifold)

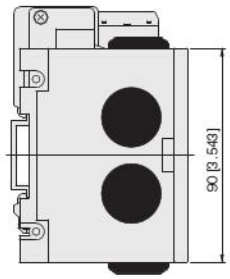


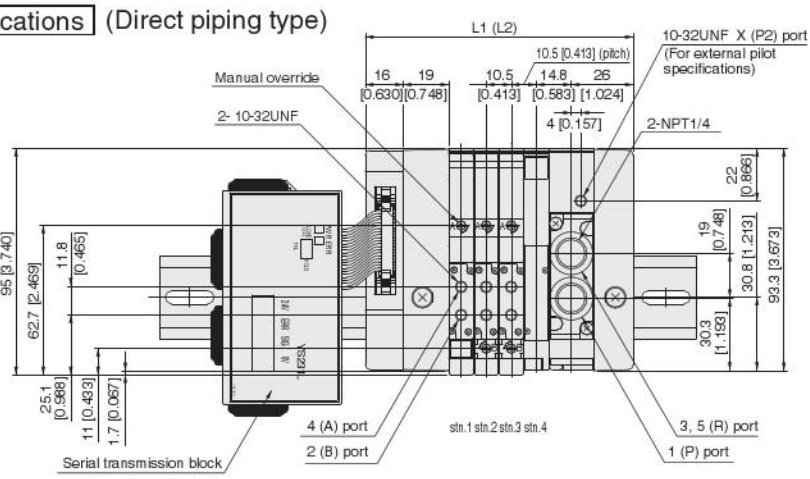


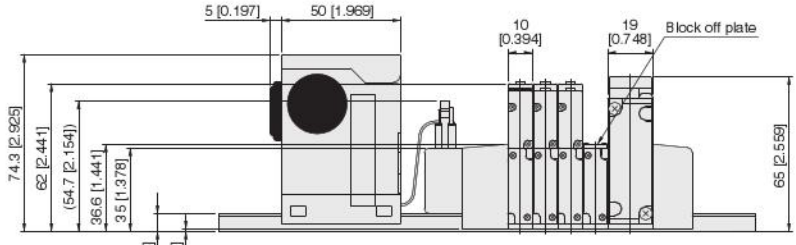


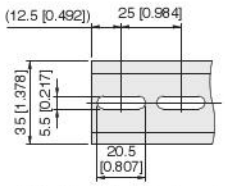


DIN rail mounting hole dimensions

### Unit dimensions

| Number of units | L1 | Length of DIN rail | L2 Note | Length of DIN rail Note |
|---|---|---|---|---|
| 2 | 91.5 [3.602] | 200 [7.874] | 110.5 [4.350] | 200 [7.874] |
| 3 | 102.0 [4.016] | 200 [7.874] | 121.0 [4.764] | 225 [8.858] |
| 4 | 112.5 [4.429] | 225 [8.858] | 131.5 [5.177] | 225 [8.858] |
| 5 | 123.0 [4.843] | 225 [8.858] | 142.0 [5.591] | 250 [9.843] |
| 6 | 133.5 [5.256] | 225 [8.858] | 152.5 [6.004] | 250 [9.843] |
| 7 | 144.0 [5.669] | 250 [9.843] | 163.0 [6.417] | 275 [10.827] |
| 8 | 154.5 [6.083] | 250 [9.843] | 173.5 [6.831] | 275 [10.827] |
| 9 | 165.0 [6.496] | 275 [10.827] | 184.0 [7.244] | 275 [10.827] |
| 10 | 175.5 [6.909] | 275 [10.827] | 194.5 [7.657] | 300 [11.811] |
| 11 | 186.0 [7.323] | 300 [11.811] | 205.0 [8.071] | 300 [11.811] |
| 12 | 196.5 [7.736] | 300 [11.811] | 215.5 [8.484] | 325 [12.795] |
| 13 | 207.0 [8.150] | 300 [11.811] | 226.0 [8.898] | 325 [12.795] |
| 14 | 217.5 [8.563] | 325 [12.795] | 236.5 [9.311] | 350 [13.780] |
| 15 | 228.0 [8.976] | 325 [12.795] | 247.0 [9.724] | 350 [13.780] |
| 16 | 238.5 [9.390] | 350 [13.780] | 257.5 [10.138] | 350 [13.780] |

Note: When two piping blocks are used.
*For right-side mounting wiring (-R), add 5.5 mm [0.217 in] to the L1 (L2) dimension.

## F10M Number of valves SHL Pilot specifications (Base piping type)

With manifold outlet port female thread block

(EtherCAT)
(EtherNet/IP) ※ The dimensions is EtherCAT.

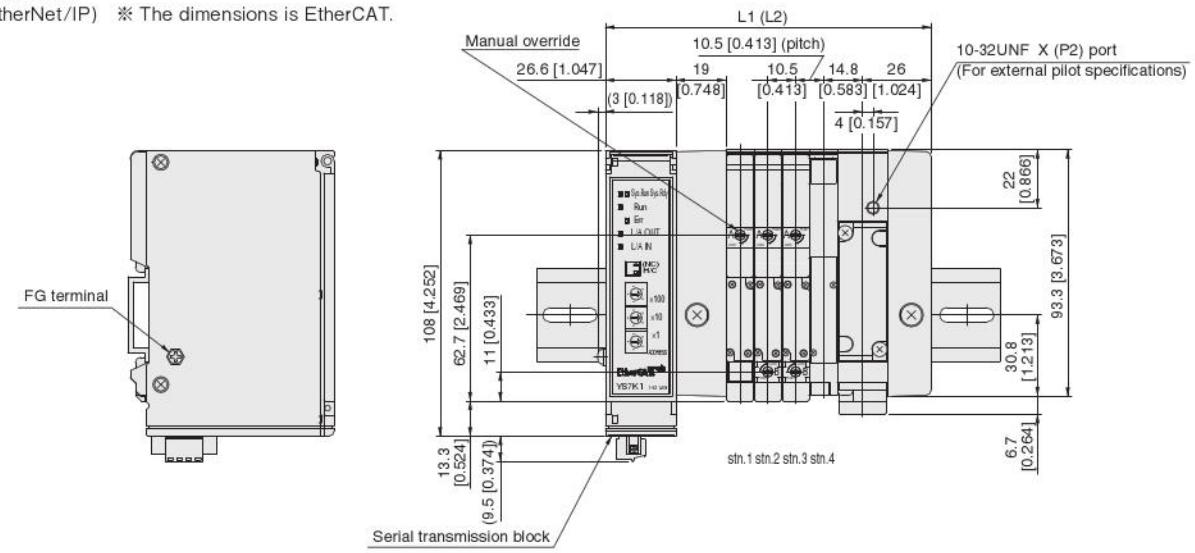


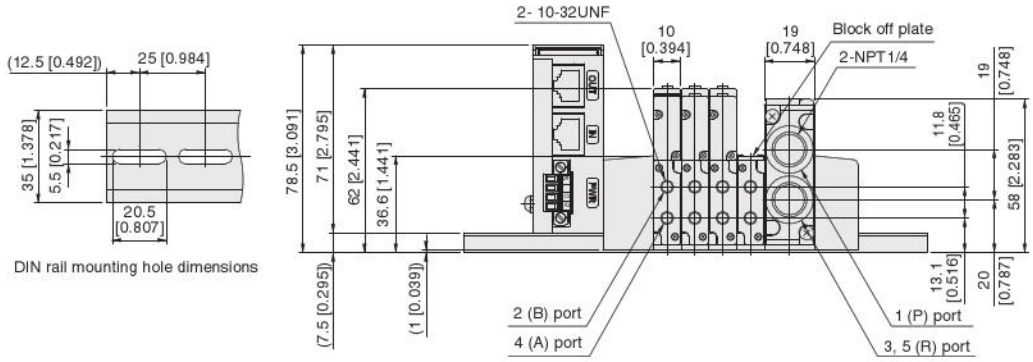


## Unit dimensions

| Number of units | L1 | Length of DIN rail | L2 Note | Length of DIN rail Note |
|---|---|---|---|---|
| 2 | 120.1 [4.728] | 150 [5.906] | 121.1 [4.768] | 175 [6.890] |
| 3 | 112.6 [4.433] | 175 [6.890] | 131.6 [5.181] | 175 [6.890] |
| 4 | 123.1 [4.846] | 175 [6.890] | 142.1 [5.594] | 200 [7.874] |
| 5 | 133.6 [5.260] | 175 [6.890] | 152.6 [6.008] | 200 [7.874] |
| 6 | 144.1 [5.673] | 200 [7.874] | 163.1 [6.421] | 225 [8.858] |
| 7 | 154.6 [6.087] | 200 [7.874] | 173.6 [6.835] | 225 [8.858] |
| 8 | 165.1 [6.500] | 225 [8.858] | 184.1 [7.248] | 225 [8.858] |
| 9 | 175.6 [6.913] | 225 [8.858] | 194.6 [7.661] | 250 [9.843] |
| 10 | 186.1 [7.327] | 225 [8.858] | 205.1 [8.075] | 250 [9.843] |
| 11 | 196.6 [7.740] | 250 [9.843] | 215.6 [8.488] | 275 [10.827] |
| 12 | 207.1 [8.154] | 250 [9.843] | 226.1 [8.902] | 275 [10.827] |
| 13 | 217.6 [8.567] | 275 [10.827] | 236.6 [9.315] | 275 [10.827] |
| 14 | 228.1 [8.980] | 275 [10.827] | 247.1 [9.728] | 300 [11.811] |
| 15 | 238.6 [9.394] | 300 [11.811] | 257.6 [10.142] | 300 [11.811] |
| 16 | 249.1 [9.807] | 300 [11.811] | 268.1 [10.555] | 325 [12.795] |
| 17 | 259.6 [10.220] | 325 [12.795] | 278.6 [10.969] | 350 [13.780] |
| 18 | 270.1 [10.634] | 325 [12.795] | 289.1 [11.382] | 350 [13.780] |
| 19 | 280.6 [11.047] | 325 [12.795] | 299.6 [11.795] | 350 [13.780] |
| 20 | 291.1 [11.461] | 350 [13.780] | 310.1 [12.209] | 375 [14.764] |

Note: When two piping blocks are used.
* For right-side mounting wiring (-R), add 5.5 mm [0.217 in] to the L1 (L2) dimension.

## F10M Number of valves SH Pilot specifications (Direct piping type)

With valve outlet port female thread block

(EtherCAT)
(EtherNet/IP) ※ The dimensions is EtherCAT.

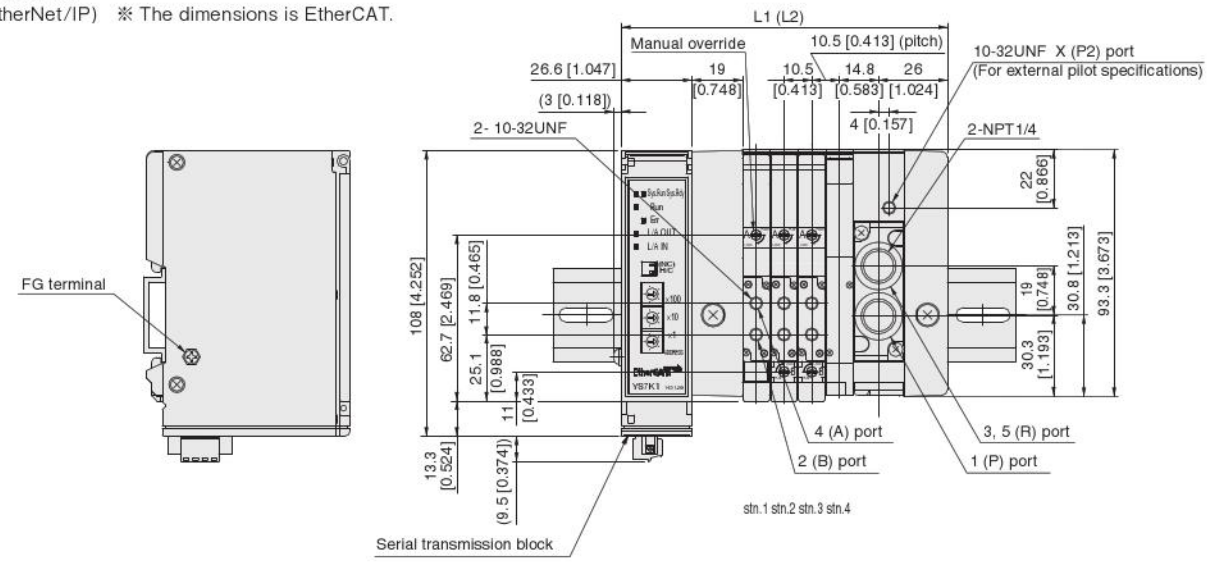


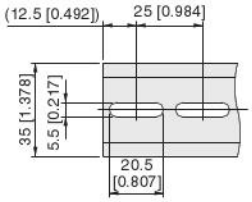


DIN rail mounting hole dimensions

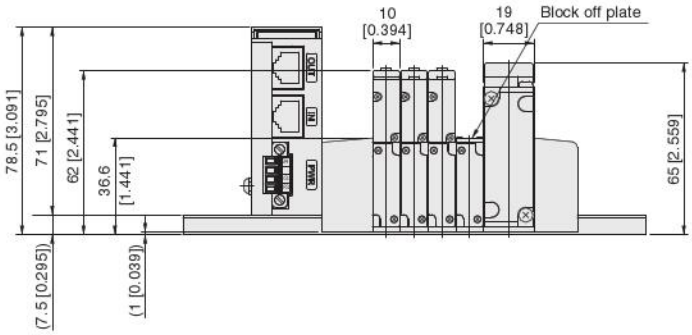


### Unit dimensions

| Number of units | L1 | Length of DIN rail | L2 Note | Length of DIN rail Note |
|---|---|---|---|---|
| 2 | 120.1 [4.728] | 150 [5.906] | 121.1 [4.768] | 175 [6.890] |
| 3 | 112.6 [4.433] | 175 [6.890] | 131.6 [5.181] | 175 [6.890] |
| 4 | 123.1 [4.846] | 175 [6.890] | 142.1 [5.594] | 200 [7.874] |
| 5 | 133.6 [5.260] | 175 [6.890] | 152.6 [6.008] | 200 [7.874] |
| 6 | 144.1 [5.673] | 200 [7.874] | 163.1 [6.421] | 225 [8.858] |
| 7 | 154.6 [6.087] | 200 [7.874] | 173.6 [6.835] | 225 [8.858] |
| 8 | 165.1 [6.500] | 225 [8.858] | 184.1 [7.248] | 225 [8.858] |
| 9 | 175.6 [6.913] | 225 [8.858] | 194.6 [7.661] | 250 [9.843] |
| 10 | 186.1 [7.327] | 225 [8.858] | 205.1 [8.075] | 250 [9.843] |
| 11 | 196.6 [7.740] | 250 [9.843] | 215.6 [8.488] | 275 [10.827] |
| 12 | 207.1 [8.154] | 250 [9.843] | 226.1 [8.902] | 275 [10.827] |
| 13 | 217.6 [8.567] | 275 [10.827] | 236.6 [9.315] | 275 [10.827] |
| 14 | 228.1 [8.980] | 275 [10.827] | 247.1 [9.728] | 300 [11.811] |
| 15 | 238.6 [9.394] | 300 [11.811] | 257.6 [10.142] | 300 [11.811] |
| 16 | 249.1 [9.807] | 300 [11.811] | 268.1 [10.555] | 325 [12.795] |
| 17 | 259.6 [10.220] | 325 [12.795] | 278.6 [10.969] | 350 [13.780] |
| 18 | 270.1 [10.634] | 325 [12.795] | 289.1 [11.382] | 350 [13.780] |
| 19 | 280.6 [11.047] | 325 [12.795] | 299.6 [11.795] | 350 [13.780] |
| 20 | 291.1 [11.461] | 350 [13.780] | 310.1 [12.209] | 375 [14.764] |

Note: When two piping blocks are used.
* For right-side mounting wiring (-R), add 5.5 mm [0.217 in] to the L1 (L2) dimension.

# SOLENOID VALVES
## F15 SERIES

## Contents


Specifications — 138
Dimensions of Single Valve Unit — 144
Dimensions of Monoblock Manifold — 147
Dimensions of Monoblock Manifold, Wire-saving Type — 150
Dimensions of PC Board Manifold — 152
Dimensions of Split Manifold Non-plug-in Type — 153
Dimensions of Split Manifold Plug-in Type — 155
Dimensions of Serial Transmission Compatible Manifold — 164


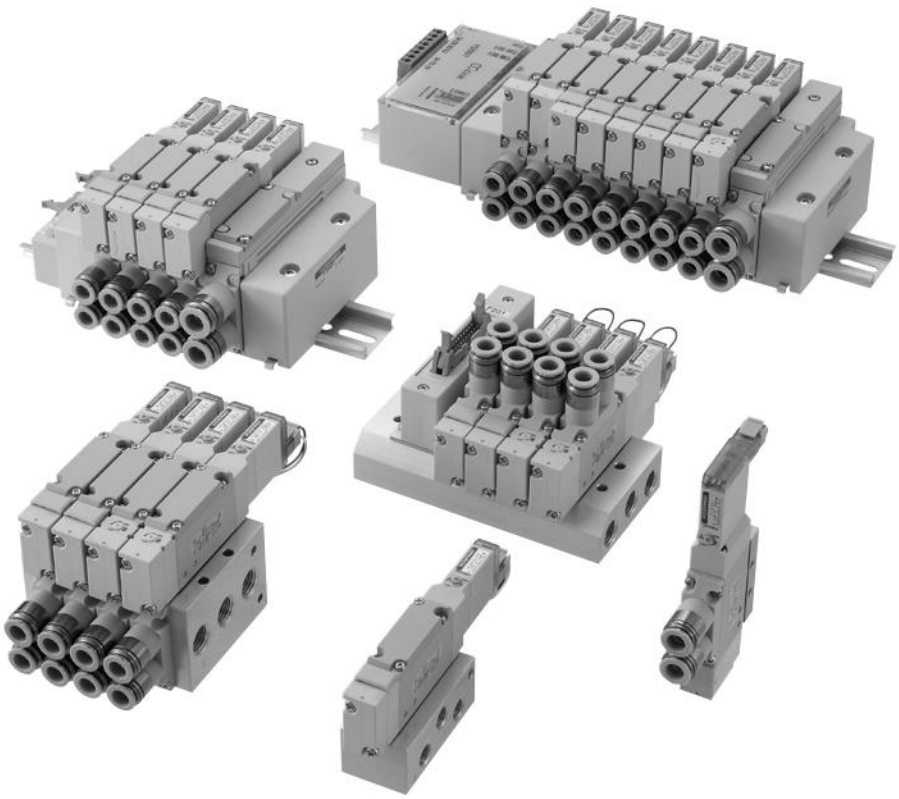

# F15 SERIES Specifications

## Specifications

### Basic Models and Valve Functions

| Item \ Basic model | F15□T0 | F15□T1<br>F15□T2 | F15□T3<br>F15□T4<br>F15□T5 | F15□TA<br>F15□TB<br>F15□TC |
|---|---|---|---|---|
| Number of positions | 2 positions | | 3 positions | 4 positions |
| Number of ports | 5 | | | Tandem 3-port |
| Valve function | Single solenoid only | Both single and double solenoid use | Closed center, Exhaust center, Pressure center | NC/NC, NO/NO, NC/NO |

Remark: For the optional specifications and order codes, see p.44-71.

### Specifications

| Item \ Basic model | | F15□T0<br>F15□T1<br>F15□T2 | F15□T3<br>F15□T4<br>F15□T5 | F15□TA<br>F15□TB<br>F15□TC | F15□T0G<br>F15□T1G<br>F15□T2G | F15□T3G<br>F15□T4G<br>F15□T5G | F15□T0V<br>F15□T1V<br>F15□T2V | F15□T3V |
|---|---|---|---|---|---|---|---|---|
| Media | | Air | | | | | | |
| Operation type | | Internal pilot type | | | External pilot type (for positive pressure) | | External pilot type (for vacuum) | |
| Flow rate characteristics | Sonic conductance C $dm^3/(s \cdot bar)$ Note1 | 2.05 | 2.05 | 1.60 | 2.05 | 2.05 | 2.05 | 2.05 |
| | Effective area Note2 $mm^2$ [Cv] | 10.3 [0.57] | 10.3 [0.57] | 8 [0.44] | 10.3 [0.57] | 10.3 [0.57] | 10.3 [0.57] | 10.3 [0.57] |
| Port size Note3 | | Dual use fitting for $\phi$6 and $\phi$8, Rc1/8, NPT1/8 | | | M5×0.8,10-32UNF, dual use fitting for $\phi$6 and $\phi$8, Rc1/8, NTP1/8 | | | |
| Lubrication | | Not required | | | | | | |
| Operating pressure range | Main valve | 0.15~0.7 MPa [22~102 psi.] | | | 0~0.7 MPa [0~102 psi.] Note4 | | −100 kPa~0.15 MPa [−29.53 in.Hg~22 psi.] | |
| | External pilot | —— | | | 0.2~0.7 MPa [29~102 psi.] Note4 | | 0.2~0.7 MPa [29~102 psi.] | |
| Proof pressure MPa [psi.] | | 1.05 [152] | | | | | | |
| Response time Note5 ON/OFF ms | 12VDC, 24VDC | 20/25 (30) or below | 15/45 (50) or below | 20/30 (35) or below | 20/25 (30) or below | 15/45 (50) or below | 20/25 (30) or below | 15/45 (50) or below |
| | 100VAC | 20/25 or below | 15/45 or below | —— | 20/25 or below | 15/45 or below | 20/25 or below | 15/45 or below |
| Maximum operating frequency Hz | | 5 | | | | | | |
| Minimum time to energize for self holding Note6 ms | | 50 | —— | | 50 | —— | 50 | —— |
| Operating temperature range (atmosphere and media) °C [°F] | | 5~50 [41~122] | | | | | | |
| Shock resistance $m/s^2$ [G] | | 294.2 [30] (245 [25]) Figure in parentheses is for when mounted on the split manifold. | | | | | | |
| Mounting direction | | Any | | | | | | |

Notes: 1. For details, see the flow rate characteristics on p.141.
2. The effective area is a calculated value, and not a measured value.
3. For details, see the port size on p.140.
4. When the main valve pressure is 0.2~0.7 MPa [29~102 psi.], set the external pilot pressure to the main valve pressure or higher, and to 0.7 MPa [102 psi.] or less.

Remark: Specification values are based on Koganei test standards.

Notes: 5. Values when air pressure is 0.5 MPa [73 psi.]. For switching phase timing in the AC specification, add a maximum of 5 ms to the response time. The values for 2-position valves are those when used as a single solenoid, and the values for 3-position valves are those when switching from the neutral position of closed center. Values in parentheses ( ) are for low-current type.
6. When used as a double solenoid valve. Excludes **T0**.

## Solenoid Specifications

| Item \ Rated voltage | | | 12VDC | 24VDC (Standard type) | 24VDC (Low-current type) | 100VAC | | 120VAC | |
|---|---|---|---|---|---|---|---|---|---|
| Voltage range | | V | 10.8~13.2 (12±10%) | 21.6~26.4 (24±10%) | 21.6~26.4 (24±10%) | 90~110 (100±10%) | | 108~132 (120±10%) | |
| Rated frequency | | Hz | — | — | — | 50 | 60 | 50 | 60 |
| Standard | Current (when rated voltage is applied) | mA (r.m.s) | 33 | 17 | — | 8 | | 8.3 | |
| Standard | Power consumption | W | 0.4 | 0.4 | — | 0.8 VA | | 1 VA | |
| Low-current type | Current (when rated voltage is applied) | Starting mA | — | — | 17 | — | | — | |
| Low-current type | | Holding mA | | | 4.2 | | | | |
| Low-current type | Power consumption | Starting W | — | — | 0.4 | — | | — | |
| Low-current type | | Holding W | | | 0.1 | | | | |
| Low-current type | Starting time (standard) | ms | — | — | 70 | — | | — | |
| Allowable leakage current | | mA | 2.0 | 1.0 | 1.0 | 1.0 | | 1.0 | |
| Type of insulation | | | Type B | | | | | | |
| Insulation resistance Note 1 | | MΩ | Over 100 | | | | | | |
| Color of LED indicator Note2 | | | 14(SA) : Red, 12(SB) : Green | | | | | | |
| Surge suppression (as standard) | | | Surge absorption transistor | | Flywheel diode | Bridge diode | | | |

Notes: 1. Value at 500VDC megger.
2. The color of the **T0** indicator is red only.

Remark: Specification values are based on Koganei test standards.

## Specifications for DIN Connector (-39□) Type

### Basic Models and Valve Functions

| Item \ Basic model | F15T0 | F15T2 | F15T3<br>F15T4<br>F15T5 |
|---|---|---|---|
| Number of positions | 2 positions | | 3 positions |
| Number of ports | 5 | | |
| Valve function | Single solenoid only | Double solenoid only | Closed center, Exhaust center, Pressure center |

Remark: For the optional specifications and order codes, see p.44-71.

### Specifications

| Item \ Basic model | | F15T0<br>F15T2 | F15T3<br>F15T4<br>F15T5 | F15T0G<br>F15T2G | F15T3G<br>F15T4G<br>F15T5G | F15T0V<br>F15T2V | F15T3V |
|---|---|---|---|---|---|---|---|
| Media | | Air | | | | | |
| Operation type | | Internal pilot type | | External pilot type (for positive pressure) | | External pilot type (for vacuum) | |
| Flow rate characteristics | Sonic conductance C dm³/(s•bar) Note1 | 2.05 | 2.05 | 2.05 | 2.05 | 2.05 | 2.05 |
| | Effective area Note2 mm² (Cv) | 10.3 (0.57) | 10.3 (0.57) | 10.3 (0.57) | 10.3 (0.57) | 10.3 (0.57) | 10.3 (0.57) |
| Port size Note3 | | Dual use fitting for φ6 and φ8, Rc1/8, NPT1/8 | | M5×0.8,10-32UNF, dual use fitting for φ6 and φ8, Rc1/8, NTP1/8 | | | |
| Lubrication | | Not required | | | | | |
| Operating pressure range | Main valve | 0.15～0.7 MPa [22～102 psi.] | | 0～0.7 MPa [0～102 psi.] Note4 | | −100 kPa～0.15 MPa [−29.53 in.Hg～22 psi.] | |
| | External pilot | —— | | 0.2～0.7 MPa [29～102 psi.] Note4 | | 0.2～0.7 MPa [29～102 psi.] | |
| Proof pressure MPa [psi.] | | 1.05 [152] | | | | | |
| Response time Note5 ON/OFF ms | | 20/30 or below | 15/50 or below | 20/30 or below | 15/50 or below | 20/30 or below | 15/50 or below |
| Maximum operating frequency Hz | | 5 | | | | | |
| Minimum time to energize for self holding Note6 ms | | 50 | —— | 50 | —— | 50 | —— |
| Operating temperature range (atmosphere and media) °C [°F] | | 5～50 [41～122] | | | | | |
| Shock resistance m/s² [G] | | 294.2 [30] (245 [25]) Figure in parentheses is for when mounted on the split-type manifold. | | | | | |
| Mounting direction | | Any | | | | | |

Notes: 1. For details, see the flow rate characteristics on p.141.
2. The effective area is a calculated value, and not a measured value.
3. For details, see the port size on p.140.
4. When the main valve pressure is 0.2～0.7 MPa [29～102 psi.], set the external pilot pressure to the main valve pressure or higher, and to 0.7 MPa [102 psi.] or less.
5. Values when air pressure is 0.5 MPa [73 psi.]. For switching phase timing in the AC specification, add a maximum of 5 ms to the response time. The values for 2-position valves are those when used as a single solenoid, and the values for 3-position valves are those when switching from the neutral position of closed center.
6. In the case of double solenoid.

Remark: Specification values are based on Koganei test standards.

## Solenoid Specifications for DIN Connector (-39□) Type

| Item \ Rated voltage | | 12VDC | 24VDC | 120VAC | | 240VAC | |
|---|---|---|---|---|---|---|---|
| Voltage range V | | 10.8～13.2<br>(12±10%) | 21.6～26.4<br>(24±10%) | 90～132 | | 180～264 | |
| Current | Frequency Hz | — | — | 50 | 60 | 50 | 60 |
| | Starting mA (r.m.s) | — | — | 43 | 38 | 22 | 19 |
| | Holding mA (r.m.s) | 140 (1.7W) | 75 (1.8W) | 29 | 24 | 14 | 12 |
| Allowable leakage current mA | | 8 | 4 | 4 | | 2 | |
| Insulation resistance Note MΩ | | Over 100 | | | | | |
| Surge suppression (as standard) | | Surge absorption transistor | | Varistor | | Varistor | |

Note: Value at 500VDC megger.

Remark: Specification values are based on Koganei test standards.

## Cylinder Operating Speed

### How to obtain cylinder speed

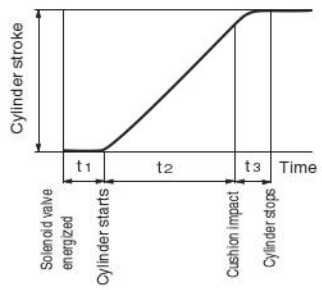


### Measuring conditions

- Air pressure : 0.5 MPa [73 psi.]
- Piping (outer diameter×inner diameter×length) : $\phi$8×$\phi$6×1000 mm [39 in.]
- Fitting : Quick fitting TS8-01
- Load ratio = $\frac{\text{Load}}{\text{Cylinder theoretical thrust}}$ (%)
- Cylinder stroke : 150 mm [5.91 in.]

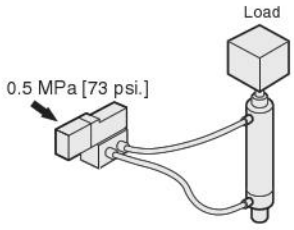


### Maximum operating speed

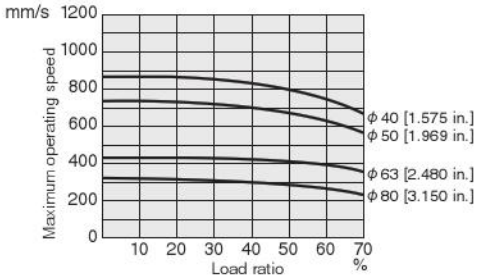


### Delay time

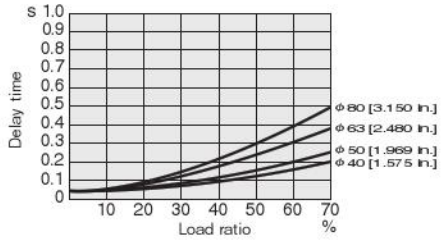


Note: Delay time may vary according to the cylinder stroke.

## Flow Rate

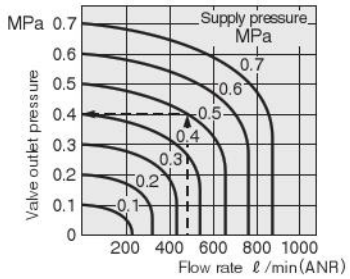


**How to read the graph**

When the supply pressure is 0.5 MPa [73 psi.] and flow rate is 500 ℓ/min [17.7 ft.³/min.] (ANR), the valve outlet pressure becomes 0.4 MPa [58 psi.].

1 mm/s = 0.0394 in./sec.
1 MPa = 145 psi.
1 ℓ/min = 0.0353 ft.³/min.

## Port Size

| | Description/Piping specification | PR | X (P2) | 4 (A), 2 (B) | 1 (P), 3 (R2), 5 (R1), 3, 5 (R) |
|---|---|---|---|---|---|
| | With sub-base | M5×0.8, 10-32UNF | M5×0.8, 10-32UNF | Rc1/8, NPT1/8 | Rc1/8, NPT1/8 |
| Single unit | With female thread block | — | — | Rc1/8, NPT1/8 | Rc1/8, NPT1/8 |
| Single unit | With dual use fitting block | — | — | Dual use fitting for $\phi$6 and $\phi$8 | Rc1/8, NPT1/8 |
| Single unit | With single use fitting block | — | — | $\phi$6 or $\phi$8 | Rc1/8, NPT1/8 |
| Manifold | Monoblock type with female thread block, and PC board type with female thread block | M5×0.8, 10-32UNF | M5×0.8, 10-32UNF | Rc1/8, NPT1/8 | Rc1/4, NPT1/4 |
| Manifold | Monoblock type with fitting block, and PC board type with fitting block | M5×0.8, 10-32UNF | M5×0.8, 10-32UNF | Dual use fitting for $\phi$6 and $\phi$8 | Rc1/4, NPT1/4 |
| Manifold | Monoblock type with single use fitting block, and PC board type with single use fitting block | M5×0.8, 10-32UNF | M5×0.8, 10-32UNF | $\phi$6 or $\phi$8 | Rc1/4, NPT1/4 |
| Manifold | Split type with female thread block, and serial transmission type with female thread block | — | M5×0.8, 10-32UNF | Rc1/8, NPT1/8 | Rc1/4, NPT1/4 |
| Manifold | Split type with fitting block, and serial transmission type with fitting block | — | M5×0.8, 10-32UNF | Dual use fitting for $\phi$6 and $\phi$8 | Dual use fitting for $\phi$8 and $\phi$10 |
| Manifold | Split type with single use fitting block, and serial transmission type with single use fitting block | — | M5×0.8, 10-32UNF | $\phi$6 or $\phi$8 | Single use fitting for $\phi$8 or $\phi$10 |

## Flow Rate Characteristics

### ● When used as a single unit

| Basic model | 1(P)→2(B)/1(P)→4(A) | | 2(B)→3(R2)/4(A)→5(R1) | |
|---|---|---|---|---|
| | Sonic conductance C dm³/(s•bar) | Critical pressure ratio b | Sonic conductance C dm³/(s•bar) | Critical pressure ratio b |
| F15□T0-A2<br>F15□T1-A2<br>F15□T2-A2 | 1.76 | 0.25 | 1.72 | 0.26 |
| F15□T3-A2<br>F15□T4-A2<br>F15□T5-A2 | 1.78 | 0.25 | 1.72 | 0.24 |
| F15□TA-A2<br>F15□TB-A2<br>F15□TC-A2 | 1.53 | 0.26 | 1.61 | 0.23 |
| F15□T0-F3<br>F15□T1-F3<br>F15□T2-F3 | 1.80 | 0.25 | 1.71 | 0.29 |
| F15□T3-F3<br>F15□T4-F3<br>F15□T5-F3 | 1.81 | 0.23 | 1.61 | 0.27 |
| F15□TA-F3<br>F15□TB-F3<br>F15□TC-F3 | 1.57 | 0.28 | 1.57 | 0.24 |
| F15□T0-F4<br>F15□T1-F4<br>F15□T2-F4 | 1.83 | 0.30 | 1.62 | 0.33 |
| F15□T3-F4<br>F15□T4-F4<br>F15□T5-F4 | 1.57 | 0.36 | 1.51 | 0.25 |
| F15□TA-F4<br>F15□TB-F4<br>F15□TC-F4 | 1.54 | 0.31 | 1.55 | 0.27 |

| Basic model | 1(P)→2(B)/1(P)→4(A) | | 2(B)→3(R2)/4(A)→5(R1) | |
|---|---|---|---|---|
| | Sonic conductance C dm³/(s•bar) | Critical pressure ratio b | Sonic conductance C dm³/(s•bar) | Critical pressure ratio b |
| F15□T0-F5<br>F15□T1-F5<br>F15□T2-F5 | 1.62 | 0.38 | 1.56 | 0.28 |
| F15□T3-F5<br>F15□T4-F5<br>F15□T5-F5 | 1.57 | 0.36 | 1.51 | 0.25 |
| F15□TA-F5<br>F15□TB-F5<br>F15□TC-F5 | 1.44 | 0.34 | 1.46 | 0.24 |
| F15□T0-F6<br>F15□T1-F6<br>F15□T2-F6 | 1.86 | 0.30 | 1.70 | 0.30 |
| F15□T3-F6<br>F15□T4-F6<br>F15□T5-F6 | 1.84 | 0.29 | 1.64 | 0.29 |
| F15□TA-F6<br>F15□TB-F6<br>F15□TC-F6 | 1.58 | 0.31 | 1.57 | 0.31 |

### ● When mounted on a manifold

| Valve model \ Manifold model | | F15M□F(FP) | | F15M□A(AP) | | F15M□N(P)(S) | |
|---|---|---|---|---|---|---|---|
| | | 1(P)→2(B)/1(P)→4(A) | 2(B)→3(R2)/4(A)→5(R1) | 1(P)→2(B)/1(P)→4(A) | 2(B)→3(R2)/4(A)→5(R1) | 1(P)→2(B)/1(P)→4(A) | 2(B)→3(R2)/4(A)→5(R1) |
| | | Sonic conductance C dm³/(s•bar) | | Sonic conductance C dm³/(s•bar) | | Sonic conductance C dm³/(s•bar) | |
| F15□T0□<br>F15□T1□<br>F15□T2□ | Outlet port dual use fitting for φ6 and φ8 ※These are the cases of φ8. | 1.72 | 1.56 | 1.56 | 1.46 | 2.01 | 1.84 |
| F15□T3□<br>F15□T4□<br>F15□T5□ | | 1.72 | 1.53 | 1.57 | 1.43 | 2.02 | 1.78 |
| F15□TA□<br>F15□TB□<br>F15□TC□ | | 1.48 | 1.47 | 1.38 | 1.34 | 1.57 | 1.61 |
| F15□T0□<br>F15□T1□<br>F15□T2□ | Outlet port φ6 fitting | 1.50 | 1.46 | 1.38 | 1.39 | 1.67 | 1.70 |
| F15□T3□<br>F15□T4□<br>F15□T5□ | | 1.52 | 1.46 | 1.39 | 1.37 | 1.67 | 1.66 |
| F15□TA□<br>F15□TB□<br>F15□TC□ | | 1.37 | 1.39 | 1.28 | 1.30 | 1.41 | 1.50 |
| F15□T0□<br>F15□T1□<br>F15□T2□ | Outlet port φ8 fitting | 1.73 | 1.56 | 1.60 | 1.47 | 2.05 | 1.83 |
| F15□T3□<br>F15□T4□<br>F15□T5□ | | 1.72 | 1.54 | 1.60 | 1.45 | 2.05 | 1.78 |
| F15□TA□<br>F15□TB□<br>F15□TC□ | | 1.49 | 1.48 | 1.39 | 1.36 | 1.58 | 1.60 |

Notes: 1. When the individual air supply spacer or the individual air exhaust spacer, the back pressure prevention valve, or the stop valve is used, sonic conductance decreases by about 30%.
2: For the flow rate characteristics of other outlet ports, consult us.

Remark: Specification values are based on Koganei test standards.

# Mass

## Single Valve Unit Mass

g [oz.]

| F15□T□□ | F15□T□□-A1 | F15□T□□-A2 | F15□T□□-FJ | F15□T□□-FJ5 | F15□T□□-FJ6 |
|---|---|---|---|---|---|
| Outlet portion<br>None | Outlet portion<br>With plate | Outlet portion<br>With plate | Outlet portion<br>With dual use fitting block | Outlet portion<br>With $\phi$6 fitting block | Outlet portion<br>With $\phi$8 fitting block |
| Inlet portion<br>None | Inlet portion<br>None | Inlet portion<br>With A type sub-base | Inlet portion<br>None | Inlet portion<br>None | Inlet portion<br>None |
| 82 [2.89] | 101 [3.56] | 210 [7.41] | 114 [4.02] | 125 [4.41] | 130 [4.59] |

g [oz.]

| F15□T□□-FM | F15□T□□-F3 | F15□T□□-F4 | F15□T□□-F5 | F15□T□□-F6 |
|---|---|---|---|---|
| Outlet portion<br>With female thread block | Outlet portion<br>With dual use fitting block | Outlet portion<br>With female thread block | Outlet portion<br>With $\phi$6 fitting block | Outlet portion<br>With $\phi$8 fitting block |
| Inlet portion<br>None | Inlet portion<br>With female thread block | Inlet portion<br>With female thread block | Inlet portion<br>With female thread block | Inlet portion<br>With female thread block |
| 104 [3.67] | 127 [4.48] | 117 [4.13] | 138 [4.87] | 143 [5.04] |

Basic Type **F15T0** is 13 g [0.46 oz.] less than the mass shown above.

## Monoblock Manifold Mass (single valve unit included)

g [oz.]

| Monoblock manifold | Mass calculation of each unit | | | |
|---|---|---|---|---|
| | 4(A), 2(B) ports outlet specifications | | | |
| | Female thread block | Dual use fitting block | $\phi$6 fitting block | $\phi$8 fitting block |
| A type | (230×n)+128 [(8.11×n)+4.51] | (240×n)+128 [(8.47×n)+4.51] | (251×n)+128 [(8.85×n)+4.51] | (256×n)+128 [(9.03×n)+4.51] |
| F type | (156×n)+116 [(5.50×n)+4.09] | (166×n)+116 [(5.86×n)+4.09] | (177×n)+116 [(6.24×n)+4.09] | (182×n)+116 [(6.42×n)+4.09] |

g [oz.]

| Monoblock manifold | Additional mass (wire-saving type) | | |
|---|---|---|---|
| | Wiring specification | | |
| | **-F100N, -F101N** | **-F200N, -F201N, -F260N** | **-D250N, -D251N** |
| A type | 340+4n [11.99+0.14n] | 342+4n [12.06+0.14n] | 346+4n [12.20+0.14n] |
| F type | 192+4n [6.77+0.14n] | 194+4n [6.84+0.14n] | 198+4n [6.98+0.14n] |

Calculation example : **F15M8AM**
**stn.1～stn.8 F15T1-A1-PS DC24V**
(230×8)+128=1968 g [69.42 oz.]
When mounting the block-off plate, subtract 100 g [3.53 oz] per unit from the above calculation result.
When mounting the **F15□T0** specification valve, subtract 13 g [0.46 oz.] per unit from the above calculation result.

## PC Board Manifold Mass (single valve unit included)

g [oz.]

| PC board manifold | Mass calculation of each unit | | | | |
|---|---|---|---|---|---|
| | 4(A), 2(B) ports outlet specifications | | | | Circuit board and connector portion |
| | Female thread block | Dual use fitting block | $\phi$6 fitting block | $\phi$8 fitting block | |
| A type | (230×n)+128 [(8.11×n)+4.51] | (240×n)+128 [(8.47×n)+4.51] | (251×n)+128 [(8.85×n)+4.51] | (256×n)+128 [(9.03×n)+4.51] | (2×n)+29<br>[(0.07×n)+1.02] |
| F type | (162×n)+121 [(5.71×n)+4.27] | (172×n)+121 [(6.07×n)+4.27] | (183×n)+121 [(6.46×n)+4.27] | (188×n)+121 [(6.63×n)+4.27] | |

Calculation example : **F15M8APM-F201-W**
**stn.1～stn.8 F15T1-A1-PP DC24V**
(230×8)+128+(2×8)+29=2013 g [71.01 oz.]
When mounting the block-off plate, subtract 100 g [3.53 oz] per unit from the above calculation result.
When mounting the **F15□T0** specification valve, subtract 13 g [0.46 oz.] per unit from the above calculation result.

## Mass of Split Manifold and Serial Transmission Compatible Manifold

Because the valve and manifold have the same output specifications, their mass is the same. The mass can only be changed by choosing a different type of inlet/outlet block.

### Mass of Split Manifold Non-Plug-in Type (single valve unit included)

g [oz.]

| | Mass calculation of each unit | | | |
|---|---|---|---|---|
| | 4(A), 2(B) ports outlet specifications | | | |
| Non-plug-in type | Female thread block | Dual use fitting block | φ6 fitting block | φ8 fitting block |
| | (173×n)+249 [(6.10×n)+8.78] | (183×n)+249 [(6.46×n)+8.78] | (194×n)+249 [(6.84×n)+8.78] | (199×n)+249 [(7.02×n)+8.78] |

g [oz.]

| Additional mass | | | |
|---|---|---|---|
| Piping block specification | | | |
| Female thread block | Dual use fitting block | φ8 fitting block | φ10 fitting block |
| 153 [5.40] | 167 [5.89] | 191 [6.74] | 201 [7.09] |

Calculation example : **F15M8N-MR**
**stn.1～stn.8 F15T1-A1-PS DC24V**
(173×8)+249+153=1786 g [63.00 oz.]
When mounting the block-off plate, subtract 100 g [3.53 oz] per unit from the above calculation result.
When mounting the **F15□T0** specification valve, subtract 13 g [0.46 oz.] per unit from the above calculation result.

### Mass of Split Manifold Plug-in Type/ Serial Transmission Compatible Manifold (single valve unit included)

g [oz.]

| | Mass calculation of each unit | | | |
|---|---|---|---|---|
| | 4(A), 2(B) ports outlet specifications | | | |
| Plug-in type<br>Serial transmission compatible manifold | Female thread block | Dual use fitting block | φ6 fitting block | φ8 fitting block |
| | (177×n)+249 [(6.24×n)+8.78] | (187×n)+249 [(6.60×n)+8.78] | (198×n)+249 [(6.98×n)+8.78] | (203×n)+249 [(7.16×n)+8.78] |

g [oz.]

| Additional mass | | | |
|---|---|---|---|
| Piping block specification | | | |
| Female thread block | Dual use fitting block | φ8 fitting block | φ10 fitting block |
| 153 [5.40] | 167 [5.89] | 191 [6.74] | 201 [7.09] |

g [oz.]

| Additional mass | | | | |
|---|---|---|---|---|
| Wiring block specification | | | | |
| **-F100□□, -F101□□** | **-F200□□, -F201□□, -F260□□** | **-D250□□, -D251□□** | **-D370NU** | **-T200** |
| 32 [1.13] | 34 [1.20] | 39 [1.38] | 72 [2.54] | 158 [5.57] |

g [oz.]

| Additional mass | | | |
|---|---|---|---|
| Serial transmission block specification | | | |
| Stand-alone type | Integrated type | EtherCAT | EtherNet/IP |
| 231 [8.15] | 138 [4.87] | 100 [3.53] | 110 [3.88] |

Calculation example : **F15M8PM-MR-F201 DC24V**
**stn.1～stn.8 F15T1-A1 DC24V**
(177×8)+249+153+34=1852 g [65.33 oz.]
When mounting the block-off plate, subtract 100 g [3.53 oz] per unit from the above calculation result.
When mounting the **F15□T0** specification valve, subtract 13 g [0.46 oz.] per unit from the above calculation result.

## F15T Valve specifications -F3-PS

With outlet port dual use fitting block
With inlet port female thread block
S type plug connector

* For T0 Type dimensions, see page 145.

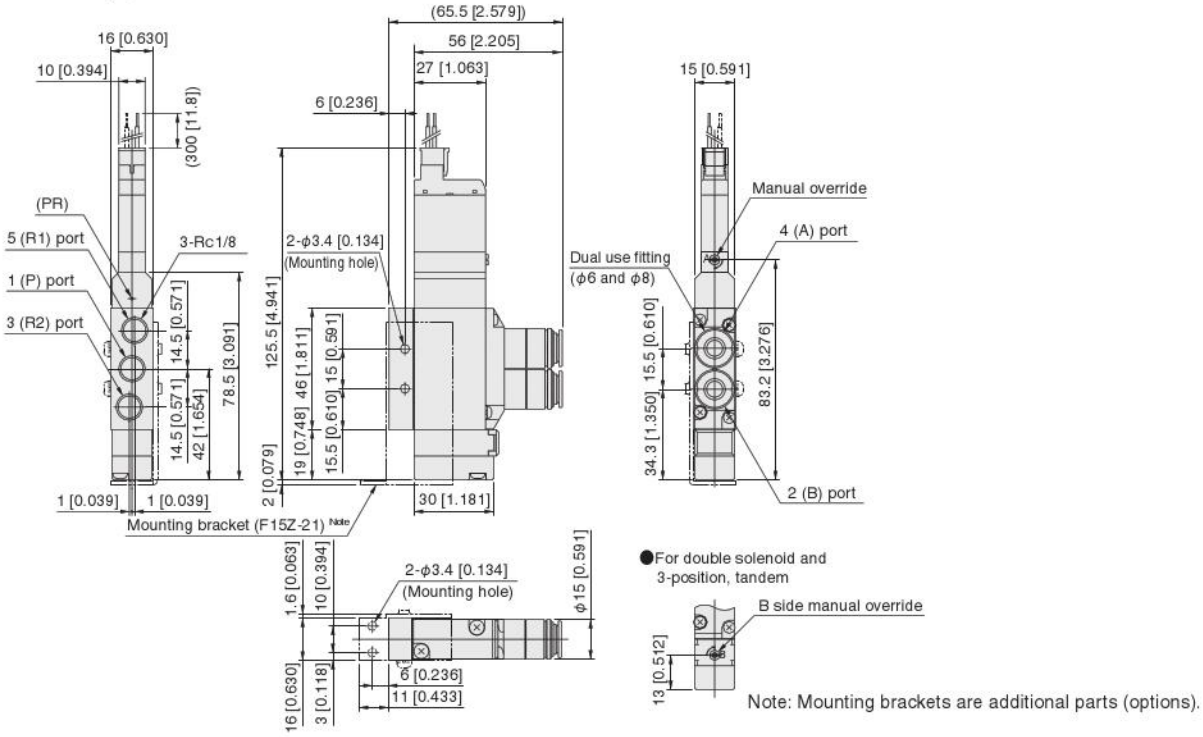


Note: Mounting brackets are additional parts (options).

## F15T Valve specifications -F4-PS
## F15T Valve specifications -F4H-PS

With outlet port female thread block
With inlet port female thread block
S type plug connector

* For T0 Type dimensions, see page 145.

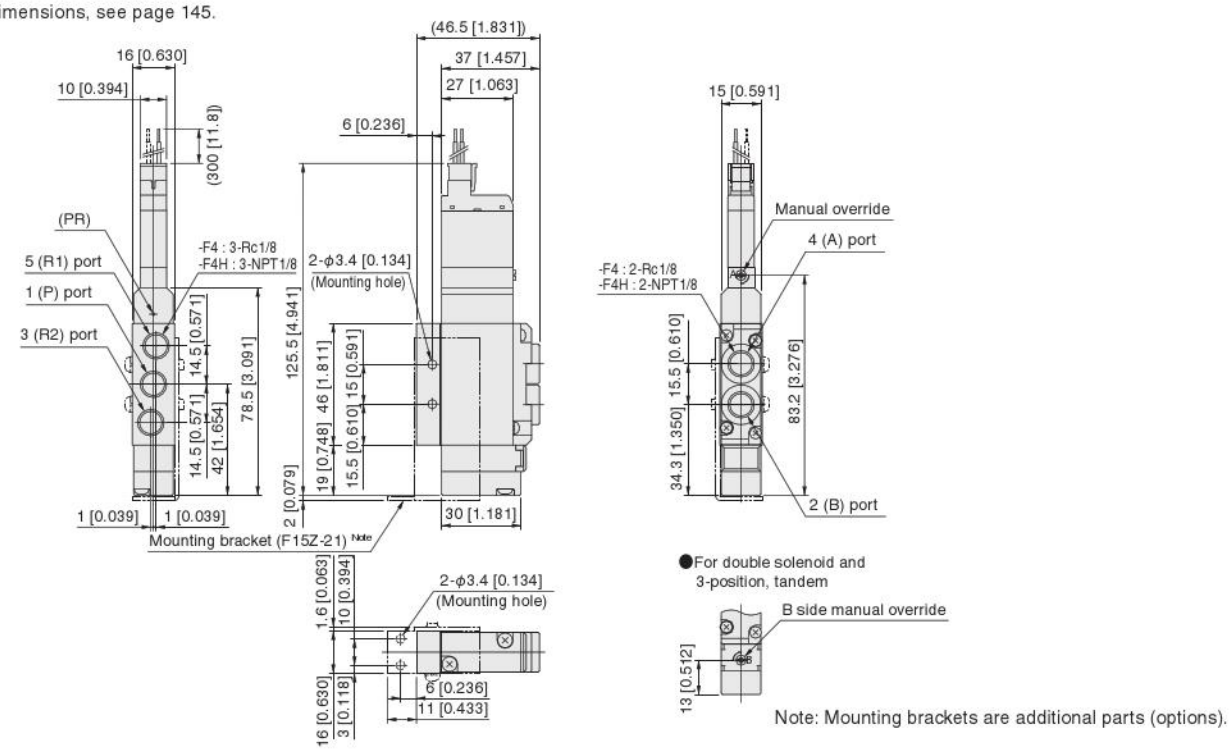


Note: Mounting brackets are additional parts (options).

# F15T0-F □ -PS

With outlet port single use fitting block
With inlet port female thread block
S type plug connector

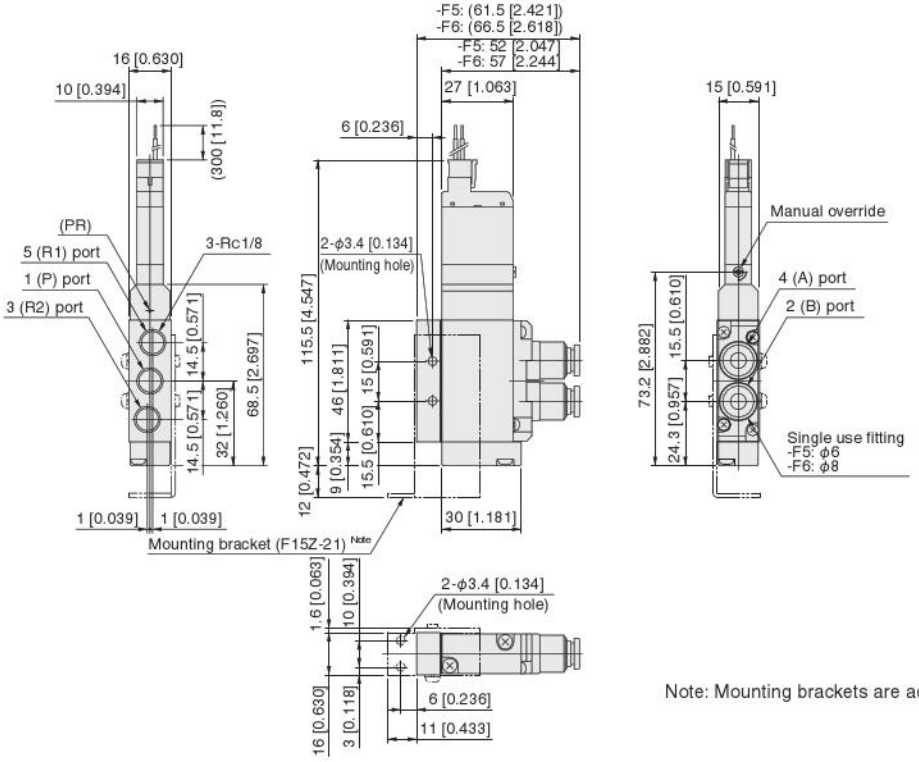


Note: Mounting brackets are additional parts (options).

## F15T Valve specifications Operation system -A2-PS

## F15T Valve specifications Operation system -A2H-PS

With A-type sub-base
S type plug connector

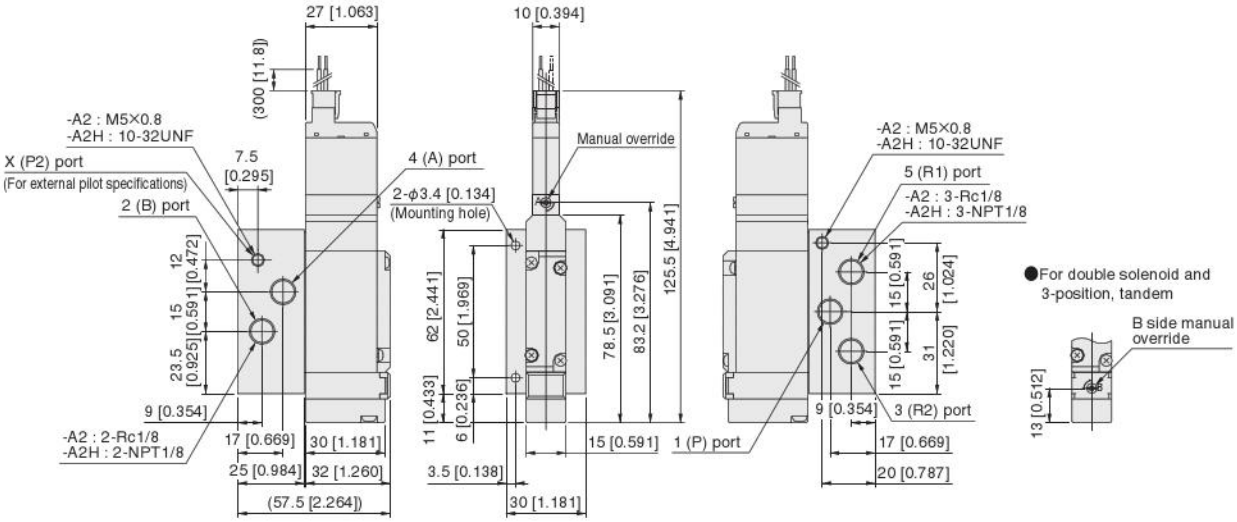


Note: The overall valve length of the T0 type is 10 mm [0.394 in] shorter (end cover side extension is 10 mm [0.394 in] less).

## Options

●L-type plug connector: **-PL**

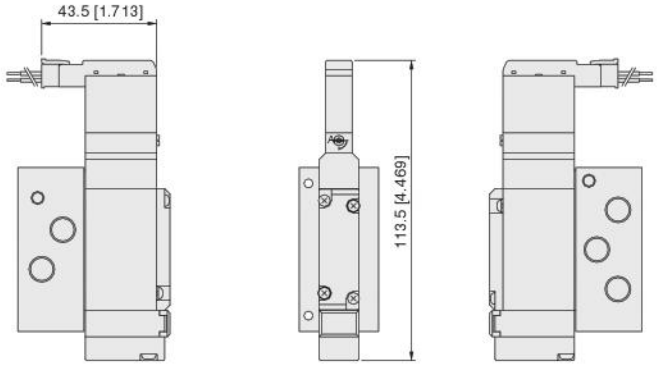


●Manual lever: **-R**

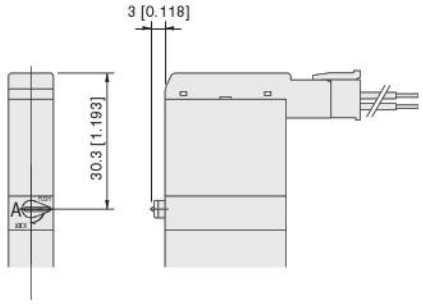


Note: The overall valve length of the T0 type is 10 mm [0.394 in] shorter (end cover side extension is 10 mm [0.394 in] less).

●Solenoid with DIN type connector: **-39□**

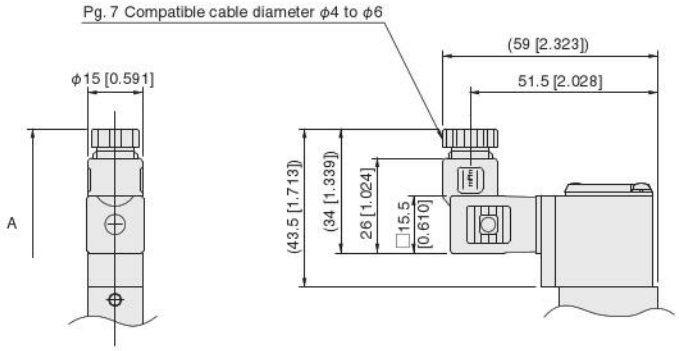


●Protruding lock type manual override: **-83**

| Model \ Symbol | A (Full length) |
|---|---|
| F15T0 | 117.2 [4.614] |
| F15T2 | 170.4 [6.709] |
| F15T3 to T5 | 180.4 [7.102] |

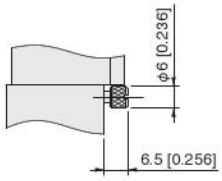

## F15M [Number of valves] A J/M/L [Pilot specifications] (Base piping type)

Monoblock manifold A type
With manifold outlet port dual use fitting block
S type plug connector

### ● Internal pilot specifications

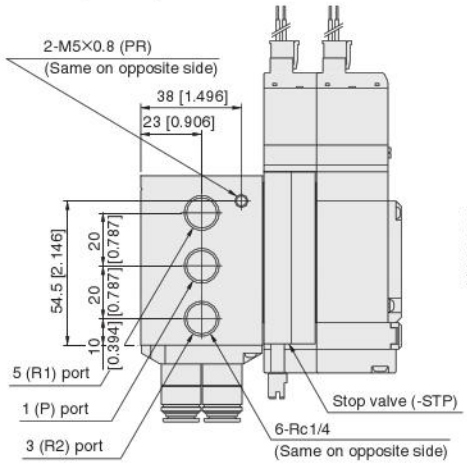


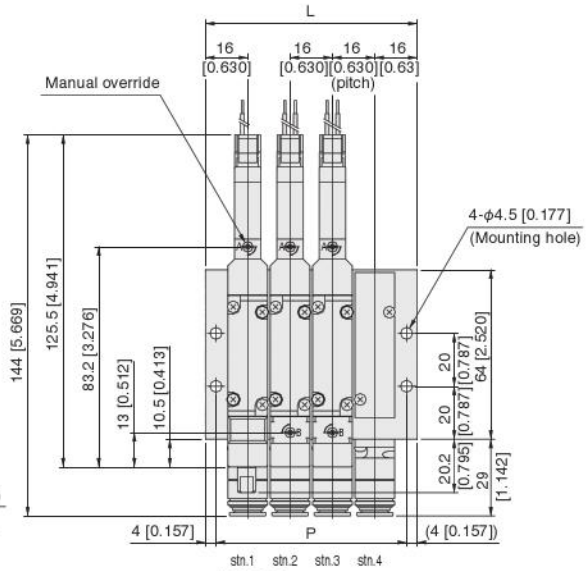


### ● External pilot specifications

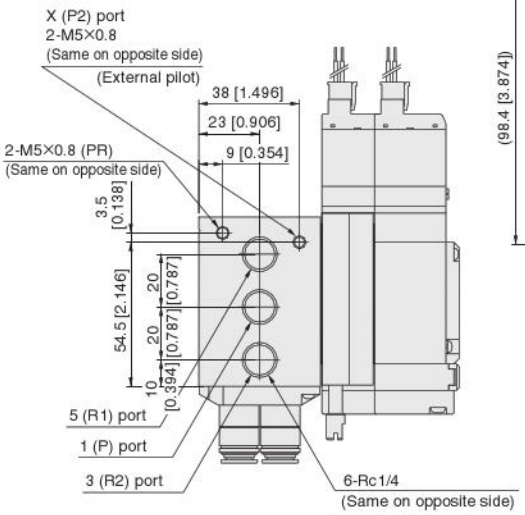


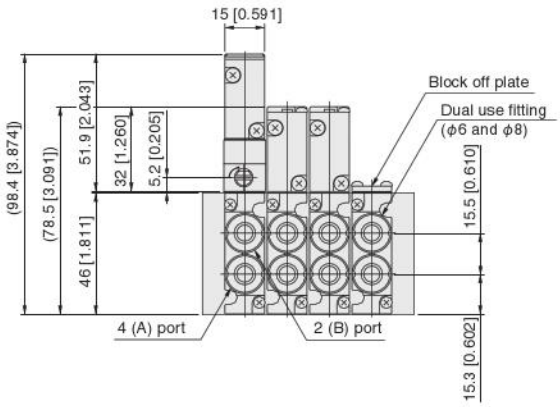


## Unit dimensions

| Number of units | L | P |
|---|---|---|
| 2 | 48 [1.890] | 40 [1.575] |
| 3 | 64 [2.520] | 56 [2.205] |
| 4 | 80 [3.150] | 72 [2.835] |
| 5 | 96 [3.780] | 88 [3.465] |
| 6 | 112 [4.409] | 104 [4.094] |
| 7 | 128 [5.039] | 120 [4.724] |
| 8 | 144 [5.669] | 136 [5.354] |
| 9 | 160 [6.299] | 152 [5.984] |
| 10 | 176 [6.929] | 168 [6.614] |
| 11 | 192 [7.559] | 184 [7.244] |
| 12 | 208 [8.189] | 200 [7.874] |
| 13 | 224 [8.819] | 216 [8.504] |
| 14 | 240 [9.449] | 232 [9.134] |
| 15 | 256 [10.079] | 248 [9.764] |
| 16 | 272 [10.709] | 264 [10.394] |
| 17 | 288 [11.339] | 280 [11.024] |
| 18 | 304 [11.969] | 296 [11.654] |
| 19 | 320 [12.598] | 312 [12.283] |
| 20 | 336 [13.228] | 328 [12.913] |

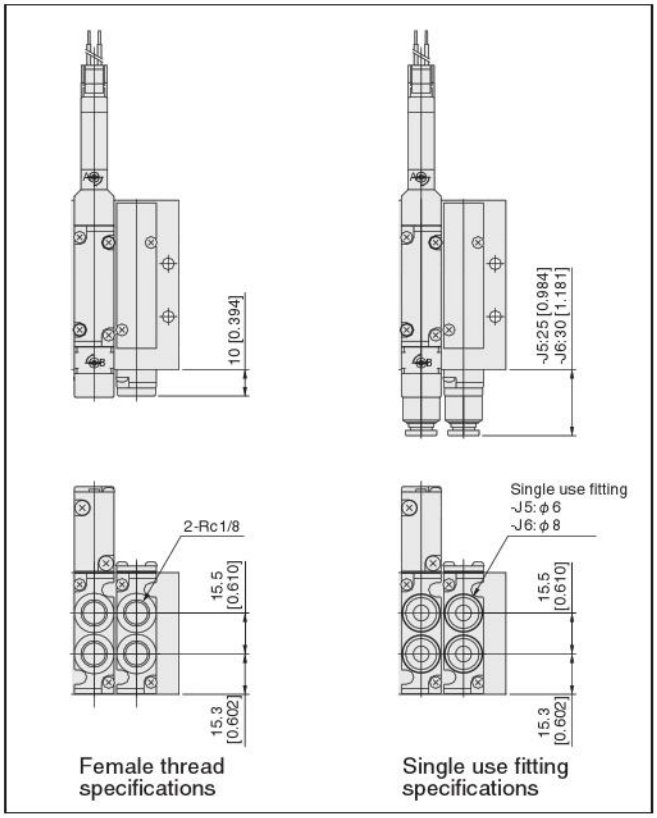

# F15M Number of valves AHL Pilot specifications (Base piping type)

Monoblock manifold A type
With manifold outlet port female thread block
S type plug connector

## ● Internal pilot specifications

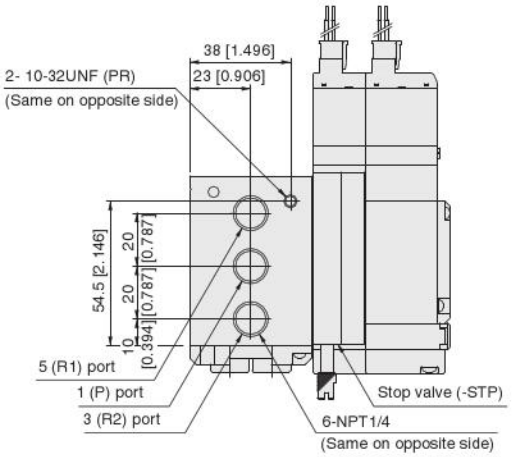


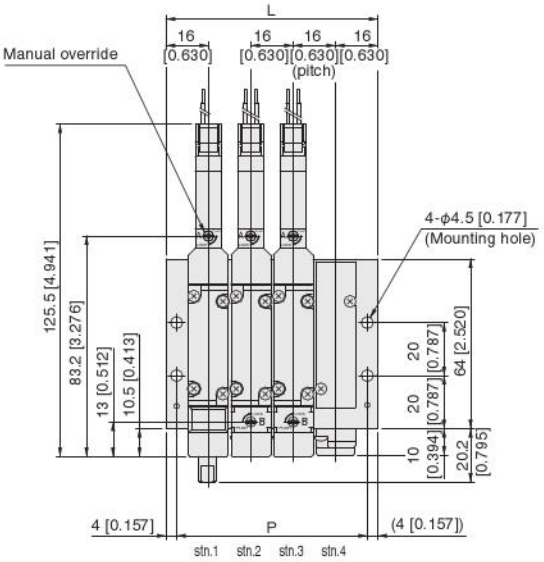


## ● External pilot specifications

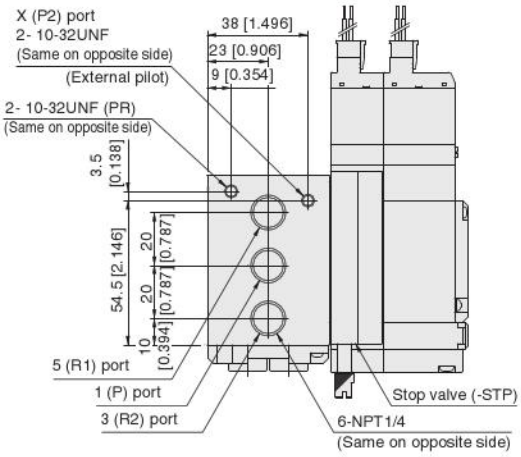


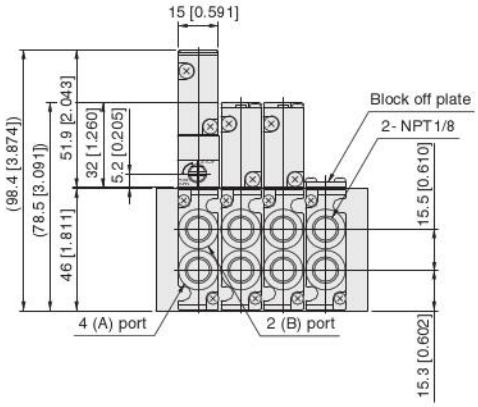


## Unit dimensions

| Number of units | L | P |
|---|---|---|
| 2 | 48 [1.890] | 40 [1.575] |
| 3 | 64 [2.520] | 56 [2.205] |
| 4 | 80 [3.150] | 72 [2.835] |
| 5 | 96 [3.780] | 88 [3.465] |
| 6 | 112 [4.409] | 104 [4.094] |
| 7 | 128 [5.039] | 120 [4.724] |
| 8 | 144 [5.669] | 136 [5.354] |
| 9 | 160 [6.299] | 152 [5.984] |
| 10 | 176 [6.929] | 168 [6.614] |
| 11 | 192 [7.559] | 184 [7.244] |
| 12 | 208 [8.189] | 200 [7.874] |
| 13 | 224 [8.819] | 216 [8.504] |
| 14 | 240 [9.449] | 232 [9.134] |
| 15 | 256 [10.079] | 248 [9.764] |
| 16 | 272 [10.709] | 264 [10.394] |
| 17 | 288 [11.339] | 280 [11.024] |
| 18 | 304 [11.969] | 296 [11.654] |
| 19 | 320 [12.598] | 312 [12.283] |
| 20 | 336 [13.228] | 328 [12.913] |

## F15M Number of valves F (Direct piping type)

Monoblock manifold F type
With valve outlet port dual use fitting block
S type plug connector

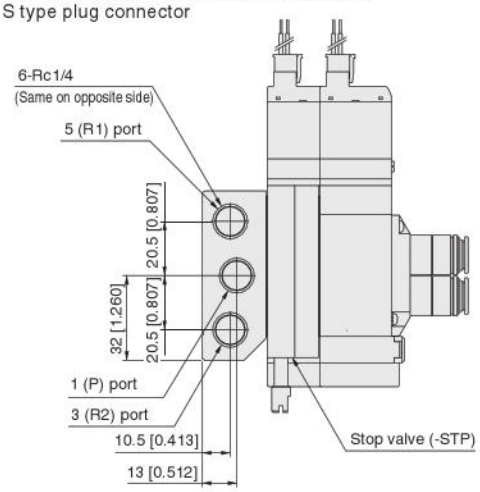


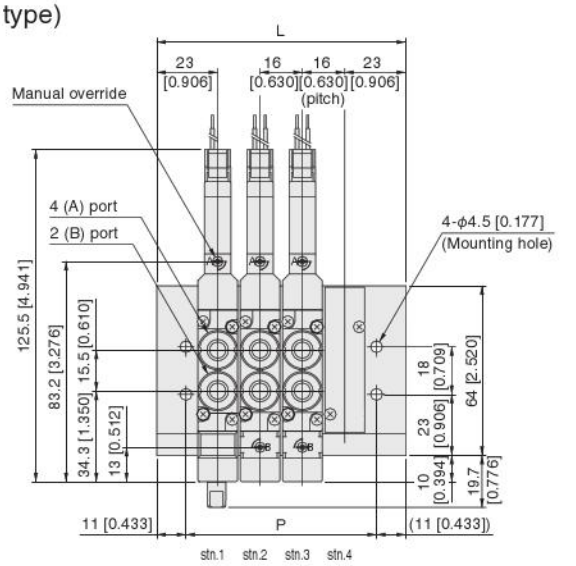


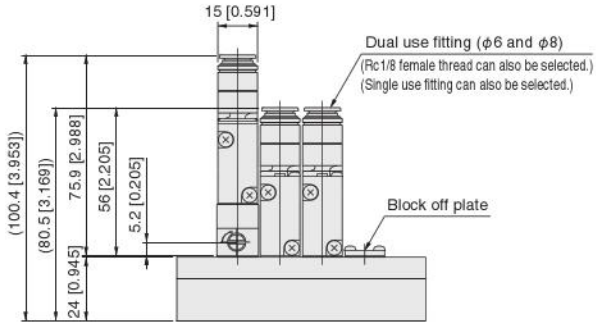


Note: The overall valve length of the T0 type is 10 mm [0.394 in] shorter (end cover side protrusion is 10 mm [0.394 in] less).

### Unit dimensions

| Number of units | L | P |
|---|---|---|
| 2 | 62 [2.441] | 40 [1.575] |
| 3 | 78 [3.071] | 56 [2.205] |
| 4 | 94 [3.701] | 72 [2.835] |
| 5 | 110 [4.331] | 88 [3.465] |
| 6 | 126 [4.961] | 104 [4.094] |
| 7 | 142 [5.591] | 120 [4.724] |
| 8 | 158 [6.220] | 136 [5.354] |
| 9 | 174 [6.850] | 152 [5.984] |
| 10 | 190 [7.480] | 168 [6.614] |
| 11 | 206 [8.110] | 184 [7.244] |
| 12 | 222 [8.740] | 200 [7.874] |
| 13 | 238 [9.370] | 216 [8.504] |
| 14 | 254 [10.000] | 232 [9.134] |
| 15 | 270 [10.630] | 248 [9.764] |
| 16 | 286 [11.260] | 264 [10.394] |
| 17 | 302 [11.890] | 280 [11.024] |
| 18 | 318 [12.520] | 296 [11.654] |
| 19 | 334 [13.150] | 312 [12.283] |
| 20 | 350 [13.780] | 328 [12.913] |

## F15M Number of valves FH (Direct piping type)

Monoblock manifold F type
With valve outlet port female thread block
S type plug connector

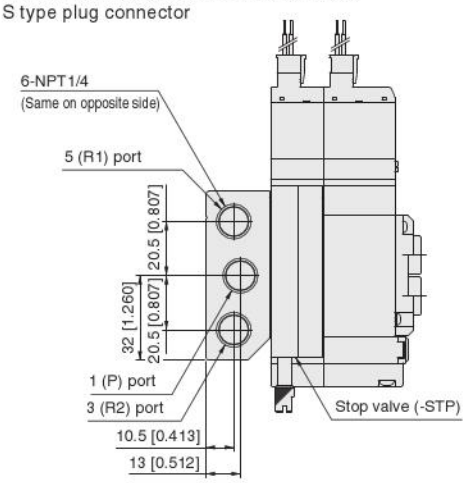


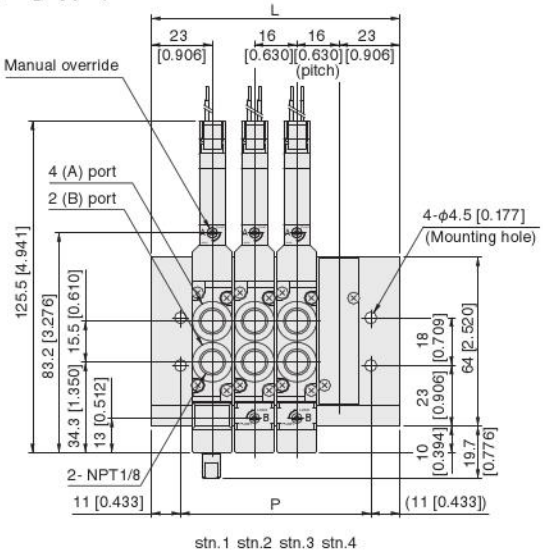


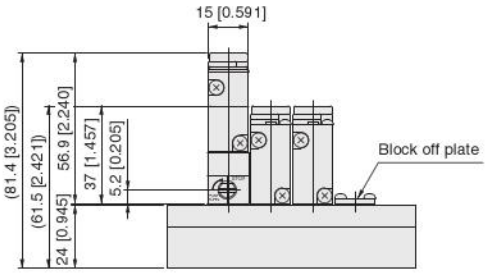


Note: The overall valve length of the T0 type is 10 mm [0.394 in] shorter (end cover side protrusion is 10 mm [0.394 in] less).

### Unit dimensions

| Number of units | L | P |
|---|---|---|
| 2 | 62 [2.441] | 40 [1.575] |
| 3 | 78 [3.071] | 56 [2.205] |
| 4 | 94 [3.701] | 72 [2.835] |
| 5 | 110 [4.331] | 88 [3.465] |
| 6 | 126 [4.961] | 104 [4.094] |
| 7 | 142 [5.591] | 120 [4.724] |
| 8 | 158 [6.220] | 136 [5.354] |
| 9 | 174 [6.850] | 152 [5.984] |
| 10 | 190 [7.480] | 168 [6.614] |
| 11 | 206 [8.110] | 184 [7.244] |
| 12 | 222 [8.740] | 200 [7.874] |
| 13 | 238 [9.370] | 216 [8.504] |
| 14 | 254 [10.000] | 232 [9.134] |
| 15 | 270 [10.630] | 248 [9.764] |
| 16 | 286 [11.260] | 264 [10.394] |
| 17 | 302 [11.890] | 280 [11.024] |
| 18 | 318 [12.520] | 296 [11.654] |
| 19 | 334 [13.150] | 312 [12.283] |
| 20 | 350 [13.780] | 328 [12.913] |

## F15M [Number of valves] A J/M/L [Pilot specifications] (Base piping type)

Monoblock manifold A type, wire saving type
With manifold outlet port dual use fitting block
Dimensions show flat cable connector 20-pin specifications

### ● Internal pilot specifications

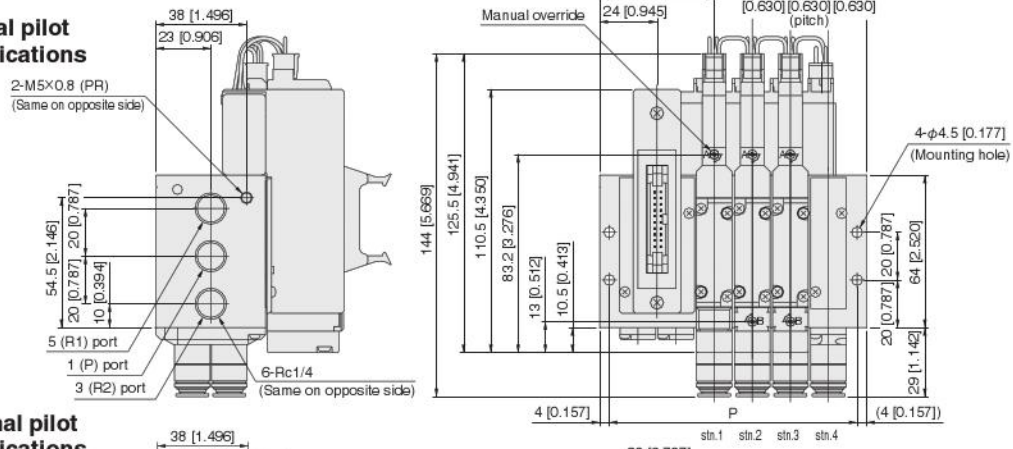


### ● External pilot specifications

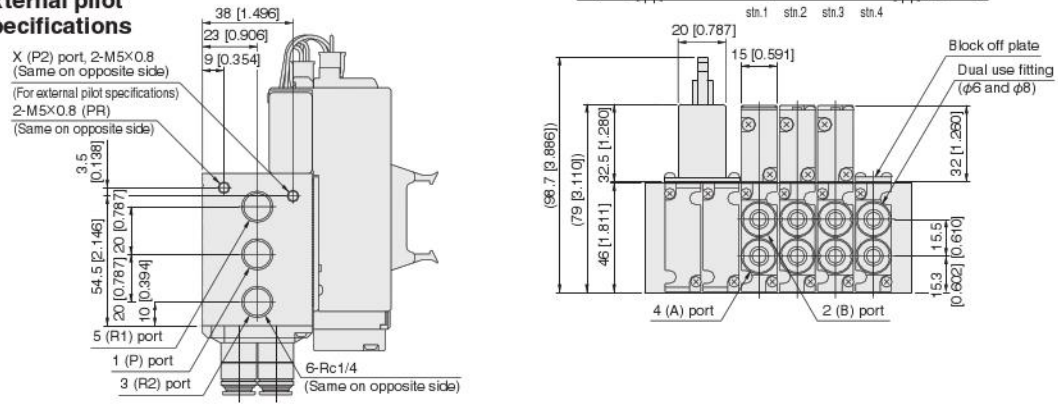


### Unit dimensions

| Number of units | L | P |
|---|---|---|
| 2 | 80 [3.150] | 72 [2.835] |
| 3 | 96 [3.780] | 88 [3.465] |
| 4 | 112 [4.409] | 104 [4.094] |
| 5 | 128 [5.039] | 120 [4.724] |
| 6 | 144 [5.669] | 136 [5.354] |
| 7 | 160 [6.299] | 152 [5.984] |
| 8 | 176 [6.929] | 168 [6.614] |
| 9 | 192 [7.559] | 184 [7.244] |
| 10 | 208 [8.189] | 200 [7.874] |
| 11 | 224 [8.819] | 216 [8.504] |
| 12 | 240 [9.449] | 232 [9.134] |
| 13 | 256 [10.079] | 248 [9.764] |
| 14 | 272 [10.709] | 264 [10.394] |
| 15 | 288 [11.339] | 280 [11.024] |
| 16 | 304 [11.969] | 296 [11.654] |
| 17 | 320 [12.598] | 312 [12.283] |
| 18 | 336 [13.228] | 328 [12.913] |
| 19 | 352 [13.858] | 344 [13.543] |
| 20 | 368 [14.488] | 360 [14.173] |

## F15M [Number of valves] AHL [Pilot specifications] (Base piping type)

Monoblock manifold A type, wire saving type
With manifold outlet port female thread block
Dimensions show flat cable connector 20-pin specifications

### ● Internal pilot specifications

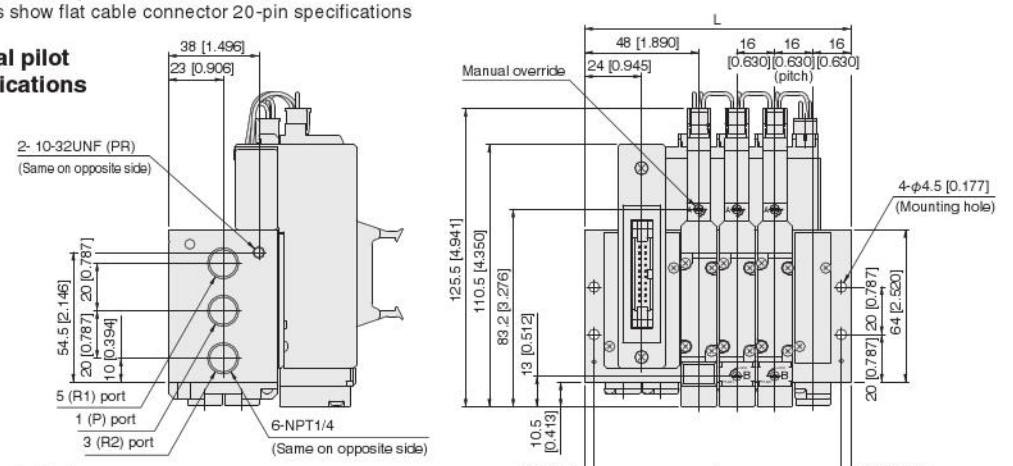


### ● External pilot specifications

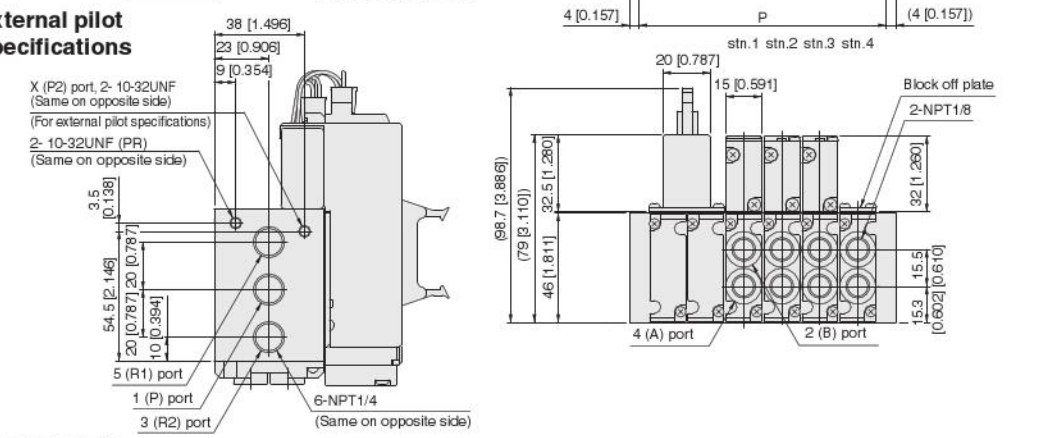


### Unit dimensions

| Number of units | L | P |
|---|---|---|
| 2 | 80 [3.150] | 72 [2.835] |
| 3 | 96 [3.780] | 88 [3.465] |
| 4 | 112 [4.409] | 104 [4.094] |
| 5 | 128 [5.039] | 120 [4.724] |
| 6 | 144 [5.669] | 136 [5.354] |
| 7 | 160 [6.299] | 152 [5.984] |
| 8 | 176 [6.929] | 168 [6.614] |
| 9 | 192 [7.559] | 184 [7.244] |
| 10 | 208 [8.189] | 200 [7.874] |
| 11 | 224 [8.819] | 216 [8.504] |
| 12 | 240 [9.449] | 232 [9.134] |
| 13 | 256 [10.079] | 248 [9.764] |
| 14 | 272 [10.709] | 264 [10.394] |
| 15 | 288 [11.339] | 280 [11.024] |
| 16 | 304 [11.969] | 296 [11.654] |
| 17 | 320 [12.598] | 312 [12.283] |
| 18 | 336 [13.228] | 328 [12.913] |
| 19 | 352 [13.858] | 344 [13.543] |
| 20 | 368 [14.488] | 360 [14.173] |

## F15M Number of valves F (Direct piping type)

Monoblock manifold F type, wire saving type
With valve outlet port dual use fitting block
Dimensions show flat cable connector 20-pin specifications

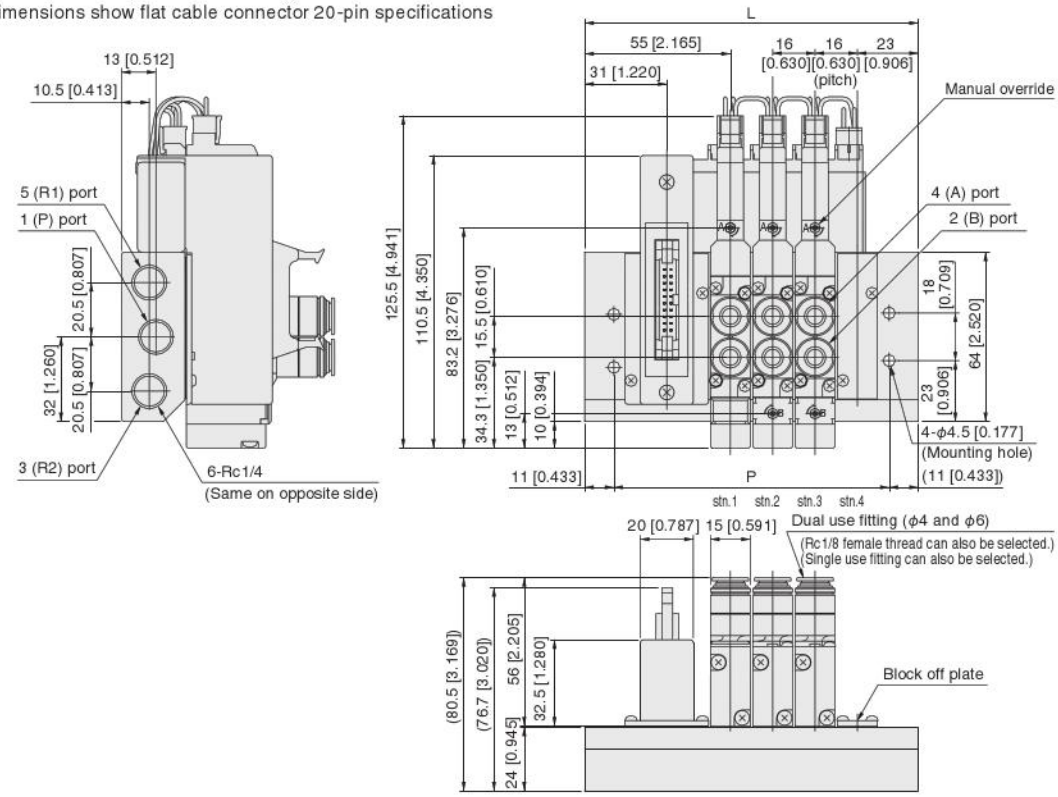


### Unit dimensions

| Number of units | L | P |
|---|---|---|
| 2 | 94 [3.701] | 72 [2.835] |
| 3 | 110 [4.331] | 88 [3.465] |
| 4 | 126 [4.961] | 104 [4.094] |
| 5 | 142 [5.591] | 120 [4.724] |
| 6 | 158 [6.220] | 136 [5.354] |
| 7 | 174 [6.850] | 152 [5.984] |
| 8 | 190 [7.480] | 168 [6.614] |
| 9 | 206 [8.110] | 184 [7.244] |
| 10 | 222 [8.740] | 200 [7.874] |
| 11 | 238 [9.370] | 216 [8.504] |
| 12 | 254 [10.000] | 232 [9.134] |
| 13 | 270 [10.630] | 248 [9.764] |
| 14 | 286 [11.260] | 264 [10.394] |
| 15 | 302 [11.890] | 280 [11.024] |
| 16 | 318 [12.520] | 296 [11.654] |
| 17 | 334 [13.150] | 312 [12.283] |
| 18 | 350 [13.780] | 328 [12.913] |
| 19 | 366 [14.409] | 344 [13.543] |
| 20 | 382 [15.039] | 360 [14.173] |

## F15M Number of valves FH (Direct piping type)

Monoblock manifold F type, wire saving type
With valve outlet port female thread block
Dimensions show flat cable connector 20-pin specifications

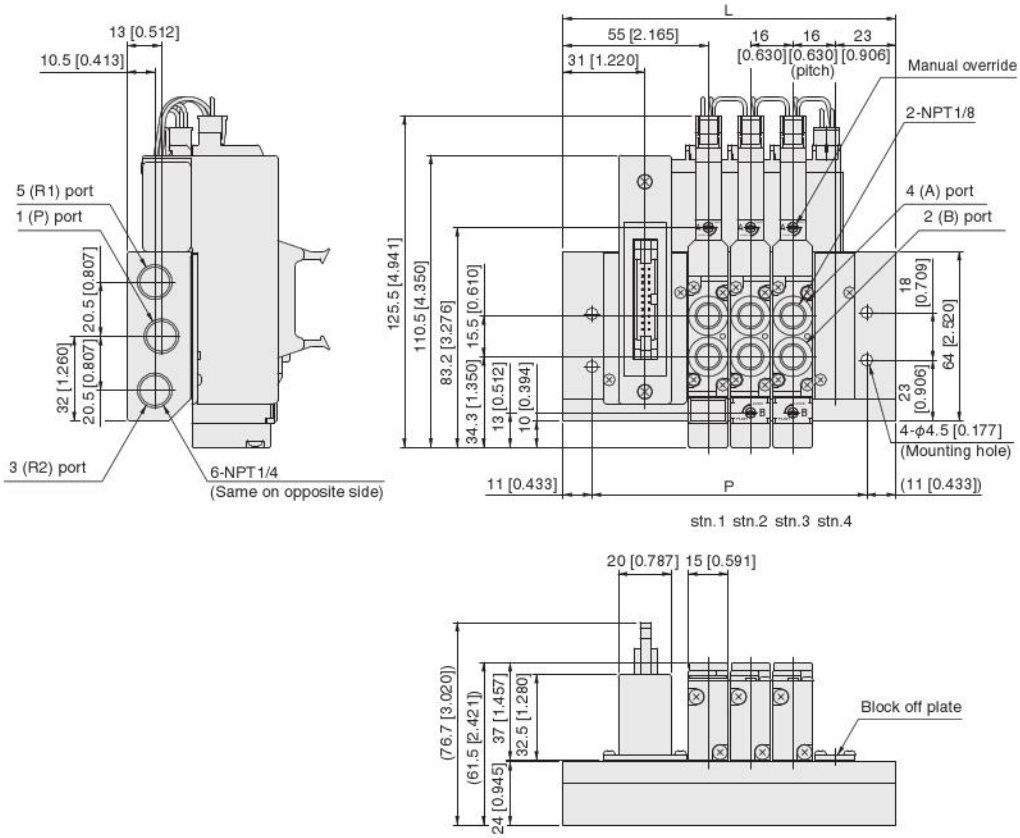


### Unit dimensions

| Number of units | L | P |
|---|---|---|
| 2 | 94 [3.701] | 72 [2.835] |
| 3 | 110 [4.331] | 88 [3.465] |
| 4 | 126 [4.961] | 104 [4.094] |
| 5 | 142 [5.591] | 120 [4.724] |
| 6 | 158 [6.220] | 136 [5.354] |
| 7 | 174 [6.850] | 152 [5.984] |
| 8 | 190 [7.480] | 168 [6.614] |
| 9 | 206 [8.110] | 184 [7.244] |
| 10 | 222 [8.740] | 200 [7.874] |
| 11 | 238 [9.370] | 216 [8.504] |
| 12 | 254 [10.000] | 232 [9.134] |
| 13 | 270 [10.630] | 248 [9.764] |
| 14 | 286 [11.260] | 264 [10.394] |
| 15 | 302 [11.890] | 280 [11.024] |
| 16 | 318 [12.520] | 296 [11.654] |
| 17 | 334 [13.150] | 312 [12.283] |
| 18 | 350 [13.780] | 328 [12.913] |
| 19 | 366 [14.409] | 344 [13.543] |
| 20 | 382 [15.039] | 360 [14.173] |

## F15M [Number of valves] AP J/M/L [Pilot specifications] (Base piping type)

PC board manifold A type
With manifold outlet port dual use fitting block

Note: Mounted valve example shows -W wiring specifications.
In the case of -S wiring specifications, the mounted valve becomes T0 or T1 type.

### ● Internal pilot specifications

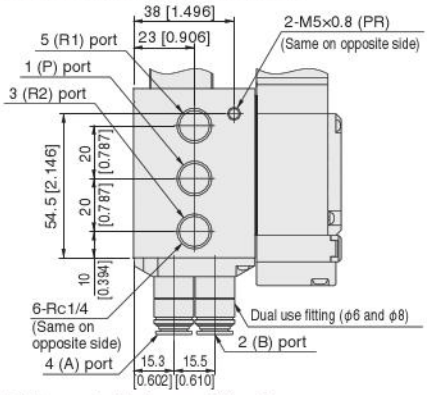


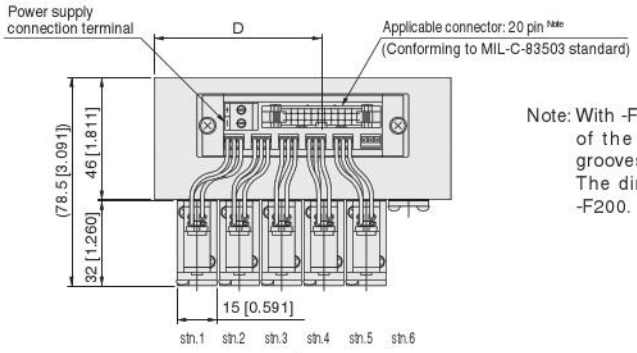


Note: With -F200 and -F201, the positions of the mis-insertion prevention grooves are reversed.
The dimentions show the case of -F200.

### ● External pilot specifications

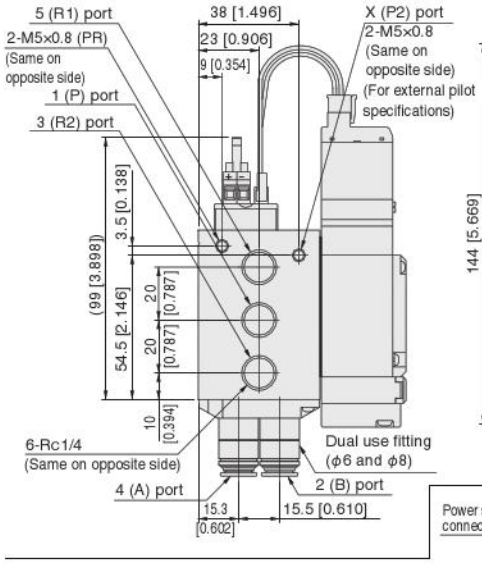


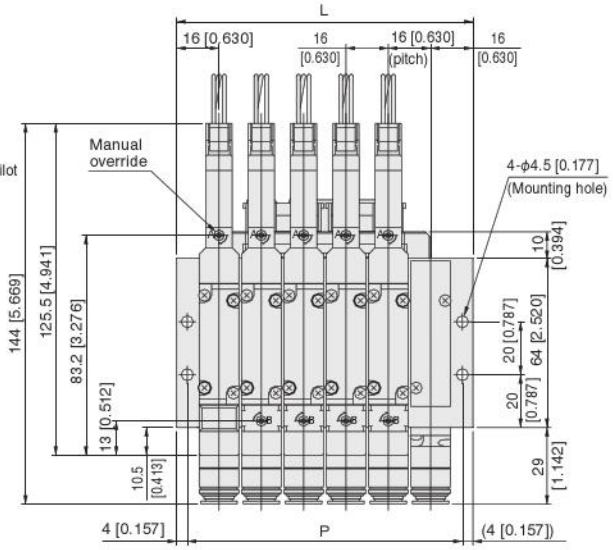


### Unit dimensions

| Number of units | L | P | D |
|---|---|---|---|
| 6 | 112 [4.409] | 104 [4.094] | 63 [2.480] |
| 8 | 144 [5.669] | 136 [5.354] | 68.5 [2.697] |
| 10 | 176 [6.929] | 168 [6.614] | 68.5 [2.697] |
| 12 | 208 [8.189] | 200 [7.874] | 79.5 [3.130] |
| 14 | 240 [9.449] | 232 [9.134] | 90 [3.543] |
| 16 | 272 [10.709] | 264 [10.394] | 90 [3.543] |

Note: Wiring specifications
For -S: 6, 8, 10, 12, 14, 16 units
For -W: Only 6 and 8 units selectable

## F15M [Number of valves] FP

(Direct piping type)

PC board manifold F type
With valve outlet port dual use fitting block

Note: Mounted valve example shows -W wiring specifications.
In the case of -S wiring specifications, the mounted valve becomes T0 or T1 type.

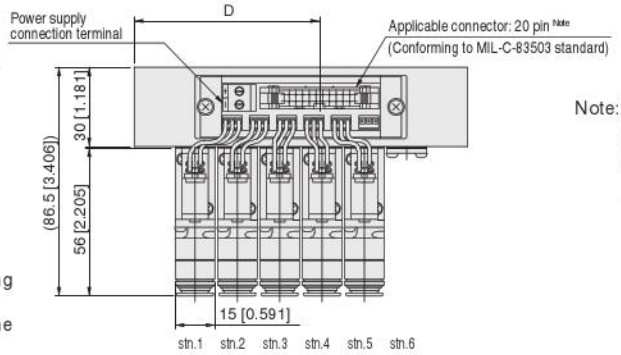


Note: With -F200 and -F201, the positions of the mis-insertion prevention grooves are reversed.
The dimentions show the case of -F200.

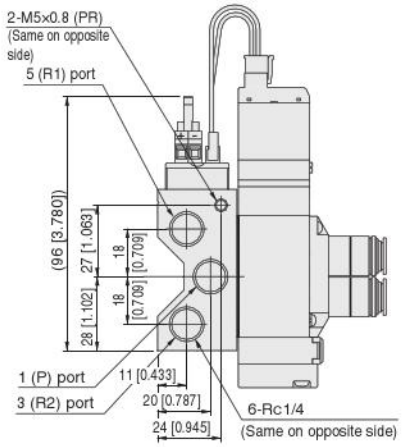


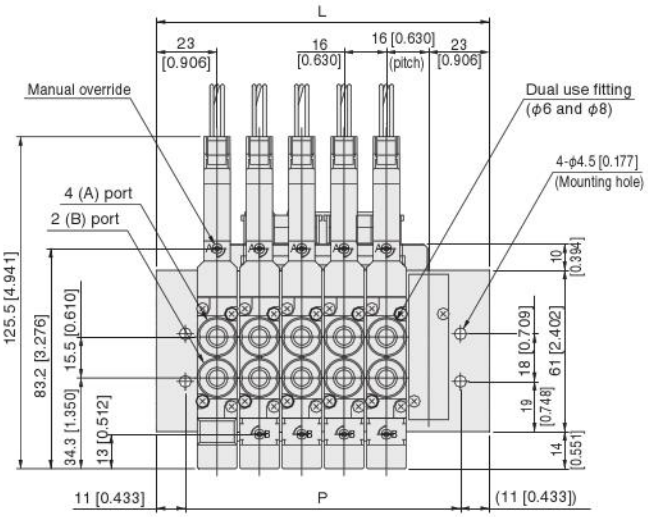


### Unit dimensions

| Number of units | L | P | D |
|---|---|---|---|
| 6 | 126 [4.961] | 104 [4.094] | 70 [2.756] |
| 8 | 158 [6.220] | 136 [5.354] | 75.5 [2.972] |
| 10 | 190 [7.480] | 168 [6.614] | 75.5 [2.972] |
| 12 | 222 [8.740] | 200 [7.874] | 86.5 [3.406] |
| 14 | 254 [10.000] | 232 [9.134] | 92 [3.622] |
| 16 | 286 [11.260] | 264 [10.394] | 92 [3.622] |

Note: Wiring specifications
For -S: 6, 8, 10, 12, 14, 16 units
For -W: Only 6 and 8 units selectable

Note: The overall valve length of the T0 type is 10 mm [0.394 in] shorter (end cover side protrusion is 10 mm [0.394 in] less).

## F15M Number of valves N J/M/L Pilot specifications (Base piping type)

With manifold outlet port dual use fitting block
S type plug connector

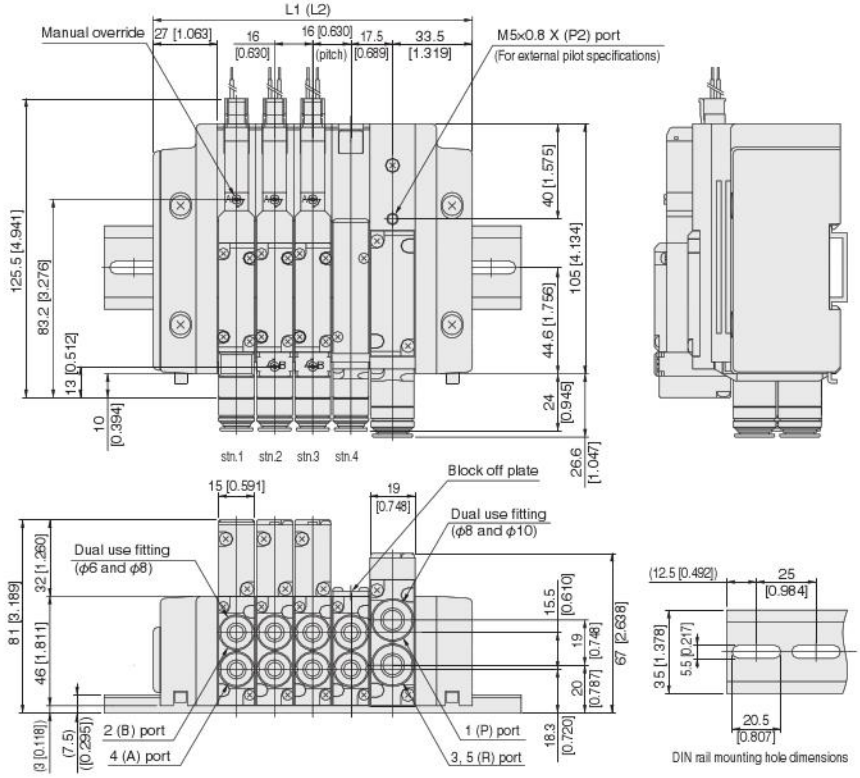


### Unit dimensions

| Number of units | L1 | Length of DIN rail | L2 Note | Length of DIN rail Note |
|---|---|---|---|---|
| 2 | 102 [4.016] | 150 [5.906] | 121 [4.764] | 150 [5.906] |
| 3 | 118 [4.646] | 150 [5.906] | 137 [5.394] | 175 [6.890] |
| 4 | 134 [5.276] | 175 [6.890] | 153 [6.024] | 200 [7.874] |
| 5 | 150 [5.906] | 175 [6.890] | 169 [6.654] | 200 [7.874] |
| 6 | 166 [6.535] | 200 [7.874] | 185 [7.283] | 225 [8.858] |
| 7 | 182 [7.165] | 225 [8.858] | 201 [7.913] | 250 [9.843] |
| 8 | 198 [7.795] | 225 [8.858] | 217 [8.543] | 250 [9.843] |
| 9 | 214 [8.425] | 250 [9.843] | 233 [9.173] | 275 [10.827] |
| 10 | 230 [9.055] | 275 [10.827] | 249 [9.803] | 275 [10.827] |
| 11 | 246 [9.685] | 275 [10.827] | 265 [10.433] | 300 [11.811] |
| 12 | 262 [10.315] | 300 [11.811] | 281 [11.063] | 325 [12.795] |
| 13 | 278 [10.945] | 325 [12.795] | 297 [11.693] | 325 [12.795] |
| 14 | 294 [11.575] | 325 [12.795] | 313 [12.323] | 350 [13.780] |
| 15 | 310 [12.205] | 350 [13.780] | 329 [12.953] | 375 [14.764] |
| 16 | 326 [12.835] | 375 [14.764] | 345 [13.583] | 375 [14.764] |
| 17 | 342 [13.465] | 375 [14.764] | 361 [14.213] | 400 [15.748] |
| 18 | 358 [14.094] | 400 [15.748] | 377 [14.843] | 425 [16.732] |
| 19 | 374 [14.724] | 400 [15.748] | 393 [15.472] | 425 [16.732] |
| 20 | 390 [15.354] | 425 [16.732] | 409 [16.102] | 450 [17.717] |

Note: When two piping blocks are used.

## F15M Number of valves N Pilot specifications (Direct piping type)

With valve outlet port dual use fitting block
S type plug connector

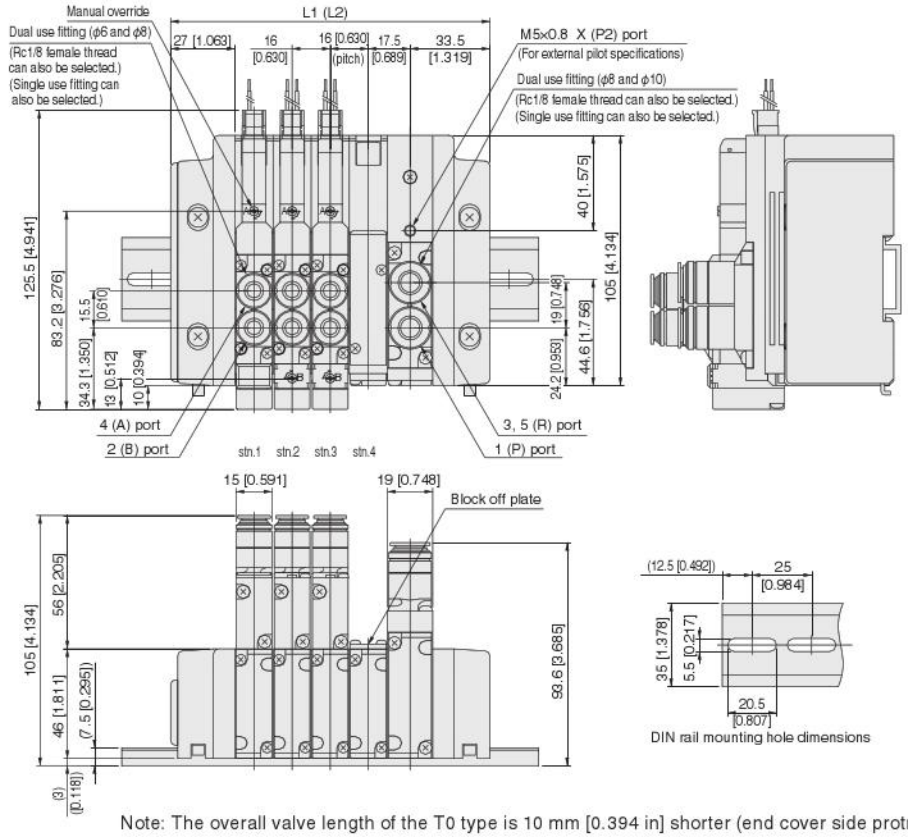


### Unit dimensions

| Number of units | L1 | Length of DIN rail | L2 Note | Length of DIN rail Note |
|---|---|---|---|---|
| 2 | 102 [4.016] | 150 [5.906] | 121 [4.764] | 150 [5.906] |
| 3 | 118 [4.646] | 150 [5.906] | 137 [5.394] | 175 [6.890] |
| 4 | 134 [5.276] | 175 [6.890] | 153 [6.024] | 200 [7.874] |
| 5 | 150 [5.906] | 175 [6.890] | 169 [6.654] | 200 [7.874] |
| 6 | 166 [6.535] | 200 [7.874] | 185 [7.283] | 225 [8.858] |
| 7 | 182 [7.165] | 225 [8.858] | 201 [7.913] | 250 [9.843] |
| 8 | 198 [7.795] | 225 [8.858] | 217 [8.543] | 250 [9.843] |
| 9 | 214 [8.425] | 250 [9.843] | 233 [9.173] | 275 [10.827] |
| 10 | 230 [9.055] | 275 [10.827] | 249 [9.803] | 275 [10.827] |
| 11 | 246 [9.685] | 275 [10.827] | 265 [10.433] | 300 [11.811] |
| 12 | 262 [10.315] | 300 [11.811] | 281 [11.063] | 325 [12.795] |
| 13 | 278 [10.945] | 325 [12.795] | 297 [11.693] | 325 [12.795] |
| 14 | 294 [11.575] | 325 [12.795] | 313 [12.323] | 350 [13.780] |
| 15 | 310 [12.205] | 350 [13.780] | 329 [12.953] | 375 [14.764] |
| 16 | 326 [12.835] | 375 [14.764] | 345 [13.583] | 375 [14.764] |
| 17 | 342 [13.465] | 375 [14.764] | 361 [14.213] | 400 [15.748] |
| 18 | 358 [14.094] | 400 [15.748] | 377 [14.843] | 425 [16.732] |
| 19 | 374 [14.724] | 400 [15.748] | 393 [15.472] | 425 [16.732] |
| 20 | 390 [15.354] | 425 [16.732] | 409 [16.102] | 450 [17.717] |

Note: When two piping blocks are used.

Note: The overall valve length of the T0 type is 10 mm [0.394 in] shorter (end cover side protrusion is 10 mm [0.394 in] less).

## F15M Number of valves NHL Pilot specifications (Base piping type)

With manifold outlet port female thread block
S type plug connector

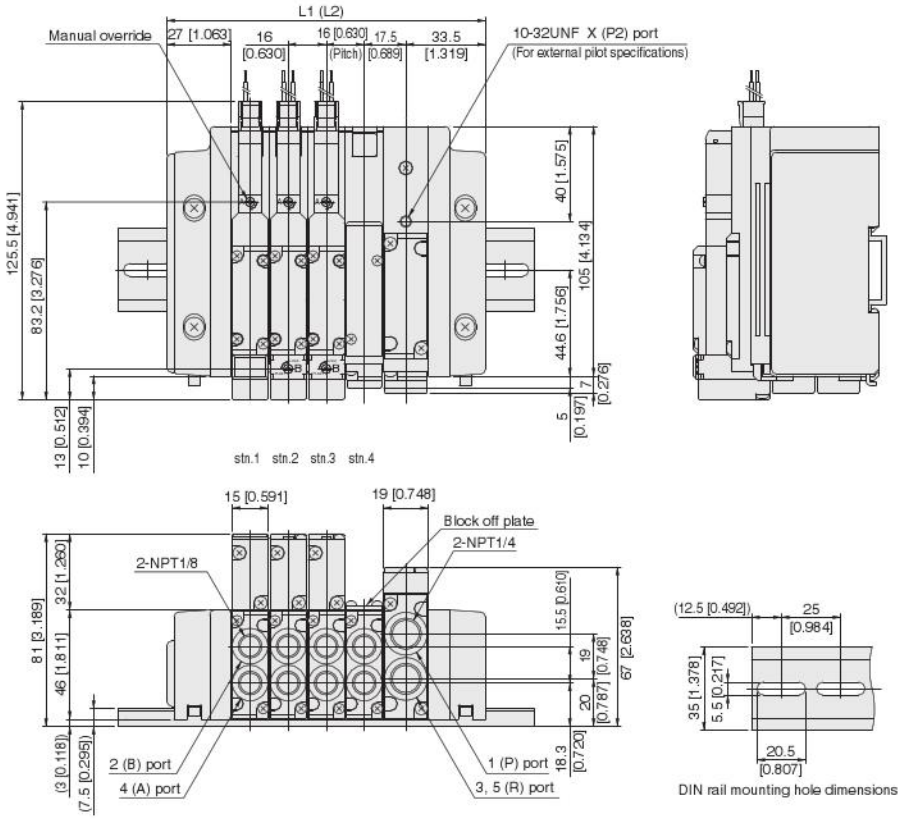


### Unit dimensions

| Number of units | L1 | Length of DIN rail | L2 Note | Length of DIN rail Note |
|---|---|---|---|---|
| 2 | 102 [4.016] | 150 [5.906] | 121 [4.764] | 150 [5.906] |
| 3 | 118 [4.646] | 150 [5.906] | 137 [5.394] | 175 [6.890] |
| 4 | 134 [5.276] | 175 [6.890] | 153 [6.024] | 200 [7.874] |
| 5 | 150 [5.906] | 175 [6.890] | 169 [6.654] | 200 [7.874] |
| 6 | 166 [6.535] | 200 [7.874] | 185 [7.283] | 225 [8.858] |
| 7 | 182 [7.165] | 225 [8.858] | 201 [7.913] | 250 [9.843] |
| 8 | 198 [7.795] | 225 [8.858] | 217 [8.543] | 250 [9.843] |
| 9 | 214 [8.425] | 250 [9.843] | 233 [9.173] | 275 [10.827] |
| 10 | 230 [9.055] | 275 [10.827] | 249 [9.803] | 275 [10.827] |
| 11 | 246 [9.685] | 275 [10.827] | 265 [10.433] | 300 [11.811] |
| 12 | 262 [10.315] | 300 [11.811] | 281 [11.063] | 325 [12.795] |
| 13 | 278 [10.945] | 325 [12.795] | 297 [11.693] | 325 [12.795] |
| 14 | 294 [11.575] | 325 [12.795] | 313 [12.323] | 350 [13.780] |
| 15 | 310 [12.205] | 350 [13.780] | 329 [12.953] | 375 [14.764] |
| 16 | 326 [12.835] | 375 [14.764] | 345 [13.583] | 375 [14.764] |
| 17 | 342 [13.465] | 375 [14.764] | 361 [14.213] | 400 [15.748] |
| 18 | 358 [14.094] | 400 [15.748] | 377 [14.843] | 425 [16.732] |
| 19 | 374 [14.724] | 400 [15.748] | 393 [15.472] | 425 [16.732] |
| 20 | 390 [15.354] | 425 [16.732] | 409 [16.102] | 450 [17.717] |

Note: When two piping blocks are used.

## F15M Number of valves NH Pilot specifications (Direct piping type)

With valve outlet port female thread block
S type plug connector

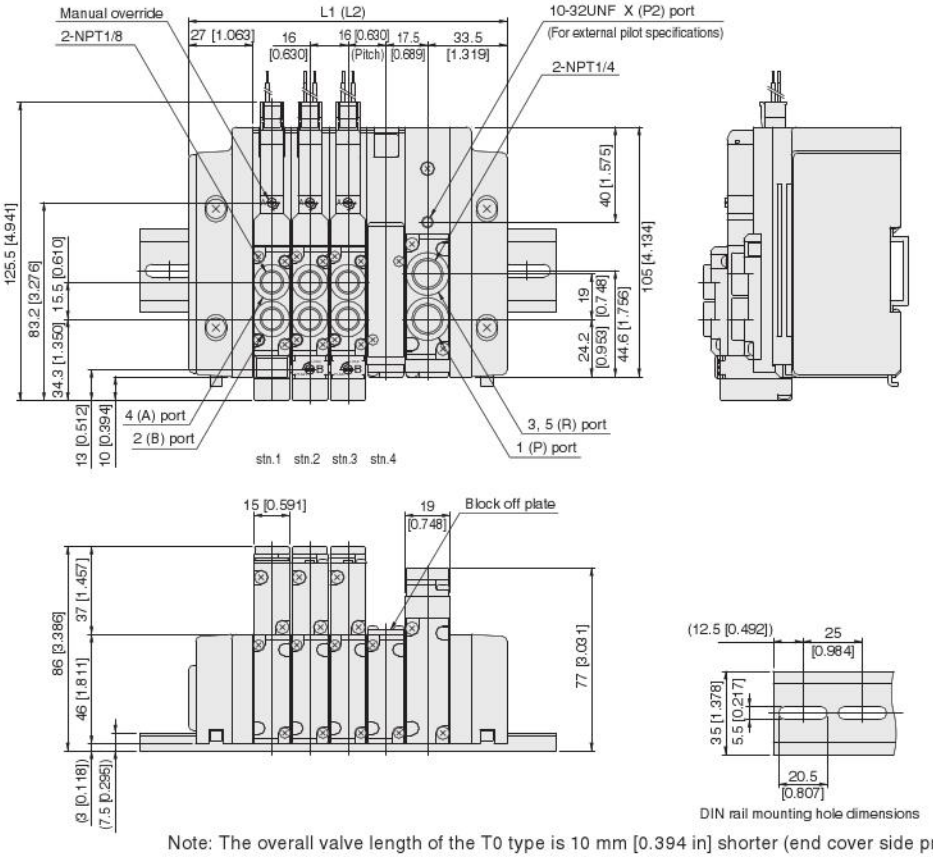


### Unit dimensions

| Number of units | L1 | Length of DIN rail | L2 Note | Length of DIN rail Note |
|---|---|---|---|---|
| 2 | 102 [4.016] | 150 [5.906] | 121 [4.764] | 150 [5.906] |
| 3 | 118 [4.646] | 150 [5.906] | 137 [5.394] | 175 [6.890] |
| 4 | 134 [5.276] | 175 [6.890] | 153 [6.024] | 200 [7.874] |
| 5 | 150 [5.906] | 175 [6.890] | 169 [6.654] | 200 [7.874] |
| 6 | 166 [6.535] | 200 [7.874] | 185 [7.283] | 225 [8.858] |
| 7 | 182 [7.165] | 225 [8.858] | 201 [7.913] | 250 [9.843] |
| 8 | 198 [7.795] | 225 [8.858] | 217 [8.543] | 250 [9.843] |
| 9 | 214 [8.425] | 250 [9.843] | 233 [9.173] | 275 [10.827] |
| 10 | 230 [9.055] | 275 [10.827] | 249 [9.803] | 275 [10.827] |
| 11 | 246 [9.685] | 275 [10.827] | 265 [10.433] | 300 [11.811] |
| 12 | 262 [10.315] | 300 [11.811] | 281 [11.063] | 325 [12.795] |
| 13 | 278 [10.945] | 325 [12.795] | 297 [11.693] | 325 [12.795] |
| 14 | 294 [11.575] | 325 [12.795] | 313 [12.323] | 350 [13.780] |
| 15 | 310 [12.205] | 350 [13.780] | 329 [12.953] | 375 [14.764] |
| 16 | 326 [12.835] | 375 [14.764] | 345 [13.583] | 375 [14.764] |
| 17 | 342 [13.465] | 375 [14.764] | 361 [14.213] | 400 [15.748] |
| 18 | 358 [14.094] | 400 [15.748] | 377 [14.843] | 425 [16.732] |
| 19 | 374 [14.724] | 400 [15.748] | 393 [15.472] | 425 [16.732] |
| 20 | 390 [15.354] | 425 [16.732] | 409 [16.102] | 450 [17.717] |

Note: When two piping blocks are used.

Note: The overall valve length of the T0 type is 10 mm [0.394 in] shorter (end cover side protrusion is 10 mm [0.394 in] less).

## F15M [Number of valves] P J/M/L [Pilot specifications] (Base piping type)

With manifold outlet port dual use fitting block
Flat cable connector 10-pin specifications

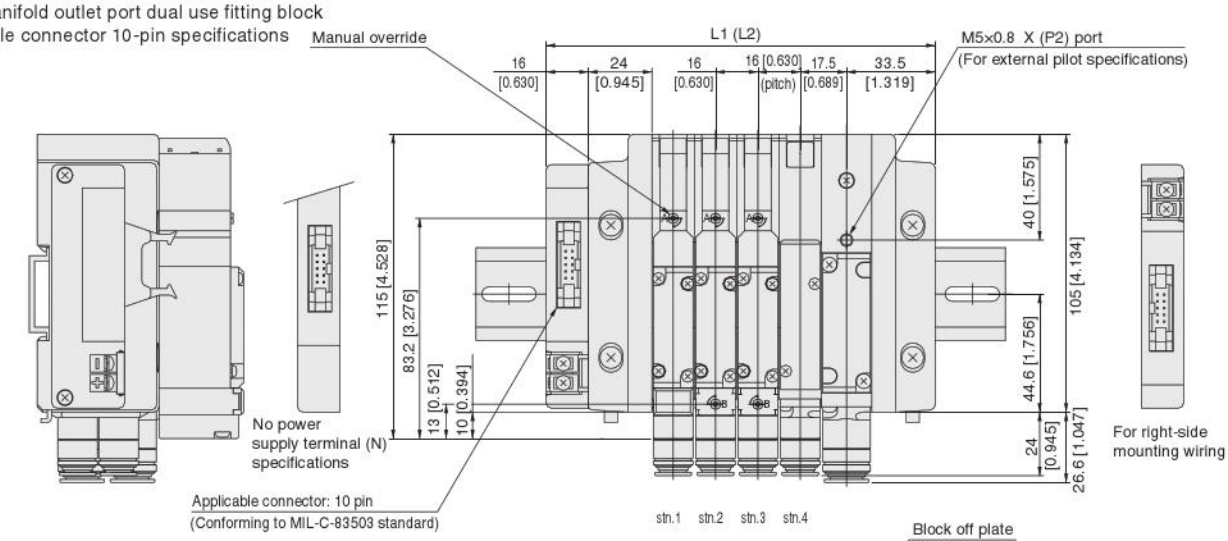


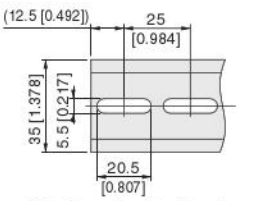


DIN rail mounting hole dimensions

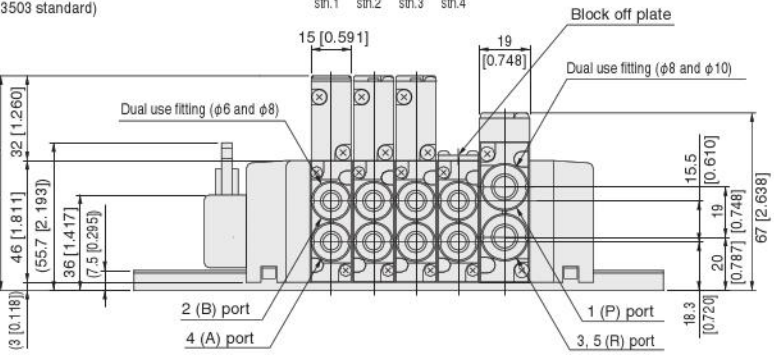


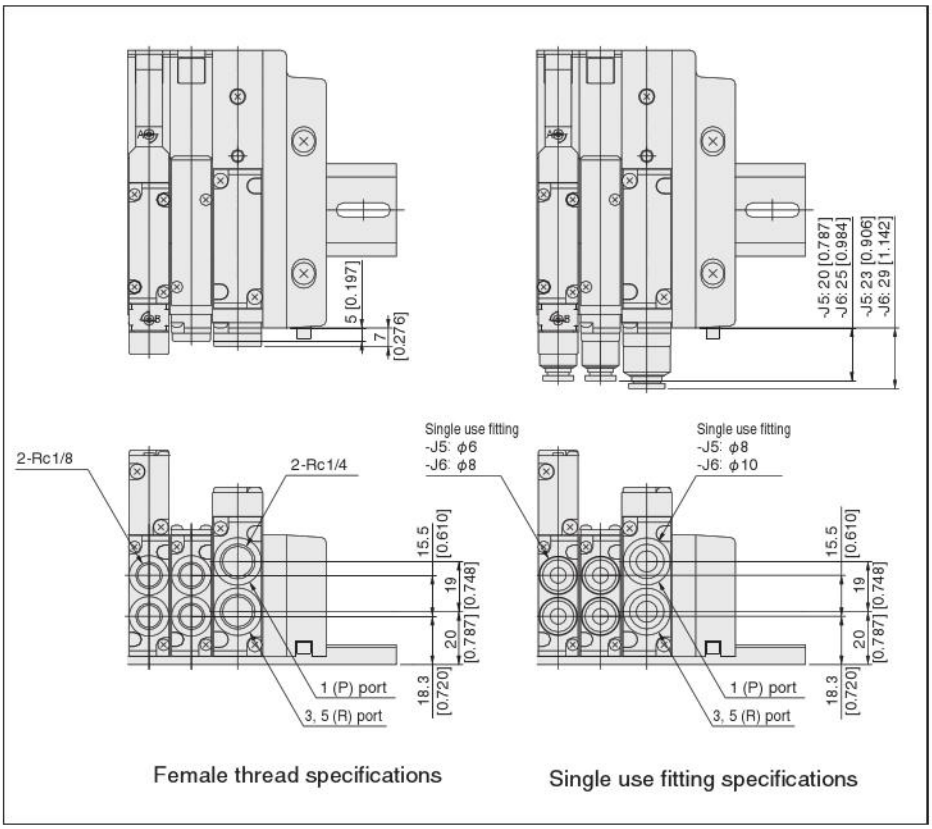


## Unit dimensions

| Number of units | L1 | Length of DIN rail | L2 Note | Length of DIN rail Note |
|---|---|---|---|---|
| 2 | 115 [4.528] | 150 [5.906] | 134 [5.276] | 175 [6.890] |
| 3 | 131 [5.157] | 175 [6.890] | 150 [5.906] | 200 [7.874] |
| 4 | 147 [5.787] | 200 [7.874] | 166 [6.535] | 200 [7.874] |
| 5 | 163 [6.417] | 200 [7.874] | 182 [7.165] | 225 [8.858] |
| 6 | 179 [7.047] | 225 [8.858] | 198 [7.795] | 250 [9.843] |
| 7 | 195 [7.677] | 250 [9.843] | 214 [8.425] | 250 [9.843] |
| 8 | 211 [8.307] | 250 [9.843] | 230 [9.055] | 275 [10.827] |

Note: When two piping blocks are used.
* For right-side mounting wiring (-R), add 3 mm [0.118 in] to the L1 (L2) dimension.

## F15M [Number of valves] P J/M/L [Pilot specifications] (Base piping type)

With manifold outlet port dual use fitting block
Flat cable connector 20-pin specifications (side surface wiring)

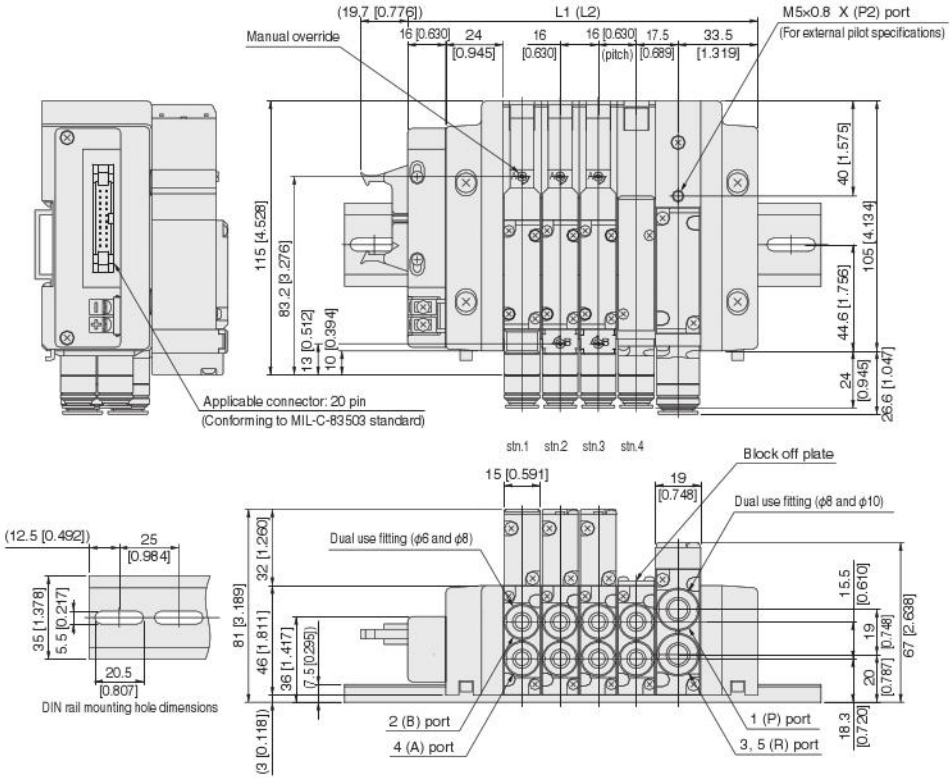


### Unit dimensions

| Number of units | L1 | Length of DIN rail | L2 Note | Length of DIN rail Note |
|---|---|---|---|---|
| 2 | 115 [4.528] | 150 [5.906] | 134 [5.276] | 175 [6.890] |
| 3 | 131 [5.157] | 175 [6.890] | 150 [5.906] | 200 [7.874] |
| 4 | 147 [5.787] | 200 [7.874] | 166 [6.535] | 200 [7.874] |
| 5 | 163 [6.417] | 200 [7.874] | 182 [7.165] | 225 [8.858] |
| 6 | 179 [7.047] | 225 [8.858] | 198 [7.795] | 250 [9.843] |
| 7 | 195 [7.677] | 250 [9.843] | 214 [8.425] | 250 [9.843] |
| 8 | 211 [8.307] | 250 [9.843] | 230 [9.055] | 275 [10.827] |
| 9 | 227 [8.937] | 275 [10.827] | 246 [9.685] | 300 [11.811] |
| 10 | 243 [9.567] | 300 [11.811] | 262 [10.315] | 300 [11.811] |
| 11 | 259 [10.197] | 300 [11.811] | 278 [10.945] | 325 [12.795] |
| 12 | 275 [10.827] | 325 [12.795] | 294 [11.575] | 350 [13.780] |
| 13 | 291 [11.457] | 325 [12.795] | 310 [12.205] | 350 [13.780] |
| 14 | 307 [12.087] | 350 [13.780] | 326 [12.835] | 375 [14.764] |
| 15 | 323 [12.717] | 375 [14.764] | 342 [13.465] | 375 [14.764] |
| 16 | 339 [13.346] | 375 [14.764] | 358 [14.094] | 400 [15.748] |

Note: When two piping blocks are used.

* For right-side mounting wiring (-R), add 3 mm [0.118 in] to the L1 (L2) dimension.

## F15M [Number of valves] P J/M/L [Pilot specifications] (Base piping type)

With manifold outlet port dual use fitting block
Flat cable connector 26-pin specifications

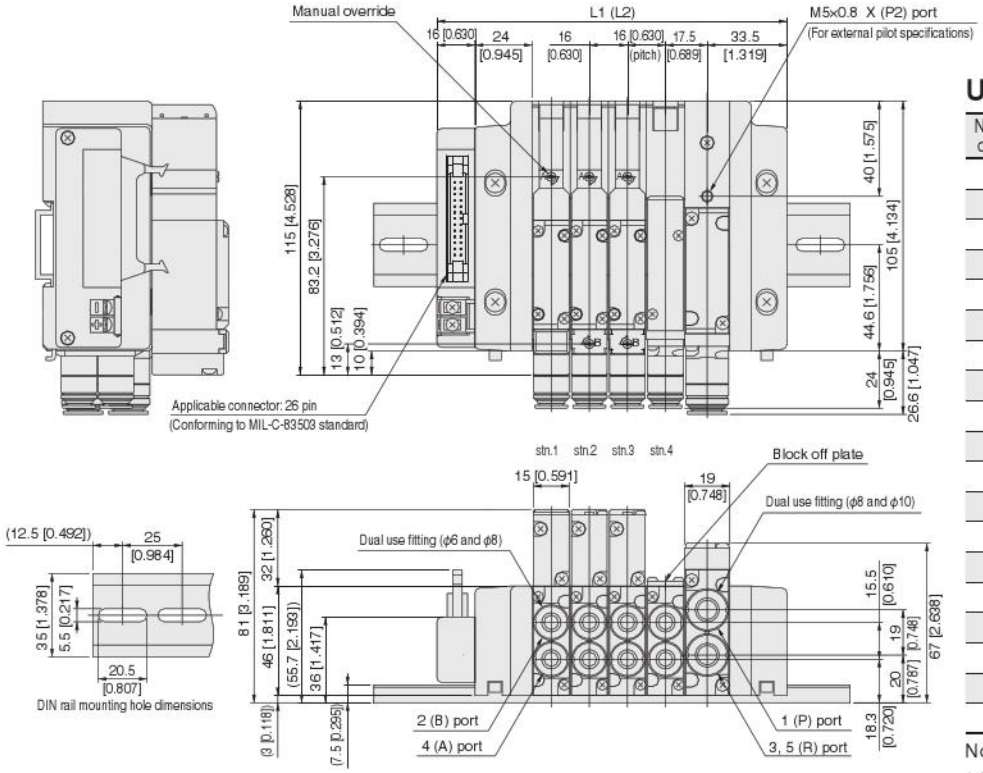


### Unit dimensions

| Number of units | L1 | Length of DIN rail | L2 Note | Length of DIN rail Note |
|---|---|---|---|---|
| 2 | 115 [4.528] | 150 [5.906] | 134 [5.276] | 175 [6.890] |
| 3 | 131 [5.157] | 175 [6.890] | 150 [5.906] | 200 [7.874] |
| 4 | 147 [5.787] | 200 [7.874] | 166 [6.535] | 200 [7.874] |
| 5 | 163 [6.417] | 200 [7.874] | 182 [7.165] | 225 [8.858] |
| 6 | 179 [7.047] | 225 [8.858] | 198 [7.795] | 250 [9.843] |
| 7 | 195 [7.677] | 250 [9.843] | 214 [8.425] | 250 [9.843] |
| 8 | 211 [8.307] | 250 [9.843] | 230 [9.055] | 275 [10.827] |
| 9 | 227 [8.937] | 275 [10.827] | 246 [9.685] | 300 [11.811] |
| 10 | 243 [9.567] | 300 [11.811] | 262 [10.315] | 300 [11.811] |
| 11 | 259 [10.197] | 300 [11.811] | 278 [10.945] | 325 [12.795] |
| 12 | 275 [10.827] | 325 [12.795] | 294 [11.575] | 350 [13.780] |
| 13 | 291 [11.457] | 325 [12.795] | 310 [12.205] | 350 [13.780] |
| 14 | 307 [12.087] | 350 [13.780] | 326 [12.835] | 375 [14.764] |
| 15 | 323 [12.717] | 375 [14.764] | 342 [13.465] | 375 [14.764] |
| 16 | 339 [13.346] | 375 [14.764] | 358 [14.094] | 400 [15.748] |
| 17 | 355 [13.976] | 400 [15.748] | 374 [14.724] | 425 [16.732] |
| 18 | 371 [14.606] | 425 [16.732] | 390 [15.354] | 425 [16.732] |
| 19 | 387 [15.236] | 425 [16.732] | 406 [15.984] | 450 [17.717] |
| 20 | 403 [15.866] | 450 [17.717] | 422 [16.614] | 475 [18.701] |

Note: When two piping blocks are used.

* For right-side mounting wiring (-R), add 3 mm [0.118 in] to the L1 (L2) dimension.

## F15M Number of valves P J/M/L Pilot specifications (Base piping type)

With manifold outlet port dual use fitting block
D-sub connector 25-pin specifications

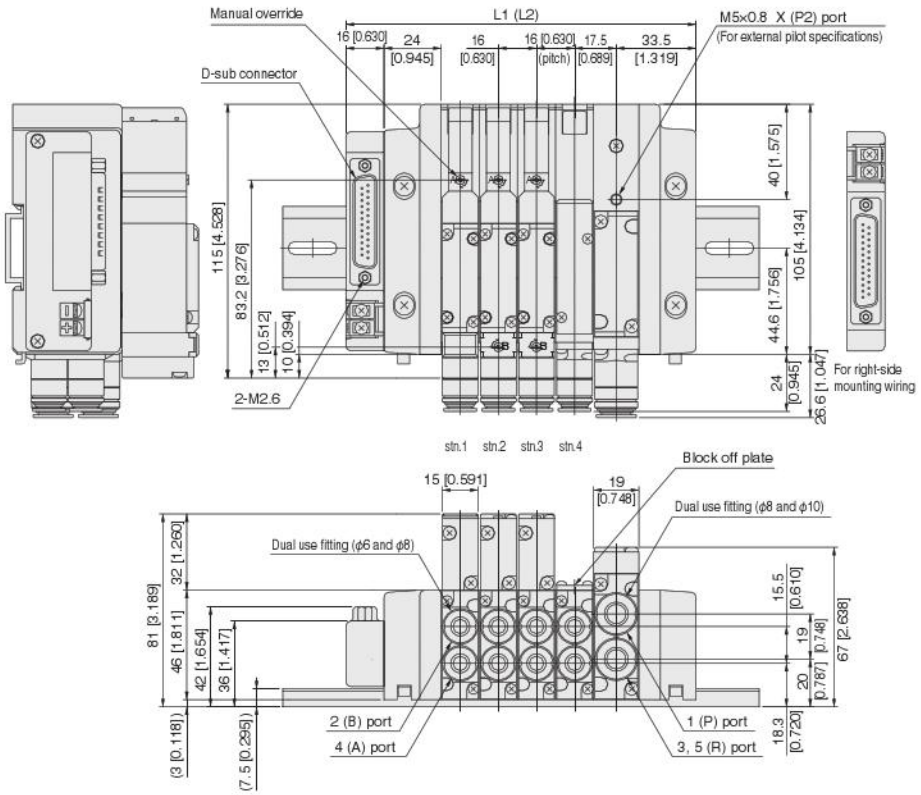


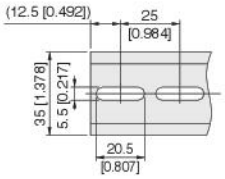


DIN rail mounting hole dimensions

### Unit dimensions

| Number of units | L1 | Length of DIN rail | L2 Note | Length of DIN rail Note |
|---|---|---|---|---|
| 2 | 115 [4.528] | 150 [5.906] | 134 [5.276] | 175 [6.890] |
| 3 | 131 [5.157] | 175 [6.890] | 150 [5.906] | 200 [7.874] |
| 4 | 147 [5.787] | 200 [7.874] | 166 [6.535] | 200 [7.874] |
| 5 | 163 [6.417] | 200 [7.874] | 182 [7.165] | 225 [8.858] |
| 6 | 179 [7.047] | 225 [8.858] | 198 [7.795] | 250 [9.843] |
| 7 | 195 [7.677] | 250 [9.843] | 214 [8.425] | 250 [9.843] |
| 8 | 211 [8.307] | 250 [9.843] | 230 [9.055] | 275 [10.827] |
| 9 | 227 [8.937] | 275 [10.827] | 246 [9.685] | 300 [11.811] |
| 10 | 243 [9.567] | 300 [11.811] | 262 [10.315] | 300 [11.811] |
| 11 | 259 [10.197] | 300 [11.811] | 278 [10.945] | 325 [12.795] |
| 12 | 275 [10.827] | 325 [12.795] | 294 [11.575] | 350 [13.780] |
| 13 | 291 [11.457] | 325 [12.795] | 310 [12.205] | 350 [13.780] |
| 14 | 307 [12.087] | 350 [13.780] | 326 [12.835] | 375 [14.764] |
| 15 | 323 [12.717] | 375 [14.764] | 342 [13.465] | 375 [14.764] |
| 16 | 339 [13.346] | 375 [14.764] | 358 [14.094] | 400 [15.748] |
| 17 | 355 [13.976] | 400 [15.748] | 374 [14.724] | 425 [16.732] |
| 18 | 371 [14.606] | 425 [16.732] | 390 [15.354] | 425 [16.732] |
| 19 | 387 [15.236] | 425 [16.732] | 406 [15.984] | 450 [17.717] |
| 20 | 403 [15.866] | 450 [17.717] | 422 [16.614] | 475 [18.701] |

Note: When two piping blocks are used.

* For right-side mounting wiring (-R), add 3 mm [0.118 in] to the L1 (L2) dimension.

## F15M Number of valves P J/M/L Pilot specifications (Base piping type)

With manifold outlet port dual use fitting block
Terminal block type

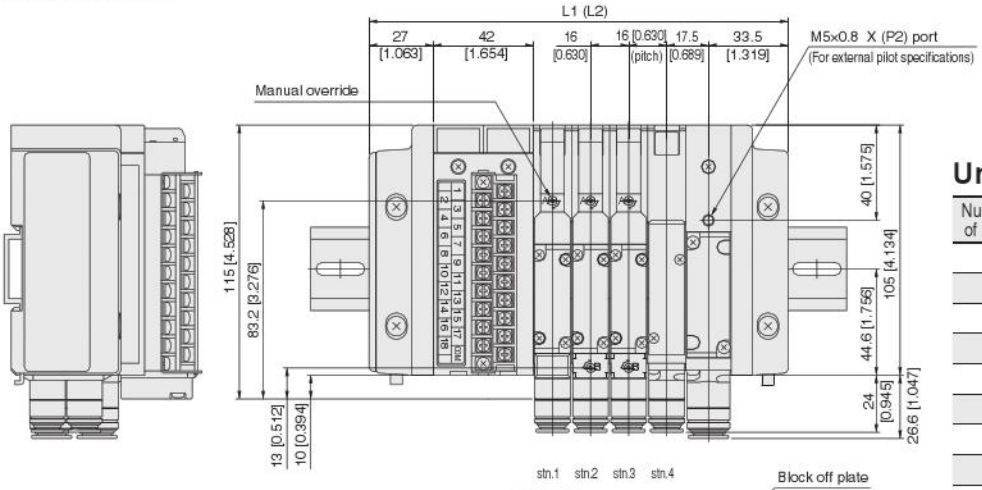


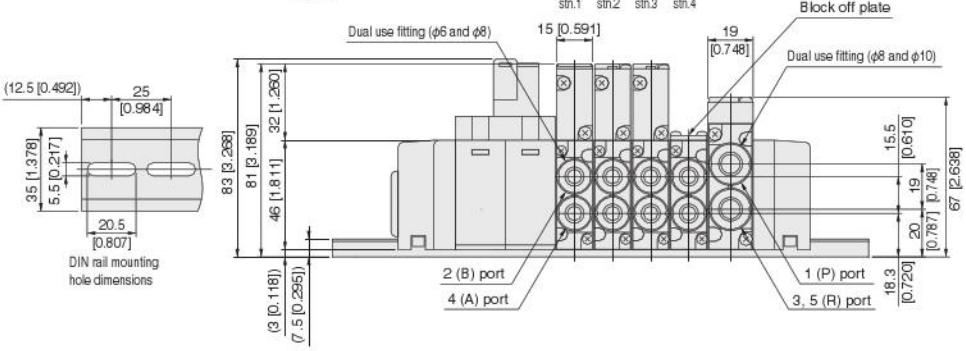


### Unit dimensions

| Number of units | L1 | Length of DIN rail | L2 Note | Length of DIN rail Note |
|---|---|---|---|---|
| 2 | 144 [5.669] | 175 [6.890] | 163 [6.417] | 200 [7.874] |
| 3 | 160 [6.299] | 200 [7.874] | 179 [7.047] | 225 [8.858] |
| 4 | 176 [6.929] | 225 [8.858] | 195 [7.677] | 225 [8.858] |
| 5 | 192 [7.559] | 225 [8.858] | 211 [8.307] | 250 [9.843] |
| 6 | 208 [8.189] | 250 [9.843] | 227 [8.937] | 275 [10.827] |
| 7 | 224 [8.819] | 250 [9.843] | 243 [9.567] | 275 [10.827] |
| 8 | 240 [9.449] | 275 [10.827] | 259 [10.197] | 300 [11.811] |
| 9 | 256 [10.079] | 300 [11.811] | 275 [10.827] | 300 [11.811] |
| 10 | 272 [10.709] | 300 [11.811] | 291 [11.457] | 325 [12.795] |
| 11 | 288 [11.339] | 325 [12.795] | 307 [12.087] | 350 [13.780] |
| 12 | 304 [11.969] | 350 [13.780] | 323 [12.717] | 350 [13.780] |
| 13 | 320 [12.598] | 350 [13.780] | 339 [13.346] | 375 [14.764] |
| 14 | 336 [13.228] | 375 [14.764] | 355 [13.976] | 400 [15.748] |
| 15 | 352 [13.858] | 400 [15.748] | 371 [14.606] | 400 [15.748] |
| 16 | 368 [14.488] | 400 [15.748] | 387 [15.236] | 425 [16.732] |
| 17 | 384 [15.118] | 425 [16.732] | 403 [15.866] | 450 [17.717] |
| 18 | 400 [15.748] | 425 [16.732] | 419 [16.496] | 450 [17.717] |

Note: When two piping blocks are used.

## F15M Number of valves PHL Pilot specifications (Base piping type)

With manifold outlet port female thread block
Flat cable connector 10-pin specifications

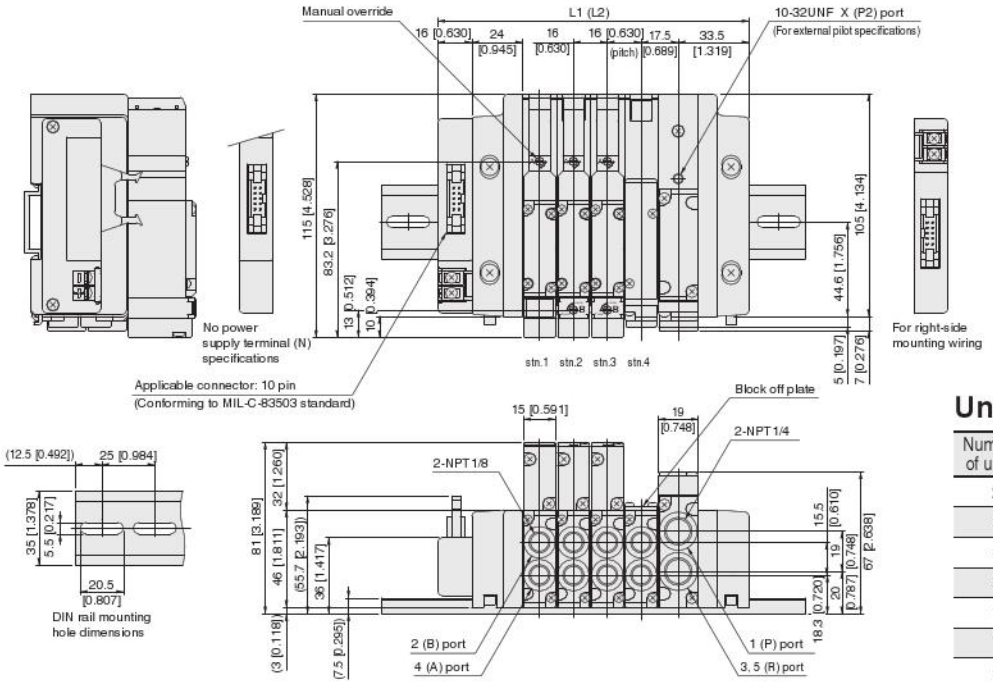


### Unit dimensions

| Number of units | L1 | Length of DIN rail | L2 Note | Length of DIN rail Note |
|---|---|---|---|---|
| 2 | 115 [4.528] | 150 [5.906] | 134 [5.276] | 175 [6.890] |
| 3 | 131 [5.157] | 175 [6.890] | 150 [5.906] | 200 [7.874] |
| 4 | 147 [5.787] | 200 [7.874] | 166 [6.535] | 200 [7.874] |
| 5 | 163 [6.417] | 200 [7.874] | 182 [7.165] | 225 [8.858] |
| 6 | 179 [7.047] | 225 [8.858] | 198 [7.795] | 250 [9.843] |
| 7 | 195 [7.677] | 250 [9.843] | 214 [8.425] | 250 [9.843] |
| 8 | 211 [8.307] | 250 [9.843] | 230 [9.055] | 275 [10.827] |

Note: When two piping blocks are used.
* For right-side mounting wiring (-R), add 3 mm [0.118 in] to the L1 (L2) dimension.

## F15M Number of valves PH Pilot specifications (Direct piping type)

With valve outlet port female thread block
Flat cable connector 10-pin specifications

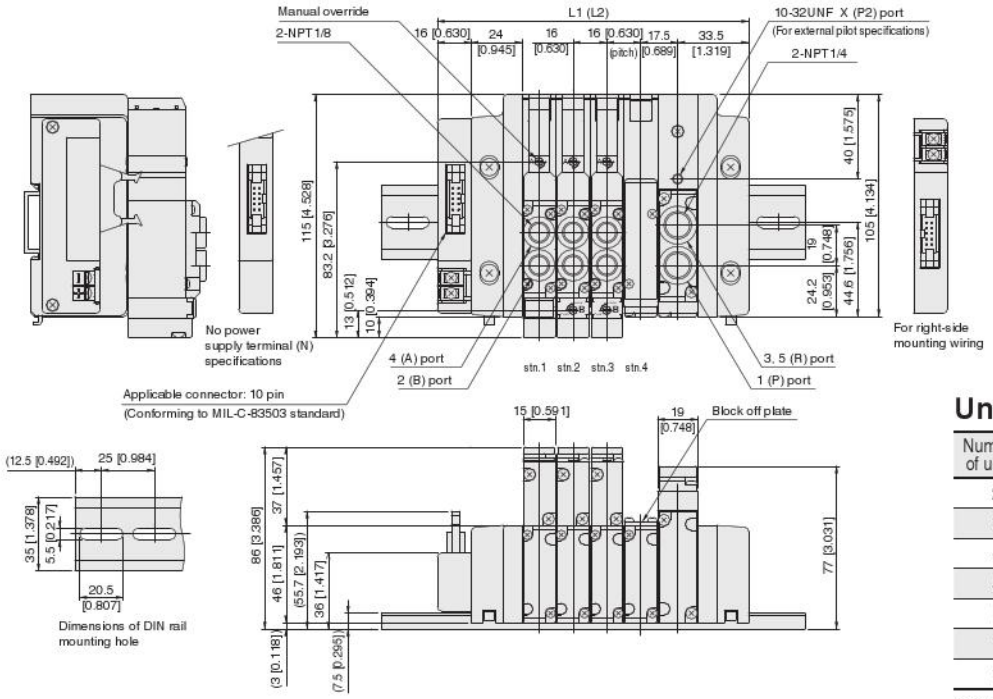


### Unit dimensions

| Number of units | L1 | Length of DIN rail | L2 Note | Length of DIN rail Note |
|---|---|---|---|---|
| 2 | 115 [4.528] | 150 [5.906] | 134 [5.276] | 175 [6.890] |
| 3 | 131 [5.157] | 175 [6.890] | 150 [5.906] | 200 [7.874] |
| 4 | 147 [5.787] | 200 [7.874] | 166 [6.535] | 200 [7.874] |
| 5 | 163 [6.417] | 200 [7.874] | 182 [7.165] | 225 [8.858] |
| 6 | 179 [7.047] | 225 [8.858] | 198 [7.795] | 250 [9.843] |
| 7 | 195 [7.677] | 250 [9.843] | 214 [8.425] | 250 [9.843] |
| 8 | 211 [8.307] | 250 [9.843] | 230 [9.055] | 275 [10.827] |

Note: When two piping blocks are used.
* For right-side mounting wiring (-R), add 3 mm [0.118 in] to the L1 (L2) dimension.

## F15M Number of valves PHL Pilot specifications (Base piping type)

With manifold outlet port female thread block
Flat cable connector 20-pin specifications (top surface wiring)

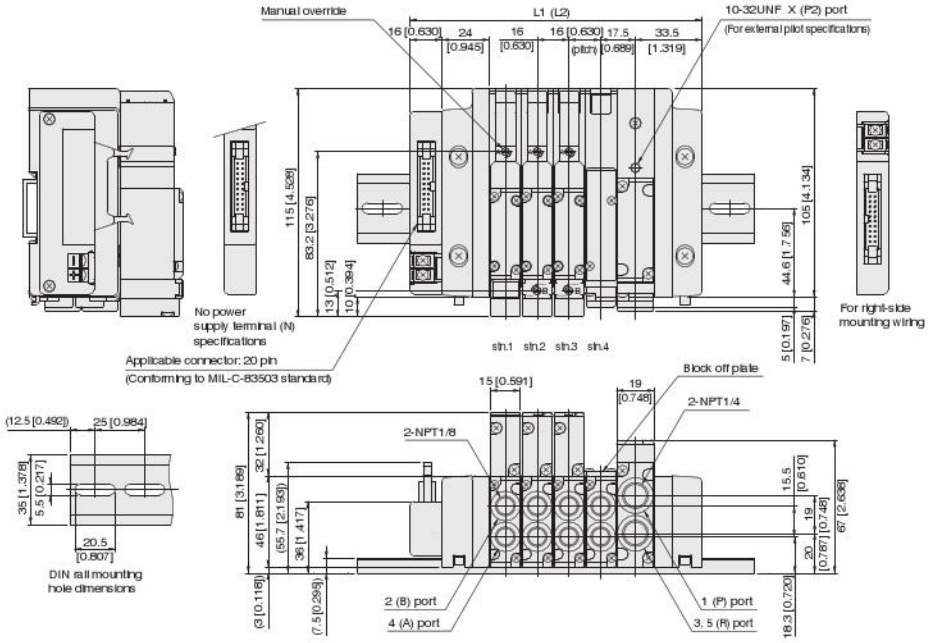


### Unit dimensions

| Number of units | L1 | Length of DIN rail | L2 Note | Length of DIN rail Note |
|---|---|---|---|---|
| 2 | 115 [4.528] | 150 [5.906] | 134 [5.276] | 175 [6.890] |
| 3 | 131 [5.157] | 175 [6.890] | 150 [5.906] | 200 [7.874] |
| 4 | 147 [5.787] | 200 [7.874] | 166 [6.535] | 200 [7.874] |
| 5 | 163 [6.417] | 200 [7.874] | 182 [7.165] | 225 [8.858] |
| 6 | 179 [7.047] | 225 [8.858] | 198 [7.795] | 250 [9.843] |
| 7 | 195 [7.677] | 250 [9.843] | 214 [8.425] | 250 [9.843] |
| 8 | 211 [8.307] | 250 [9.843] | 230 [9.055] | 275 [10.827] |
| 9 | 227 [8.937] | 275 [10.827] | 246 [9.685] | 300 [11.811] |
| 10 | 243 [9.567] | 300 [11.811] | 262 [10.315] | 300 [11.811] |
| 11 | 259 [10.197] | 300 [11.811] | 278 [10.945] | 325 [12.795] |
| 12 | 275 [10.827] | 325 [12.795] | 294 [11.575] | 350 [13.780] |
| 13 | 291 [11.457] | 325 [12.795] | 310 [12.205] | 350 [13.780] |
| 14 | 307 [12.087] | 350 [13.780] | 326 [12.835] | 375 [14.764] |
| 15 | 323 [12.717] | 375 [14.764] | 342 [13.465] | 375 [14.764] |
| 16 | 339 [13.346] | 375 [14.764] | 358 [14.094] | 400 [15.748] |

Note: When two piping blocks are used.

* For right-side mounting wiring (-R), add 3 mm [0.118 in] to the L1 (L2) dimension.

## F15M Number of valves PH Pilot specifications (Direct piping type)

With valve outlet port female thread block
Flat cable connector 20-pin specifications (top surface wiring)

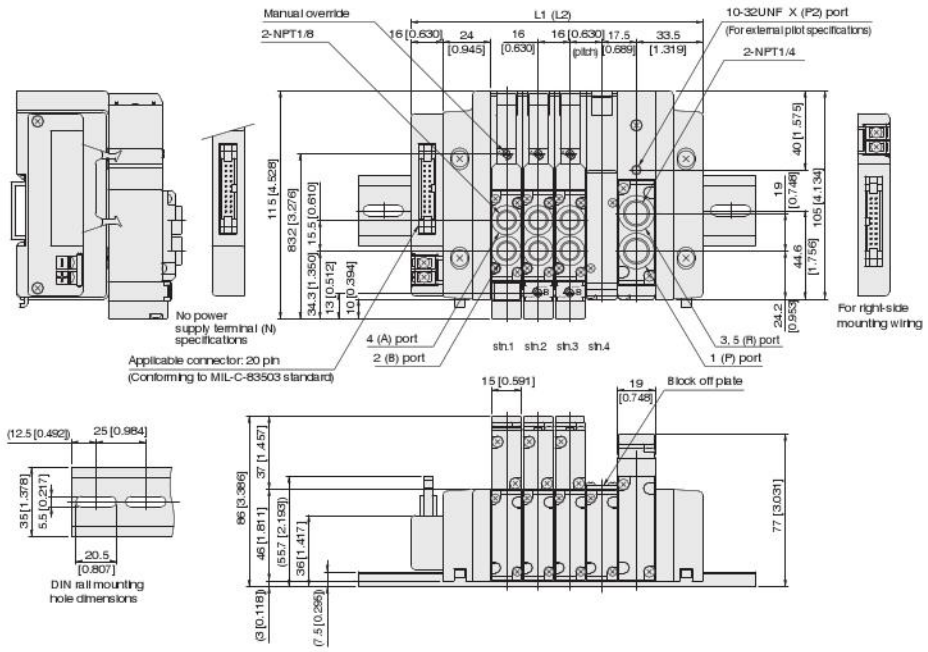


### Unit dimensions

| Number of units | L1 | Length of DIN rail | L2 Note | Length of DIN rail Note |
|---|---|---|---|---|
| 2 | 115 [4.528] | 150 [5.906] | 134 [5.276] | 175 [6.890] |
| 3 | 131 [5.157] | 175 [6.890] | 150 [5.906] | 200 [7.874] |
| 4 | 147 [5.787] | 200 [7.874] | 166 [6.535] | 200 [7.874] |
| 5 | 163 [6.417] | 200 [7.874] | 182 [7.165] | 225 [8.858] |
| 6 | 179 [7.047] | 225 [8.858] | 198 [7.795] | 250 [9.843] |
| 7 | 195 [7.677] | 250 [9.843] | 214 [8.425] | 250 [9.843] |
| 8 | 211 [8.307] | 250 [9.843] | 230 [9.055] | 275 [10.827] |
| 9 | 227 [8.937] | 275 [10.827] | 246 [9.685] | 300 [11.811] |
| 10 | 243 [9.567] | 300 [11.811] | 262 [10.315] | 300 [11.811] |
| 11 | 259 [10.197] | 300 [11.811] | 278 [10.945] | 325 [12.795] |
| 12 | 275 [10.827] | 325 [12.795] | 294 [11.575] | 350 [13.780] |
| 13 | 291 [11.457] | 325 [12.795] | 310 [12.205] | 350 [13.780] |
| 14 | 307 [12.087] | 350 [13.780] | 326 [12.835] | 375 [14.764] |
| 15 | 323 [12.717] | 375 [14.764] | 342 [13.465] | 375 [14.764] |
| 16 | 339 [13.346] | 375 [14.764] | 358 [14.094] | 400 [15.748] |

Note: When two piping blocks are used.

* For right-side mounting wiring (-R), add 3 mm [0.118 in] to the L1 (L2) dimension.

## F15M Number of valves PHL Pilot specifications (Base piping type)

With manifold outlet port female thread block
Flat cable connector 26-pin specifications

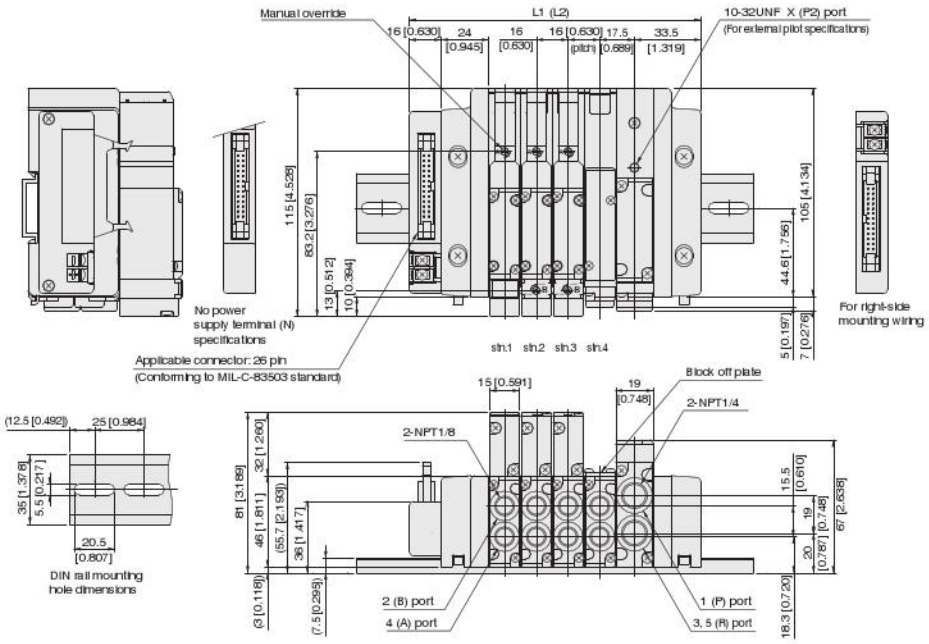


### Unit dimensions

| Number of units | L1 | Length of DIN rail | L2 Note | Length of DIN rail Note |
|---|---|---|---|---|
| 2 | 115 [4.528] | 150 [5.906] | 134 [5.276] | 175 [6.890] |
| 3 | 131 [5.157] | 175 [6.890] | 150 [5.906] | 200 [7.874] |
| 4 | 147 [5.787] | 200 [7.874] | 166 [6.535] | 200 [7.874] |
| 5 | 163 [6.417] | 200 [7.874] | 182 [7.165] | 225 [8.858] |
| 6 | 179 [7.047] | 225 [8.858] | 198 [7.795] | 250 [9.843] |
| 7 | 195 [7.677] | 250 [9.843] | 214 [8.425] | 250 [9.843] |
| 8 | 211 [8.307] | 250 [9.843] | 230 [9.055] | 275 [10.827] |
| 9 | 227 [8.937] | 275 [10.827] | 246 [9.685] | 300 [11.811] |
| 10 | 243 [9.567] | 300 [11.811] | 262 [10.315] | 300 [11.811] |
| 11 | 259 [10.197] | 300 [11.811] | 278 [10.945] | 325 [12.795] |
| 12 | 275 [10.827] | 325 [12.795] | 294 [11.575] | 350 [13.780] |
| 13 | 291 [11.457] | 325 [12.795] | 310 [12.205] | 350 [13.780] |
| 14 | 307 [12.087] | 350 [13.780] | 326 [12.835] | 375 [14.764] |
| 15 | 323 [12.717] | 375 [14.764] | 342 [13.465] | 375 [14.764] |
| 16 | 339 [13.346] | 375 [14.764] | 358 [14.094] | 400 [15.748] |
| 17 | 355 [13.976] | 400 [15.748] | 374 [14.724] | 425 [16.732] |
| 18 | 371 [14.606] | 425 [16.732] | 390 [15.354] | 425 [16.732] |
| 19 | 387 [15.236] | 425 [16.732] | 406 [15.984] | 450 [17.717] |
| 20 | 403 [15.866] | 450 [17.717] | 422 [16.614] | 475 [18.701] |

Note: When two piping blocks are used.

* For right-side mounting wiring (-R), add 3 mm [0.118 in] to the L1 (L2) dimension.

## F15M Number of valves PH Pilot specifications (Direct piping type)

With valve outlet port female thread block
Flat cable connector 26-pin specifications

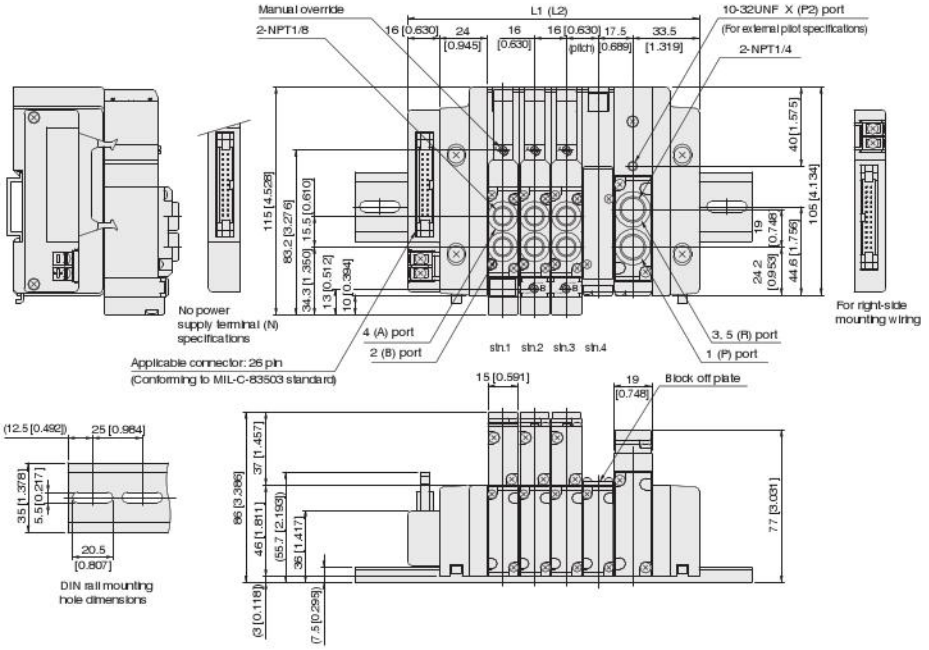


### Unit dimensions

| Number of units | L1 | Length of DIN rail | L2 Note | Length of DIN rail Note |
|---|---|---|---|---|
| 2 | 115 [4.528] | 150 [5.906] | 134 [5.276] | 175 [6.890] |
| 3 | 131 [5.157] | 175 [6.890] | 150 [5.906] | 200 [7.874] |
| 4 | 147 [5.787] | 200 [7.874] | 166 [6.535] | 200 [7.874] |
| 5 | 163 [6.417] | 200 [7.874] | 182 [7.165] | 225 [8.858] |
| 6 | 179 [7.047] | 225 [8.858] | 198 [7.795] | 250 [9.843] |
| 7 | 195 [7.677] | 250 [9.843] | 214 [8.425] | 250 [9.843] |
| 8 | 211 [8.307] | 250 [9.843] | 230 [9.055] | 275 [10.827] |
| 9 | 227 [8.937] | 275 [10.827] | 246 [9.685] | 300 [11.811] |
| 10 | 243 [9.567] | 300 [11.811] | 262 [10.315] | 300 [11.811] |
| 11 | 259 [10.197] | 300 [11.811] | 278 [10.945] | 325 [12.795] |
| 12 | 275 [10.827] | 325 [12.795] | 294 [11.575] | 350 [13.780] |
| 13 | 291 [11.457] | 325 [12.795] | 310 [12.205] | 350 [13.780] |
| 14 | 307 [12.087] | 350 [13.780] | 326 [12.835] | 375 [14.764] |
| 15 | 323 [12.717] | 375 [14.764] | 342 [13.465] | 375 [14.764] |
| 16 | 339 [13.346] | 375 [14.764] | 358 [14.094] | 400 [15.748] |
| 17 | 355 [13.976] | 400 [15.748] | 374 [14.724] | 425 [16.732] |
| 18 | 371 [14.606] | 425 [16.732] | 390 [15.354] | 425 [16.732] |
| 19 | 387 [15.236] | 425 [16.732] | 406 [15.984] | 450 [17.717] |
| 20 | 403 [15.866] | 450 [17.717] | 422 [16.614] | 475 [18.701] |

Note: When two piping blocks are used.

* For right-side mounting wiring (-R), add 3 mm [0.118 in] to the L1 (L2) dimension.

## F15M Number of valves PHL Pilot specifications (Base piping type)

With manifold outlet port female thread block
D-sub connector 25-pin specifications

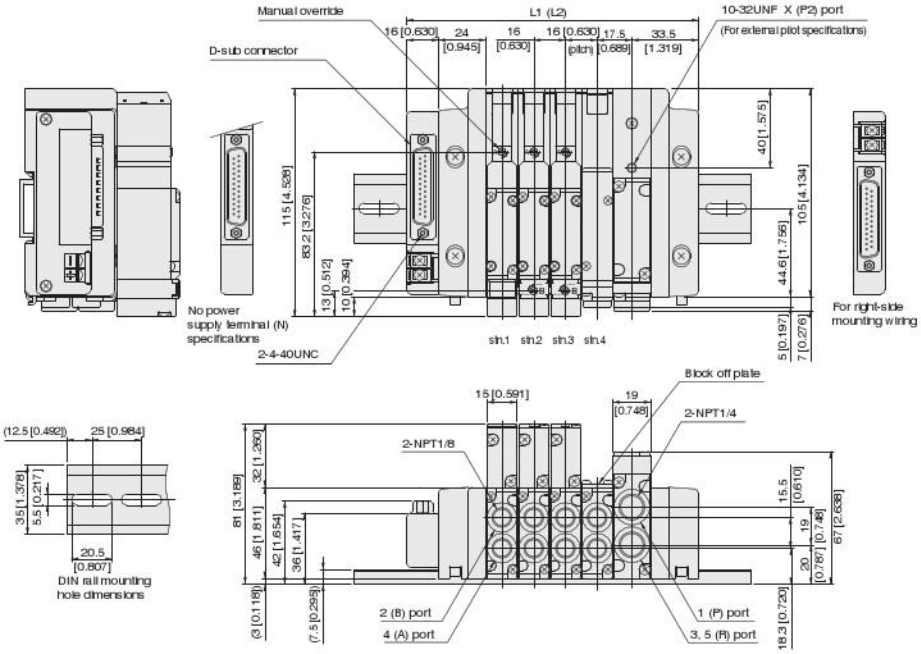


### Unit dimensions

| Number of units | L1 | Length of DIN rail | L2 Note | Length of DIN rail Note |
|---|---|---|---|---|
| 2 | 115 [4.528] | 150 [5.906] | 134 [5.276] | 175 [6.890] |
| 3 | 131 [5.157] | 175 [6.890] | 150 [5.906] | 200 [7.874] |
| 4 | 147 [5.787] | 200 [7.874] | 166 [6.535] | 200 [7.874] |
| 5 | 163 [6.417] | 200 [7.874] | 182 [7.165] | 225 [8.858] |
| 6 | 179 [7.047] | 225 [8.858] | 198 [7.795] | 250 [9.843] |
| 7 | 195 [7.677] | 250 [9.843] | 214 [8.425] | 250 [9.843] |
| 8 | 211 [8.307] | 250 [9.843] | 230 [9.055] | 275 [10.827] |
| 9 | 227 [8.937] | 275 [10.827] | 246 [9.685] | 300 [11.811] |
| 10 | 243 [9.567] | 300 [11.811] | 262 [10.315] | 300 [11.811] |
| 11 | 259 [10.197] | 300 [11.811] | 278 [10.945] | 325 [12.795] |
| 12 | 275 [10.827] | 325 [12.795] | 294 [11.575] | 350 [13.780] |
| 13 | 291 [11.457] | 325 [12.795] | 310 [12.205] | 350 [13.780] |
| 14 | 307 [12.087] | 350 [13.780] | 326 [12.835] | 375 [14.764] |
| 15 | 323 [12.717] | 375 [14.764] | 342 [13.465] | 375 [14.764] |
| 16 | 339 [13.346] | 375 [14.764] | 358 [14.094] | 400 [15.748] |
| 17 | 355 [13.976] | 400 [15.748] | 374 [14.724] | 425 [16.732] |
| 18 | 371 [14.606] | 425 [16.732] | 390 [15.354] | 425 [16.732] |
| 19 | 387 [15.236] | 425 [16.732] | 406 [15.984] | 450 [17.717] |
| 20 | 403 [15.866] | 450 [17.717] | 422 [16.614] | 475 [18.701] |

Note: When two piping blocks are used.

* For right-side mounting wiring (-R), add 3 mm [0.118 in] to the L1 (L2) dimension.

## F15M Number of valves PH Pilot specifications (Direct piping type)

With valve outlet port female thread block
D-sub connector 25-pin specifications

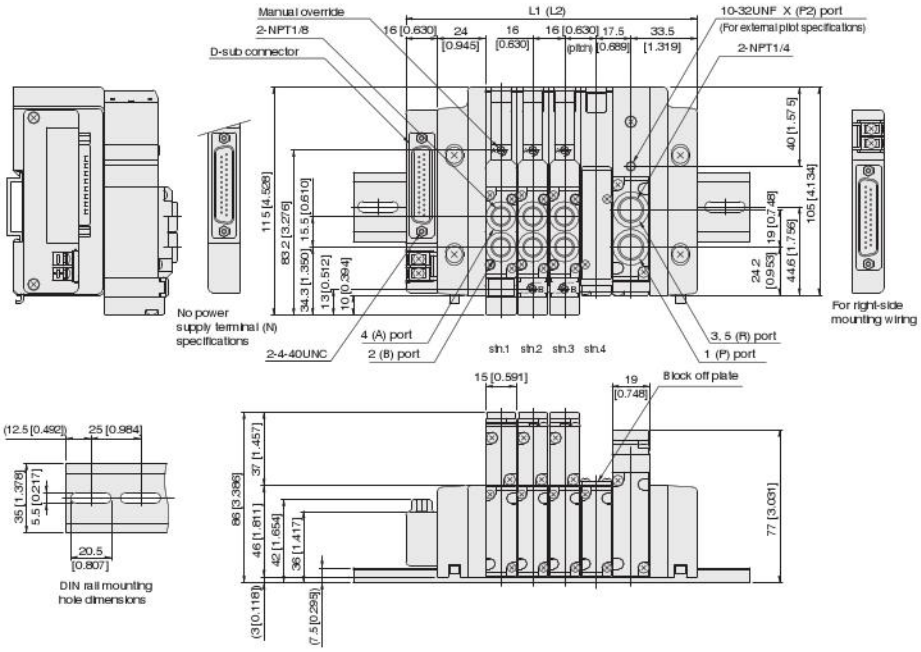


### Unit dimensions

| Number of units | L1 | Length of DIN rail | L2 Note | Length of DIN rail Note |
|---|---|---|---|---|
| 2 | 115 [4.528] | 150 [5.906] | 134 [5.276] | 175 [6.890] |
| 3 | 131 [5.157] | 175 [6.890] | 150 [5.906] | 200 [7.874] |
| 4 | 147 [5.787] | 200 [7.874] | 166 [6.535] | 200 [7.874] |
| 5 | 163 [6.417] | 200 [7.874] | 182 [7.165] | 225 [8.858] |
| 6 | 179 [7.047] | 225 [8.858] | 198 [7.795] | 250 [9.843] |
| 7 | 195 [7.677] | 250 [9.843] | 214 [8.425] | 250 [9.843] |
| 8 | 211 [8.307] | 250 [9.843] | 230 [9.055] | 275 [10.827] |
| 9 | 227 [8.937] | 275 [10.827] | 246 [9.685] | 300 [11.811] |
| 10 | 243 [9.567] | 300 [11.811] | 262 [10.315] | 300 [11.811] |
| 11 | 259 [10.197] | 300 [11.811] | 278 [10.945] | 325 [12.795] |
| 12 | 275 [10.827] | 325 [12.795] | 294 [11.575] | 350 [13.780] |
| 13 | 291 [11.457] | 325 [12.795] | 310 [12.205] | 350 [13.780] |
| 14 | 307 [12.087] | 350 [13.780] | 326 [12.835] | 375 [14.764] |
| 15 | 323 [12.717] | 375 [14.764] | 342 [13.465] | 375 [14.764] |
| 16 | 339 [13.346] | 375 [14.764] | 358 [14.094] | 400 [15.748] |
| 17 | 355 [13.976] | 400 [15.748] | 374 [14.724] | 425 [16.732] |
| 18 | 371 [14.606] | 425 [16.732] | 390 [15.354] | 425 [16.732] |
| 19 | 387 [15.236] | 425 [16.732] | 406 [15.984] | 450 [17.717] |
| 20 | 403 [15.866] | 450 [17.717] | 422 [16.614] | 475 [18.701] |

Note: When two piping blocks are used.

* For right-side mounting wiring (-R), add 3 mm [0.118 in] to the L1 (L2) dimension.

## F15M Number of valves PHL Pilot specifications (Base piping type)

With manifold outlet port female thread block
D-sub connector 37-pin specifications

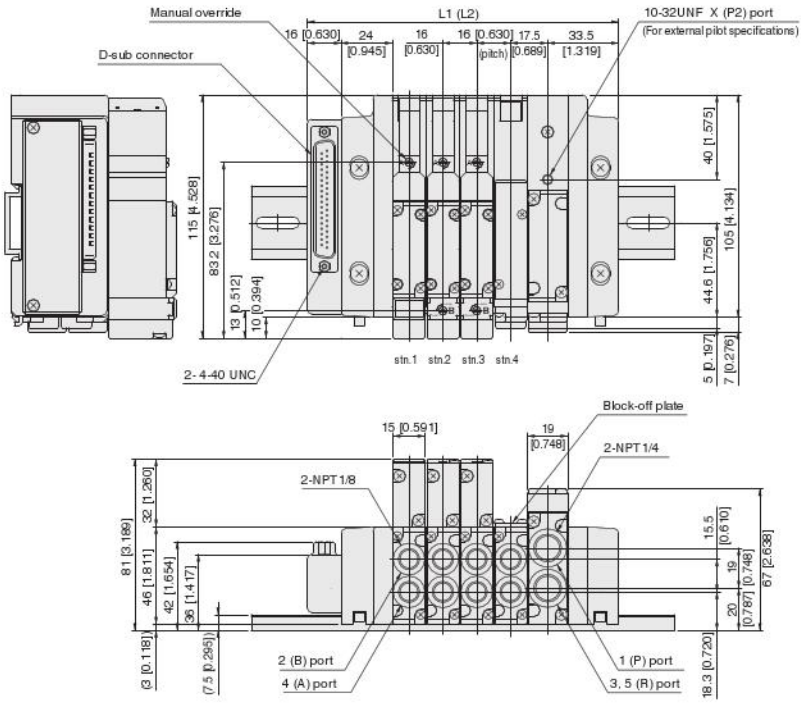


### Unit dimensions

| Number of units | L1 | Length of DIN rail | L2 Note | Length of DIN rail Note |
|---|---|---|---|---|
| 2 | 115 [4.528] | 150 [5.906] | 134 [5.276] | 175 [6.890] |
| 3 | 131 [5.157] | 175 [6.890] | 150 [5.906] | 200 [7.874] |
| 4 | 147 [5.787] | 200 [7.874] | 166 [6.535] | 200 [7.874] |
| 5 | 163 [6.417] | 200 [7.874] | 182 [7.165] | 225 [8.858] |
| 6 | 179 [7.047] | 225 [8.858] | 198 [7.795] | 250 [9.843] |
| 7 | 195 [7.677] | 250 [9.843] | 214 [8.425] | 250 [9.843] |
| 8 | 211 [8.307] | 250 [9.843] | 230 [9.055] | 275 [10.827] |
| 9 | 227 [8.937] | 275 [10.827] | 246 [9.685] | 300 [11.811] |
| 10 | 243 [9.567] | 300 [11.811] | 262 [10.315] | 300 [11.811] |
| 11 | 259 [10.197] | 300 [11.811] | 278 [10.945] | 325 [12.795] |
| 12 | 275 [10.827] | 325 [12.795] | 294 [11.575] | 350 [13.780] |
| 13 | 291 [11.457] | 325 [12.795] | 310 [12.205] | 350 [13.780] |
| 14 | 307 [12.087] | 350 [13.780] | 326 [12.835] | 375 [14.764] |
| 15 | 323 [12.717] | 375 [14.764] | 342 [13.465] | 375 [14.764] |
| 16 | 339 [13.346] | 375 [14.764] | 358 [14.094] | 400 [15.748] |
| 17 | 355 [13.976] | 400 [15.748] | 374 [14.724] | 425 [16.732] |
| 18 | 371 [14.606] | 425 [16.732] | 390 [15.354] | 425 [16.732] |
| 19 | 387 [15.236] | 425 [16.732] | 406 [15.984] | 450 [17.717] |
| 20 | 403 [15.866] | 450 [17.717] | 422 [16.614] | 475 [18.701] |

Note: When two piping blocks are used.

* For right-side mounting wiring (-R), add 3 mm [0.118 in] to the L1 (L2) dimension.

## F15M Number of valves PH Pilot specifications (Base piping type)

With valve outlet port female thread block
D-sub connector 37-pin specifications

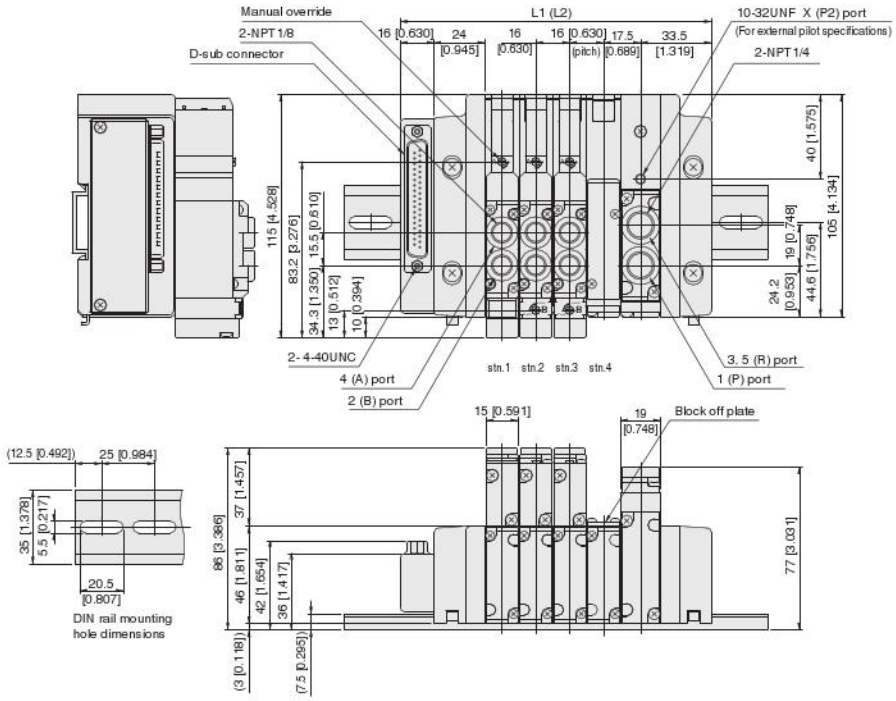


### Unit dimensions

| Number of units | L1 | Length of DIN rail | L2 Note | Length of DIN rail Note |
|---|---|---|---|---|
| 2 | 115 [4.528] | 150 [5.906] | 134 [5.276] | 175 [6.890] |
| 3 | 131 [5.157] | 175 [6.890] | 150 [5.906] | 200 [7.874] |
| 4 | 147 [5.787] | 200 [7.874] | 166 [6.535] | 200 [7.874] |
| 5 | 163 [6.417] | 200 [7.874] | 182 [7.165] | 225 [8.858] |
| 6 | 179 [7.047] | 225 [8.858] | 198 [7.795] | 250 [9.843] |
| 7 | 195 [7.677] | 250 [9.843] | 214 [8.425] | 250 [9.843] |
| 8 | 211 [8.307] | 250 [9.843] | 230 [9.055] | 275 [10.827] |
| 9 | 227 [8.937] | 275 [10.827] | 246 [9.685] | 300 [11.811] |
| 10 | 243 [9.567] | 300 [11.811] | 262 [10.315] | 300 [11.811] |
| 11 | 259 [10.197] | 300 [11.811] | 278 [10.945] | 325 [12.795] |
| 12 | 275 [10.827] | 325 [12.795] | 294 [11.575] | 350 [13.780] |
| 13 | 291 [11.457] | 325 [12.795] | 310 [12.205] | 350 [13.780] |
| 14 | 307 [12.087] | 350 [13.780] | 326 [12.835] | 375 [14.764] |
| 15 | 323 [12.717] | 375 [14.764] | 342 [13.465] | 375 [14.764] |
| 16 | 339 [13.346] | 375 [14.764] | 358 [14.094] | 400 [15.748] |
| 17 | 355 [13.976] | 400 [15.748] | 374 [14.724] | 425 [16.732] |
| 18 | 371 [14.606] | 425 [16.732] | 390 [15.354] | 425 [16.732] |
| 19 | 387 [15.236] | 425 [16.732] | 406 [15.984] | 450 [17.717] |
| 20 | 403 [15.866] | 450 [17.717] | 422 [16.614] | 475 [18.701] |

Note: When two piping blocks are used.

* For right-side mounting wiring (-R), add 3 mm [0.118 in] to the L1 (L2) dimension.

## F15M Number of valves PHL Pilot specifications (Base piping type)

With manifold outlet port female thread block
Terminal block type

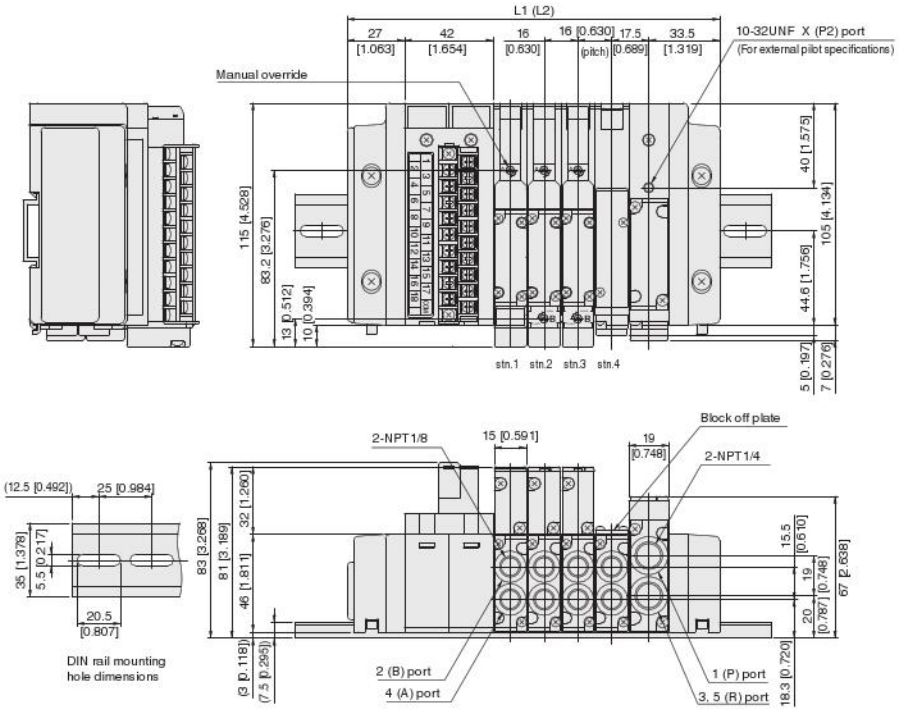


### Unit dimensions

| Number of units | L1 | Length of DIN rail | L2 Note | Length of DIN rail Note |
|---|---|---|---|---|
| 2 | 144 [5.669] | 175 [6.890] | 163 [6.417] | 200 [7.874] |
| 3 | 160 [6.299] | 200 [7.874] | 179 [7.047] | 225 [8.858] |
| 4 | 176 [6.929] | 225 [8.858] | 195 [7.677] | 225 [8.858] |
| 5 | 192 [7.559] | 225 [8.858] | 211 [8.307] | 250 [9.843] |
| 6 | 208 [8.189] | 250 [9.843] | 227 [8.937] | 275 [10.827] |
| 7 | 224 [8.819] | 250 [9.843] | 243 [9.567] | 275 [10.827] |
| 8 | 240 [9.449] | 275 [10.827] | 259 [10.197] | 300 [11.811] |
| 9 | 256 [10.079] | 300 [11.811] | 275 [10.827] | 300 [11.811] |
| 10 | 272 [10.709] | 300 [11.811] | 291 [11.457] | 325 [12.795] |
| 11 | 288 [11.339] | 325 [12.795] | 307 [12.087] | 350 [13.780] |
| 12 | 304 [11.969] | 350 [13.780] | 323 [12.717] | 350 [13.780] |
| 13 | 320 [12.598] | 350 [13.780] | 339 [13.346] | 375 [14.764] |
| 14 | 336 [13.228] | 375 [14.764] | 355 [13.976] | 400 [15.748] |
| 15 | 352 [13.858] | 400 [15.748] | 371 [14.606] | 400 [15.748] |
| 16 | 368 [14.488] | 400 [15.748] | 387 [15.236] | 425 [16.732] |
| 17 | 384 [15.118] | 425 [16.732] | 403 [15.866] | 450 [17.717] |
| 18 | 400 [15.748] | 425 [16.732] | 419 [16.496] | 450 [17.717] |

Note: When two piping blocks are used.

## F15M Number of valves PH Pilot specifications (Direct piping type)

With valve outlet port female thread block
Terminal block type

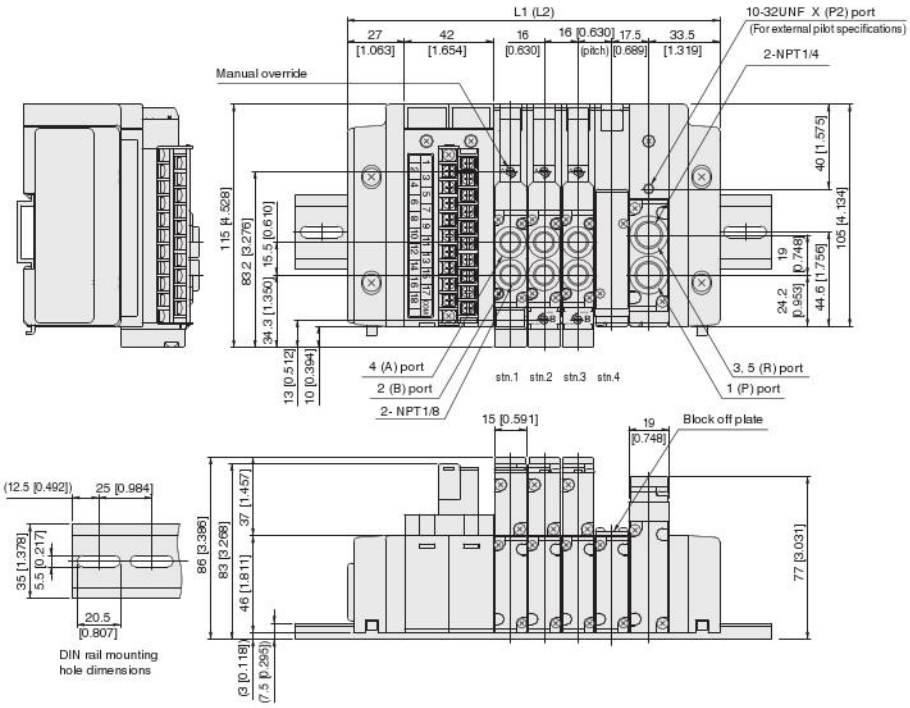


### Unit dimensions

| Number of units | L1 | Length of DIN rail | L2 Note | Length of DIN rail Note |
|---|---|---|---|---|
| 2 | 144 [5.669] | 175 [6.890] | 163 [6.417] | 200 [7.874] |
| 3 | 160 [6.299] | 200 [7.874] | 179 [7.047] | 225 [8.858] |
| 4 | 176 [6.929] | 225 [8.858] | 195 [7.677] | 225 [8.858] |
| 5 | 192 [7.559] | 225 [8.858] | 211 [8.307] | 250 [9.843] |
| 6 | 208 [8.189] | 250 [9.843] | 227 [8.937] | 275 [10.827] |
| 7 | 224 [8.819] | 250 [9.843] | 243 [9.567] | 275 [10.827] |
| 8 | 240 [9.449] | 275 [10.827] | 259 [10.197] | 300 [11.811] |
| 9 | 256 [10.079] | 300 [11.811] | 275 [10.827] | 300 [11.811] |
| 10 | 272 [10.709] | 300 [11.811] | 291 [11.457] | 325 [12.795] |
| 11 | 288 [11.339] | 325 [12.795] | 307 [12.087] | 350 [13.780] |
| 12 | 304 [11.969] | 350 [13.780] | 323 [12.717] | 350 [13.780] |
| 13 | 320 [12.598] | 350 [13.780] | 339 [13.346] | 375 [14.764] |
| 14 | 336 [13.228] | 375 [14.764] | 355 [13.976] | 400 [15.748] |
| 15 | 352 [13.858] | 400 [15.748] | 371 [14.606] | 400 [15.748] |
| 16 | 368 [14.488] | 400 [15.748] | 387 [15.236] | 425 [16.732] |
| 17 | 384 [15.118] | 425 [16.732] | 403 [15.866] | 450 [17.717] |
| 18 | 400 [15.748] | 425 [16.732] | 419 [16.496] | 450 [17.717] |

Note: When two piping blocks are used.

## F15M [Number of valves] S J/M/L [Pilot specifications] (Base piping type)

With manifold outlet port dual use fitting block

(Models that support integrated serial transmission block)

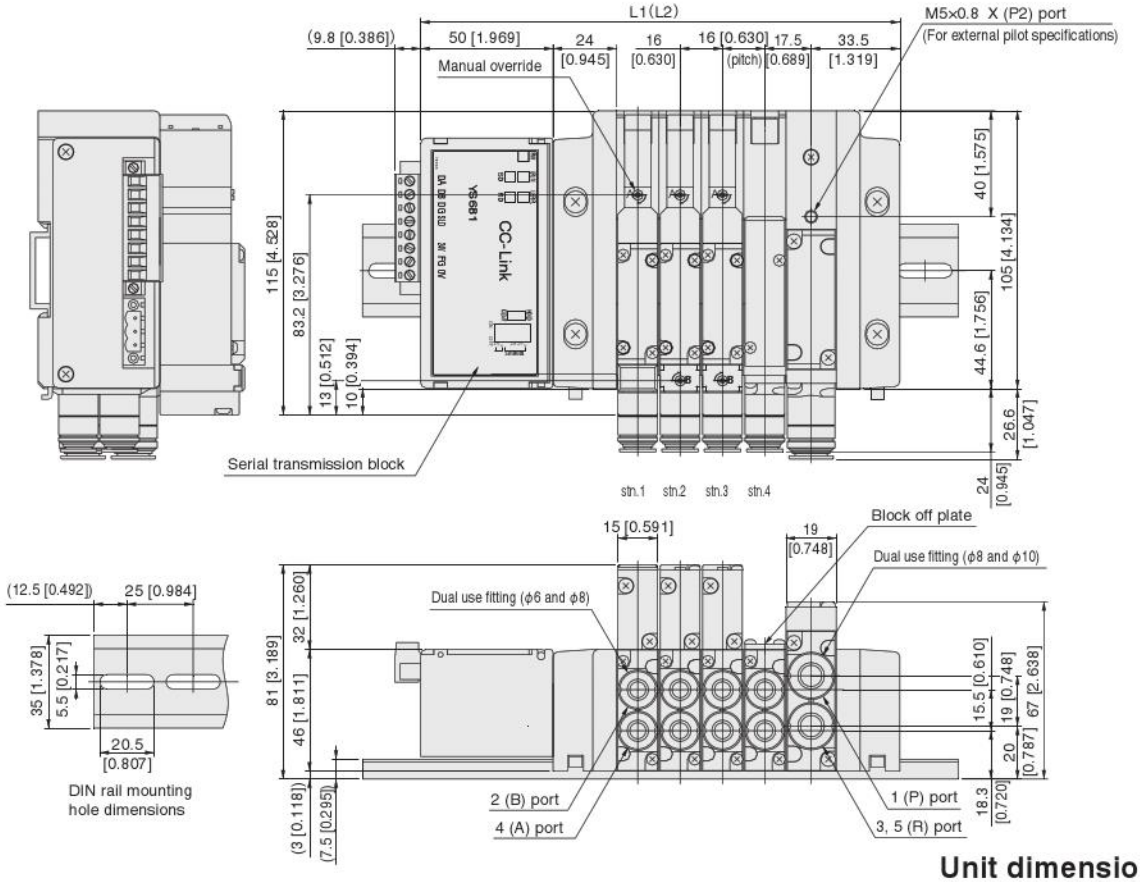


## Unit dimensions

| Number of units | L1 | Length of DIN rail | L2 Note | Length of DIN rail Note |
|---|---|---|---|---|
| 2 | 149 [5.866] | 200 [7.874] | 168 [6.614] | 225 [8.858] |
| 3 | 165 [6.496] | 225 [8.858] | 184 [7.244] | 225 [8.858] |
| 4 | 181 [7.126] | 225 [8.858] | 200 [7.874] | 250 [9.843] |
| 5 | 197 [7.756] | 250 [9.843] | 216 [8.504] | 275 [10.827] |
| 6 | 213 [8.386] | 275 [10.827] | 232 [9.134] | 275 [10.827] |
| 7 | 229 [9.016] | 275 [10.827] | 248 [9.764] | 300 [11.811] |
| 8 | 245 [9.646] | 300 [11.811] | 264 [10.394] | 325 [12.795] |
| 9 | 261 [10.276] | 325 [12.795] | 280 [11.024] | 325 [12.795] |
| 10 | 277 [10.906] | 325 [12.795] | 296 [11.654] | 350 [13.780] |
| 11 | 293 [11.535] | 350 [13.780] | 312 [12.283] | 375 [14.764] |
| 12 | 309 [12.165] | 350 [13.780] | 328 [12.913] | 375 [14.764] |
| 13 | 325 [12.795] | 375 [14.764] | 344 [13.543] | 400 [15.748] |
| 14 | 341 [13.425] | 400 [15.748] | 360 [14.173] | 400 [15.748] |
| 15 | 357 [14.055] | 400 [15.748] | 376 [14.803] | 425 [16.732] |
| 16 | 373 [14.685] | 425 [16.732] | 392 [15.433] | 450 [17.717] |
| 17 | 389 [15.315] | 450 [17.717] | 408 [16.063] | 475 [18.701] |
| 18 | 405 [15.945] | 450 [17.717] | 424 [16.693] | 475 [18.701] |
| 19 | 421 [16.575] | 475 [18.701] | 440 [17.323] | 500 [19.685] |
| 20 | 437 [17.205] | 500 [19.685] | 456 [17.953] | 500 [19.685] |

Note: When two piping blocks are used.

* For right-side mounting wiring (-R), add 3 mm [0.118 in] to the L1 (L2) dimension.

## F15M Number of valves SHL Pilot specifications (Base piping type)

With manifold outlet port female thread block

(Models that support integrated serial transmission block)

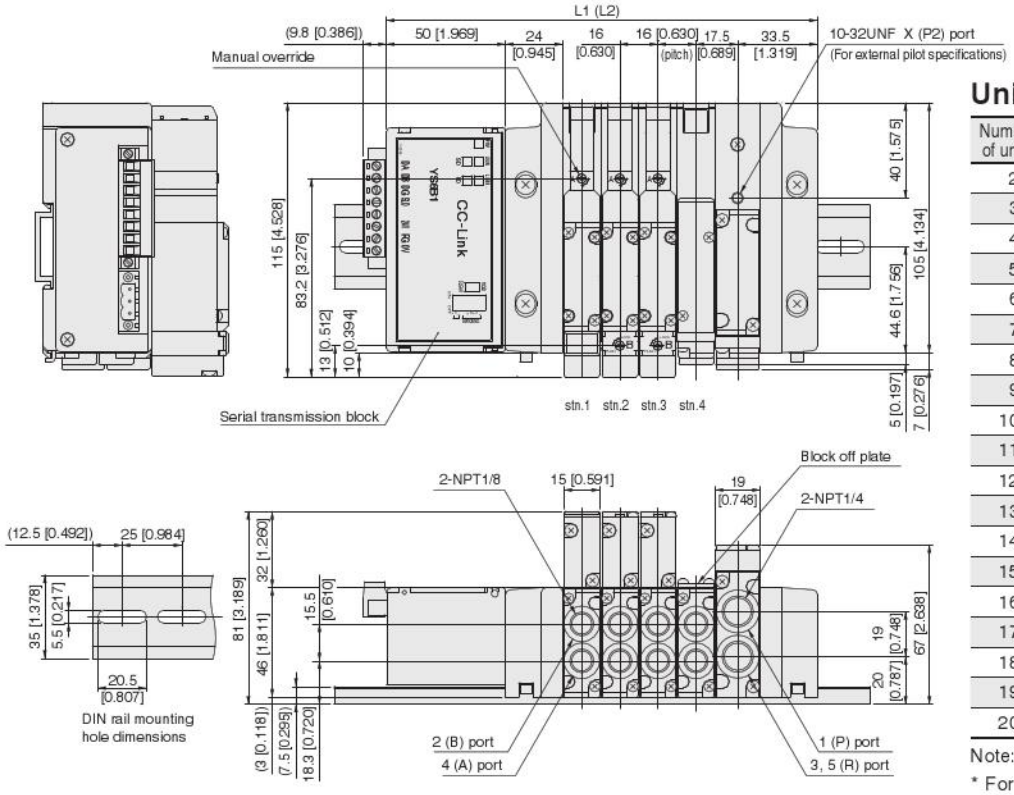


### Unit dimensions

| Number of units | L1 | Length of DIN rail | L2 Note | Length of DIN rail Note |
|---|---|---|---|---|
| 2 | 149 [5.866] | 200 [7.874] | 168 [6.614] | 225 [8.858] |
| 3 | 165 [6.496] | 225 [8.858] | 184 [7.244] | 225 [8.858] |
| 4 | 181 [7.126] | 225 [8.858] | 200 [7.874] | 250 [9.843] |
| 5 | 197 [7.756] | 250 [9.843] | 216 [8.504] | 275 [10.827] |
| 6 | 213 [8.386] | 275 [10.827] | 232 [9.134] | 275 [10.827] |
| 7 | 229 [9.016] | 275 [10.827] | 248 [9.764] | 300 [11.811] |
| 8 | 245 [9.646] | 300 [11.811] | 264 [10.394] | 325 [12.795] |
| 9 | 261 [10.276] | 325 [12.795] | 280 [11.024] | 325 [12.795] |
| 10 | 277 [10.906] | 325 [12.795] | 296 [11.654] | 350 [13.780] |
| 11 | 293 [11.535] | 350 [13.780] | 312 [12.283] | 375 [14.764] |
| 12 | 309 [12.165] | 350 [13.780] | 328 [12.913] | 375 [14.764] |
| 13 | 325 [12.795] | 375 [14.764] | 344 [13.543] | 400 [15.748] |
| 14 | 341 [13.425] | 400 [15.748] | 360 [14.173] | 400 [15.748] |
| 15 | 357 [14.055] | 400 [15.748] | 376 [14.803] | 425 [16.732] |
| 16 | 373 [14.685] | 425 [16.732] | 392 [15.433] | 450 [17.717] |
| 17 | 389 [15.315] | 450 [17.717] | 408 [16.063] | 475 [18.701] |
| 18 | 405 [15.945] | 450 [17.717] | 424 [16.693] | 475 [18.701] |
| 19 | 421 [16.575] | 475 [18.701] | 440 [17.323] | 500 [19.685] |
| 20 | 437 [17.205] | 500 [19.685] | 456 [17.953] | 500 [19.685] |

Note: When two piping blocks are used.

* For right-side mounting wiring (-R), add 3 mm [0.118 in] to the L1 (L2) dimension.

## F15M Number of valves SH Pilot specifications (Direct piping type)

With valve outlet port female thread block

(Models that support integrated serial transmission block)

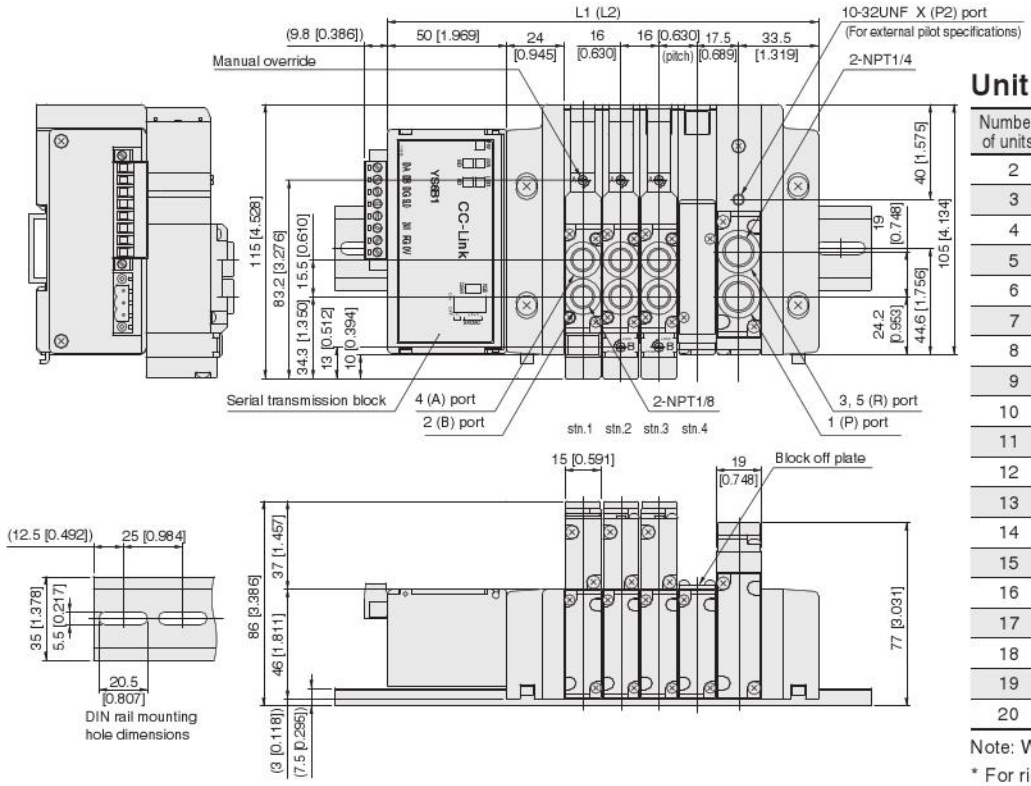


### Unit dimensions

| Number of units | L1 | Length of DIN rail | L2 Note | Length of DIN rail Note |
|---|---|---|---|---|
| 2 | 149 [5.866] | 200 [7.874] | 168 [6.614] | 225 [8.858] |
| 3 | 165 [6.496] | 225 [8.858] | 184 [7.244] | 225 [8.858] |
| 4 | 181 [7.126] | 225 [8.858] | 200 [7.874] | 250 [9.843] |
| 5 | 197 [7.756] | 250 [9.843] | 216 [8.504] | 275 [10.827] |
| 6 | 213 [8.386] | 275 [10.827] | 232 [9.134] | 275 [10.827] |
| 7 | 229 [9.016] | 275 [10.827] | 248 [9.764] | 300 [11.811] |
| 8 | 245 [9.646] | 300 [11.811] | 264 [10.394] | 325 [12.795] |
| 9 | 261 [10.276] | 325 [12.795] | 280 [11.024] | 325 [12.795] |
| 10 | 277 [10.906] | 325 [12.795] | 296 [11.654] | 350 [13.780] |
| 11 | 293 [11.535] | 350 [13.780] | 312 [12.283] | 375 [14.764] |
| 12 | 309 [12.165] | 350 [13.780] | 328 [12.913] | 375 [14.764] |
| 13 | 325 [12.795] | 375 [14.764] | 344 [13.543] | 400 [15.748] |
| 14 | 341 [13.425] | 400 [15.748] | 360 [14.173] | 400 [15.748] |
| 15 | 357 [14.055] | 400 [15.748] | 376 [14.803] | 425 [16.732] |
| 16 | 373 [14.685] | 425 [16.732] | 392 [15.433] | 450 [17.717] |
| 17 | 389 [15.315] | 450 [17.717] | 408 [16.063] | 475 [18.701] |
| 18 | 405 [15.945] | 450 [17.717] | 424 [16.693] | 475 [18.701] |
| 19 | 421 [16.575] | 475 [18.701] | 440 [17.323] | 500 [19.685] |
| 20 | 437 [17.205] | 500 [19.685] | 456 [17.953] | 500 [19.685] |

Note: When two piping blocks are used.

* For right-side mounting wiring (-R), add 3 mm [0.118 in] to the L1 (L2) dimension.

## F15M [Number of valves] S J/M/L [Pilot specifications] (Base piping type)

With manifold outlet port dual use fitting block

(Models that support stand-alone serial transmission block)

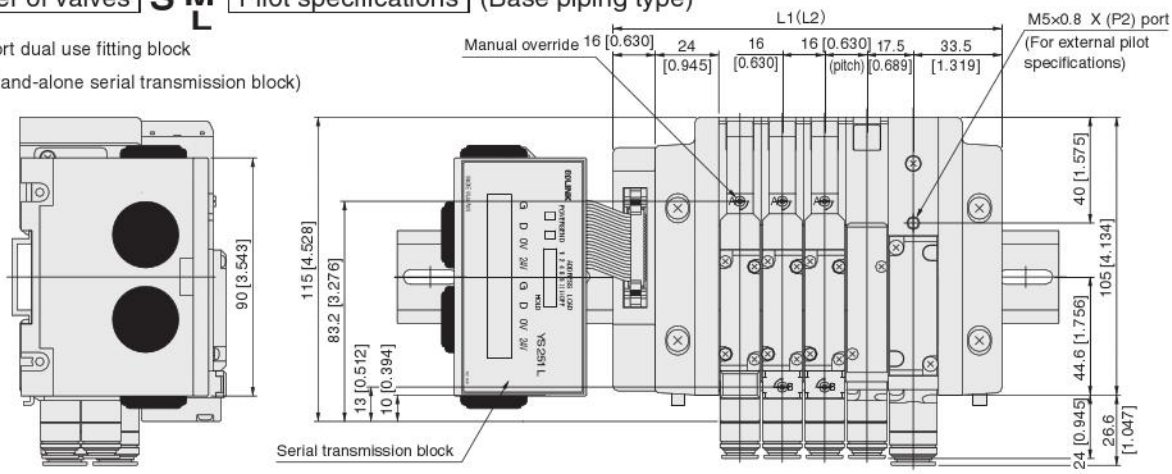


## Unit dimensions

| Number of units | L1 | Length of DIN rail | L2 Note | Length of DIN rail Note |
|---|---|---|---|---|
| 2 | 115 [4.528] | 225 [8.858] | 134 [5.276] | 225 [8.858] |
| 3 | 131 [5.157] | 225 [8.858] | 150 [5.906] | 250 [9.843] |
| 4 | 147 [5.787] | 250 [9.843] | 166 [6.535] | 275 [10.827] |
| 5 | 163 [6.417] | 275 [10.827] | 182 [7.165] | 275 [10.827] |
| 6 | 179 [7.047] | 275 [10.827] | 198 [7.795] | 300 [11.811] |
| 7 | 195 [7.677] | 300 [11.811] | 214 [8.425] | 325 [12.795] |
| 8 | 211 [8.307] | 300 [11.811] | 230 [9.055] | 325 [12.795] |
| 9 | 227 [8.937] | 325 [12.795] | 246 [9.685] | 350 [13.780] |
| 10 | 243 [9.567] | 350 [13.780] | 262 [10.315] | 375 [14.764] |
| 11 | 259 [10.197] | 350 [13.780] | 278 [10.945] | 375 [14.764] |
| 12 | 275 [10.827] | 375 [14.764] | 294 [11.575] | 400 [15.748] |
| 13 | 291 [11.457] | 400 [15.748] | 310 [12.205] | 400 [15.748] |
| 14 | 307 [12.087] | 400 [15.748] | 326 [12.835] | 425 [16.732] |
| 15 | 323 [12.717] | 425 [16.732] | 342 [13.465] | 450 [17.717] |
| 16 | 339 [13.346] | 450 [17.717] | 358 [14.094] | 450 [17.717] |

Note: When two piping blocks are used.

* For right-side mounting wiring (-R), add 3 mm [0.118 in] to the L1 (L2) dimension.

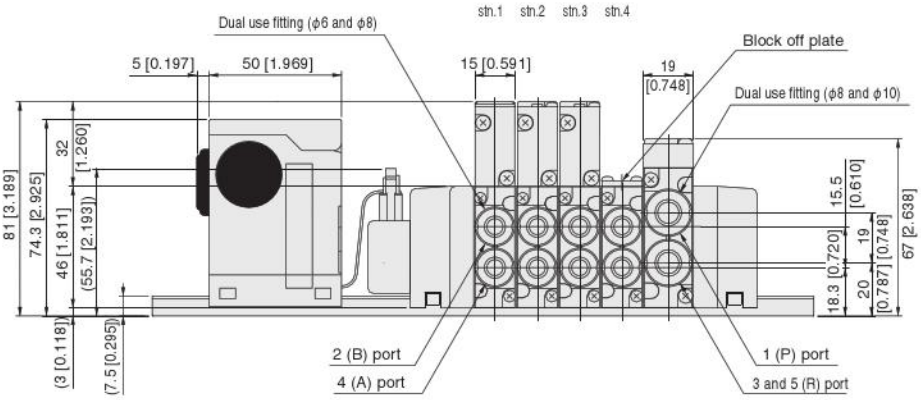


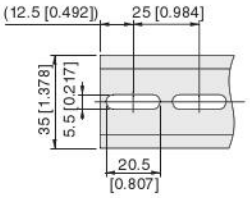


DIN rail mounting hole dimensions

## Additional Parts (available separately)

●Muffler: **KM-J10** [for both plug-in and non-plug-in ]

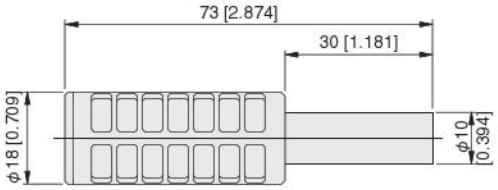


●Muffler: **KM-J6** [for individual exhaust spacer only]

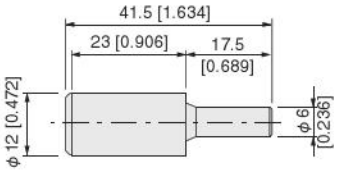


●Muffler: **KM-J8** [for individual exhaust spacer only]

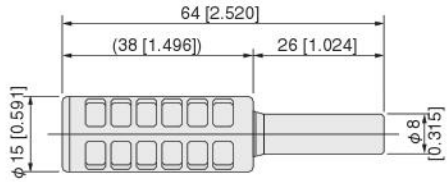


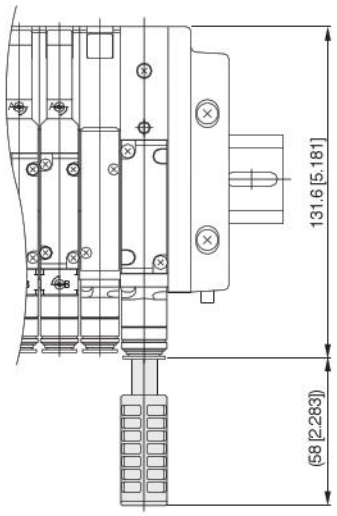

## F15M Number of valves SHL Pilot specifications (Base piping type)

With manifold outlet port female thread block

(Models that support stand-alone serial transmission block)

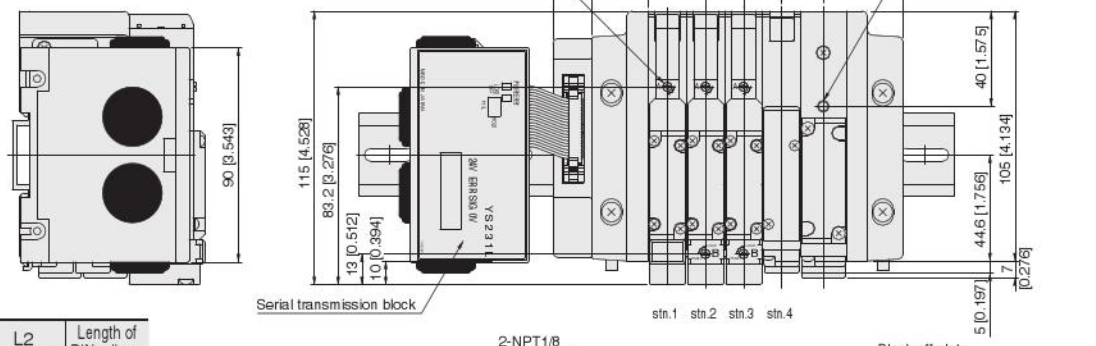


### Unit dimensions

| Number of units | L1 | Length of DIN rail | L2 Note | Length of DIN rail Note |
|---|---|---|---|---|
| 2 | 115 [4.528] | 225 [8.858] | 134 [5.276] | 225 [8.858] |
| 3 | 131 [5.157] | 225 [8.858] | 150 [5.906] | 250 [9.843] |
| 4 | 147 [5.787] | 250 [9.843] | 166 [6.535] | 275 [10.827] |
| 5 | 163 [6.417] | 275 [10.827] | 182 [7.165] | 275 [10.827] |
| 6 | 179 [7.047] | 275 [10.827] | 198 [7.795] | 300 [11.811] |
| 7 | 195 [7.677] | 300 [11.811] | 214 [8.425] | 325 [12.795] |
| 8 | 211 [8.307] | 300 [11.811] | 230 [9.055] | 325 [12.795] |
| 9 | 227 [8.937] | 325 [12.795] | 246 [9.685] | 350 [13.780] |
| 10 | 243 [9.567] | 350 [13.780] | 262 [10.315] | 375 [14.764] |
| 11 | 259 [10.197] | 350 [13.780] | 278 [10.945] | 375 [14.764] |
| 12 | 275 [10.827] | 375 [14.764] | 294 [11.575] | 400 [15.748] |
| 13 | 291 [11.457] | 400 [15.748] | 310 [12.205] | 400 [15.748] |
| 14 | 307 [12.087] | 400 [15.748] | 326 [12.835] | 425 [16.732] |
| 15 | 323 [12.717] | 425 [16.732] | 342 [13.465] | 450 [17.717] |
| 16 | 339 [13.346] | 450 [17.717] | 358 [14.094] | 450 [17.717] |

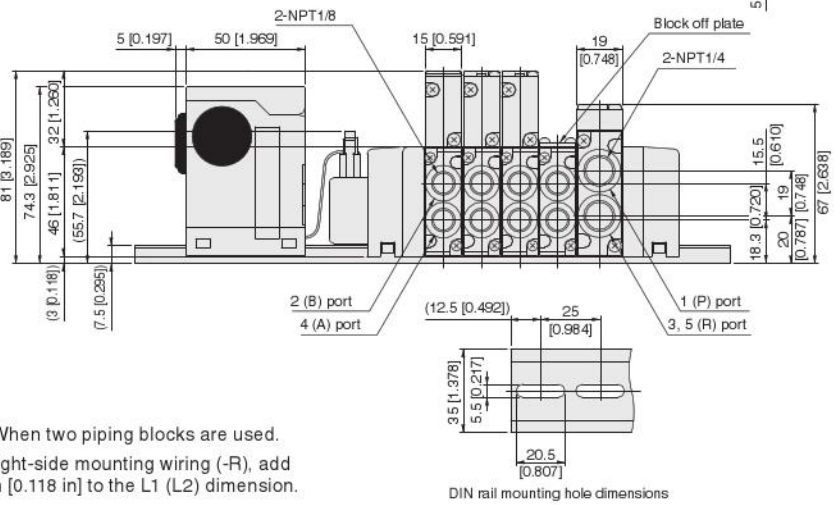


Note: When two piping blocks are used.

* For right-side mounting wiring (-R), add 3 mm [0.118 in] to the L1 (L2) dimension.

## F15M Number of valves SH Pilot specifications (Direct piping type)

With valve outlet port female thread block

(Models that support stand-alone serial transmission block)

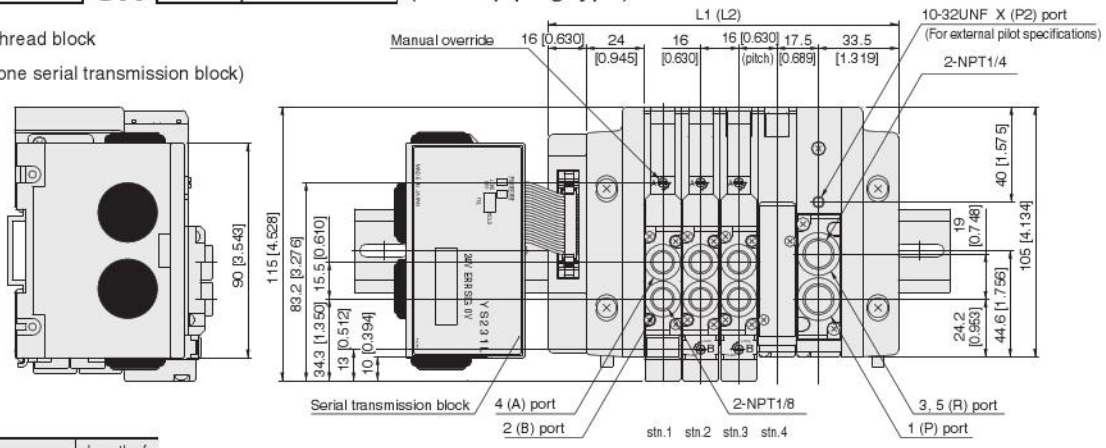


### Unit dimensions

| Number of units | L1 | Length of DIN rail | L2 Note | Length of DIN rail Note |
|---|---|---|---|---|
| 2 | 115 [4.528] | 225 [8.858] | 134 [5.276] | 225 [8.858] |
| 3 | 131 [5.157] | 225 [8.858] | 150 [5.906] | 250 [9.843] |
| 4 | 147 [5.787] | 250 [9.843] | 166 [6.535] | 275 [10.827] |
| 5 | 163 [6.417] | 275 [10.827] | 182 [7.165] | 275 [10.827] |
| 6 | 179 [7.047] | 275 [10.827] | 198 [7.795] | 300 [11.811] |
| 7 | 195 [7.677] | 300 [11.811] | 214 [8.425] | 325 [12.795] |
| 8 | 211 [8.307] | 300 [11.811] | 230 [9.055] | 325 [12.795] |
| 9 | 227 [8.937] | 325 [12.795] | 246 [9.685] | 350 [13.780] |
| 10 | 243 [9.567] | 350 [13.780] | 262 [10.315] | 375 [14.764] |
| 11 | 259 [10.197] | 350 [13.780] | 278 [10.945] | 375 [14.764] |
| 12 | 275 [10.827] | 375 [14.764] | 294 [11.575] | 400 [15.748] |
| 13 | 291 [11.457] | 400 [15.748] | 310 [12.205] | 400 [15.748] |
| 14 | 307 [12.087] | 400 [15.748] | 326 [12.835] | 425 [16.732] |
| 15 | 323 [12.717] | 425 [16.732] | 342 [13.465] | 450 [17.717] |
| 16 | 339 [13.346] | 450 [17.717] | 358 [14.094] | 450 [17.717] |

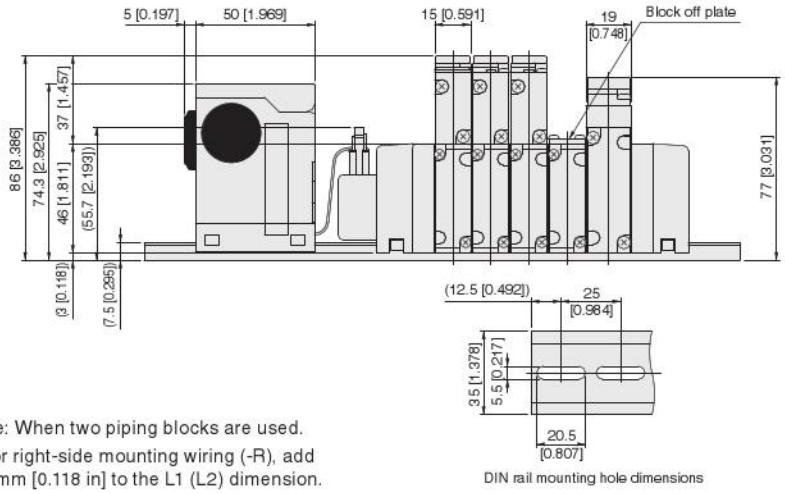


Note: When two piping blocks are used.

* For right-side mounting wiring (-R), add 3 mm [0.118 in] to the L1 (L2) dimension.

## F15M Number of valves SHL Pilot specifications (Base piping type)

With manifold outlet port female thread block

(EtherCAT)
(EtherNet/IP) ※ The dimensions is EtherCAT.

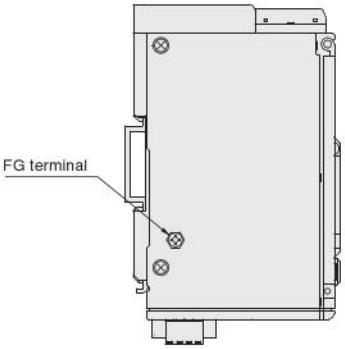


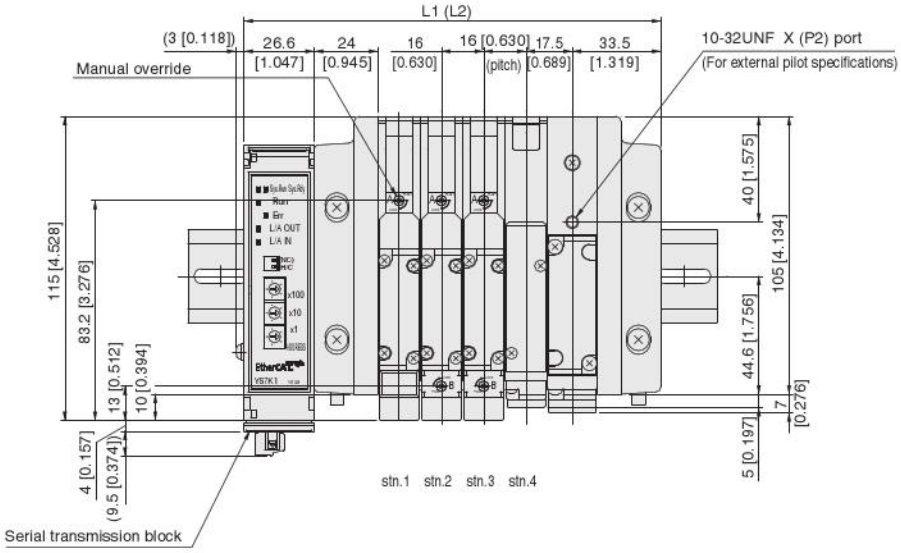


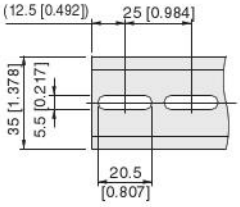


DIN rail mounting hole dimensions

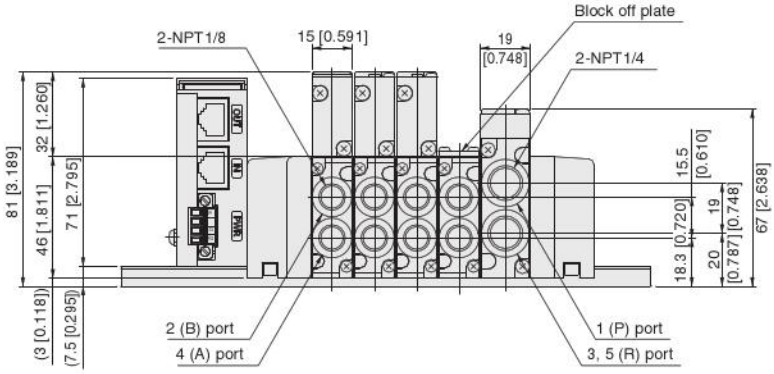


## Unit dimensions

| Number of units | L1 | Length of DIN rail | L2 Note | Length of DIN rail Note |
|---|---|---|---|---|
| 2 | 125.6 [4.945] | 175 [6.890] | 144.6 [5.693] | 200 [7.874] |
| 3 | 141.6 [5.575] | 200 [7.874] | 160.6 [6.323] | 200 [7.874] |
| 4 | 157.6 [6.205] | 200 [7.874] | 176.6 [6.953] | 225 [8.858] |
| 5 | 173.6 [6.835] | 225 [8.858] | 192.6 [7.583] | 250 [9.843] |
| 6 | 189.6 [7.465] | 250 [9.843] | 208.6 [8.213] | 250 [9.843] |
| 7 | 205.6 [8.094] | 250 [9.843] | 224.6 [8.843] | 275 [10.827] |
| 8 | 221.6 [8.724] | 275 [10.827] | 240.6 [9.472] | 300 [11.811] |
| 9 | 237.6 [9.354] | 300 [11.811] | 256.6 [10.102] | 300 [11.811] |
| 10 | 253.6 [9.984] | 300 [11.811] | 272.6 [10.732] | 325 [12.795] |
| 11 | 269.6 [10.614] | 325 [12.795] | 288.6 [11.362] | 350 [13.780] |
| 12 | 285.6 [11.244] | 325 [12.795] | 304.6 [11.992] | 350 [13.780] |
| 13 | 301.6 [11.874] | 350 [13.780] | 320.6 [12.622] | 375 [14.764] |
| 14 | 317.6 [12.504] | 375 [14.764] | 336.6 [13.252] | 375 [14.764] |
| 15 | 333.6 [13.134] | 375 [14.764] | 352.6 [13.882] | 400 [15.748] |
| 16 | 349.6 [13.764] | 400 [15.748] | 368.6 [14.512] | 425 [16.732] |
| 17 | 365.6 [14.394] | 425 [16.732] | 384.6 [15.142] | 450 [17.717] |
| 18 | 381.6 [15.024] | 425 [16.732] | 400.6 [15.772] | 450 [17.717] |
| 19 | 397.6 [15.654] | 450 [17.717] | 416.6 [16.402] | 475 [18.701] |
| 20 | 413.6 [16.283] | 475 [18.701] | 432.6 [17.031] | 475 [18.701] |

Note: When two piping blocks are used.

* For right-side mounting wiring (-R), add 3 mm [0.118 in] to the L1 (L2) dimension.

## F15M Number of valves SH Pilot specifications (Direct piping type)

With valve outlet port female thread block

(EtherCAT)
(EtherNet/IP) ※ The dimensions is EtherCAT.

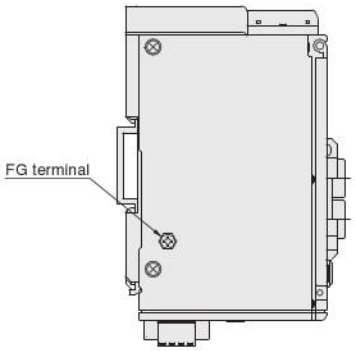


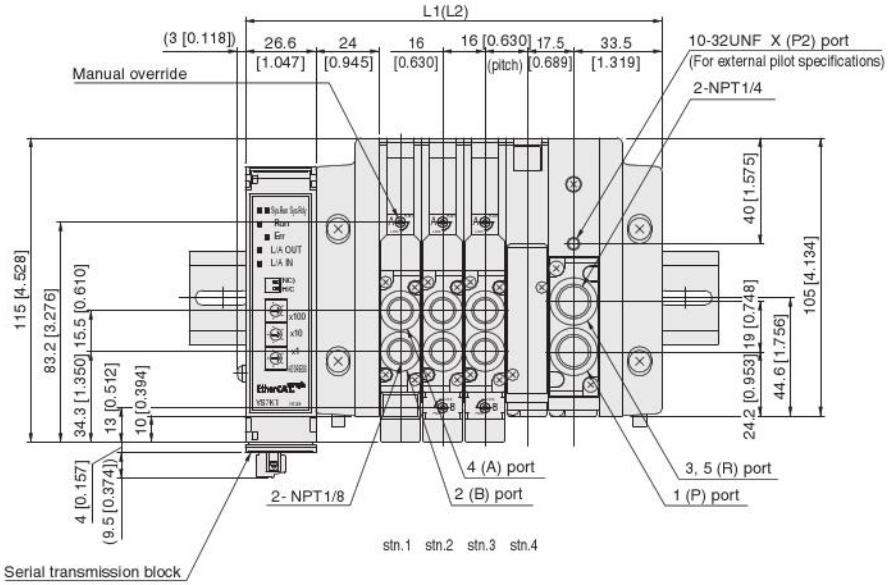


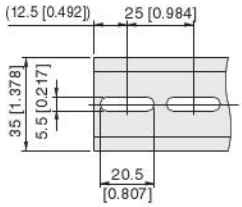


DIN rail mounting hole dimensions

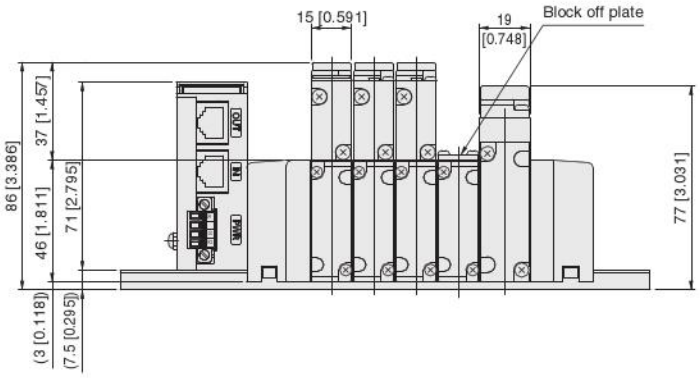


## Unit dimensions

| Number of units | L1 | Length of DIN rail | L2 Note | Length of DIN rail Note |
|---|---|---|---|---|
| 2 | 125.6 [4.945] | 175 [6.890] | 144.6 [5.693] | 200 [7.874] |
| 3 | 141.6 [5.575] | 200 [7.874] | 160.6 [6.323] | 200 [7.874] |
| 4 | 157.6 [6.205] | 200 [7.874] | 176.6 [6.953] | 225 [8.858] |
| 5 | 173.6 [6.835] | 225 [8.858] | 192.6 [7.583] | 250 [9.843] |
| 6 | 189.6 [7.465] | 250 [9.843] | 208.6 [8.213] | 250 [9.843] |
| 7 | 205.6 [8.094] | 250 [9.843] | 224.6 [8.843] | 275 [10.827] |
| 8 | 221.6 [8.724] | 275 [10.827] | 240.6 [9.472] | 300 [11.811] |
| 9 | 237.6 [9.354] | 300 [11.811] | 256.6 [10.102] | 300 [11.811] |
| 10 | 253.6 [9.984] | 300 [11.811] | 272.6 [10.732] | 325 [12.795] |
| 11 | 269.6 [10.614] | 325 [12.795] | 288.6 [11.362] | 350 [13.780] |
| 12 | 285.6 [11.244] | 325 [12.795] | 304.6 [11.992] | 350 [13.780] |
| 13 | 301.6 [11.874] | 350 [13.780] | 320.6 [12.622] | 375 [14.764] |
| 14 | 317.6 [12.504] | 375 [14.764] | 336.6 [13.252] | 375 [14.764] |
| 15 | 333.6 [13.134] | 375 [14.764] | 352.6 [13.882] | 400 [15.748] |
| 16 | 349.6 [13.764] | 400 [15.748] | 368.6 [14.512] | 425 [16.732] |
| 17 | 365.6 [14.394] | 425 [16.732] | 384.6 [15.142] | 450 [17.717] |
| 18 | 381.6 [15.024] | 425 [16.732] | 400.6 [15.772] | 450 [17.717] |
| 19 | 397.6 [15.654] | 450 [17.717] | 416.6 [16.402] | 475 [18.701] |
| 20 | 413.6 [16.283] | 475 [18.701] | 432.6 [17.031] | 475 [18.701] |

Note: When two piping blocks are used.

* For right-side mounting wiring (-R), add 3 mm [0.118 in] to the L1 (L2) dimension.

# SOLENOID VALVES
## F18 SERIES

## Contents


Specifications — 172

Dimensions of Single Valve Unit — 177

Dimensions of Monoblock Manifold — 180

Dimensions of Split Manifold Non-plug-in Type — 183

Dimensions of Split Manifold Plug-in Type — 185

Dimensions of Serial Transmission Compatible Manifold — 194


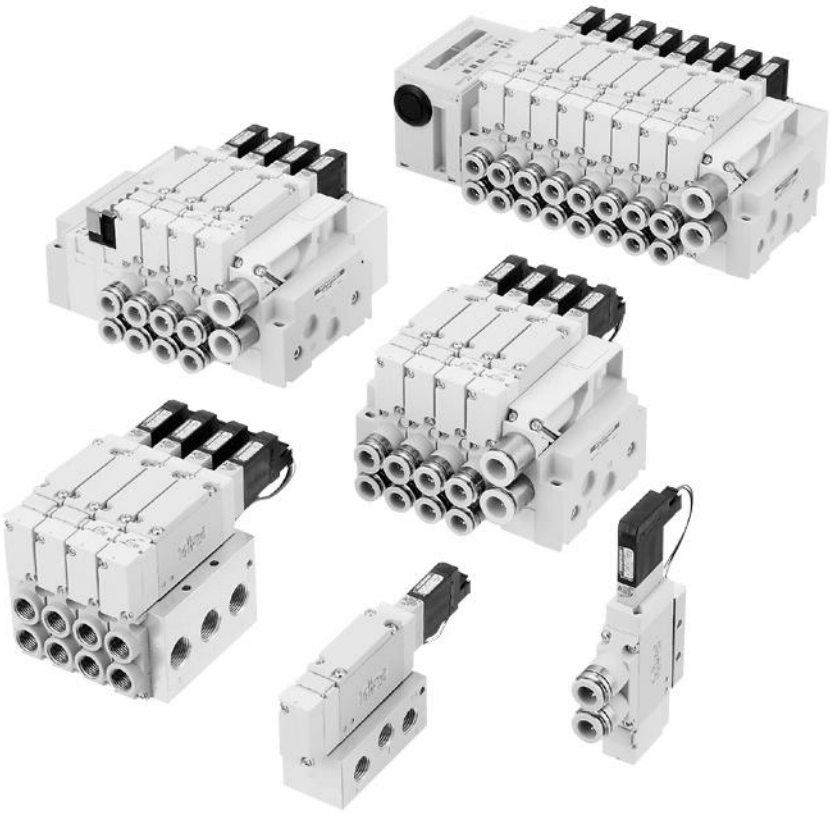

# F18 SERIES Specifications

## Specifications

### Basic Models and Valve Functions

| Item \ Basic model | F18T0 | F18T1<br>F18T2 | F18T3<br>F18T4<br>F18T5 |
|---|---|---|---|
| Number of positions | 2 positions | | 3 positions |
| Number of ports | 5 | | |
| Valve function | Single solenoid only | Both single and double solenoid use | Closed center, Exhaust center, Pressure center |

Remark: For the optional specifications and order codes, see p.72-88.

### Specifications

| Item \ Basic model | | F18T0<br>F18T1<br>F18T2 | F18T3<br>F18T4<br>F18T5 | F18T0G<br>F18T1G<br>F18T2G | F18T3G<br>F18T4G<br>F18T5G | F18T0V<br>F18T1V<br>F18T2V | F18T3V |
|---|---|---|---|---|---|---|---|
| Media | | Air | | | | | |
| Operation type | | Internal pilot type | | External pilot type (for positive pressure) | | External pilot type (for vacuum) | |
| Flow rate characteristics | Sonic conductance C dm³/(s・bar) Note1 | 3.6 | | | | | |
| | Effective area Note2 mm² (Cv) | 18 (1) | | | | | |
| Port size Note3 | | Dual use fitting for φ8 and φ10, Rc1/4, NPT1/4 | | M5×0.8, 10-32UNF, dual use fitting for φ8 and φ10, Rc1/4, NPT1/4 | | | |
| Lubrication | | Not required | | | | | |
| Operating pressure range | Main valve | 0.15～0.7 MPa [22～102 psi.] | | 0～0.7 MPa [0～102 psi.] Note4 | | –100 kPa～0.15 MPa [–29.53 in.Hg～22 psi.] | |
| | External pilot | —— | | 0.2～0.7 MPa [29～102 psi.] Note4 | | 0.2～0.7 MPa [29～102 psi.] | |
| Proof pressure MPa [psi.] | | 1.05 [152] | | | | | |
| Response time Note5 ON/OFF ms | 12VDC, 24VDC | 25/35 or below | 15/70 or below | 25/35 or below | 15/70 or below | 25/35 or below | 15/70 or below |
| | 100VAC | 25/35 or below | 15/70 or below | 25/35 or below | 15/70 or below | 25/35 or below | 15/70 or below |
| Maximum operating frequency Hz | | 5 | | | | | |
| Minimum time to energize for self holding Note6 ms | | 50 | —— | 50 | —— | 50 | —— |
| Operating temperature range (atmosphere and media) °C [°F] | | 5～50 [41～122] | | | | | |
| Shock resistance m/s² [G] | | 1373 [140]<br>(Axial direction 294.2 [30]) | 294.2 [30] | 1373 [140]<br>(Axial direction 294.2 [30]) | 294.2 [30] | 1373 [140]<br>(Axial direction 294.2 [30]) | 294.2 [30] |
| Mounting direction | | Any | | | | | |

Notes: 1. The sonic conductance value is a calculated value, and not a measured value.
2. For details, see the effective area on p.174.
3. For details, see the port size on p.174.
4. When the main valve pressure is 0.2～0.7 MPa [29～102 psi.], set the external pilot pressure to the main valve pressure or higher, and to 0.7 MPa [102 psi.] or less.
5. Values when air pressure is 0.5 MPa [73 psi.]. For switching phase timing in the AC specification, add a maximum of 5 ms to the response time. The values for 2-position valves are those when used as a single solenoid, and the values for 3-position valves are those when switching from the neutral position of closed center.
6. When used as a double solenoid valve. Excludes **T0**.

Remark: Specification values are based on Koganei test standards.

## Solenoid Specifications

| Item \ Rated voltage | | 12VDC | 24VDC | 100VAC | | 120VAC | |
|---|---|---|---|---|---|---|---|
| Voltage range V | | 10.8～13.2<br>(12±10%) | 21.6～26.4<br>(24±10%) | 90～110<br>(100±10%) | | 108～132<br>(120±10%) | |
| Rated frequency Hz | | —— | —— | 50 | 60 | 50 | 60 |
| Current (when rated voltage is applied) mA (r.m.s) | Starting | —— | —— | 10 Note 1 | 10 Note 1 | 11.8 | 11.8 |
| | Holding | 76 | 38 | 10 Note 1 | 10 Note 1 | 11.8 | 11.8 |
| Power consumption W | | 0.9 | 0.9 | 1.0 VA | | 1.4 VA | |
| Allowable leakage current mA | | 4.0 | 2.0 | 2.0 | | 2.0 | |
| Type of insulation | | Type B | | | | | |
| Insulation resistance Note 2 MΩ | | Over 100 | | | | | |
| Color of LED indicator Note3 | | 14(SA) : Red, 12(SB) : Green | 14(SA) : Red, 12(SB) : Green | 14(SA) : Red, 12(SB) : Green | | | |
| Surge suppression (as standard) | | Flywheel diode | | Bridge diode | | | |

Notes: 1. Since the AC types have built-in bridge diodes, the starting current and holding current values are virtually the same.
2. Value at 500VDC megger.
3. The color of the **T0** indicator is red only.

Remark: Specification values are based on Koganei test standards.

## Specifications for DIN Connector (-39□) Type

### Basic Models and Valve Functions

| Item \ Basic model | F18T0 | F18T2 | F18T3<br>F18T4<br>F18T5 |
|---|---|---|---|
| Number of positions | 2 positions | | 3 positions |
| Number of ports | 5 | | |
| Valve function | Single solenoid only | Double solenoid only | Closed center, Exhaust center, Pressure center |

Remark: For the optional specifications and order codes, see p.72-88.

### Specifications

| Item \ Basic model | | F18T0<br>F18T2 | F18T3<br>F18T4<br>F18T5 | F18T0G<br>F18T2G | F18T3G<br>F18T4G<br>F18T5G | F18T0V<br>F18T2V | F18T3V |
|---|---|---|---|---|---|---|---|
| Media | | Air | | | | | |
| Operation type | | Internal pilot type | | External pilot type (for positive pressure) | | External pilot type (for vacuum) | |
| Flow rate characteristics | Sonic conductance C $dm^3/(s \cdot bar)$ Note1 | 3.6 | | | | | |
| | Effective area Note2 $mm^2$ [Cv] | 18 [1] | | | | | |
| Port size Note3 | | Dual use fitting for φ8 and φ10, Rc1/4, NPT1/4 | | M5×0.8, 10-32UNF, dual use fitting for φ8 and φ10, Rc1/4, NPT1/4 | | | |
| Lubrication | | Not required | | | | | |
| Operating pressure range | Main valve | 0.15～0.7 MPa [22～102 psi.] | | 0～0.7 MPa [0～102 psi.] Note4 | | –100 kPa～0.15 MPa [–29.53 in.Hg～22 psi.] | |
| | External pilot | —— | | 0.2～0.7 MPa [29～102 psi.] Note4 | | 0.2～0.7 MPa [29～102 psi.] | |
| Proof pressure MPa [psi.] | | 1.05 [152] | | | | | |
| Response time Note5 ON/OFF ms | | 25/35 or below | 15/70 or below | 25/35 or below | 15/70 or below | 25/35 or below | 15/70 or below |
| Maximum operating frequency Hz | | 5 | | | | | |
| Minimum time to energize for self holding Note6 ms | | 50 | —— | 50 | —— | 50 | —— |
| Operating temperature range (atmosphere and media) °C [°F] | | 5～50 [41～122] | | | | | |
| Shock resistance $m/s^2$ [G] | | 1373 [140]<br>(Axial direction 294.2 [30]) | 294.2 [30] | 1373 [140]<br>(Axial direction 294.2 [30]) | 294.2 [30] | 1373 [140]<br>(Axial direction 294.2 [30]) | 294.2 [30] |
| Mounting direction | | Any | | | | | |

Notes: 1. The sonic conductance value is a calculated value, and not a measured value.
2. For details, see the effective area on p.174.
3. For details, see the port size on p.174.
4. When the main valve pressure is 0.2～0.7 MPa [29～102 psi.], set the external pilot pressure to the main valve pressure or higher, and to 0.7 MPa [102 psi.] or less.
5. Values when air pressure is 0.5 MPa [73 psi.]. For switching phase timing in the AC specification, add a maximum of 5 ms to the response time. The values for 2-position valves are those when used as a single solenoid, and the values for 3-position valves are those when switching from the neutral position of closed center.
6. In the case of a double solenoid valve.

Remark: Specification values are based on Koganei test standards.

## Solenoid Specifications for DIN Connector (-39□) Type

| Item \ Rated voltage | | 12VDC | 24VDC | 120VAC | | 240VAC | |
|---|---|---|---|---|---|---|---|
| Voltage range V | | 10.8～13.2<br>(12±10%) | 21.6～26.4<br>(24±10%) | 90～132 | | 180～264 | |
| Current | Frequency Hz | — | — | 50 | 60 | 50 | 60 |
| | Starting mA (r.m.s) | — | — | 43 | 38 | 22 | 19 |
| | Holding mA (r.m.s) | 140 (1.7W) | 75 (1.8W) | 29 | 24 | 14 | 12 |
| Allowable leakage current mA | | 8 | 4 | 4 | | 2 | |
| Insulation resistance Note MΩ | | Over 100 | | | | | |
| Surge suppression (as standard) | | Surge absorption transistor | | Varistor | | Varistor | |

Note: Value at 500VDC megger.

Remark: Specification values are based on Koganei test standards.

## Cylinder Operating Speed

### How to obtain cylinder speed

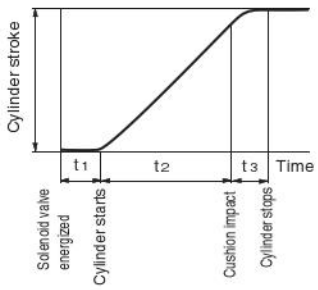


### Measuring conditions

- Air pressure : 0.5 MPa [73 psi.]
- Piping (outer diameter×inner diameter×length) : $\phi$10×$\phi$7.5×1000 mm [39 in.]
- Fitting : Quick fitting TS10-02
- Load ratio= $\frac{\text{Load}}{\text{Cylinder theoretical thrust}}$ (%)
- Cylinder stroke : 150 mm [5.91 in.]

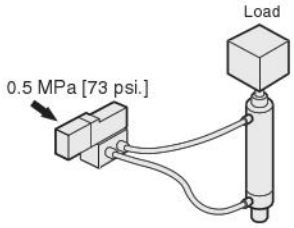


### Maximum operating speed

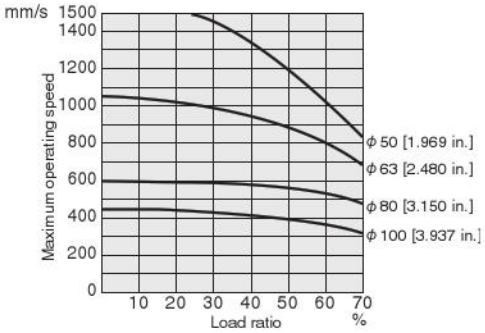


### Delay time

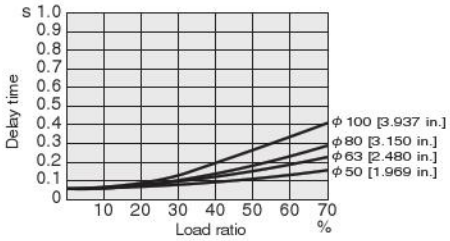


Note: Delay time may vary according to the cylinder stroke.

## Flow Rate

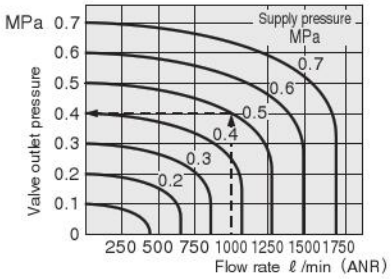


**How to read the graph**

When the supply pressure is 0.5 MPa [73 psi.] and flow rate is 1000 ℓ/min [35.3 ft.$^3$/min.] (ANR), the valve outlet pressure becomes 0.4 MPa [58 psi.].

1 mm/s = 0.0394 in./sec.
1 MPa = 145 psi.
1 ℓ/min = 0.0353ft.$^3$/min.

## Port Size

| | Description/Piping specification | PR | X (P2) | 4 (A), 2 (B) | 1 (P), 3 (R2), 5 (R1), 3, 5 (R) |
|---|---|---|---|---|---|
| | With sub-base | M5×0.8, 10-32UNF | M5×0.8, 10-32UNF | Rc1/4, NPT1/4 | Rc1/4, NPT1/4 |
| Single unit | With female thread block | — | — | Rc1/4, NPT1/4 | Rc1/4, NPT1/4 |
| Single unit | With dual use fitting block | — | — | Dual use fitting for $\phi$8 and $\phi$10 | Rc1/4, NPT1/4 |
| Single unit | With single use fitting block | — | — | $\phi$8 or $\phi$10 | Rc1/4, NPT1/4 |
| Manifold | Monoblock type with female thread block | M5×0.8, 10-32UNF | M5×0.8, 10-32UNF | Rc1/4, NPT1/4 | Rc3/8, NPT3/8 |
| Manifold | Monoblock type with fitting block | M5×0.8, 10-32UNF | M5×0.8, 10-32UNF | Dual use fitting for $\phi$8 and $\phi$10 | Rc3/8, NPT3/8 |
| Manifold | Monoblock type with single use fitting block | M5×0.8, 10-32UNF | M5×0.8, 10-32UNF | $\phi$8 or $\phi$10 | Rc3/8, NPT3/8 |
| Manifold | Split type with female thread block, and serial transmission type with female thread block | — | M5×0.8, 10-32UNF | Rc1/4, NPT1/4 | Rc3/8, NPT3/8 Single use fitting for $\phi$12 |
| Manifold | Split type with fitting block, and serial transmission type with fitting block | — | M5×0.8, 10-32UNF | Dual use fitting for $\phi$8 and $\phi$10 | |
| Manifold | Split type with single use fitting block, and serial transmission type with single use fitting block | — | M5×0.8, 10-32UNF | $\phi$8 or $\phi$10 | |

## Effective Area 〔Cv〕

### ● When used as a single unit

mm$^2$ 〔Cv〕

| Basic model | Effective area |
|---|---|
| F18T0□-A2 | 17.3 〔0.96〕 |
| F18T1□-A2 | |
| F18T2□-A2 | |
| F18T3□-A2 | |
| F18T4□-A2 | |
| F18T5□-A2 | |
| F18T0□-F3 | 17.0 〔0.94〕 |
| F18T1□-F3 | |
| F18T2□-F3 | |
| F18T3□-F3 | |
| F18T4□-F3 | |
| F18T5□-F3 | |
| F18T0□-F4 | 17.3 〔0.96〕 |
| F18T1□-F4 | |
| F18T2□-F4 | |
| F18T3□-F4 | |
| F18T4□-F4 | |
| F18T5□-F4 | |

mm$^2$ 〔Cv〕

| Basic model | Effective area |
|---|---|
| F18T0□-F5 | 15.0 〔0.83〕 |
| F18T1□-F5 | |
| F18T2□-F5 | |
| F18T3□-F5 | |
| F18T4□-F5 | |
| F18T5□-F5 | |
| F18T0□-F6 | 16.5 〔0.91〕 |
| F18T1□-F6 | |
| F18T2□-F6 | |
| F18T3□-F6 | |
| F18T4□-F6 | |
| F18T5□-F6 | |

### ● When mounted on a manifold

mm$^2$ 〔Cv〕

| Valve type \ Manifold model | | F18M□F | F18M□A | F18M□N(P)(S) |
|---|---|---|---|---|
| F18T0□ F18T1□ F18T2□ F18T3□ F18T4□ F18T5□ | Outlet port Dual use fitting for $\phi$8 and $\phi$10, Female thread | 17.0 〔0.94〕 | 16.0 〔0.89〕 | 18.0 〔1〕 |
| | Outlet port $\phi$8 fitting | 15.0 〔0.83〕 | 14.7 〔0.82〕 | 16.7 〔0.93〕 |
| | Outlet port $\phi$10 fitting | 16.5 〔0.91〕 | 15.0 〔0.83〕 | 17.0 〔0.94〕 |

Caution: When the individual air supply spacer or the individual air exhaust spacer is used, effective area decreases by about 30%.

Remark: Specification values are based on Koganei test standards.

# Mass

## Single Valve Unit Mass

g [oz.]

| F18T□□ | F18T□□-A1 | F18T□□-A2 | F18T□□-FJ | F18T□□-FJ5 | F18T□□-FJ6 |
|---|---|---|---|---|---|
| Outlet portion<br>None | Outlet portion<br>With plate | Outlet portion<br>With plate | Outlet portion<br>With dual use fitting block | Outlet portion<br>With $\phi$8 fitting block | Outlet portion<br>With $\phi$10 fitting block |
| Inlet portion<br>None | Inlet portion<br>None | Inlet portion<br>With A type sub-base | Inlet portion<br>None | Inlet portion<br>None | Inlet portion<br>None |
| 118 [4.16] | 144 [5.08] | 308 [10.86] | 159 [5.61] | 184 [6.49] | 193 [6.81] |

g [oz.]

| F18T□□-FM | F18T□□-F3 | F18T□□-F4 | F18T□□-F5 | F18T□□-F6 |
|---|---|---|---|---|
| Outlet portion<br>With female thread block | Outlet portion<br>With dual use fitting block | Outlet portion<br>With female thread block | Outlet portion<br>With $\phi$8 fitting block | Outlet portion<br>With $\phi$10 fitting block |
| Inlet portion<br>None | Inlet portion<br>With female thread block | Inlet portion<br>With female thread block | Inlet portion<br>With female thread block | Inlet portion<br>With female thread block |
| 147 [5.19] | 184 [6.49] | 172 [6.07] | 209 [7.37] | 218 [7.69] |

Basic Type **F18T0** is 15 g [0.53 oz.] less than the mass shown above.

## Monoblock Manifold Mass (single valve unit included)

g [oz.]

| Monoblock manifold | Mass calculation of each unit | | | |
|---|---|---|---|---|
| | 4(A), 2(B) ports outlet specifications | | | |
| | Female thread block | Dual use fitting block | $\phi$8 fitting block | $\phi$10 fitting block |
| A type | (334×n) + 165 [(11.78×n) + 5.82] | (344×n) + 165 [(12.13×n) + 5.82] | (369×n) + 165 [(13.02×n) + 5.82] | (378×n) + 165 [(13.33×n) + 5.82] |
| F type | (222×n) + 70 [(7.83×n) + 2.47] | (232×n) + 70 [(8.18×n) + 2.47] | (257×n) + 70 [(9.07×n) + 2.47] | (266×n) + 70 [(9.38×n) + 2.47] |

Calculation example : **F18M8AM**
**stn.1～stn.8 F18T1-A1-PS DC24V**
(334×8) + 165 = 2837 g [100.07 oz.]
When mounting a block-off plate, subtract 110 g [3.88 oz.] per unit from the above calculation result for the female thread specification; subtract 120 g [4.23 oz.] for the dual use fitting specification; subtract 145 g [5.11 oz.] for the $\phi$8 fitting specification; and subtract 154 g [5.43 oz.] for the $\phi$10 fitting specification.
When mounting the **F18T0** specification valve, subtract 15 g [0.53 oz.] per unit from the above calculation result.

## Mass of Split Manifold and Serial Transmission Compatible Manifold

Because the valve and manifold have the same output specifications, their mass is the same. The mass can only be changed by choosing a different type of inlet/outlet block.

## Mass of Split Manifold Non-Plug-in Type (single valve unit included)

g [oz.]

| Non-plug-in type | Mass calculation of each unit | | | |
|---|---|---|---|---|
| | 4(A), 2(B) ports outlet specifications | | | |
| | Female thread block | Dual use fitting block | $\phi$8 fitting block | $\phi$10 fitting block |
| | (241×n) + 234 [(8.50×n) + 8.25] | (251×n) + 234 [(8.85×n) + 8.25] | (276×n) + 234 [(9.74×n) + 8.25] | (285×n) + 234 [(10.05×n) + 8.25] |

g [oz.]

| Additional mass | |
|---|---|
| Piping block specification | |
| Female thread block | Fitting block |
| 164 [5.78] | 189 [6.67] |

Calculation example : **F18M8N-MR**
**stn.1～stn.8 F18T1-A1-PS DC24V**
(241×8) + 234 + 164 = 2326 g [82.05 oz.]
When mounting a block-off plate, subtract 110 g [3.88 oz.] per unit from the above calculation result for the female thread specification; subtract 120 g [4.23 oz.] for the dual use fitting specification; subtract 145 g [5.11 oz.] for the $\phi$8 fitting specification; and subtract 154 g [5.43 oz.] for the $\phi$10 fitting specification.
When mounting the **F18T0** specification valve, subtract 15 g [0.53 oz.] per unit from the above calculation result.

## Mass of Split Manifold Plug-in Type/ Serial Transmission Compatible Manifold (single valve unit included)

g [oz.]

| Plug-in type<br>Serial transmission compatible manifold | Mass calculation of each unit | | | |
|---|---|---|---|---|
| | 4(A), 2(B) ports outlet specifications | | | |
| | Female thread block | Dual use fitting block | $\phi$8 fitting block | $\phi$10 fitting block |
| | (243×n) + 238 [(8.57×n) + 8.40] | (253×n) + 238 [(8.92×n) + 8.40] | (278×n) + 238 [(9.81×n) + 8.40] | (287×n) + 238 [(10.12×n) + 8.40] |

g [oz.]

| Additional mass | |
|---|---|
| Piping block specification | |
| Female thread block | Fitting block |
| 174 [6.14] | 199 [7.02] |

g [oz.]

| Additional mass | | | | |
|---|---|---|---|---|
| Wiring block specification | | | | |
| **-F100, -F101** | **-F200, -F201, -F260** | **-D250, -D251** | **-D370NU** | **-T200** |
| 69 [2.43] | 71 [2.50] | 72 [2.54] | 96 [3.39] | 154 [5.43] |

g [oz.]

| Additional mass |
|---|
| Serial transmission block |
| 160 [5.64] (236 [8.32] for CompoNet) |

Calculation example : **F18M8PM-MR-F201 DC24V**
**stn.1～stn.8 F18T1-A1 DC24V**
(243×8)+238+174+71=2427 g [85.61 oz.]
When mounting the block-off plate, subtract 130 g [4.59 oz] per unit from the above calculation result.
When mounting the **F18□T0** specification valve, subtract 15 g [0.53 oz.] per unit from the above calculation result.

F18T

## F18T Valve specifications -F3-PS

With outlet port dual use fitting block
With inlet port female thread block
S type plug connector

* For T0 Type dimensions, see page 178.

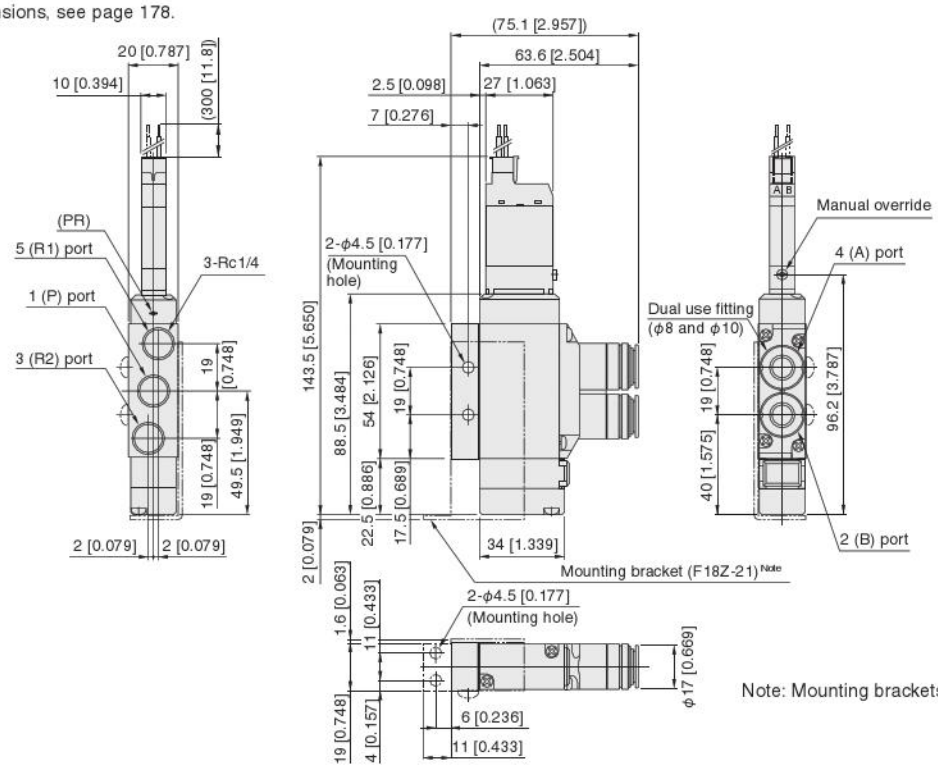


Note: Mounting brackets are additional parts (options).

## F18T Valve specifications -F4-PS
## F18T Valve specifications -F4H-PS

With outlet port female thread block
With inlet port female thread block
S type plug connector

* For T0 Type dimensions, see page 178.

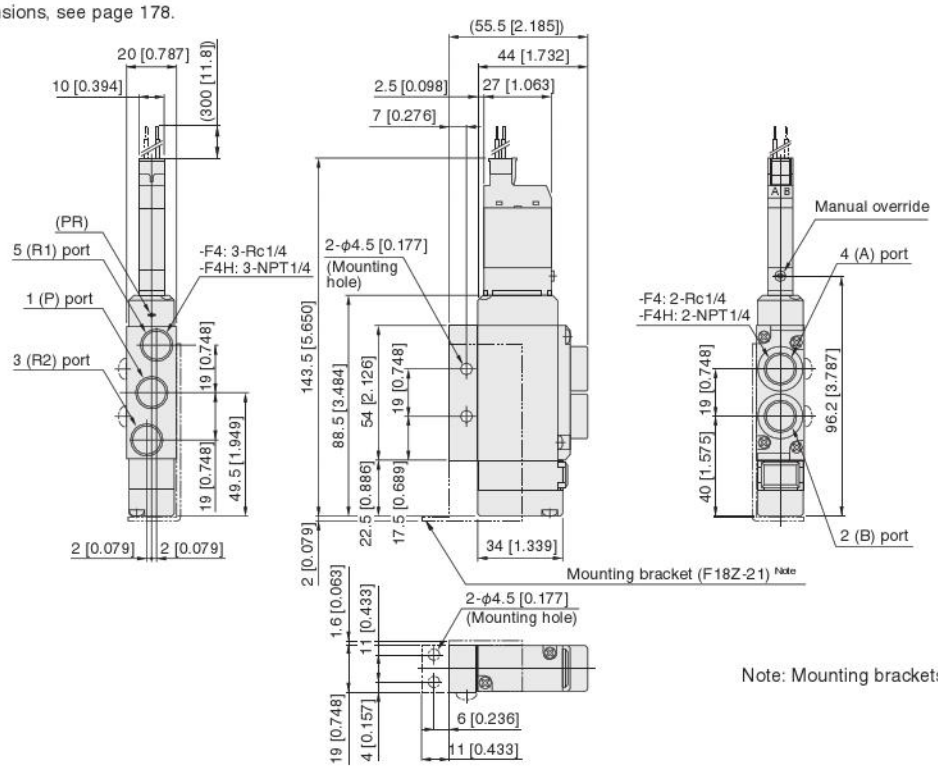


Note: Mounting brackets are additional parts (options).

# F18T0-F □ -PS

With outlet port single use fitting block
With inlet port female thread block
S type plug connector

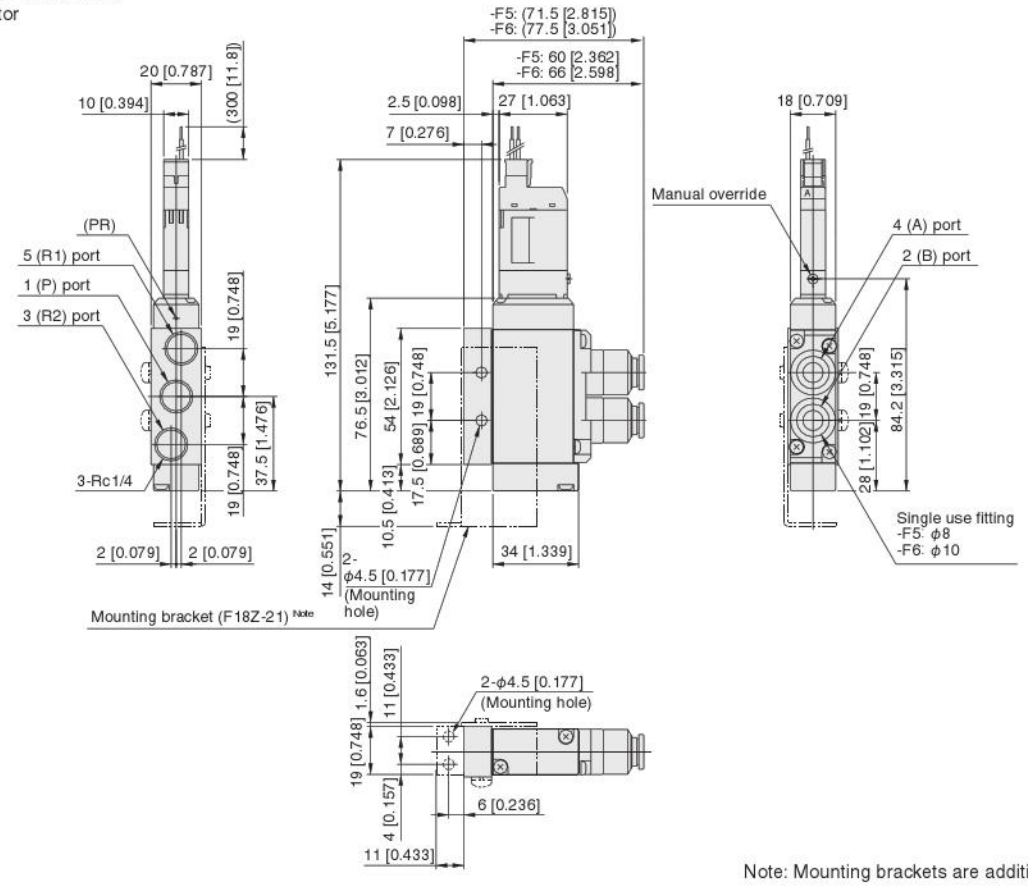


Note: Mounting brackets are additional parts (options).

CAD F18T

# F18T Valve specifications Operation system -A2-PS
# F18T Valve specifications Operation system -A2H-PS

With A-type sub-base
S type plug connector

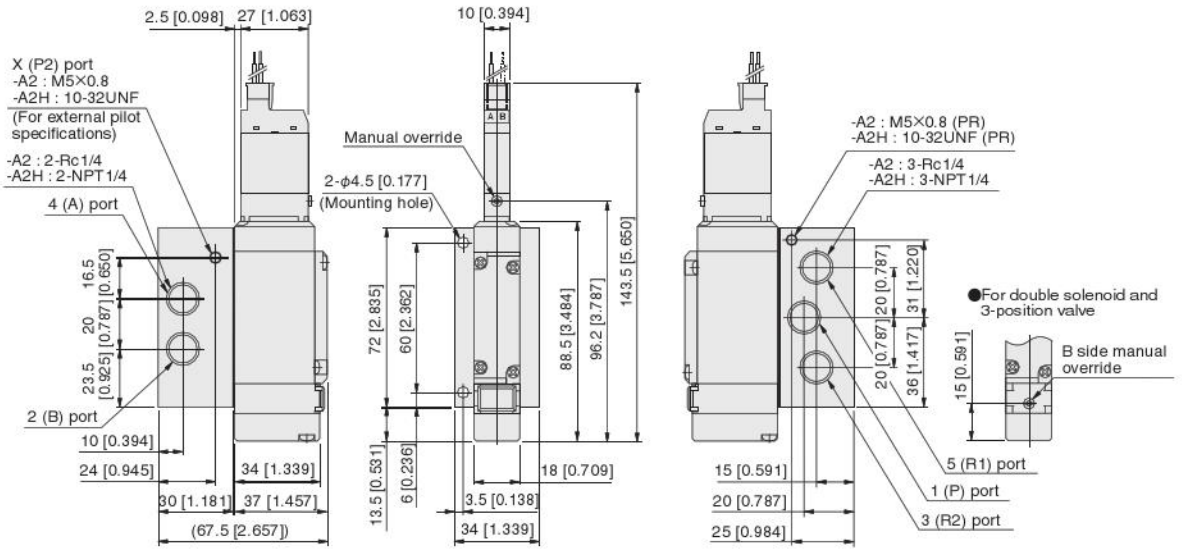


Note: The overall valve length of the T0 type is 12 mm [0.472 in] shorter (end cover side protrusion is 12 mm [0.472 in] less).

## Options

### ●L type plug connector: -PL

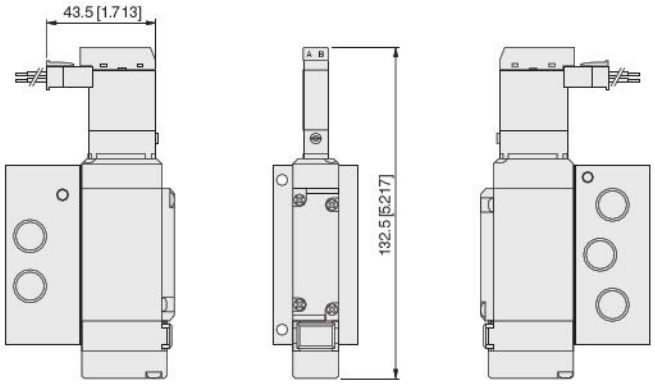


Note: The overall valve length of the T0 type is 12 mm [0.472 in] shorter
(end cover side protrusion is 12 mm [0.472 in] less).

### ●Manual lever: -R

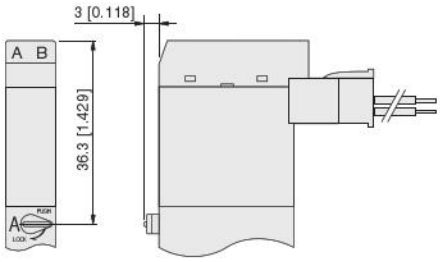


### ●Solenoid with DIN type connector: -39□

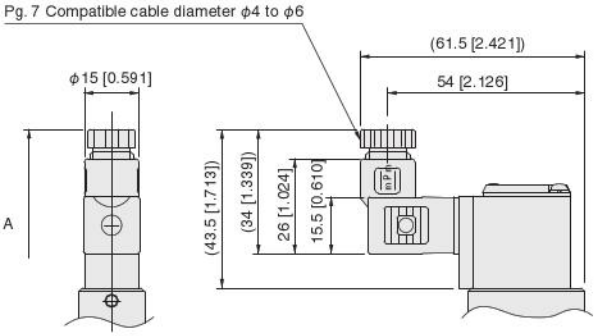


| Symbol / Model | A (Full length) |
|---|---|
| F18T0 | 127.7 [5.028] |
| F18T2 | 180.4 [7.102] |
| F18T2 to T5 | 192.4 [7.575] |

### ●Protruding locking type manual override: -83

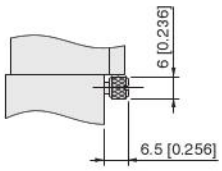

## F18M Number of valves A J/M Pilot specifications (Base piping type)

F18MA

Monoblock manifold A type
With manifold outlet port dual use fitting block
S type plug connector

### ● Internal pilot specifications

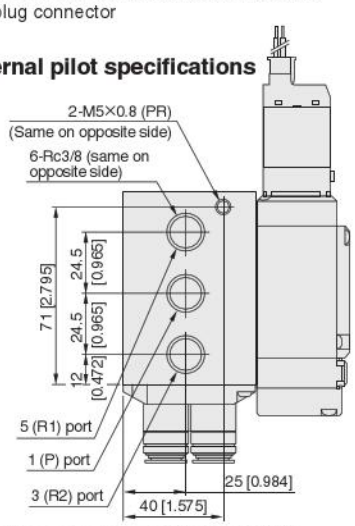


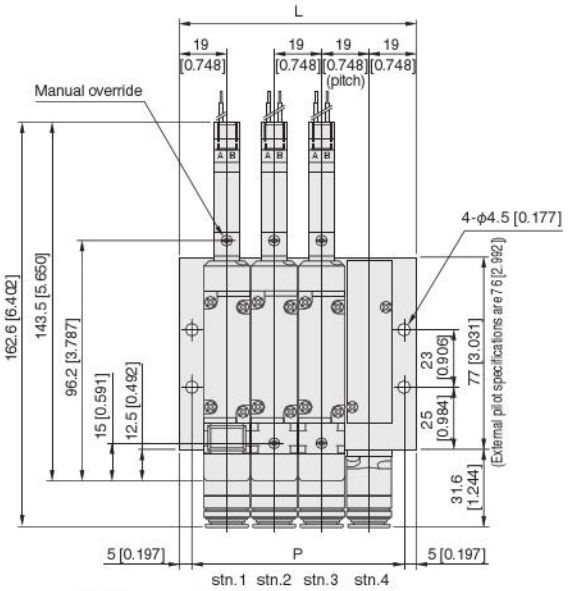


### ● External pilot specifications Note

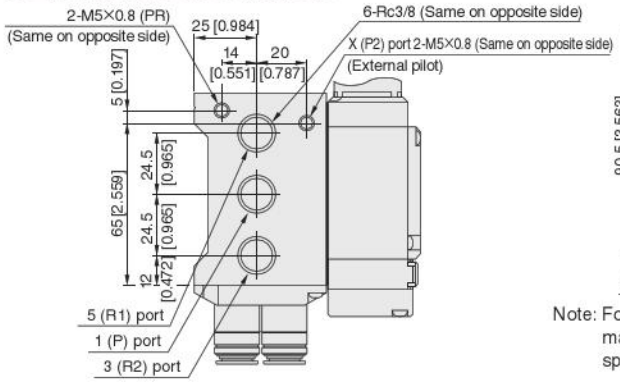


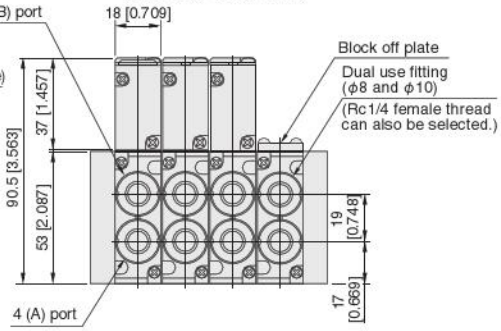


Note: For external pilot specifications, the shape of the monoblock manifold A type body is different from the internal pilot specifications.

### Unit dimensions

| Number of units | L | P |
|---|---|---|
| 2 | 57 [2.244] | 47 [1.850] |
| 3 | 76 [2.992] | 66 [2.598] |
| 4 | 95 [3.740] | 85 [3.346] |
| 5 | 114 [4.488] | 104 [4.094] |
| 6 | 133 [5.236] | 123 [4.843] |
| 7 | 152 [5.984] | 142 [5.591] |
| 8 | 171 [6.732] | 161 [6.339] |
| 9 | 190 [7.480] | 180 [7.087] |
| 10 | 209 [8.228] | 199 [7.835] |
| 11 | 228 [8.976] | 218 [8.583] |
| 12 | 247 [9.724] | 237 [9.331] |
| 13 | 266 [10.472] | 256 [10.079] |
| 14 | 285 [11.220] | 275 [10.827] |
| 15 | 304 [11.969] | 294 [11.575] |
| 16 | 323 [12.717] | 313 [12.323] |
| 17 | 342 [13.465] | 332 [13.071] |
| 18 | 361 [14.213] | 351 [13.819] |
| 19 | 380 [14.961] | 370 [14.567] |
| 20 | 399 [15.709] | 389 [15.315] |

## F18M Number of valves AL Pilot specifications (Base piping type)

Monoblock manifold A type
With manifold outlet port single use fitting block
S type plug connector

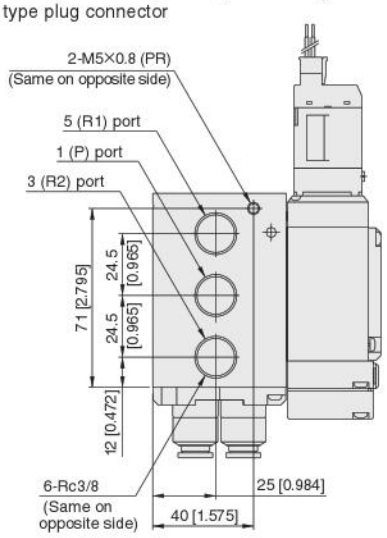


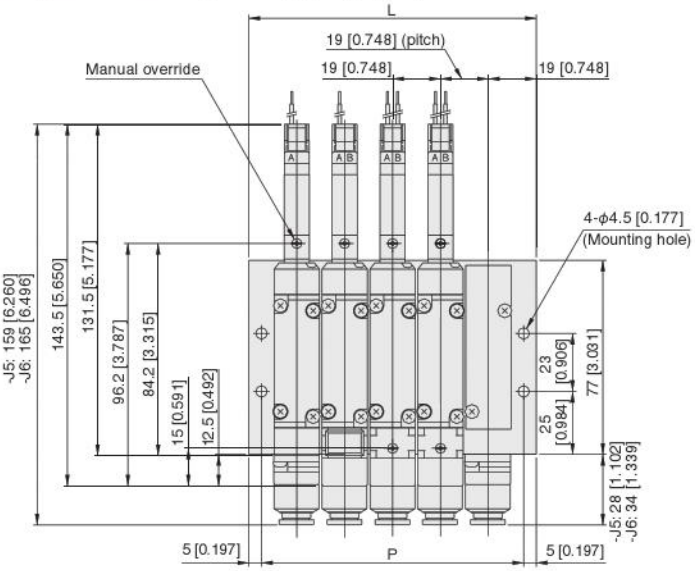


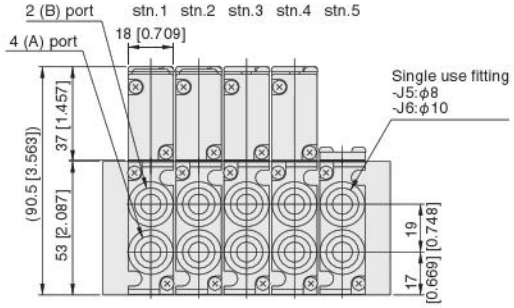


### Unit dimensions

| Number of units | L | P |
|---|---|---|
| 2 | 57 [2.244] | 47 [1.850] |
| 3 | 76 [2.992] | 66 [2.598] |
| 4 | 95 [3.740] | 85 [3.346] |
| 5 | 114 [4.488] | 104 [4.094] |
| 6 | 133 [5.236] | 123 [4.843] |
| 7 | 152 [5.984] | 142 [5.591] |
| 8 | 171 [6.732] | 161 [6.339] |
| 9 | 190 [7.480] | 180 [7.087] |
| 10 | 209 [8.228] | 199 [7.835] |
| 11 | 228 [8.976] | 218 [8.583] |
| 12 | 247 [9.724] | 237 [9.331] |
| 13 | 266 [10.472] | 256 [10.079] |
| 14 | 285 [11.220] | 275 [10.827] |
| 15 | 304 [11.969] | 294 [11.575] |
| 16 | 323 [12.717] | 313 [12.323] |
| 17 | 342 [13.465] | 332 [13.071] |
| 18 | 361 [14.213] | 351 [13.819] |
| 19 | 380 [14.961] | 370 [14.567] |
| 20 | 399 [15.709] | 389 [15.315] |

# F18M Number of valves AHL Pilot specifications (Base piping type)

F18MA

Monoblock manifold A type
With manifold outlet port female thread block
S type plug connector

## ● Internal pilot specifications

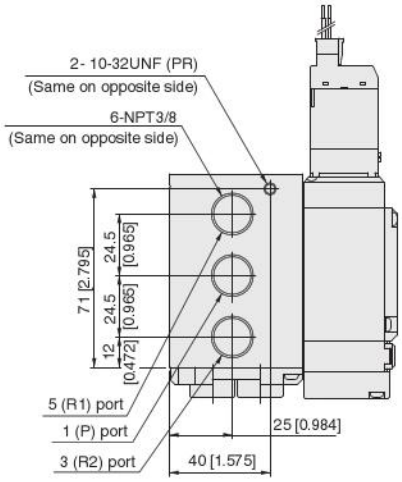


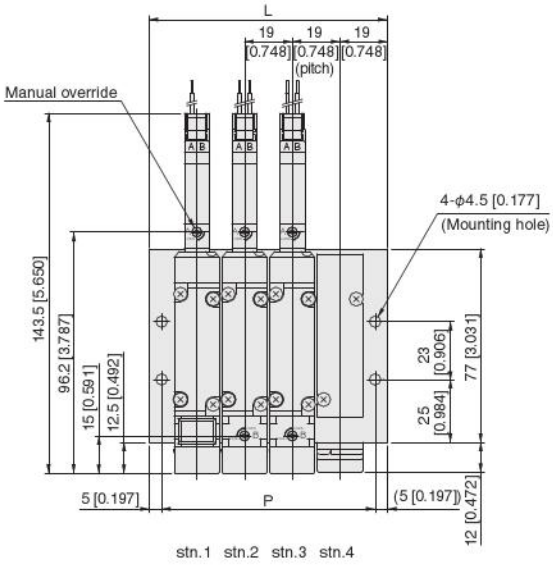


## ● External pilot specifications Note

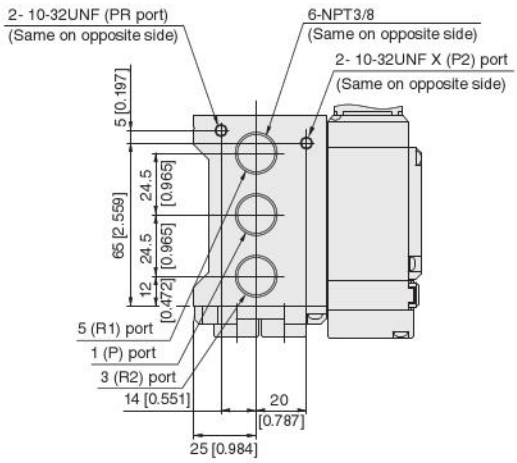


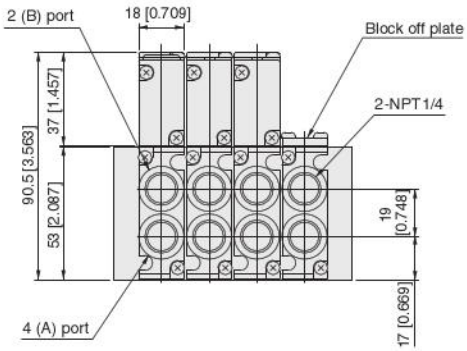


Note: For external pilot specifications, the shape of the monoblock manifold A type body is different from the internal pilot specifications.

## Unit dimensions

| Number of units | L | P |
|---|---|---|
| 2 | 57 [2.244] | 47 [1.850] |
| 3 | 76 [2.992] | 66 [2.598] |
| 4 | 95 [3.740] | 85 [3.346] |
| 5 | 114 [4.488] | 104 [4.094] |
| 6 | 133 [5.236] | 123 [4.843] |
| 7 | 152 [5.984] | 142 [5.591] |
| 8 | 171 [6.732] | 161 [6.339] |
| 9 | 190 [7.480] | 180 [7.087] |
| 10 | 209 [8.228] | 199 [7.835] |
| 11 | 228 [8.976] | 218 [8.583] |
| 12 | 247 [9.724] | 237 [9.331] |
| 13 | 266 [10.472] | 256 [10.079] |
| 14 | 285 [11.220] | 275 [10.827] |
| 15 | 304 [11.969] | 294 [11.575] |
| 16 | 323 [12.717] | 313 [12.323] |
| 17 | 342 [13.465] | 332 [13.071] |
| 18 | 361 [14.213] | 351 [13.819] |
| 19 | 380 [14.961] | 370 [14.567] |
| 20 | 399 [15.709] | 389 [15.315] |

## F18M Number of valves F (Direct piping type)

Monoblock manifold F type
With valve outlet port dual use fitting block
S type plug connector

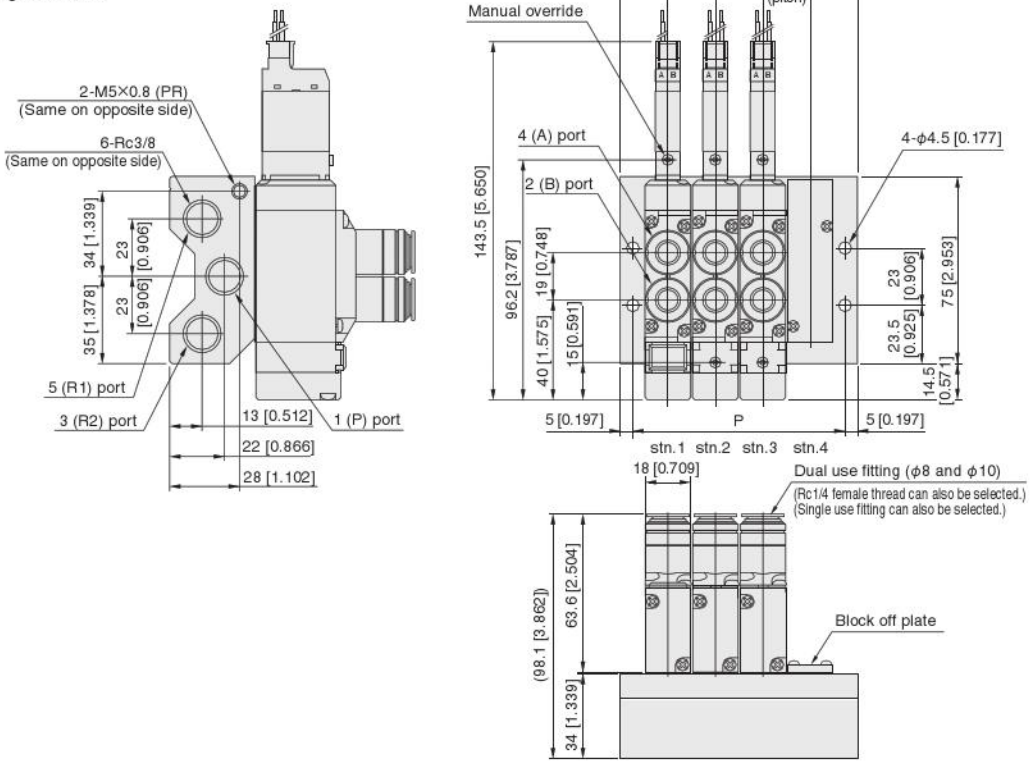


Note: The overall valve length of the T0 type is 12 mm [0.472 in] shorter (end cover side protrusion is 12 mm [0.472 in] less).

F18MF

### Unit dimensions

| Number of units | L | P |
|---|---|---|
| 2 | 57 [2.244] | 47 [1.850] |
| 3 | 76 [2.992] | 66 [2.598] |
| 4 | 95 [3.740] | 85 [3.346] |
| 5 | 114 [4.488] | 104 [4.094] |
| 6 | 133 [5.236] | 123 [4.843] |
| 7 | 152 [5.984] | 142 [5.591] |
| 8 | 171 [6.732] | 161 [6.339] |
| 9 | 190 [7.480] | 180 [7.087] |
| 10 | 209 [8.228] | 199 [7.835] |
| 11 | 228 [8.976] | 218 [8.583] |
| 12 | 247 [9.724] | 237 [9.331] |
| 13 | 266 [10.472] | 256 [10.079] |
| 14 | 285 [11.220] | 275 [10.827] |
| 15 | 304 [11.969] | 294 [11.575] |
| 16 | 323 [12.717] | 313 [12.323] |
| 17 | 342 [13.465] | 332 [13.071] |
| 18 | 361 [14.213] | 351 [13.819] |
| 19 | 380 [14.961] | 370 [14.567] |
| 20 | 399 [15.709] | 389 [15.315] |

## F18M Number of valves FH (Direct piping type)

Monoblock manifold F type
With valve outlet port female thread block
S type plug connector

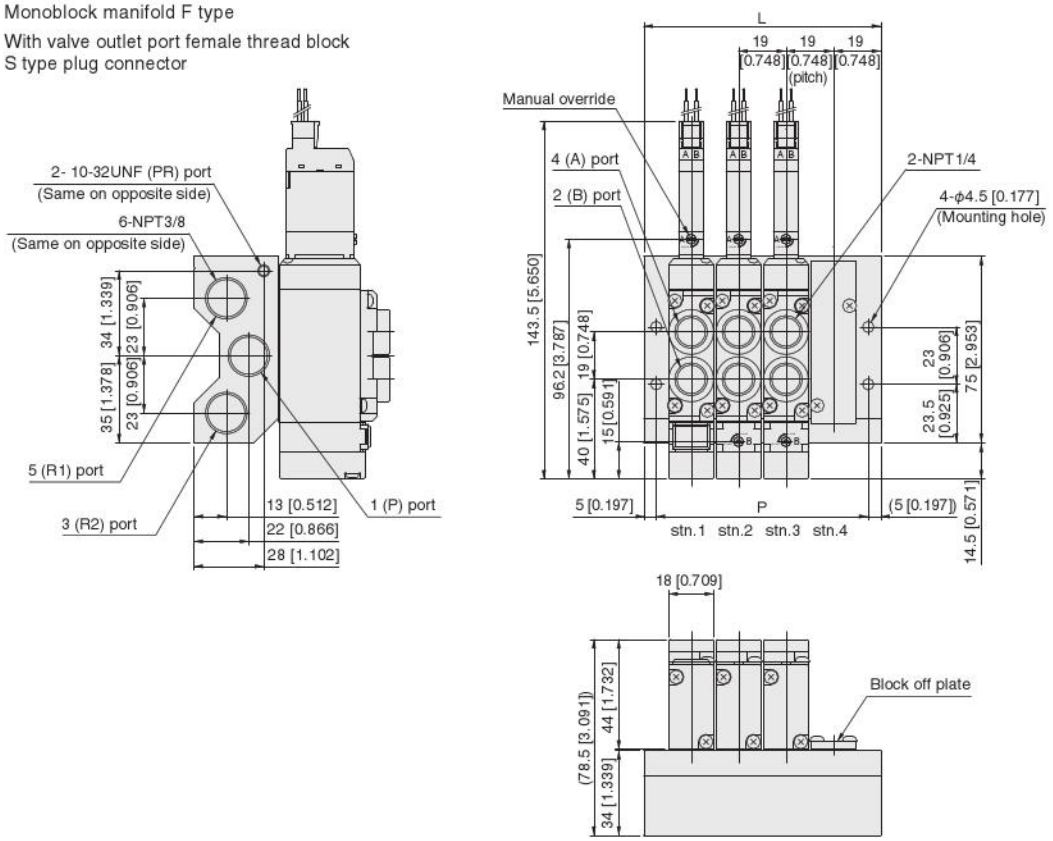


Note: The overall valve length of the T0 type is 12 mm [0.472 in] shorter (end cover side protrusion is 12 mm [0.472 in] less).

F18MF

### Unit dimensions

| Number of units | L | P |
|---|---|---|
| 2 | 57 [2.244] | 47 [1.850] |
| 3 | 76 [2.992] | 66 [2.598] |
| 4 | 95 [3.740] | 85 [3.346] |
| 5 | 114 [4.488] | 104 [4.094] |
| 6 | 133 [5.236] | 123 [4.843] |
| 7 | 152 [5.984] | 142 [5.591] |
| 8 | 171 [6.732] | 161 [6.339] |
| 9 | 190 [7.480] | 180 [7.087] |
| 10 | 209 [8.228] | 199 [7.835] |
| 11 | 228 [8.976] | 218 [8.583] |
| 12 | 247 [9.724] | 237 [9.331] |
| 13 | 266 [10.472] | 256 [10.079] |
| 14 | 285 [11.220] | 275 [10.827] |
| 15 | 304 [11.969] | 294 [11.575] |
| 16 | 323 [12.717] | 313 [12.323] |
| 17 | 342 [13.465] | 332 [13.071] |
| 18 | 361 [14.213] | 351 [13.819] |
| 19 | 380 [14.961] | 370 [14.567] |
| 20 | 399 [15.709] | 389 [15.315] |

## F18M Number of valves N J/M Pilot specifications (Base piping type)

With manifold outlet port dual use fitting block
S type plug connector

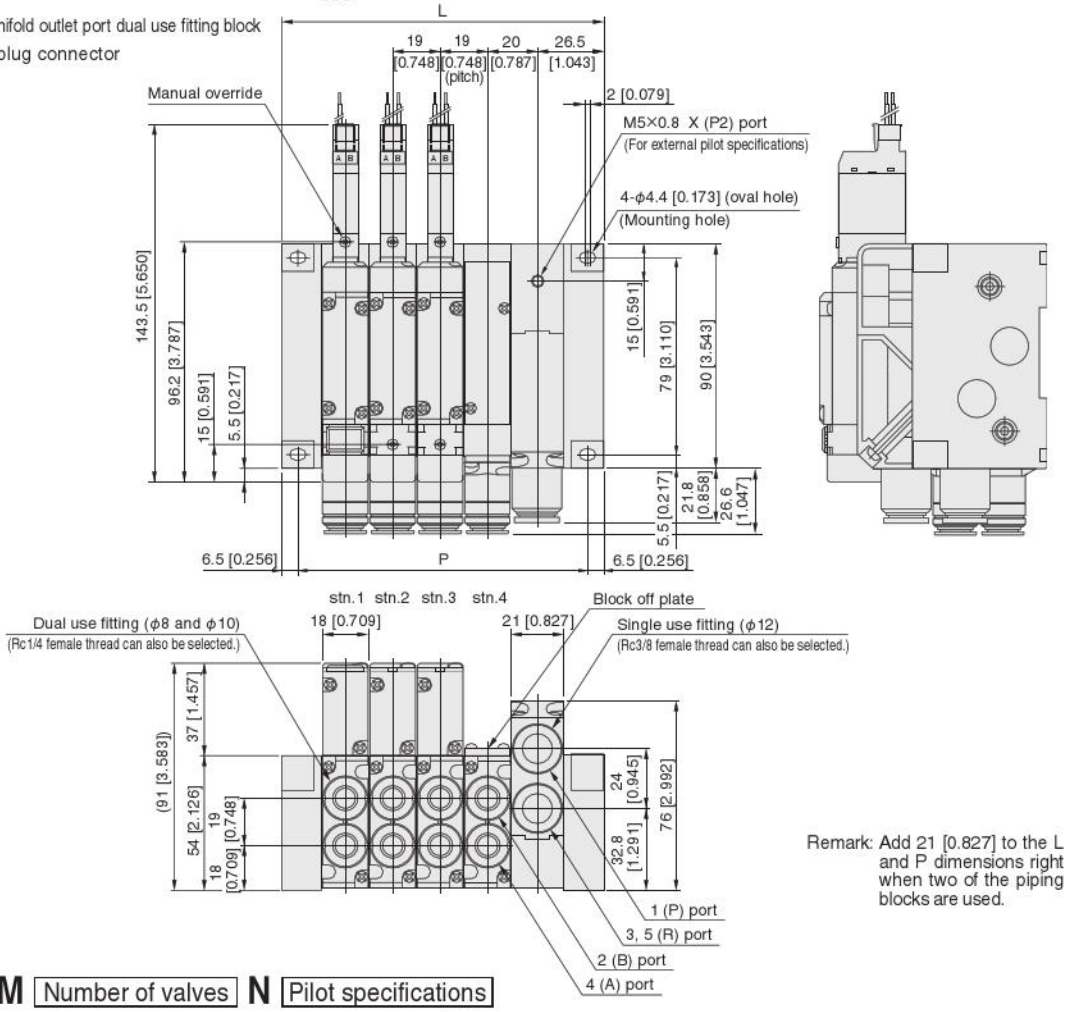


Remark: Add 21 [0.827] to the L and P dimensions right when two of the piping blocks are used.

## F18M Number of valves N Pilot specifications

(Direct piping type)

With valve outlet port dual use fitting block
S type plug connector

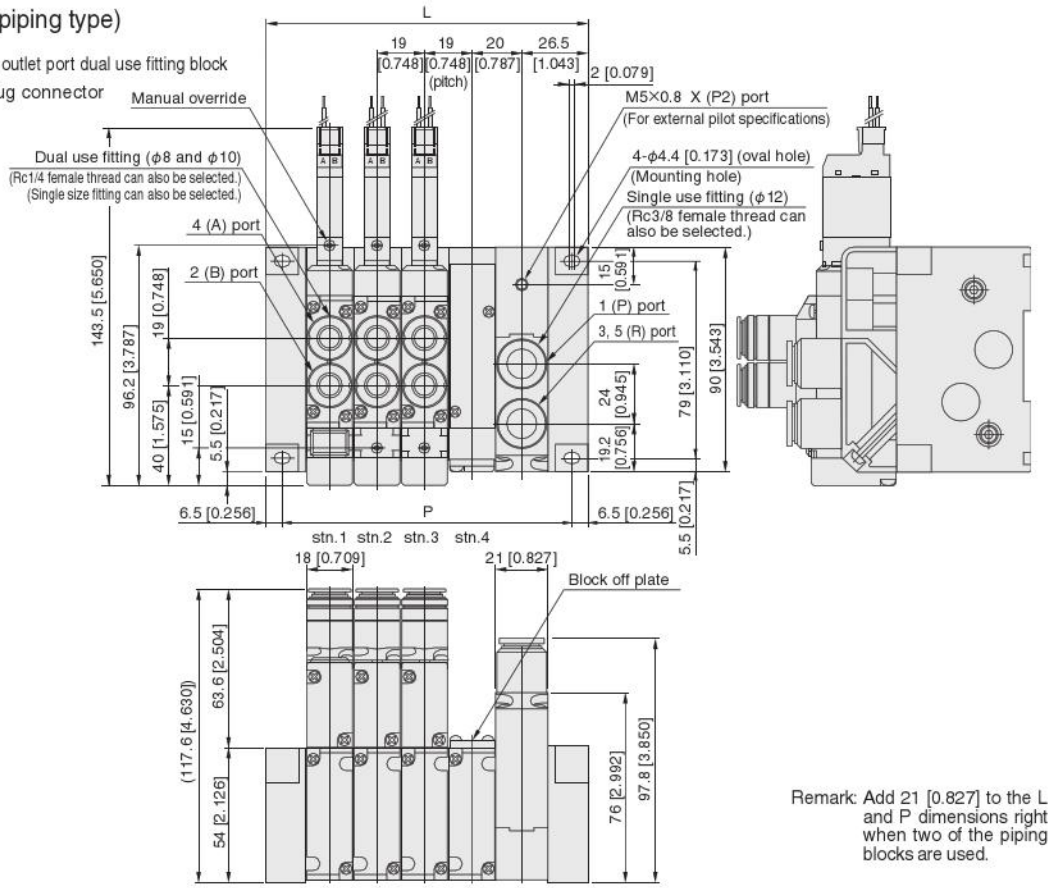


Remark: Add 21 [0.827] to the L and P dimensions right when two of the piping blocks are used.

F18MNJ

### Unit dimensions

| Number of units | L | P |
|---|---|---|
| 2 | 91 [3.583] | 78 [3.071] |
| 3 | 110 [4.331] | 97 [3.819] |
| 4 | 129 [5.079] | 116 [4.567] |
| 5 | 148 [5.827] | 135 [5.315] |
| 6 | 167 [6.575] | 154 [6.063] |
| 7 | 186 [7.323] | 173 [6.811] |
| 8 | 205 [8.071] | 192 [7.559] |
| 9 | 224 [8.819] | 211 [8.307] |
| 10 | 243 [9.567] | 230 [9.055] |
| 11 | 262 [10.315] | 249 [9.803] |
| 12 | 281 [11.063] | 268 [10.551] |
| 13 | 300 [11.811] | 287 [11.299] |
| 14 | 319 [12.559] | 306 [12.047] |
| 15 | 338 [13.307] | 325 [12.795] |
| 16 | 357 [14.055] | 344 [13.543] |
| 17 | 376 [14.803] | 363 [14.291] |
| 18 | 395 [15.551] | 382 [15.039] |
| 19 | 414 [16.299] | 401 [15.787] |
| 20 | 433 [17.047] | 420 [16.535] |

F18MN

### Unit dimensions

| Number of units | L | P |
|---|---|---|
| 2 | 91 [3.583] | 78 [3.071] |
| 3 | 110 [4.331] | 97 [3.819] |
| 4 | 129 [5.079] | 116 [4.567] |
| 5 | 148 [5.827] | 135 [5.315] |
| 6 | 167 [6.575] | 154 [6.063] |
| 7 | 186 [7.323] | 173 [6.811] |
| 8 | 205 [8.071] | 192 [7.559] |
| 9 | 224 [8.819] | 211 [8.307] |
| 10 | 243 [9.567] | 230 [9.055] |
| 11 | 262 [10.315] | 249 [9.803] |
| 12 | 281 [11.063] | 268 [10.551] |
| 13 | 300 [11.811] | 287 [11.299] |
| 14 | 319 [12.559] | 306 [12.047] |
| 15 | 338 [13.307] | 325 [12.795] |
| 16 | 357 [14.055] | 344 [13.543] |
| 17 | 376 [14.803] | 363 [14.291] |
| 18 | 395 [15.551] | 382 [15.039] |
| 19 | 414 [16.299] | 401 [15.787] |
| 20 | 433 [17.047] | 420 [16.535] |

Note: The overall valve length of the T0 type is 12 mm [0.472 in] shorter (end cover side protrusion is 12 mm [0.472 in] less).

## F18M Number of valves NHL Pilot specifications (Base piping type)

With manifold outlet port female thread block
S type plug connector

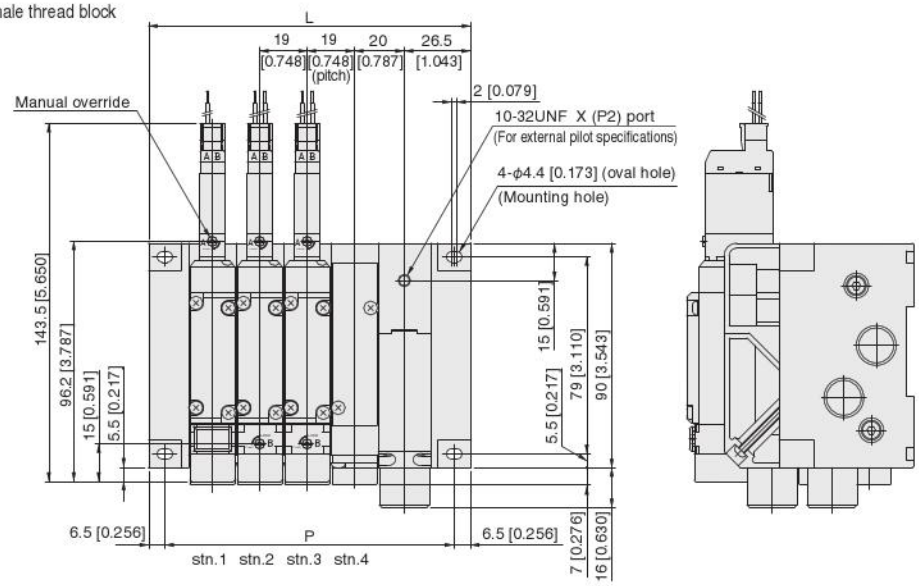


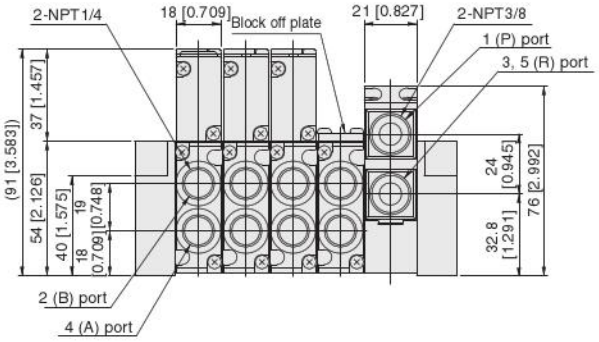


Remark: Add 21 [0.827] to the L and P dimensions right when two of the piping blocks are used.

F18MNJ

### Unit dimensions

| Number of units | L | P |
|---|---|---|
| 2 | 91 [3.583] | 78 [3.071] |
| 3 | 110 [4.331] | 97 [3.819] |
| 4 | 129 [5.079] | 116 [4.567] |
| 5 | 148 [5.827] | 135 [5.315] |
| 6 | 167 [6.575] | 154 [6.063] |
| 7 | 186 [7.323] | 173 [6.811] |
| 8 | 205 [8.071] | 192 [7.559] |
| 9 | 224 [8.819] | 211 [8.307] |
| 10 | 243 [9.567] | 230 [9.055] |
| 11 | 262 [10.315] | 249 [9.803] |
| 12 | 281 [11.063] | 268 [10.551] |
| 13 | 300 [11.811] | 287 [11.299] |
| 14 | 319 [12.559] | 306 [12.047] |
| 15 | 338 [13.307] | 325 [12.795] |
| 16 | 357 [14.055] | 344 [13.543] |
| 17 | 376 [14.803] | 363 [14.291] |
| 18 | 395 [15.551] | 382 [15.039] |
| 19 | 414 [16.299] | 401 [15.787] |
| 20 | 433 [17.047] | 420 [16.535] |

## F18M Number of valves NH Pilot specifications (Direct piping type)

With valve outlet port female thread block
S type plug connector

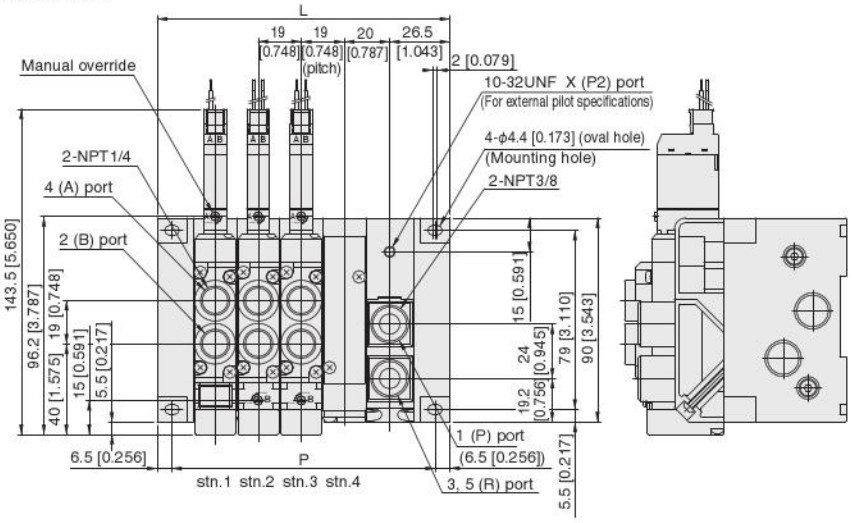


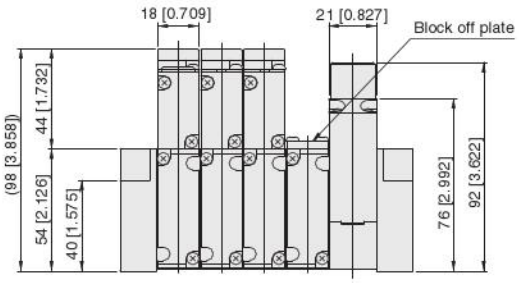


Remark: Add 21 [0.827] to the L and P dimensions right when two of the piping blocks are used.

F18MN

### Unit dimensions

| Number of units | L | P |
|---|---|---|
| 2 | 91 [3.583] | 78 [3.071] |
| 3 | 110 [4.331] | 97 [3.819] |
| 4 | 129 [5.079] | 116 [4.567] |
| 5 | 148 [5.827] | 135 [5.315] |
| 6 | 167 [6.575] | 154 [6.063] |
| 7 | 186 [7.323] | 173 [6.811] |
| 8 | 205 [8.071] | 192 [7.559] |
| 9 | 224 [8.819] | 211 [8.307] |
| 10 | 243 [9.567] | 230 [9.055] |
| 11 | 262 [10.315] | 249 [9.803] |
| 12 | 281 [11.063] | 268 [10.551] |
| 13 | 300 [11.811] | 287 [11.299] |
| 14 | 319 [12.559] | 306 [12.047] |
| 15 | 338 [13.307] | 325 [12.795] |
| 16 | 357 [14.055] | 344 [13.543] |
| 17 | 376 [14.803] | 363 [14.291] |
| 18 | 395 [15.551] | 382 [15.039] |
| 19 | 414 [16.299] | 401 [15.787] |
| 20 | 433 [17.047] | 420 [16.535] |

Note: The overall valve length of the T0 type is 12 mm [0.472 in] shorter (end cover side protrusion is 12 mm [0.472 in] less).

Combination of F18MPJ and F18-CONT

## F18M Number of valves P J/M Pilot specifications (Base piping type)

With manifold outlet port dual use fitting block
Flat cable connector 10-pin specifications

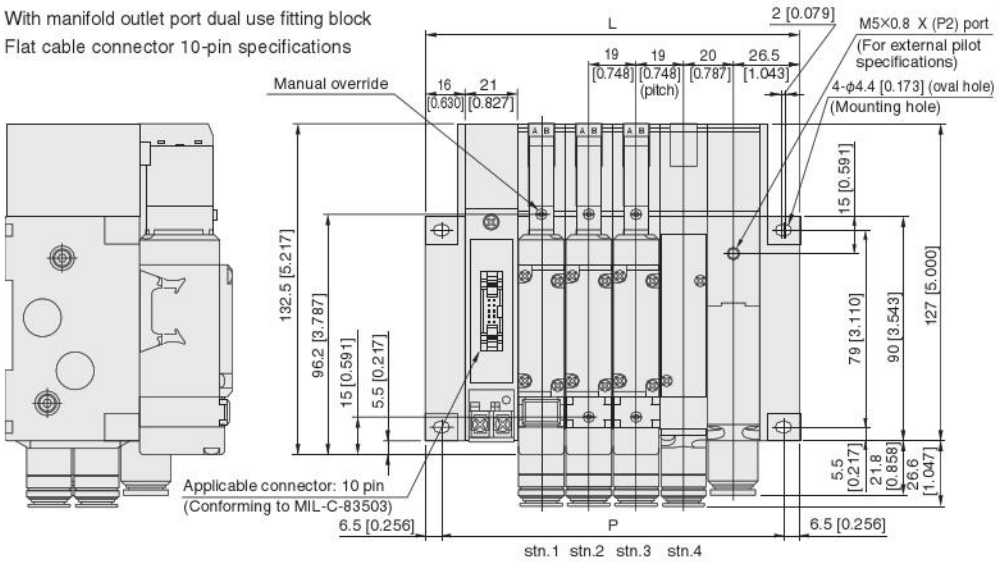


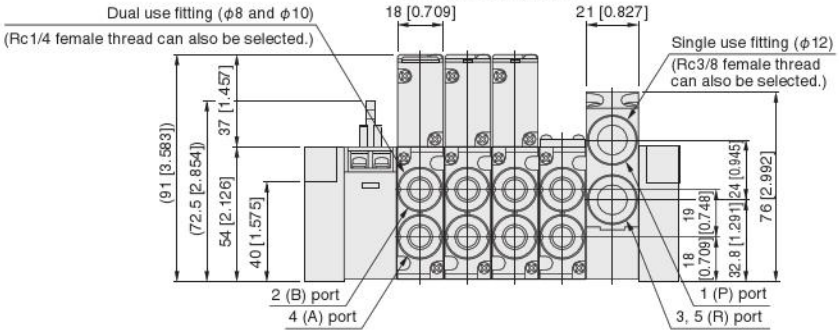


### Female thread specifications

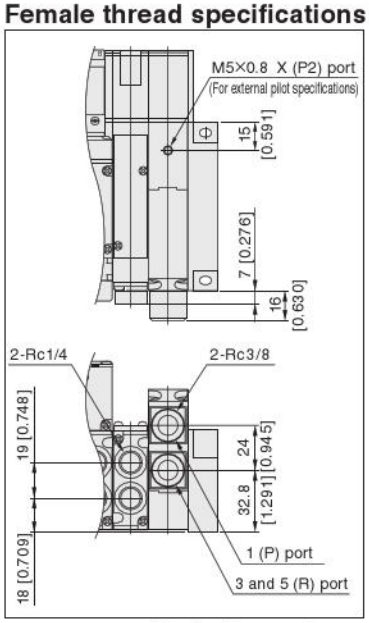


### Unit dimensions

| Number of units | L | P |
|---|---|---|
| 2 | 112 [4.409] | 99 [3.898] |
| 3 | 131 [5.157] | 118 [4.646] |
| 4 | 150 [5.906] | 137 [5.394] |
| 5 | 169 [6.654] | 156 [6.142] |
| 6 | 188 [7.402] | 175 [6.890] |
| 7 | 207 [8.150] | 194 [7.638] |
| 8 | 226 [8.898] | 213 [8.386] |

Remark: Add 21 [0.827] to the L and P dimensions above when two of the piping blocks are used.

## F18M Number of valves P J/M Pilot specifications (Base piping type)

With manifold outlet port dual use fitting block
Flat cable connector 20-pin specifications

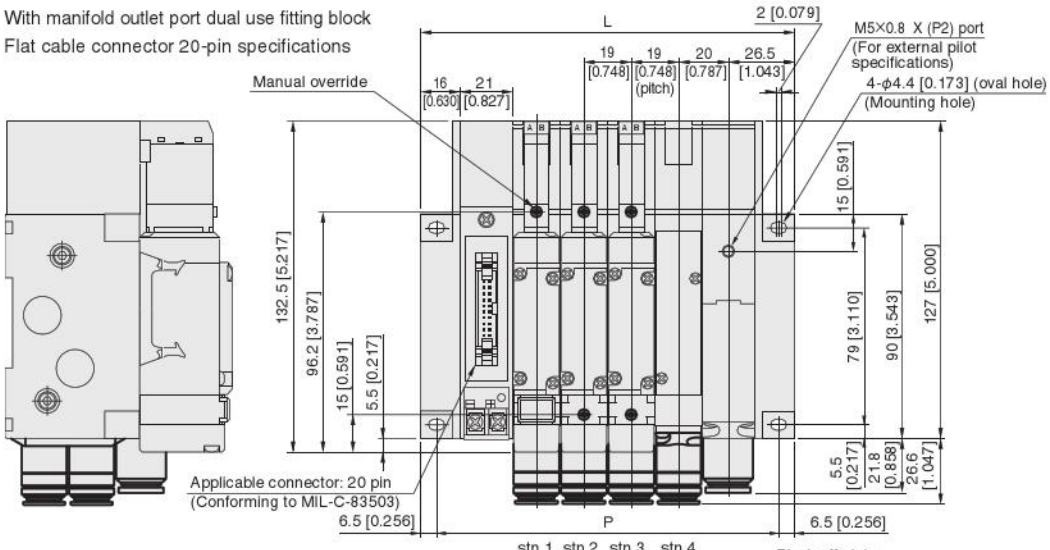


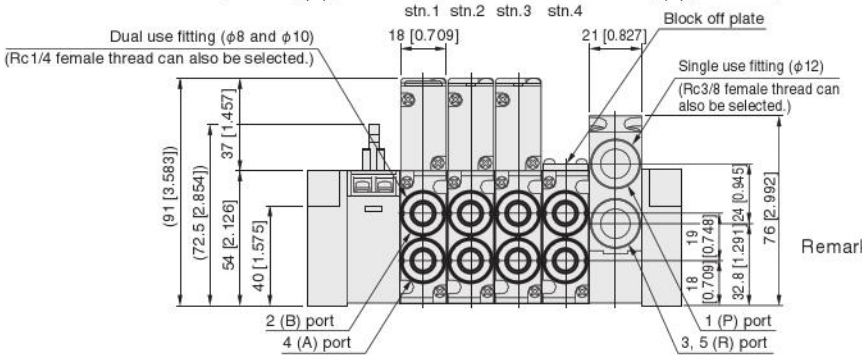


### Unit dimensions

| Number of units | L | P |
|---|---|---|
| 2 | 112 [4.409] | 99 [3.898] |
| 3 | 131 [5.157] | 118 [4.646] |
| 4 | 150 [5.906] | 137 [5.394] |
| 5 | 169 [6.654] | 156 [6.142] |
| 6 | 188 [7.402] | 175 [6.890] |
| 7 | 207 [8.150] | 194 [7.638] |
| 8 | 226 [8.898] | 213 [8.386] |
| 9 | 245 [9.646] | 232 [9.134] |
| 10 | 264 [10.394] | 251 [9.882] |
| 11 | 283 [11.142] | 270 [10.630] |
| 12 | 302 [11.890] | 289 [11.378] |
| 13 | 321 [12.638] | 308 [12.126] |
| 14 | 340 [13.386] | 327 [12.874] |
| 15 | 359 [14.134] | 346 [13.622] |
| 16 | 378 [14.882] | 365 [14.370] |

Remark: Add 21 [0.827] to the L and P dimensions right when two of the piping blocks are used.

Combination of F18MPJ and F18-CONT

## F18M Number of valves P J/M Pilot specifications (Base piping type)

With manifold outlet port dual use fitting block
Flat cable connector 26-pin specifications

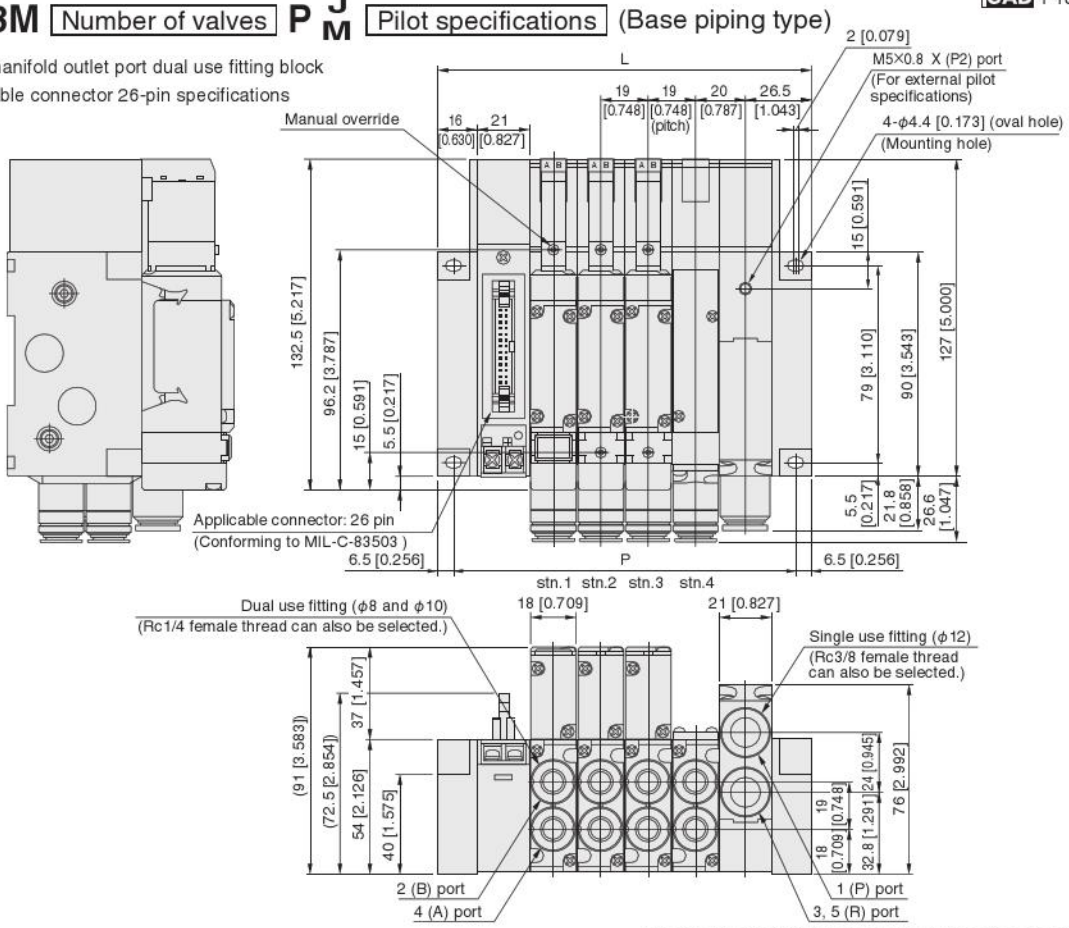


Remark: Add 21 [0.827] to the L and P dimensions right when two of the piping blocks are used.

### Unit dimensions

| Number of units | L | P |
|---|---|---|
| 2 | 112 [4.409] | 99 [3.898] |
| 3 | 131 [5.157] | 118 [4.646] |
| 4 | 150 [5.906] | 137 [5.394] |
| 5 | 169 [6.654] | 156 [6.142] |
| 6 | 188 [7.402] | 175 [6.890] |
| 7 | 207 [8.150] | 194 [7.638] |
| 8 | 226 [8.898] | 213 [8.386] |
| 9 | 245 [9.646] | 232 [9.134] |
| 10 | 264 [10.394] | 251 [9.882] |
| 11 | 283 [11.142] | 270 [10.630] |
| 12 | 302 [11.890] | 289 [11.378] |
| 13 | 321 [12.638] | 308 [12.126] |
| 14 | 340 [13.386] | 327 [12.874] |
| 15 | 359 [14.134] | 346 [13.622] |
| 16 | 378 [14.882] | 365 [14.370] |
| 17 | 397 [15.630] | 384 [15.118] |
| 18 | 416 [16.378] | 403 [15.866] |
| 19 | 435 [17.126] | 422 [16.614] |
| 20 | 454 [17.874] | 441 [17.362] |

## F18M Number of valves P J/M Pilot specifications (Base piping type)

With manifold outlet port dual use fitting block
D-sub connector 25-pin specifications

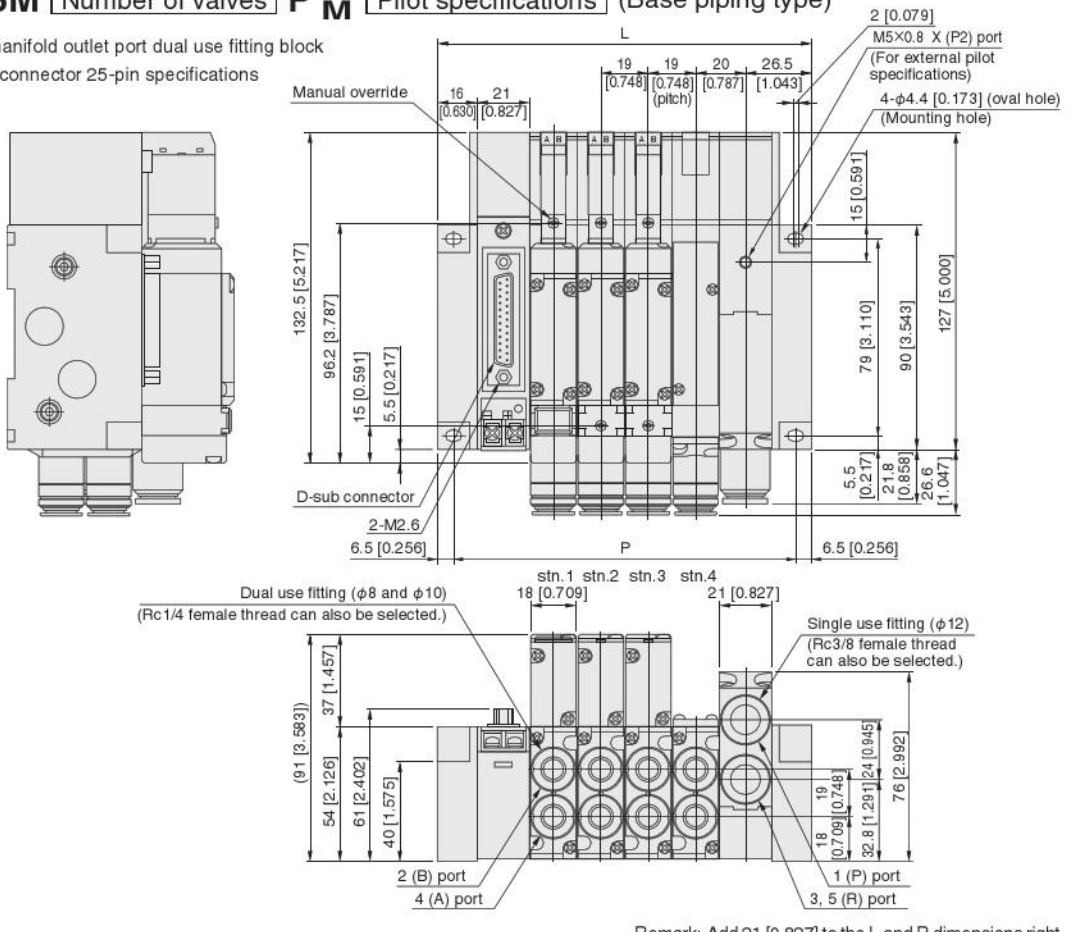


Remark: Add 21 [0.827] to the L and P dimensions right when two of the piping blocks are used.

### Unit dimensions

| Number of units | L | P |
|---|---|---|
| 2 | 112 [4.409] | 99 [3.898] |
| 3 | 131 [5.157] | 118 [4.646] |
| 4 | 150 [5.906] | 137 [5.394] |
| 5 | 169 [6.654] | 156 [6.142] |
| 6 | 188 [7.402] | 175 [6.890] |
| 7 | 207 [8.150] | 194 [7.638] |
| 8 | 226 [8.898] | 213 [8.386] |
| 9 | 245 [9.646] | 232 [9.134] |
| 10 | 264 [10.394] | 251 [9.882] |
| 11 | 283 [11.142] | 270 [10.630] |
| 12 | 302 [11.890] | 289 [11.378] |
| 13 | 321 [12.638] | 308 [12.126] |
| 14 | 340 [13.386] | 327 [12.874] |
| 15 | 359 [14.134] | 346 [13.622] |
| 16 | 378 [14.882] | 365 [14.370] |
| 17 | 397 [15.630] | 384 [15.118] |
| 18 | 416 [16.378] | 403 [15.866] |
| 19 | 435 [17.126] | 422 [16.614] |
| 20 | 454 [17.874] | 441 [17.362] |

Combination of F18MPJ and F18-CONT

## F18M Number of valves P J/M Pilot specifications (Base piping type)

With manifold outlet port dual use fitting block
Terminal block type

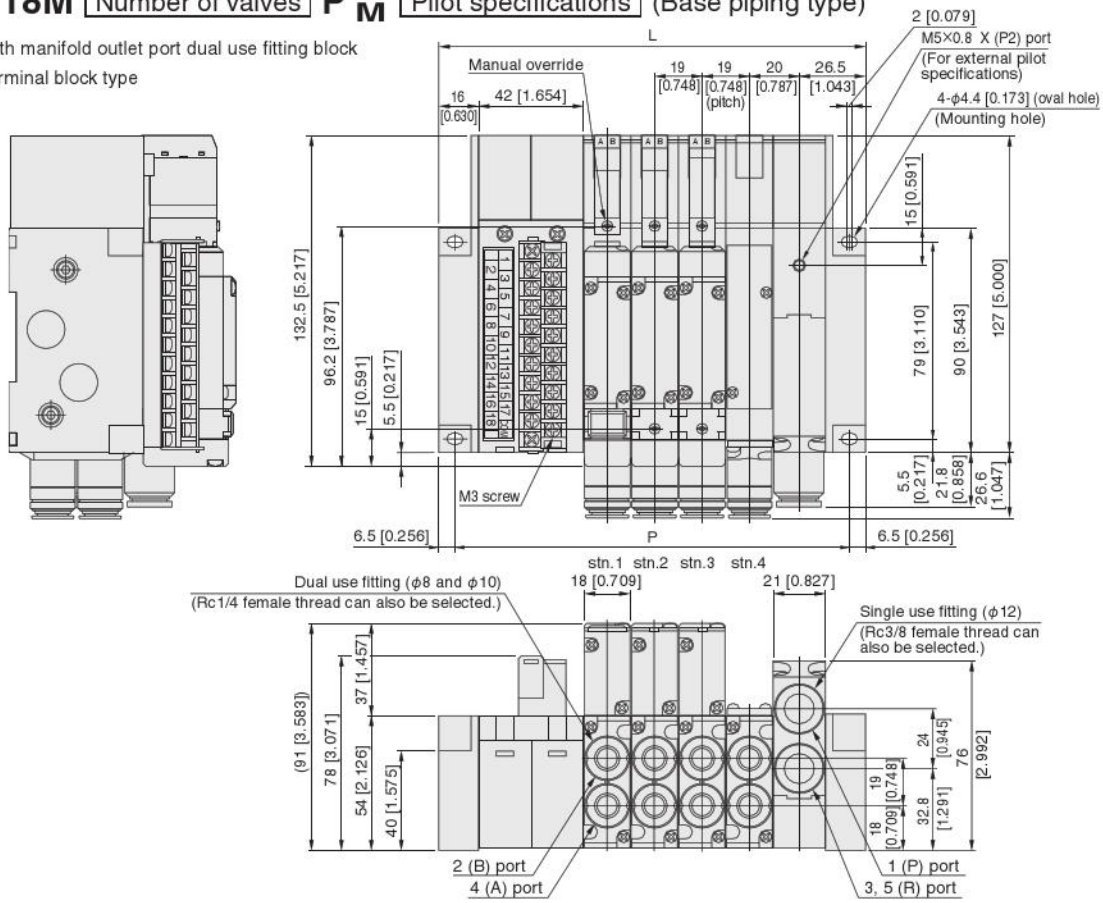


### Unit dimensions

| Number of units | L | P |
|---|---|---|
| 2 | 133 [5.236] | 120 [4.724] |
| 3 | 152 [5.984] | 139 [5.472] |
| 4 | 171 [6.732] | 158 [6.220] |
| 5 | 190 [7.480] | 177 [6.969] |
| 6 | 209 [8.228] | 196 [7.717] |
| 7 | 228 [8.976] | 215 [8.465] |
| 8 | 247 [9.724] | 234 [9.213] |
| 9 | 266 [10.472] | 253 [9.961] |
| 10 | 285 [11.220] | 272 [10.709] |
| 11 | 304 [11.969] | 291 [11.457] |
| 12 | 323 [12.717] | 310 [12.205] |
| 13 | 342 [13.465] | 329 [12.953] |
| 14 | 361 [14.213] | 348 [13.701] |
| 15 | 380 [14.961] | 367 [14.449] |
| 16 | 399 [15.709] | 386 [15.197] |
| 17 | 418 [16.457] | 405 [15.945] |
| 18 | 437 [17.205] | 424 [16.693] |

Remark: Add 21 [0.827] to the L and P dimensions above when two of the piping blocks are used.

## F18M Number of valves PL Pilot specifications (Base piping type)

With manifold outlet port single use fitting block
Flat cable connector 20-pin specifications

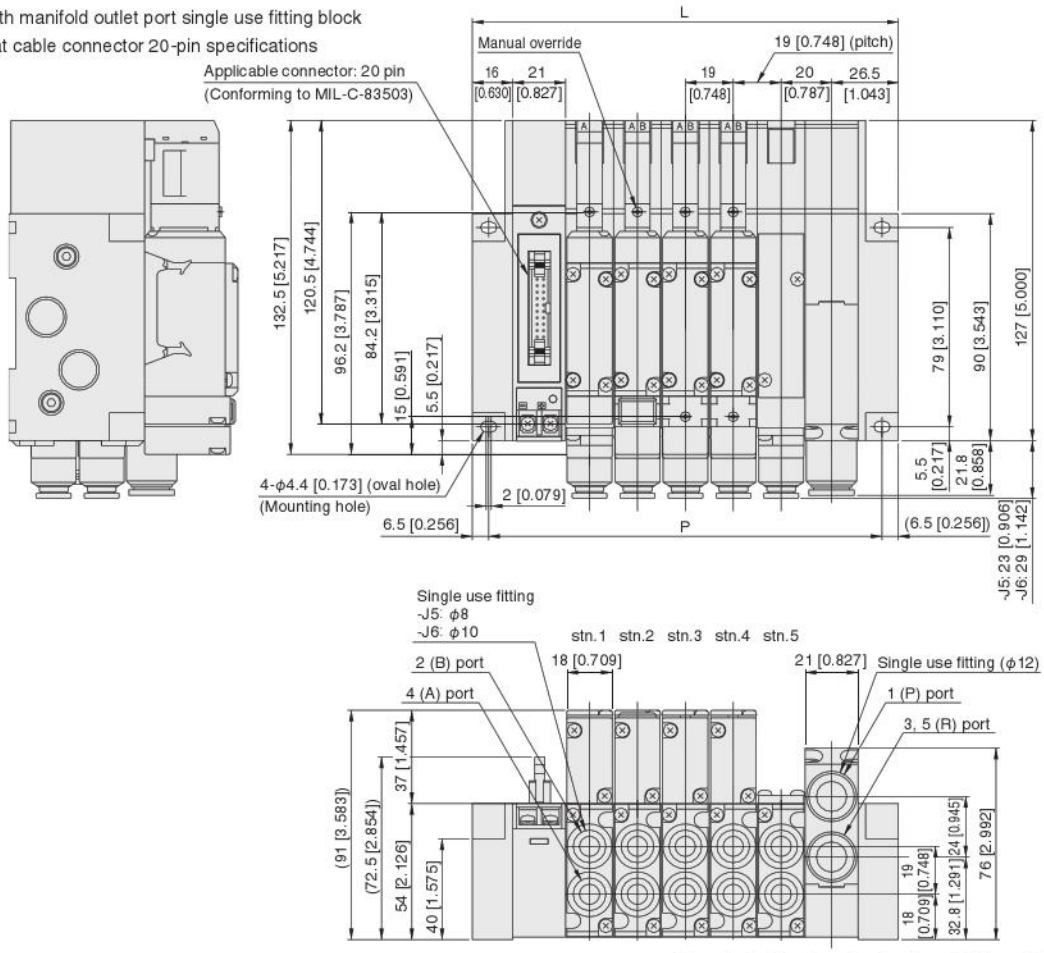


Remark: Add 21 [0.827] to the L and P dimensions right when two of the piping blocks are used.

### Unit dimensions

| Number of units | L | P |
|---|---|---|
| 2 | 112 [4.409] | 99 [3.898] |
| 3 | 131 [5.157] | 118 [4.646] |
| 4 | 150 [5.906] | 137 [5.394] |
| 5 | 169 [6.654] | 156 [6.142] |
| 6 | 188 [7.402] | 175 [6.890] |
| 7 | 207 [8.150] | 194 [7.638] |
| 8 | 226 [8.898] | 213 [8.386] |
| 9 | 245 [9.646] | 232 [9.134] |
| 10 | 264 [10.394] | 251 [9.882] |
| 11 | 283 [11.142] | 270 [10.630] |
| 12 | 302 [11.890] | 289 [11.378] |
| 13 | 321 [12.638] | 308 [12.126] |
| 14 | 340 [13.386] | 327 [12.874] |
| 15 | 359 [14.134] | 346 [13.622] |
| 16 | 378 [14.882] | 365 [14.370] |
| 17 | 397 [15.630] | 384 [15.118] |
| 18 | 416 [16.378] | 403 [15.866] |
| 19 | 435 [17.126] | 422 [16.614] |
| 20 | 454 [17.874] | 441 [17.362] |

## F18M Number of valves PHL Pilot specifications (Base piping type)

Combination of F18MPJ and F18-CONT

With manifold outlet port female thread block
Flat cable connector 10-pin specifications

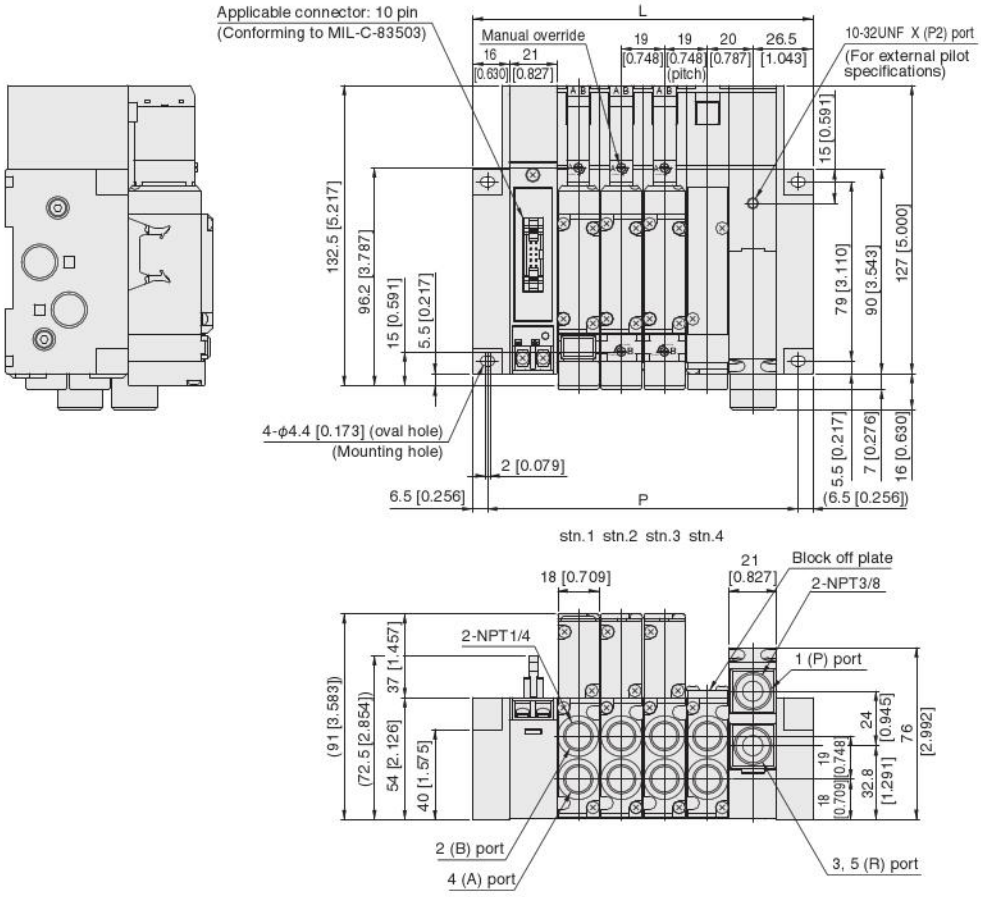


### Unit dimensions

| Number of units | L | P |
|---|---|---|
| 2 | 112 [4.409] | 99 [3.898] |
| 3 | 131 [5.157] | 118 [4.646] |
| 4 | 150 [5.906] | 137 [5.394] |
| 5 | 169 [6.654] | 156 [6.142] |
| 6 | 188 [7.402] | 175 [6.890] |
| 7 | 207 [8.150] | 194 [7.638] |
| 8 | 226 [8.898] | 213 [8.386] |

Remark: Add 21 [0.827] to the L and P dimensions above when two of the piping blocks are used.

## F18M Number of valves PH Pilot specifications (Direct piping type)

With valve outlet port female thread block
Flat cable connector 10-pin specifications

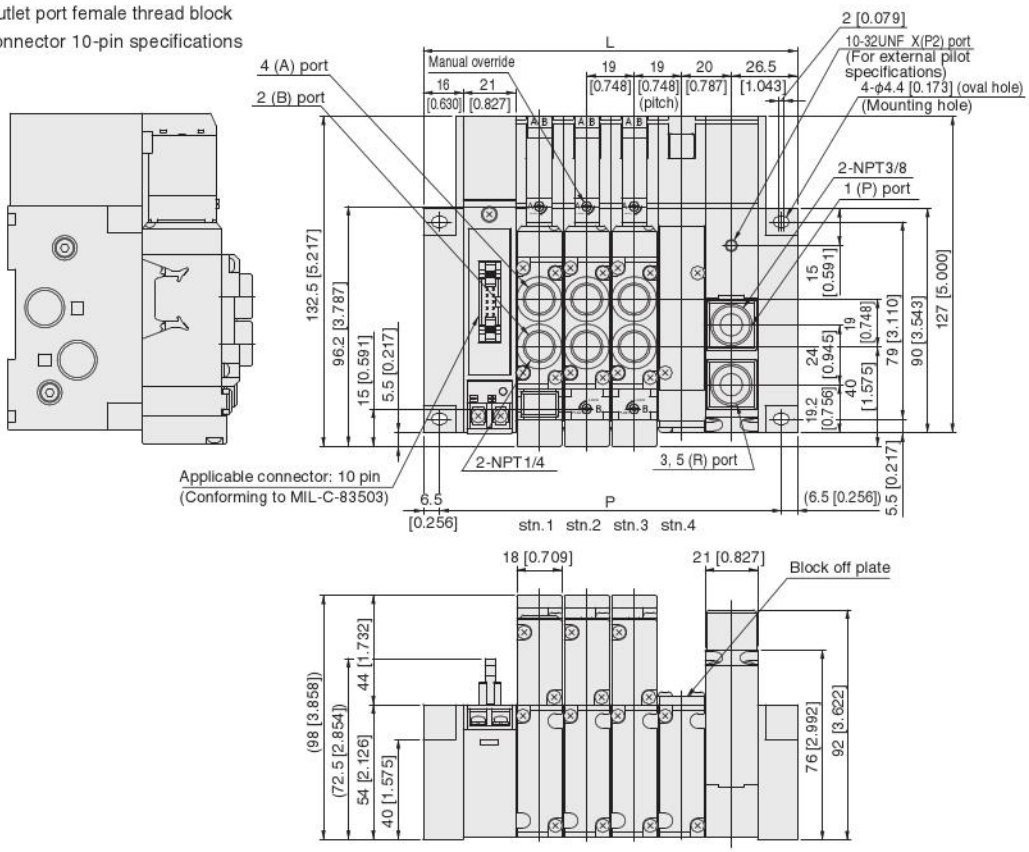


### Unit dimensions

| Number of units | L | P |
|---|---|---|
| 2 | 112 [4.409] | 99 [3.898] |
| 3 | 131 [5.157] | 118 [4.646] |
| 4 | 150 [5.906] | 137 [5.394] |
| 5 | 169 [6.654] | 156 [6.142] |
| 6 | 188 [7.402] | 175 [6.890] |
| 7 | 207 [8.150] | 194 [7.638] |
| 8 | 226 [8.898] | 213 [8.386] |

Remark: Add 21 [0.827] to the L and P dimensions above when two of the piping blocks are used.

## F18M Number of valves PHL Pilot specifications (Base piping type)

Combination of F18MPJ and F18-CONT

With manifold outlet port female thread block
Flat cable connector 20-pin specifications

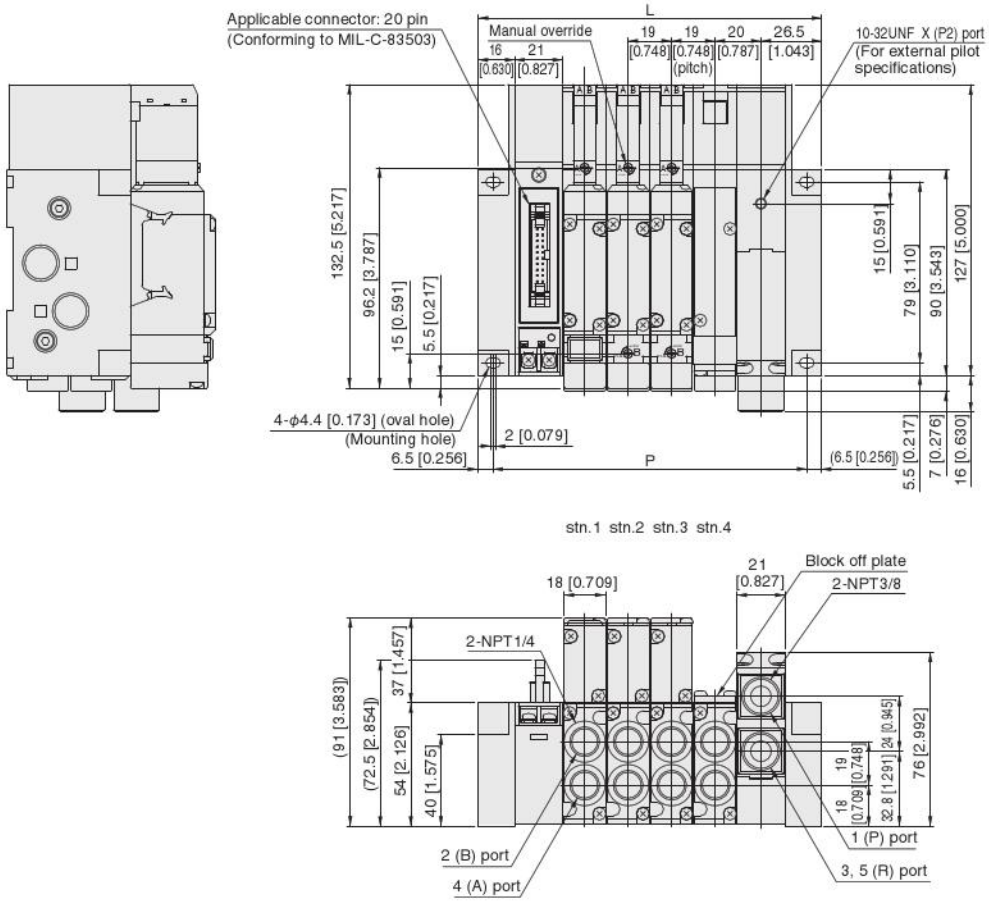


### Unit dimensions

| Number of units | L | P |
|---|---|---|
| 2 | 112 [4.409] | 99 [3.898] |
| 3 | 131 [5.157] | 118 [4.646] |
| 4 | 150 [5.906] | 137 [5.394] |
| 5 | 169 [6.654] | 156 [6.142] |
| 6 | 188 [7.402] | 175 [6.890] |
| 7 | 207 [8.150] | 194 [7.638] |
| 8 | 226 [8.898] | 213 [8.386] |
| 9 | 245 [9.646] | 232 [9.134] |
| 10 | 264 [10.394] | 251 [9.882] |
| 11 | 283 [11.142] | 270 [10.630] |
| 12 | 302 [11.890] | 289 [11.378] |
| 13 | 321 [12.638] | 308 [12.126] |
| 14 | 340 [13.386] | 327 [12.874] |
| 15 | 359 [14.134] | 346 [13.622] |
| 16 | 378 [14.882] | 365 [14.370] |

Remark: Add 21 [0.827] to the L and P dimensions above when two of the piping blocks are used.

## F18M Number of valves PH Pilot specifications (Direct piping type)

With valve outlet port female thread block
Flat cable connector 20-pin specifications

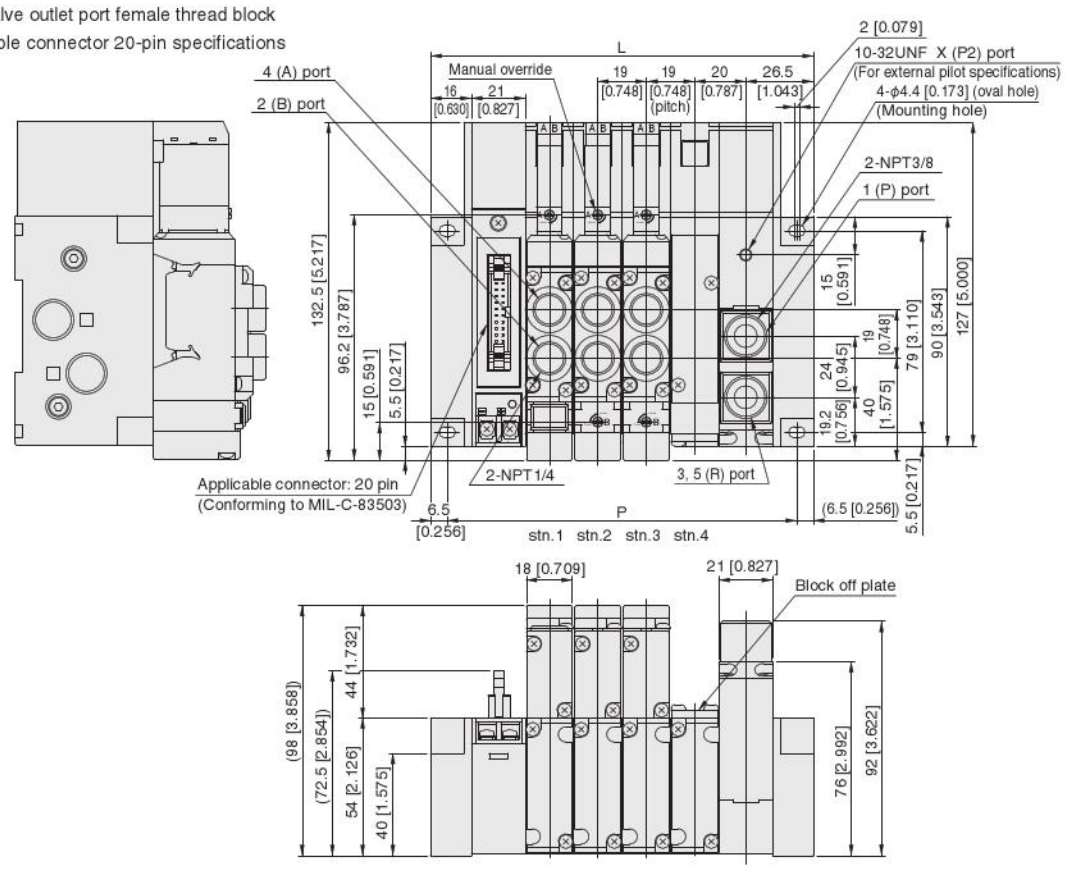


### Unit dimensions

| Number of units | L | P |
|---|---|---|
| 2 | 112 [4.409] | 99 [3.898] |
| 3 | 131 [5.157] | 118 [4.646] |
| 4 | 150 [5.906] | 137 [5.394] |
| 5 | 169 [6.654] | 156 [6.142] |
| 6 | 188 [7.402] | 175 [6.890] |
| 7 | 207 [8.150] | 194 [7.638] |
| 8 | 226 [8.898] | 213 [8.386] |
| 9 | 245 [9.646] | 232 [9.134] |
| 10 | 264 [10.394] | 251 [9.882] |
| 11 | 283 [11.142] | 270 [10.630] |
| 12 | 302 [11.890] | 289 [11.378] |
| 13 | 321 [12.638] | 308 [12.126] |
| 14 | 340 [13.386] | 327 [12.874] |
| 15 | 359 [14.134] | 346 [13.622] |
| 16 | 378 [14.882] | 365 [14.370] |

Remark: Add 21 [0.827] to the L and P dimensions above when two of the piping blocks are used.

Combination of F18MPJ and F18-CONT

## F18M Number of valves PHL Pilot specifications (Base piping type)

With manifold outlet port female thread block
Flat cable connector 26-pin specifications

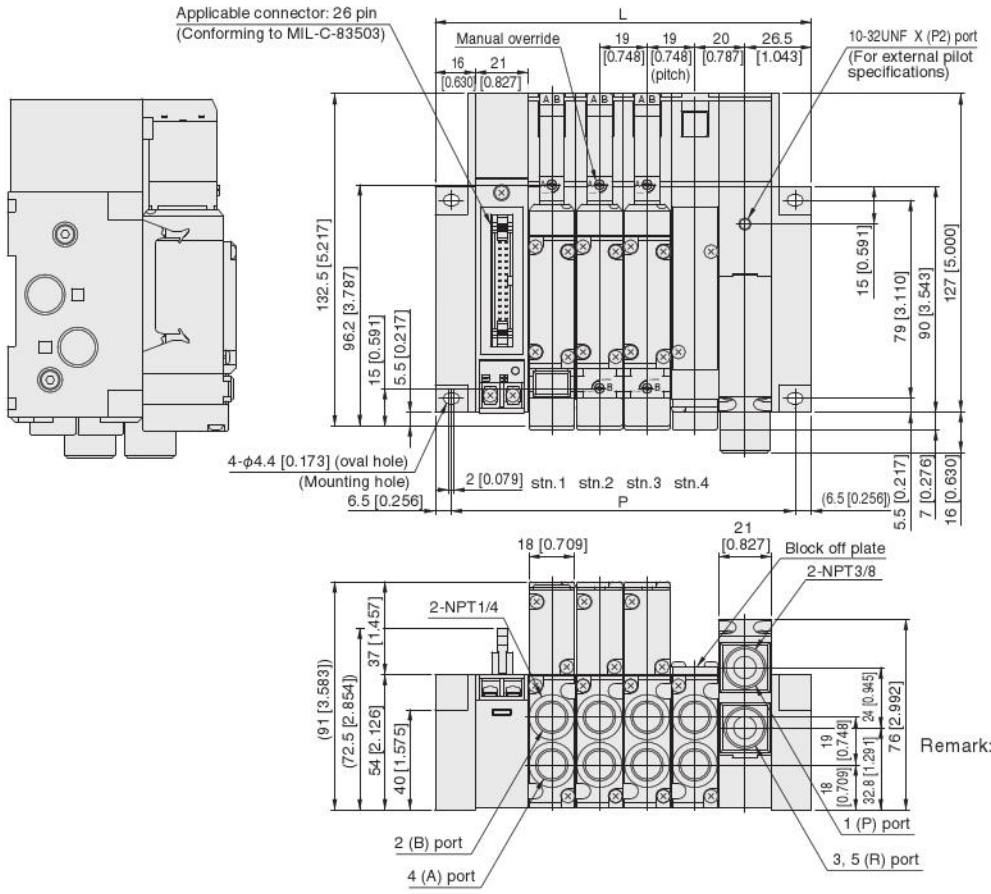


Remark: Add 21 [0.827] to the L and P dimensions right when two of the piping blocks are used.

### Unit dimensions

| Number of units | L | P |
|---|---|---|
| 2 | 112 [4.409] | 99 [3.898] |
| 3 | 131 [5.157] | 118 [4.646] |
| 4 | 150 [5.906] | 137 [5.394] |
| 5 | 169 [6.654] | 156 [6.142] |
| 6 | 188 [7.402] | 175 [6.890] |
| 7 | 207 [8.150] | 194 [7.638] |
| 8 | 226 [8.898] | 213 [8.386] |
| 9 | 245 [9.646] | 232 [9.134] |
| 10 | 264 [10.394] | 251 [9.882] |
| 11 | 283 [11.142] | 270 [10.630] |
| 12 | 302 [11.890] | 289 [11.378] |
| 13 | 321 [12.638] | 308 [12.126] |
| 14 | 340 [13.386] | 327 [12.874] |
| 15 | 359 [14.134] | 346 [13.622] |
| 16 | 378 [14.882] | 365 [14.370] |
| 17 | 397 [15.630] | 384 [15.118] |
| 18 | 416 [16.378] | 403 [15.866] |
| 19 | 435 [17.126] | 422 [16.614] |
| 20 | 454 [17.874] | 441 [17.362] |

Combination of F18MPJ and F18-CONT

## F18M Number of valves PH Pilot specifications (Direct piping type)

With valve outlet port female thread block
Flat cable connector 26-pin specifications

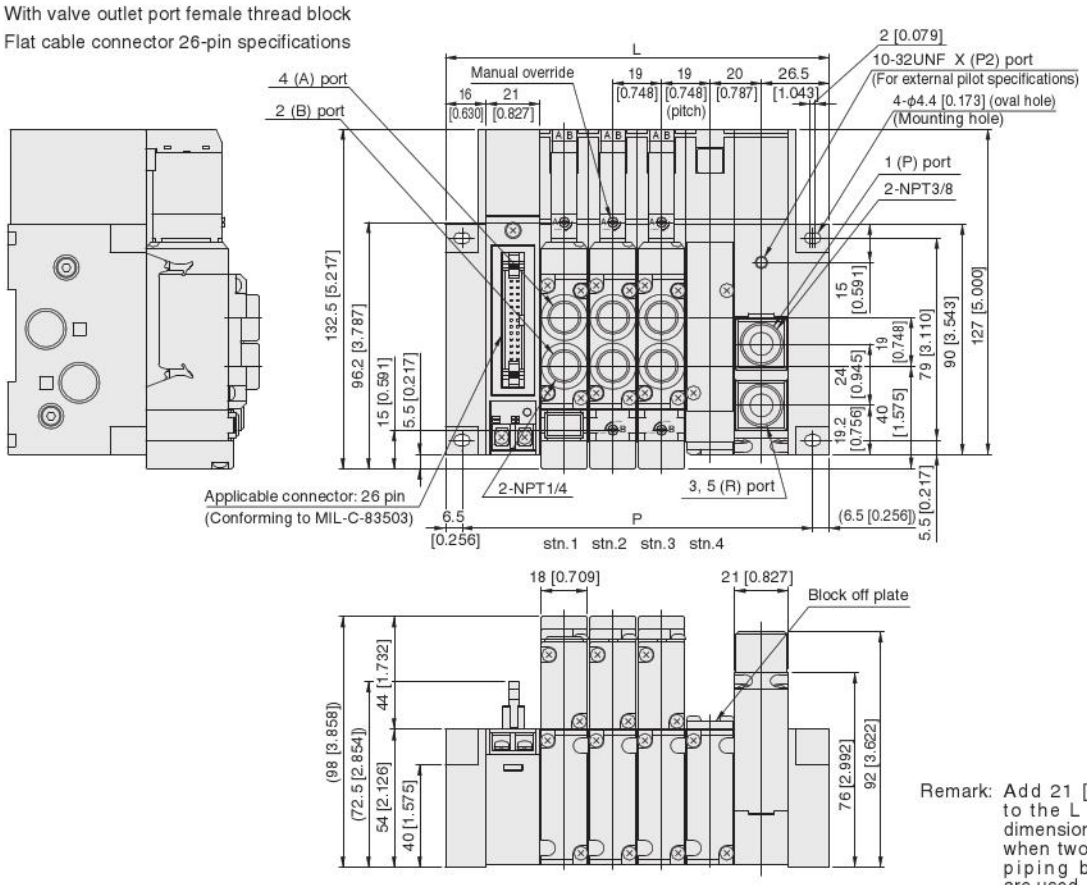


Remark: Add 21 [0.827] to the L and P dimensions right when two of the piping blocks are used.

### Unit dimensions

| Number of units | L | P |
|---|---|---|
| 2 | 112 [4.409] | 99 [3.898] |
| 3 | 131 [5.157] | 118 [4.646] |
| 4 | 150 [5.906] | 137 [5.394] |
| 5 | 169 [6.654] | 156 [6.142] |
| 6 | 188 [7.402] | 175 [6.890] |
| 7 | 207 [8.150] | 194 [7.638] |
| 8 | 226 [8.898] | 213 [8.386] |
| 9 | 245 [9.646] | 232 [9.134] |
| 10 | 264 [10.394] | 251 [9.882] |
| 11 | 283 [11.142] | 270 [10.630] |
| 12 | 302 [11.890] | 289 [11.378] |
| 13 | 321 [12.638] | 308 [12.126] |
| 14 | 340 [13.386] | 327 [12.874] |
| 15 | 359 [14.134] | 346 [13.622] |
| 16 | 378 [14.882] | 365 [14.370] |
| 17 | 397 [15.630] | 384 [15.118] |
| 18 | 416 [16.378] | 403 [15.866] |
| 19 | 435 [17.126] | 422 [16.614] |
| 20 | 454 [17.874] | 441 [17.362] |

## F18M Number of valves PHL Pilot specifications (Base piping type)

With manifold outlet port female thread block
D-sub connector 25-pin specifications

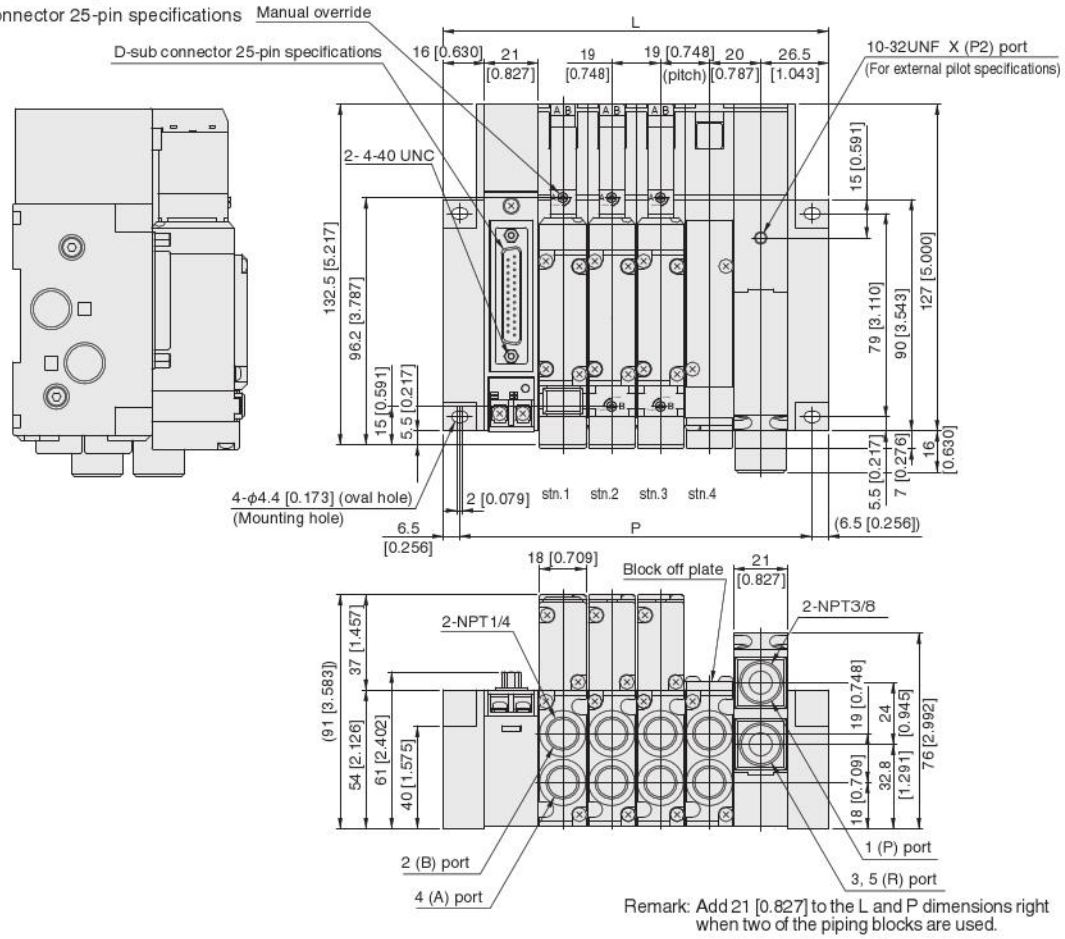


Remark: Add 21 [0.827] to the L and P dimensions right when two of the piping blocks are used.

### Unit dimensions

| Number of units | L | P |
|---|---|---|
| 2 | 112 [4.409] | 99 [3.898] |
| 3 | 131 [5.157] | 118 [4.646] |
| 4 | 150 [5.906] | 137 [5.394] |
| 5 | 169 [6.654] | 156 [6.142] |
| 6 | 188 [7.402] | 175 [6.890] |
| 7 | 207 [8.150] | 194 [7.638] |
| 8 | 226 [8.898] | 213 [8.386] |
| 9 | 245 [9.646] | 232 [9.134] |
| 10 | 264 [10.394] | 251 [9.882] |
| 11 | 283 [11.142] | 270 [10.630] |
| 12 | 302 [11.890] | 289 [11.378] |
| 13 | 321 [12.638] | 308 [12.126] |
| 14 | 340 [13.386] | 327 [12.874] |
| 15 | 359 [14.134] | 346 [13.622] |
| 16 | 378 [14.882] | 365 [14.370] |
| 17 | 397 [15.630] | 384 [15.118] |
| 18 | 416 [16.378] | 403 [15.866] |
| 19 | 435 [17.126] | 422 [16.614] |
| 20 | 454 [17.874] | 441 [17.362] |

Remark

## F18M Number of valves PH Pilot specifications (Direct piping type)

With valve outlet port female thread block
D-sub connector 25-pin specifications

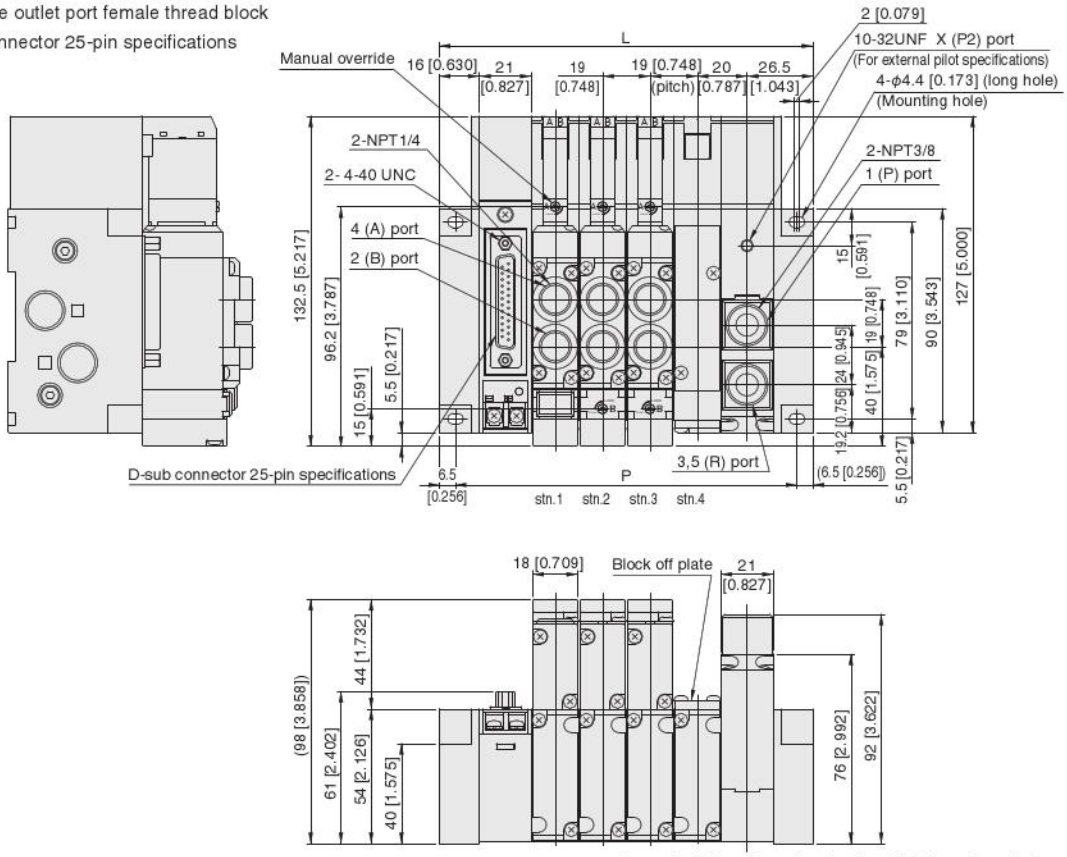


Remark: Add 21 [0.827] to the L and P dimensions right when two of the piping blocks are used.

### Unit dimensions

| Number of units | L | P |
|---|---|---|
| 2 | 112 [4.409] | 99 [3.898] |
| 3 | 131 [5.157] | 118 [4.646] |
| 4 | 150 [5.906] | 137 [5.394] |
| 5 | 169 [6.654] | 156 [6.142] |
| 6 | 188 [7.402] | 175 [6.890] |
| 7 | 207 [8.150] | 194 [7.638] |
| 8 | 226 [8.898] | 213 [8.386] |
| 9 | 245 [9.646] | 232 [9.134] |
| 10 | 264 [10.394] | 251 [9.882] |
| 11 | 283 [11.142] | 270 [10.630] |
| 12 | 302 [11.890] | 289 [11.378] |
| 13 | 321 [12.638] | 308 [12.126] |
| 14 | 340 [13.386] | 327 [12.874] |
| 15 | 359 [14.134] | 346 [13.622] |
| 16 | 378 [14.882] | 365 [14.370] |
| 17 | 397 [15.630] | 384 [15.118] |
| 18 | 416 [16.378] | 403 [15.866] |
| 19 | 435 [17.126] | 422 [16.614] |
| 20 | 454 [17.874] | 441 [17.362] |

Remark

## F18M Number of valves PHL Pilot specifications (Base piping type)

With manifold outlet port female thread block
D-sub connector 37-pin specifications

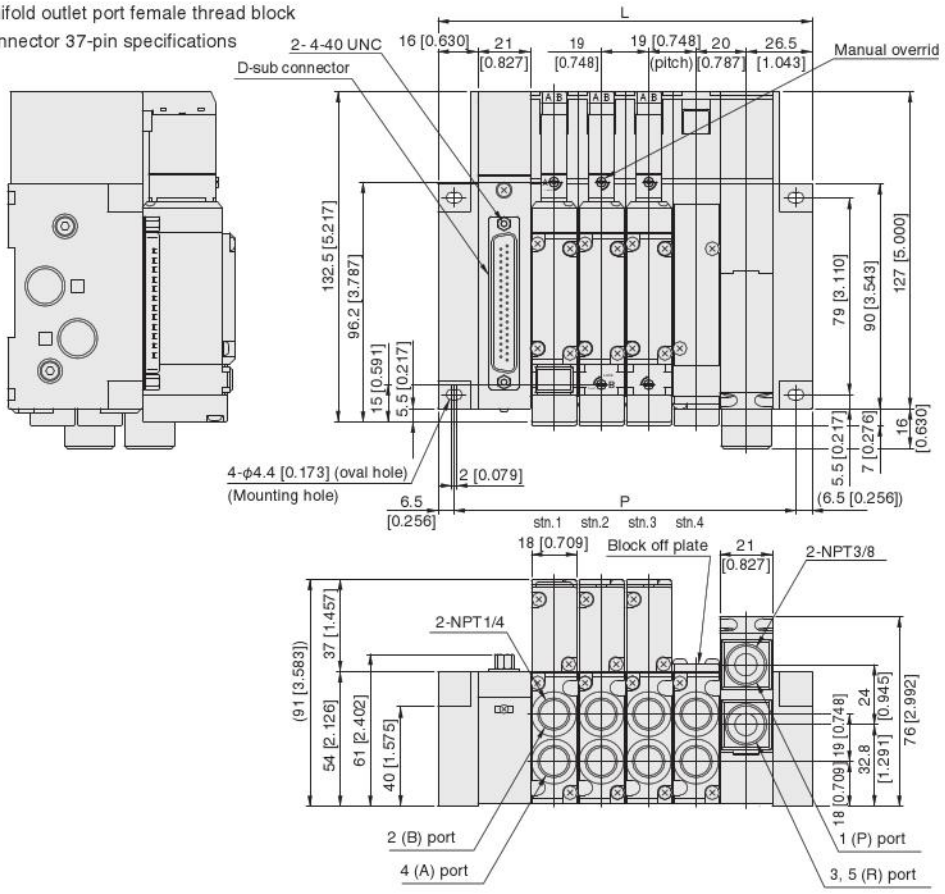


Remark: Add 21 [0.827] to the L and P dimensions right when two of the piping blocks are used.

### Unit dimensions

| Number of units | L | P |
|---|---|---|
| 2 | 112 [4.409] | 99 [3.898] |
| 3 | 131 [5.157] | 118 [4.646] |
| 4 | 150 [5.906] | 137 [5.394] |
| 5 | 169 [6.654] | 156 [6.142] |
| 6 | 188 [7.402] | 175 [6.890] |
| 7 | 207 [8.150] | 194 [7.638] |
| 8 | 226 [8.898] | 213 [8.386] |
| 9 | 245 [9.646] | 232 [9.134] |
| 10 | 264 [10.394] | 251 [9.882] |
| 11 | 283 [11.142] | 270 [10.630] |
| 12 | 302 [11.890] | 289 [11.378] |
| 13 | 321 [12.638] | 308 [12.126] |
| 14 | 340 [13.386] | 327 [12.874] |
| 15 | 359 [14.134] | 346 [13.622] |
| 16 | 378 [14.882] | 365 [14.370] |
| 17 | 397 [15.630] | 384 [15.118] |
| 18 | 416 [16.378] | 403 [15.866] |
| 19 | 435 [17.126] | 422 [16.614] |
| 20 | 454 [17.874] | 441 [17.362] |

Remark

## F18M Number of valves PH Pilot specifications (Direct piping type)

With valve outlet port female thread block
D-sub connector 37-pin specifications

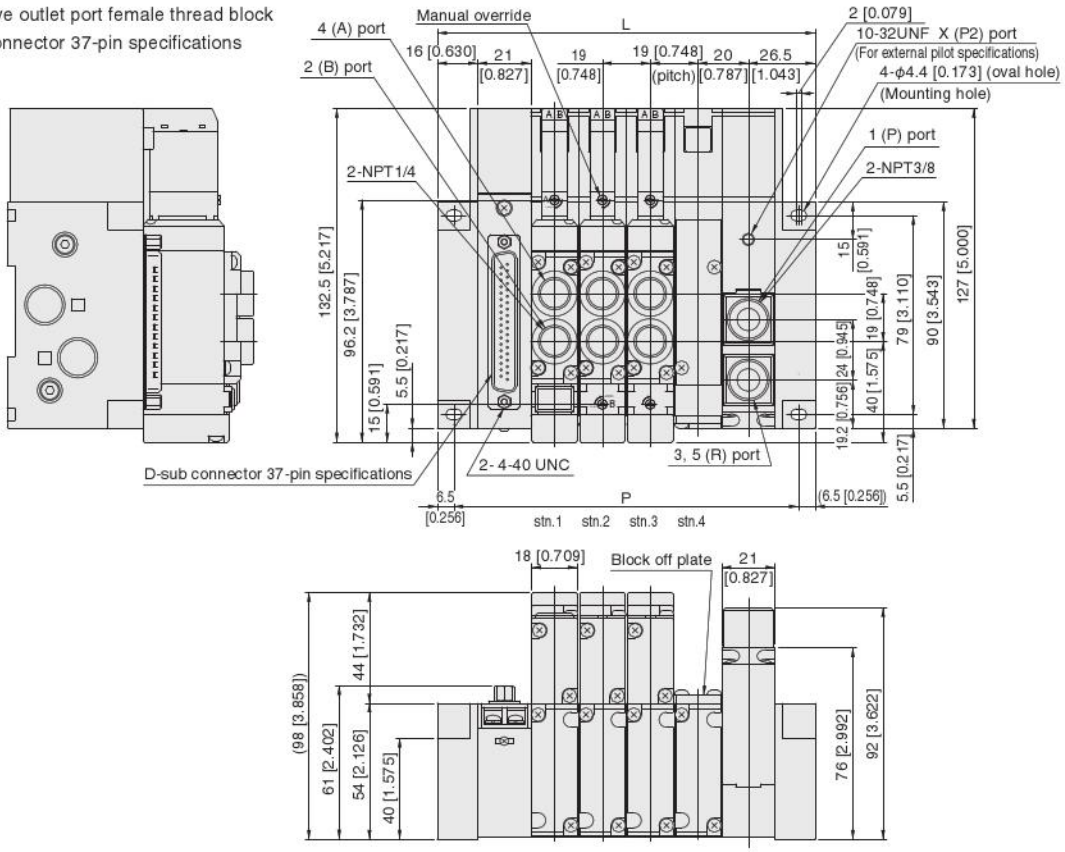


Remark: Add 21 [0.827] to the L and P dimensions right when two of the piping blocks are used.

### Unit dimensions

| Number of units | L | P |
|---|---|---|
| 2 | 112 [4.409] | 99 [3.898] |
| 3 | 131 [5.157] | 118 [4.646] |
| 4 | 150 [5.906] | 137 [5.394] |
| 5 | 169 [6.654] | 156 [6.142] |
| 6 | 188 [7.402] | 175 [6.890] |
| 7 | 207 [8.150] | 194 [7.638] |
| 8 | 226 [8.898] | 213 [8.386] |
| 9 | 245 [9.646] | 232 [9.134] |
| 10 | 264 [10.394] | 251 [9.882] |
| 11 | 283 [11.142] | 270 [10.630] |
| 12 | 302 [11.890] | 289 [11.378] |
| 13 | 321 [12.638] | 308 [12.126] |
| 14 | 340 [13.386] | 327 [12.874] |
| 15 | 359 [14.134] | 346 [13.622] |
| 16 | 378 [14.882] | 365 [14.370] |
| 17 | 397 [15.630] | 384 [15.118] |
| 18 | 416 [16.378] | 403 [15.866] |
| 19 | 435 [17.126] | 422 [16.614] |
| 20 | 454 [17.874] | 441 [17.362] |

Remark

Combination of F18MPJ and F18-CONT

## F18M Number of valves PHL Pilot specifications (Base piping type)

With manifold outlet port female thread block

Terminal block type

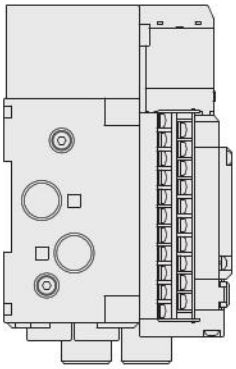

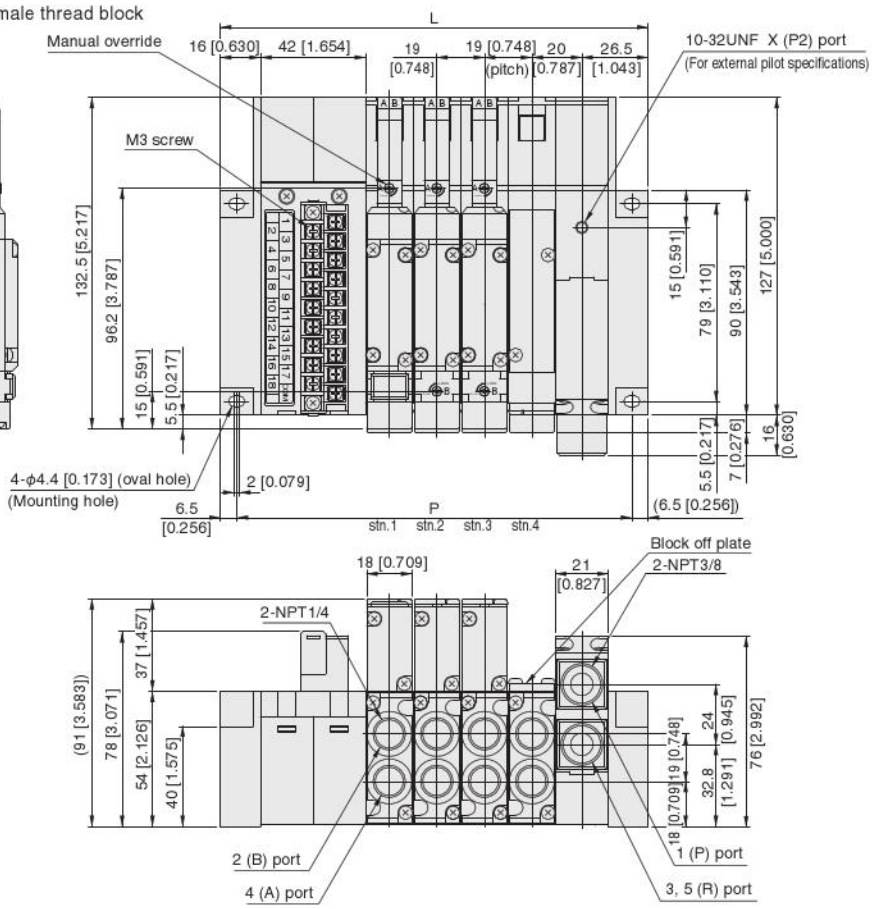


### Unit dimensions

| Number of units | L | P |
|---|---|---|
| 2 | 133 [5.236] | 120 [4.724] |
| 3 | 152 [5.984] | 139 [5.472] |
| 4 | 171 [6.732] | 158 [6.220] |
| 5 | 190 [7.480] | 177 [6.969] |
| 6 | 209 [8.228] | 196 [7.717] |
| 7 | 228 [8.976] | 215 [8.465] |
| 8 | 247 [9.724] | 234 [9.213] |
| 9 | 266 [10.472] | 253 [9.961] |
| 10 | 285 [11.220] | 272 [10.709] |
| 11 | 304 [11.969] | 291 [11.457] |
| 12 | 323 [12.717] | 310 [12.205] |
| 13 | 342 [13.465] | 329 [12.953] |
| 14 | 361 [14.213] | 348 [13.701] |
| 15 | 380 [14.961] | 367 [14.449] |
| 16 | 399 [15.709] | 386 [15.197] |
| 17 | 418 [16.457] | 405 [15.945] |
| 18 | 437 [17.205] | 424 [16.693] |

Remark: Add 21 [0.827] to the L and P dimensions above when two of the piping blocks are used.

## F18M Number of valves PH Pilot specifications (Direct piping type)

With valve outlet port female thread block

Terminal block type

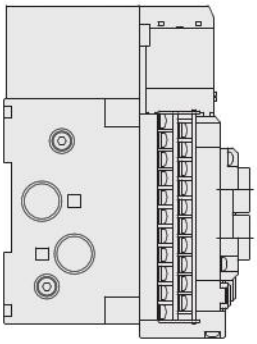

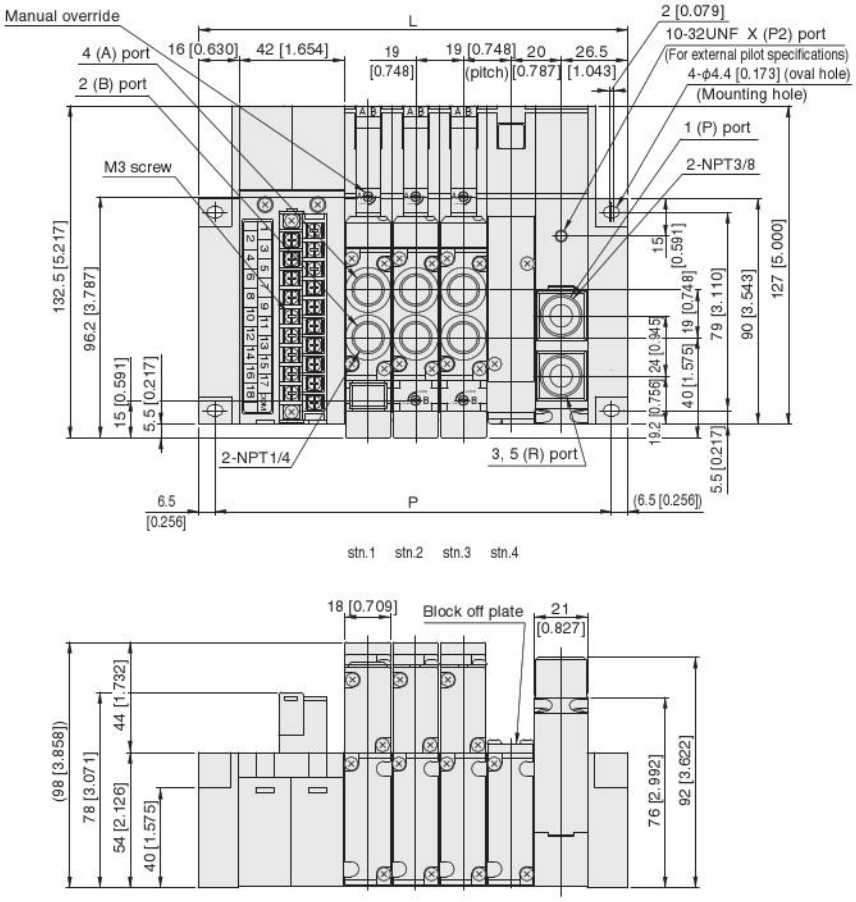


### Unit dimensions

| Number of units | L | P |
|---|---|---|
| 2 | 133 [5.236] | 120 [4.724] |
| 3 | 152 [5.984] | 139 [5.472] |
| 4 | 171 [6.732] | 158 [6.220] |
| 5 | 190 [7.480] | 177 [6.969] |
| 6 | 209 [8.228] | 196 [7.717] |
| 7 | 228 [8.976] | 215 [8.465] |
| 8 | 247 [9.724] | 234 [9.213] |
| 9 | 266 [10.472] | 253 [9.961] |
| 10 | 285 [11.220] | 272 [10.709] |
| 11 | 304 [11.969] | 291 [11.457] |
| 12 | 323 [12.717] | 310 [12.205] |
| 13 | 342 [13.465] | 329 [12.953] |
| 14 | 361 [14.213] | 348 [13.701] |
| 15 | 380 [14.961] | 367 [14.449] |
| 16 | 399 [15.709] | 386 [15.197] |
| 17 | 418 [16.457] | 405 [15.945] |
| 18 | 437 [17.205] | 424 [16.693] |

Remark: Add 21 [0.827] to the L and P dimensions above when two of the piping blocks are used.

## Dimensions of F18 series serial transmission compatible manifold mm [in]

* For CompoNet compatible dimensions, see page 154.

### F18M Number of valves S J/M Pilot specifications (Base piping type)

F18MSJ

With manifold outlet port dual use fitting block

(Models that support integrated serial transmission block)

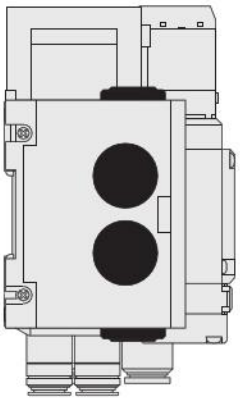

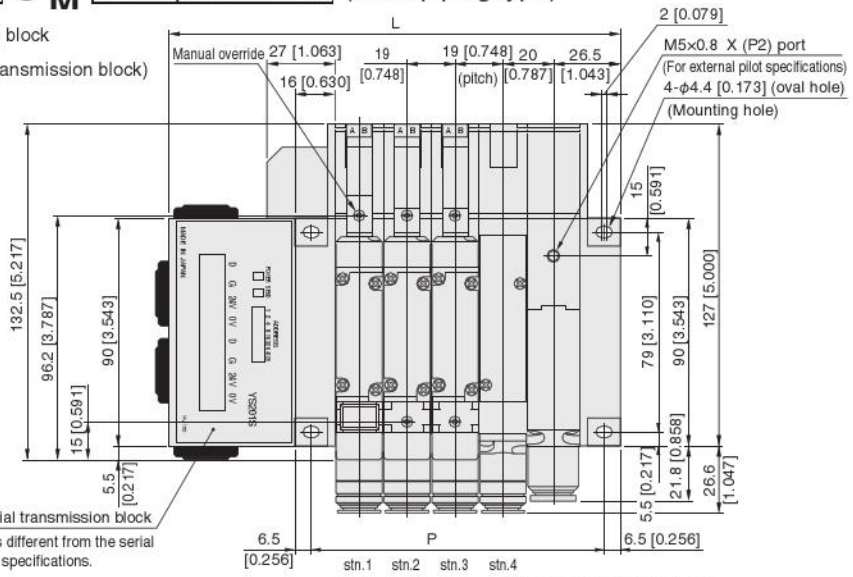


Note: The panel design is different from the serial transmission block specifications.

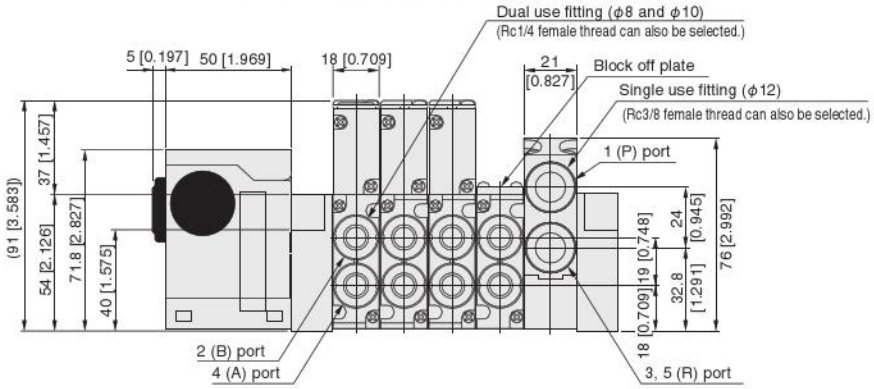


### F18M Number of valves S (Direct piping type)

F18MS

With valve outlet port dual use fitting block

(Models that support integrated serial transmission block)

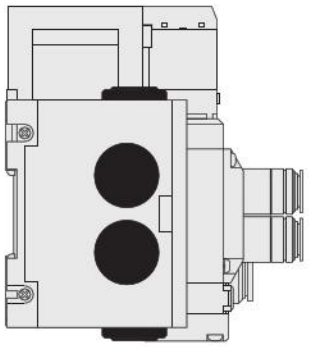

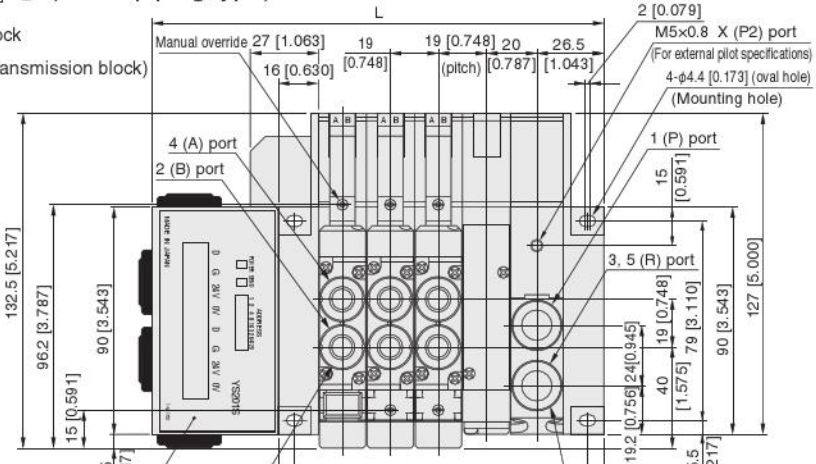


Note: The panel design is different from the serial transmission block specifications.

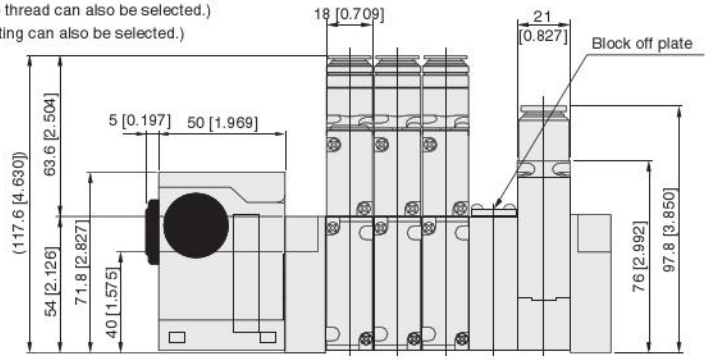


### Unit dimensions

| Number of units | L | P |
|---|---|---|
| 2 | 141 [5.551] | 78 [3.071] |
| 3 | 160 [6.299] | 97 [3.819] |
| 4 | 179 [7.047] | 116 [4.567] |
| 5 | 198 [7.795] | 135 [5.315] |
| 6 | 217 [8.543] | 154 [6.063] |
| 7 | 236 [9.291] | 173 [6.811] |
| 8 | 255 [10.039] | 192 [7.559] |
| 9 | 274 [10.787] | 211 [8.307] |
| 10 | 293 [11.535] | 230 [9.055] |
| 11 | 312 [12.283] | 249 [9.803] |
| 12 | 331 [13.031] | 268 [10.551] |
| 13 | 350 [13.780] | 287 [11.299] |
| 14 | 369 [14.528] | 306 [12.047] |
| 15 | 388 [15.276] | 325 [12.795] |
| 16 | 407 [16.024] | 344 [13.543] |

Remark: Add 21 [0.827] to the L and P dimensions above when two of the piping blocks are used.

## Dimensions of F18 series serial transmission compatible manifold mm [in]

* For CompoNet compatible dimensions, see page 154.

### F18M Number of valves SHL Pilot specifications (Base piping type)

F18MSJ

With manifold outlet port female thread block

(Models that support integrated serial transmission block)

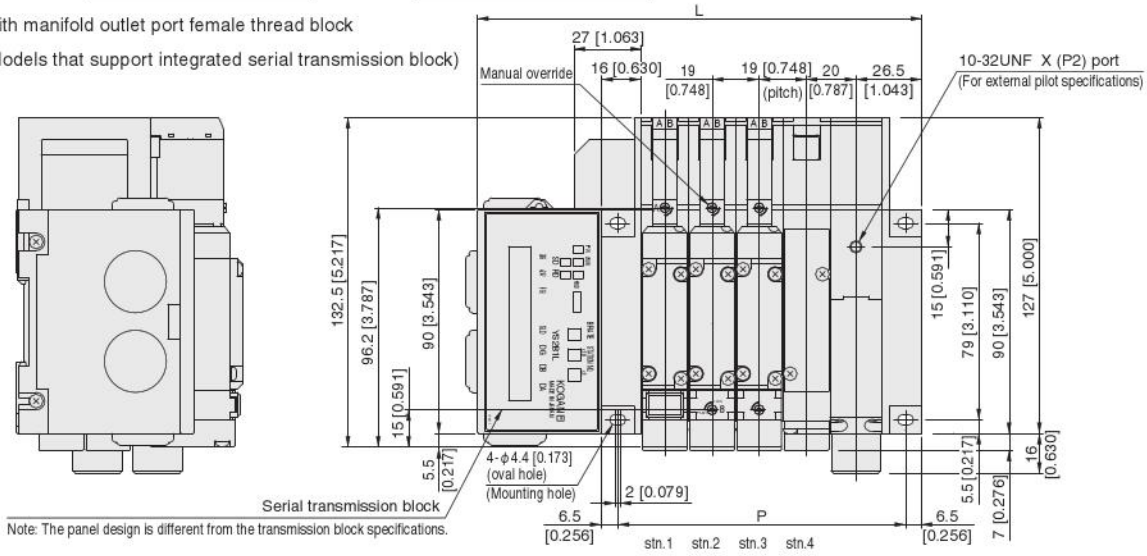


Note: The panel design is different from the transmission block specifications.

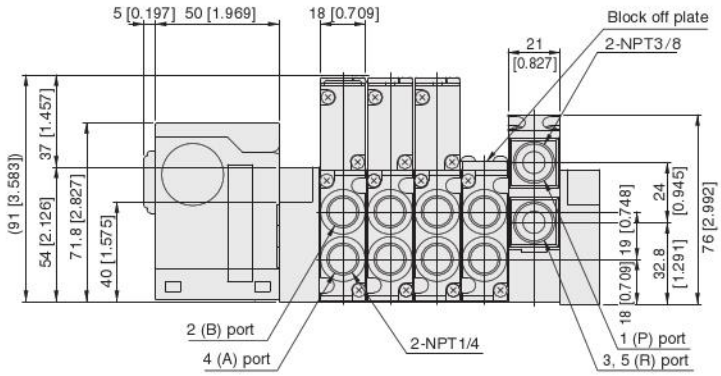


### F18M Number of valves S (Direct piping type)

F18MS

With valve outlet port female thread block

(Models that support integrated serial transmission block)

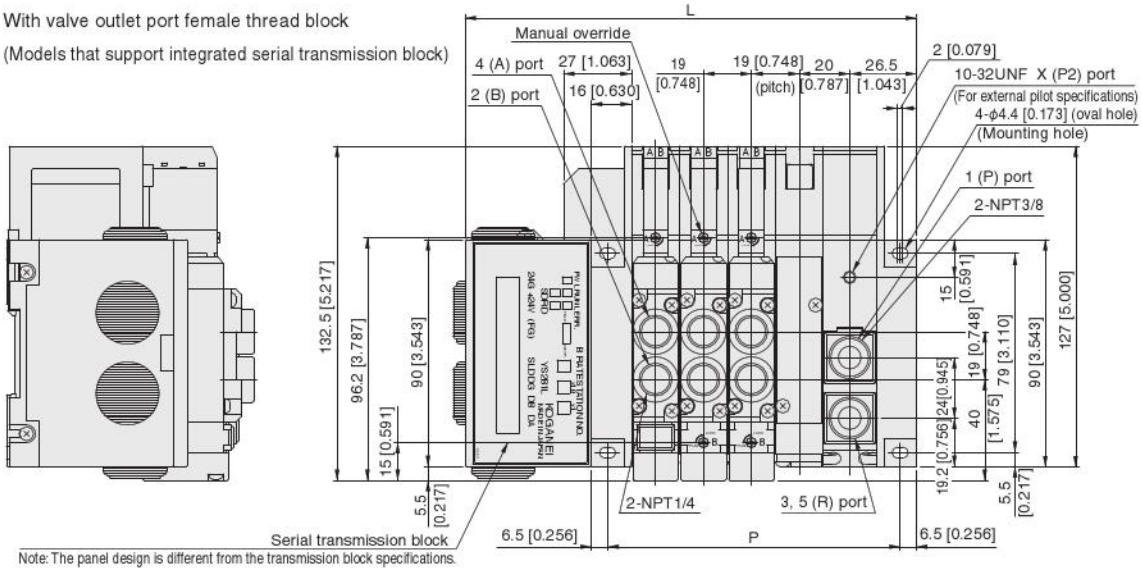


Note: The panel design is different from the transmission block specifications.

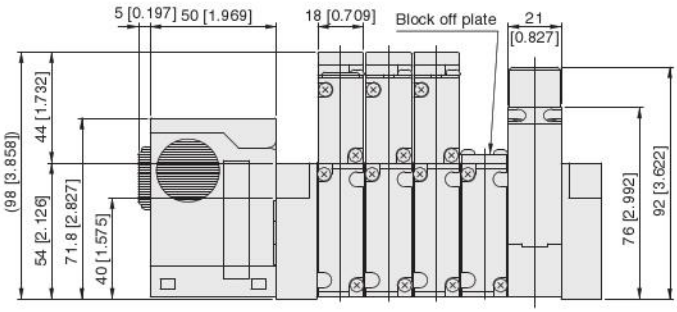


### Unit dimensions

| Number of units | L | P |
|---|---|---|
| 2 | 141 [5.551] | 78 [3.071] |
| 3 | 160 [6.299] | 97 [3.819] |
| 4 | 179 [7.047] | 116 [4.567] |
| 5 | 198 [7.795] | 135 [5.315] |
| 6 | 217 [8.543] | 154 [6.063] |
| 7 | 236 [9.291] | 173 [6.811] |
| 8 | 255 [10.039] | 192 [7.559] |
| 9 | 274 [10.787] | 211 [8.307] |
| 10 | 293 [11.535] | 230 [9.055] |
| 11 | 312 [12.283] | 249 [9.803] |
| 12 | 331 [13.031] | 268 [10.551] |
| 13 | 350 [13.780] | 287 [11.299] |
| 14 | 369 [14.528] | 306 [12.047] |
| 15 | 388 [15.276] | 325 [12.795] |
| 16 | 407 [16.024] | 344 [13.543] |

Remark: Add 21 [0.827] to the L and P dimensions above when two of the piping blocks are used.

## F18M [Number of valves] S J/M [Pilot specifications] (Base piping type)

With manifold outlet port dual use fitting block

(Models that support stand alone transmission block)

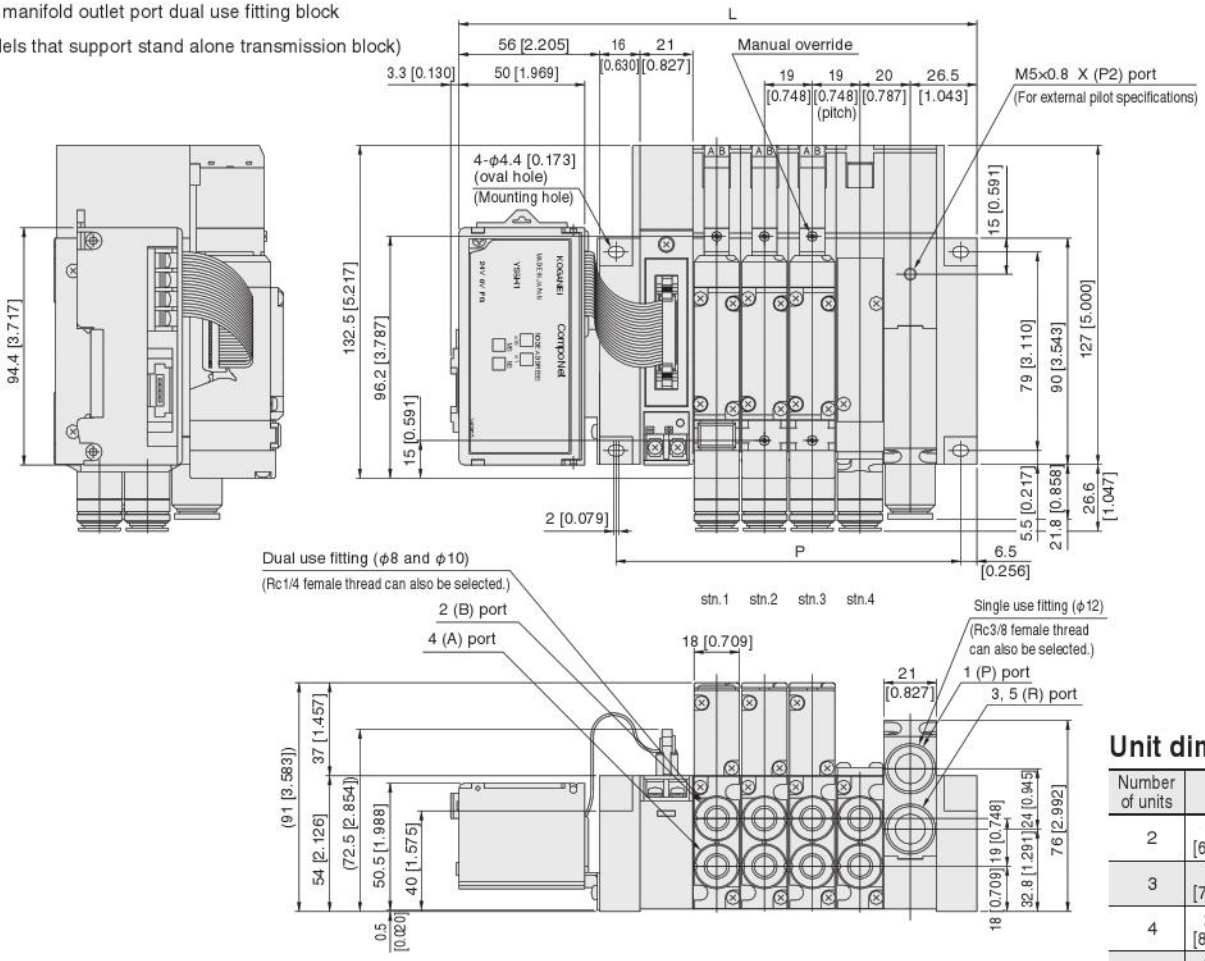


* The communication connectors are sold by Omron Corporation. Contact Omron Corporation for details.

## Unit dimensions

| Number of units | L | P |
|---|---|---|
| 2 | 168 [6.614] | 99 [3.898] |
| 3 | 187 [7.362] | 118 [4.646] |
| 4 | 206 [8.110] | 137 [5.394] |
| 5 | 225 [8.858] | 156 [6.142] |
| 6 | 244 [9.606] | 175 [6.890] |
| 7 | 263 [10.354] | 194 [7.638] |
| 8 | 282 [11.102] | 213 [8.386] |
| 9 | 301 [11.850] | 232 [9.134] |
| 10 | 320 [12.598] | 251 [9.882] |
| 11 | 339 [13.346] | 270 [10.630] |
| 12 | 358 [14.094] | 289 [11.378] |
| 13 | 377 [14.843] | 308 [12.126] |
| 14 | 396 [15.591] | 327 [12.874] |
| 15 | 415 [16.339] | 346 [13.622] |
| 16 | 434 [17.087] | 365 [14.370] |

Remark: Add 21 [0.827] to the L and P dimensions above when two of the piping blocks are used.

## Additional Parts (available separately)

●Muffler: **KM-J12** [for both plug-in and non-plug-in]

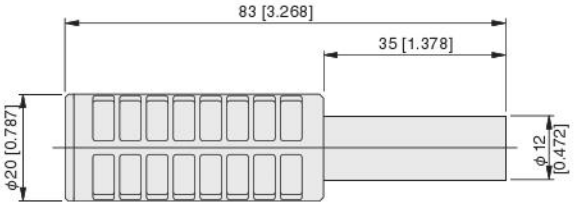


●Muffler: **KM-J8** [for individual exhaust spacer only]

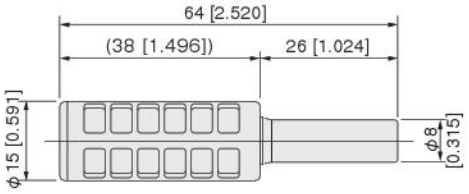


●Muffler: **KM-J10** [for individual exhaust spacer only]

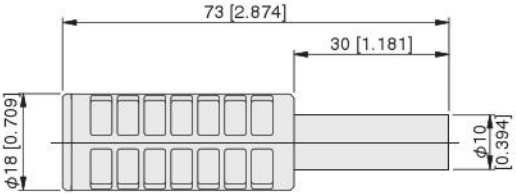


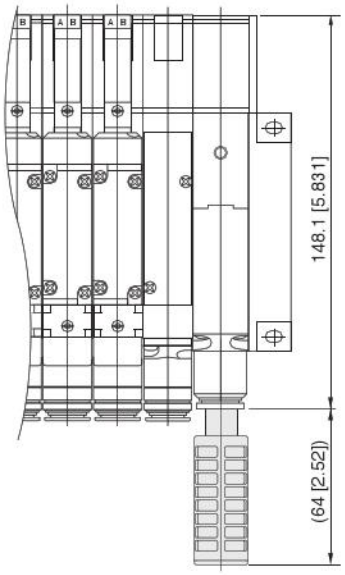

## F18M Number of valves SHL Pilot specifications (Base piping type)

With manifold outlet port female thread block

(Models that support stand alone transmission block)

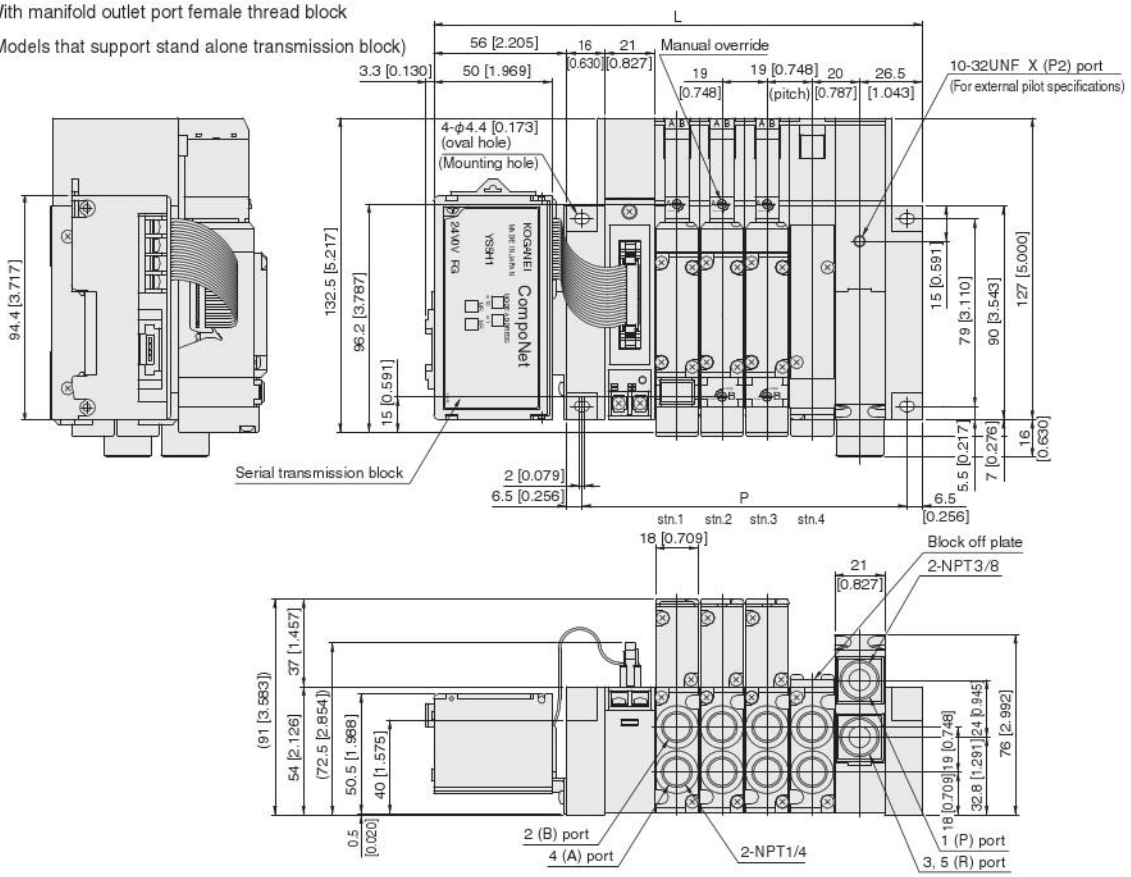


* The communication connectors are sold by Omron Corporation. Contact Omron Corporation for details.

### Unit dimensions

| Number of units | L | P |
|---|---|---|
| 2 | 168 [6.614] | 99 [3.898] |
| 3 | 187 [7.362] | 118 [4.646] |
| 4 | 206 [8.110] | 137 [5.394] |
| 5 | 225 [8.858] | 156 [6.142] |
| 6 | 244 [9.606] | 175 [6.890] |
| 7 | 263 [10.354] | 194 [7.638] |
| 8 | 282 [11.102] | 213 [8.386] |
| 9 | 301 [11.850] | 232 [9.134] |
| 10 | 320 [12.598] | 251 [9.882] |
| 11 | 339 [13.346] | 270 [10.630] |
| 12 | 358 [14.094] | 289 [11.378] |
| 13 | 377 [14.843] | 308 [12.126] |
| 14 | 396 [15.591] | 327 [12.874] |
| 15 | 415 [16.339] | 346 [13.622] |
| 16 | 434 [17.087] | 365 [14.370] |

Remark: Add 21 [0.827] to the L and P dimensions above when two of the piping blocks are used.

## F18M Number of valves SH Pilot specifications (Direct piping type)

With valve outlet port female thread block

(Models that support stand alone transmission block)

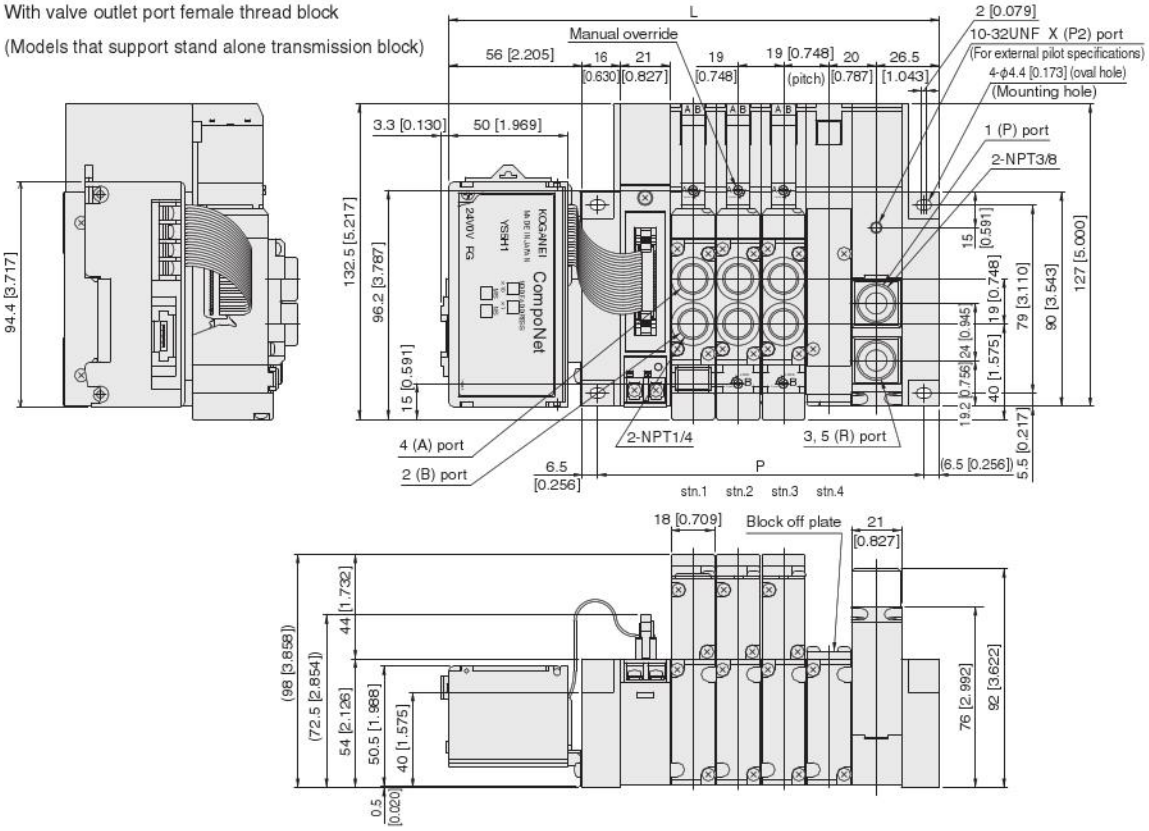


* The communication connectors are sold by Omron Corporation. Contact Omron Corporation for details.

### Unit dimensions

| Number of units | L | P |
|---|---|---|
| 2 | 168 [6.614] | 99 [3.898] |
| 3 | 187 [7.362] | 118 [4.646] |
| 4 | 206 [8.110] | 137 [5.394] |
| 5 | 225 [8.858] | 156 [6.142] |
| 6 | 244 [9.606] | 175 [6.890] |
| 7 | 263 [10.354] | 194 [7.638] |
| 8 | 282 [11.102] | 213 [8.386] |
| 9 | 301 [11.850] | 232 [9.134] |
| 10 | 320 [12.598] | 251 [9.882] |
| 11 | 339 [13.346] | 270 [10.630] |
| 12 | 358 [14.094] | 289 [11.378] |
| 13 | 377 [14.843] | 308 [12.126] |
| 14 | 396 [15.591] | 327 [12.874] |
| 15 | 415 [16.339] | 346 [13.622] |
| 16 | 434 [17.087] | 365 [14.370] |

Remark: Add 21 [0.827] to the L and P dimensions above when two of the piping blocks are used.

# F Series Specifications confirmation Form

## INDEX


**■F10, F15 Series**

Monoblock Manifold A Type (Base Piping Type) — 202
Monoblock Manifold F Type (Direct Piping Type) — 204
Monoblock Manifold A Type, Wire-Saving Type (Base Piping Type) — 206
Monoblock Manifold F Type, Wire-Saving Type (Direct Piping Type) — 208
PC Board Manifold A Type (Base Piping Type) — 210
PC Board Manifold F Type (Direct Piping Type) — 212
Split Manifold Non-Plug-in Type — 214
Split Manifold Plug-in Type — 216
Serial Transmission Compatible Manifold — 218

**■F18 Series**

Monoblock Manifold A Type (Base Piping Type) — 220
Monoblock Manifold F Type (Direct Piping Type) — 221
Split Manifold Non-Plug-in Type — 222
Split Manifold Plug-in Type — 224
Serial Transmission Compatible Manifold — 226

# Example of Specifications Confirmation Form

When ordering F series manifolds, use this specifications confirmation form for complex model configurations, for confirming specifications, etc.
Using the example below for reference, fill out the required items in the "Specifications confirmation Forms" found on p.202 and up, and send it.
(Make copies of the Specifications Confirmation Form for your use.)

## F10, F15 Series

**Monoblock Manifold**
**A Type (Base Piping Type)**

Order Date Month/ Day/ Year/

| | |
|---|---|
| Company name | |
| Contact person | |
| Order No. | |

## Specifications Confirmation Form 1/2

• Fill in selections inside the thick-lined boxes.

Manifold model

**F [10] M [8] A/AH [J] [ ]**

**Pilot specification**
**Blank**: Internal pilot manifold
**G** : External pilot manifold

**Valve units**
**2** to **20**

**Manifold outlet specification**
**J** : With dual use fitting blocks
**M** : With female thread blocks
**L** : With selectable fitting blocks

**Valve size**
**10**: 10mm width
**15**: 15mm width

Mounting valve model

**stn. [ ] F [Valve size] T [Valve specification] [ ] - [Note 3] - A1 - [PS] - [Note 4] - [Note 8] - [Note 5] [DC24V]**

**Operation type**
**Blank**: Internal pilot type[Note1]
**G** : External pilot type (for positive pressure)[Note2]
**V** : External pilot type (for vacuum)[Note2]

**Manual override**
**Blank**: Manual override button
**R** : Manual override lever[Note3]
**83** : Protruding locking type[Note11]

**Wiring specification**
**Blank**: L type plug connector, Without connector
**PN** : S type plug connector, Without connector
**PS** : S type plug connector, Lead wire length 300mm [11.8in.]
**PL** : L type plug connector, Lead wire length 300mm [11.8in.]
**PS3** : S type plug connector, Lead wire length 3000mm [118in.]
**PL3** : L type plug connector, Lead wire length 3000mm [118in.]
**CPS** : Pre-wired positive common terminal S type plug connector, Lead wire length 300mm [11.8in.]
**CPL** : Pre-wired positive common terminal L type plug connector, Lead wire length 300mm [11.8in.]
**CPS3** : Pre-wired positive common terminal S type plug connector, Lead wire length 3000mm [118in.]
**CPL3** : Pre-wired positive common terminal L type plug connector, Lead wire length 3000mm [118in.]
**39L** : DIN connector type with indicator[Note12]
**39N** : DIN connector type without indicator[Note12]

**Back pressure prevention valve**[Note8]
**Blank**: No back pressure prevention valve
**E1** : With back pressure prevention valve

**Individual air supply and exhaust apacer, stop valve**[Note5]
**Blank**: No spacer and no stop valve
**NPM** : Individual air supply spacer (with M5 female thread for F10)[Note13]
**NP6** : Individual air supply spacer (with $\phi$6 fitting for F15)[Note13]
**NP8** : Individual air supply spacer (with $\phi$8 fitting for F15)[Note13]
**NRM** : Individual exhaust spacer (with M5 female thread for F10)[Note13]
**NR6** : Individual exhaust spacer (with $\phi$6 fitting for F15)[Note13]
**NR8** : Individual exhaust spacer (with $\phi$8 fitting for F15)[Note13]
**STP** : With stop valve[Note1]

**Voltage**
**DC12V**[Note9]
**DC24V**
**AC100V**[Note10,13]
**AC120V**[Note10]
**AC240V**[Note10,11]

**Manifold fitting specifications**[Note4]
Can be selected only when the manifold type is **A** and the manifold outlet specification is **L** (with selectable fitting blocks (metric))
**J5** : Manifold side outlet port with single use fitting block (**F10**: $\phi$4, **F15**: $\phi$6)
**J6** : Manifold side outlet port with single use fitting block (**F10**: $\phi$6, **F15**: $\phi$8)
**M** : Manifold side outlet port with female thread block (**F10**: M5X0.8, **F15**: Rc1/8)
**J5A** : Manifold side outlet port with single use fitting block, 3-port normally closed (NC) (**F10**: $\phi$4, **F15**: $\phi$6)
**J5B** : Manifold side outlet port with single use fitting block, 3-port normally open (NO) (**F10**: $\phi$4, **F15**: $\phi$6)
**J6A** : Manifold side outlet port with single use fitting block, 3-port normally closed (NC) (**F10**: $\phi$6, **F15**: $\phi$8)
**J6B** : Manifold side outlet port with single use fitting block, 3-port normally open (NO) (**F10**: $\phi$6, **F15**: $\phi$8)
**MA** : Manifold side outlet port with female thread block, 3-port mormally closed (NC) (**F10**: M5X0.8, **F15**: Rc1/8)
**MB** : Manifold side outlet port with female thread block, 3-port normally open (NO) (**F10**: M5X0.8, **F15**: Rc1/8)

Can be selected only when the manifold type is **AH** and the manifold outlet specification is **L** (with selectable fitting blocks (imperial))
**MH** : Manifold side outlet port with female thread block (**F10**:10-32UNF, **F15**: NPT1/8)
**MAH** : Manifold side outlet port with female thread block, 3-port mormally closed (NC) (**F10**:10-32UNF, **F15**: NPT1/8)
**MBH** : Manifold side outlet port with female thread block, 3-port normally open (NO) (**F10**:10-32UNF, **F15**: NPT1/8)

Enter ○ in each designated station in tables on the next page.

# F10, F15 Series

### Monoblock Manifold A Type (Base Piping Type)

# Specifications Confirmation Form 2/2

※For specifying the valve and block-off plate to be mounted at each station, enter ○ in each applicable box below.

| Mounting valve models | Mounting valve, block-off plate \ Station | | 1 | 2 | 3 | 4 | 5 | 6 | 7 | 8 | 9 | 10 | 11 | 12 | 13 | 14 | 15 | 16 | 17 | 18 | 19 | 20 |
|---|---|---|---|---|---|---|---|---|---|---|---|---|---|---|---|---|---|---|---|---|---|---|
| | F □ T0 | 2-position, for single solenoid only | ○ | ○ | | | | | | | | | | | | | | | | | | |
| | F □ T1 | 2-position, single solenoid specification | | | ○ | ○ | | | | | | | | | | | | | | | | |
| | F □ T2 | 2-position, double solenoid specification | | | | | ○ | ○ | | | | | | | | | | | | | | |
| | F □ T3 | 3-position, closed center | | | | | | | ○ | | | | | | | | | | | | | |
| | F □ T4[Note5] | 3-position, exhaust center | | | | | | | | ○ | | | | | | | | | | | | |
| | F □ T5[Note5] | 3-position, pressure center | | | | | | | | | | | | | | | | | | | | |
| | F □ TA[Note7] | Tandem 3-port (NC and NC) | | | | | | | | | | | | | | | | | | | | |
| | F □ TB[Note7] | Tandem 3-port (NO and NO) | | | | | | | | | | | | | | | | | | | | |
| | F □ TC[Note7] | Tandem 3-port (NC and NO) | | | | | | | | | | | | | | | | | | | | |
| | F □ LT0 | (Low current type) 2-position, for single solenoid only | | | | | | | | | | | | | | | | | | | | |
| | F □ LT1 | (Low current type) 2-position, single solenoid specification | | | | | | | | | | | | | | | | | | | | |
| | F □ LT2 | (Low current type) 2-position, double solenoid specification | | | | | | | | | | | | | | | | | | | | |
| | F □ LT3 | (Low current type) 3-position, closed center | | | | | | | | | | | | | | | | | | | | |
| | F □ LT4[Note5] | (Low current type) 3-position, exhaust center | | | | | | | | | | | | | | | | | | | | |
| | F □ LT5[Note5] | (Low current type) 3-position, pressure center | | | | | | | | | | | | | | | | | | | | |
| | F □ LTA[Note7] | (Low current type) Tandem 3-port (NC and NC) | | | | | | | | | | | | | | | | | | | | |
| | F □ LTB[Note7] | (Low current type) Tandem 3-port (NO and NO) | | | | | | | | | | | | | | | | | | | | |
| | F □ LTC[Note7] | (Low current type) Tandem 3-port (NC and NO) | | | | | | | | | | | | | | | | | | | | |
| | F □ BP | Block-off plate | | | | | | | | | | | | | | | | | | | | |
| | Manual override | R Manual override lever[Note3] | ○ | ○ | | | | | | | | | | | | | | | | | | |
| | | 83 Protruding locking type[Note11] | | | | | | | | | | | | | | | | | | | | |
| | Manifold fitting specification[Note4] (Manifold side outlet port) | J5 With single use fitting block | | | | | | | | | | | | | | | | | | | | |
| | | J6 With single use fitting block | | | | | | | | | | | | | | | | | | | | |
| | | M With female thread block | | | | | | | | | | | | | | | | | | | | |
| | | J5A With single use fitting block, 3-port normally closed (NC) | | | | | | | | | | | | | | | | | | | | |
| | | J5B With single use fitting block, 3-port normally open (NO) | | | | | | | | | | | | | | | | | | | | |
| | | J6A With single use fitting block, 3-port normally closed (NC) | | | | | | | | | | | | | | | | | | | | |
| | | J6B With single use fitting block, 3-port normally open (NO) | | | | | | | | | | | | | | | | | | | | |
| | | MA With female thread block, 3-port normally closed (NC) | | | | | | | | | | | | | | | | | | | | |
| | | MB With female thread block, 3-port normally open (NO) | | | | | | | | | | | | | | | | | | | | |
| | | MH With female thread block | | | | | | | | | | | | | | | | | | | | |
| | | MAH With female thread block, 3-port normally closed (NC) | | | | | | | | | | | | | | | | | | | | |
| | | MBH With female thread block, 3-port normally open (NO) | | | | | | | | | | | | | | | | | | | | |
| | E1[Note8] | Back pressure prevention valve | | | | | | | | | | | | | | | | | | | | |
| | NPM | Individual air supply spacer (with M5 female thread for F10) | | | ○ | ○ | | | | | | | | | | | | | | | | |
| | NP6 | Individual air supply spacer (with φ 6 fitting for F15) | | | | | | | | | | | | | | | | | | | | |
| | NP8 | Individual air supply spacer (with φ 8 fitting for F15) | | | | | | | | | | | | | | | | | | | | |
| | NRM | Individual exhaust spacer (with M5 female thread for F10) | | | | | | | | | | | | | | | | | | | | |
| | NR6 | Individual exhaust spacer (with φ 6 fitting for F15) | | | | | | | | | | | | | | | | | | | | |
| | NR8 | Individual exhaust spacer (with φ 8 fitting for F15) | | | | | | | | | | | | | | | | | | | | |
| | STP | With stop valve | | | | | | | | | | | | | | | | | | | | |

Notes:
1. Cannot be mounted on the external pilot manifold.
2. Cannot be mounted on the internal pilot manifold.
3. To designate a manual override lever, enter ○ in the manual override boxes of the designated station in the above table. When the valve specification is **T1** or **T2**, the manual override lever is placed only on the A side. This is not available with **-39**□.
4. When the manifold outlet specifications are **L** (with selectable fitting), select fitting specification for each station, and enter ○ in the manifold fitting specification boxes of the above table. The 3-port specifications are only available in valve specification **T0**, **T1**, and **T2**.
5. When mounting the individual air supply or exhaust spacer or stop valve, enter ○ in the spacer or stop valve boxes of the designated stations in the above table.
6. Not available in the vacuum valves.
7. Not availabale in external pilot type and vacuum valves.
8. When mounting the back pressure prevention valve, enter ○ in the spacer boxes of the designated stations in the above table. Not available with the individual exhaust spacer and vacuum valve.
9. Not available in low-current type.
10. Not available in low-current type and tandem 3-port valves.
11. Only for wiring specification **-39**□.
12. Only for **F15** series and not available for valve specification **T1**, **TA**, **TB**, and **TC**. In addition, the valve is used only as a double solenoid for **T2**.
13. Not available with DIN connectors (**-39**□).

| Quantity | 5 set | Delivery | June 1 |
|---|---|---|---|

# F10, F15 Series

## Monoblock Manifold
## A Type (Base Piping Type)

Order Date Month/ Day/ Year/

| | |
|---|---|
| Company name | |
| Contact person | |
| Order No. | |

# Specifications Confirmation Form 1/2

• Fill in selections inside the thick-lined boxes.

**Manifold model**

**F□M□ A/AH □□**

**Valve size**
**10**: 10mm width
**15**: 15mm width

**Valve units**
**2** to **20**

**Manifold outlet specification**
**J** : With dual use fitting blocks
**M** : With female thread blocks
**L** : With selectable fitting blocks

**Pilot specification**
**Blank**: Internal pilot manifold
**G** : External pilot manifold

**Mounting valve model**

**stn. □ F** Valve size **T** Valve specification **□ - Note 3 - A1 - □ - Note 4 - Note 8 - Note 5 □**

**Operation type**
**Blank**: Internal pilot type[Note1]
**G** : External pilot type (for positive pressure)[Note2]
**V** : External pilot type (for vacuum)[Note2]

**Manual override**
**Blank**: Manual override button
**R** : Manual override lever[Note3]
**83** : Protruding locking type[Note11]

**Wiring specification**
**Blank**: L type plug connector, Without connector
**PN** : S type plug connector, Without connector
**PS** : S type plug connector, Lead wire length 300mm [11.8in.]
**PL** : L type plug connector, Lead wire length 300mm [11.8in.]
**PS3** : S type plug connector, Lead wire length 3000mm [118in.]
**PL3** : L type plug connector, Lead wire length 3000mm [118in.]
**CPS** : Pre-wired positive common terminal S type plug connector, Lead wire length 300mm [11.8in.]
**CPL** : Pre-wired positive common terminal L type plug connector, Lead wire length 300mm [11.8in.]
**CPS3**: Pre-wired positive common terminal S type plug connector, Lead wire length 3000mm [118in.]
**CPL3**: Pre-wired positive common terminal L type plug connector, Lead wire length 3000mm [118in.]
**39L** : DIN connector type with indicator[Note12]
**39N** : DIN connector type without indicator[Note12]

**Back pressure prevention valve**[Note8]
**Blank**: No back pressure prevention valve
**E1** : With back pressure prevention valve

**Individual air supply and exhaust apacer, stop valve**[Note5]
**Blank**: No spacer and no stop valve
**NPM** : Individual air supply spacer (with M5 female thread for F10)[Note13]
**NP6** : Individual air supply spacer (with $\phi$6 fitting for F15)[Note13]
**NP8** : Individual air supply spacer (with $\phi$8 fitting for F15)[Note13]
**NRM** : Individual exhaust spacer (with M5 female thread for F10)[Note13]
**NR6** : Individual exhaust spacer (with $\phi$6 fitting for F15)[Note13]
**NR8** : Individual exhaust spacer (with $\phi$8 fitting for F15)[Note13]
**STP** : With stop valve[Note1]

**Voltage**
**DC12V**[Note9]
**DC24V**
**AC100V**[Note10,13]
**AC120V**[Note10]
**AC240V**[Note10,11]

**Manifold fitting specifications**[Note4]
Can be selected only when the manifold type is **A** and the manifold outlet specification is **L** (with selectable fitting blocks (metric))
**J5** : Manifold side outlet port with single use fitting block (**F10**: $\phi$4, **F15**: $\phi$6)
**J6** : Manifold side outlet port with single use fitting block (**F10**: $\phi$6, **F15**: $\phi$8)
**M** : Manifold side outlet port with female thread block (**F10**: M5X0.8, **F15**: Rc1/8)
**J5A** : Manifold side outlet port with single use fitting block, 3-port normally closed (NC) (**F10**: $\phi$4, **F15**: $\phi$6)
**J5B** : Manifold side outlet port with single use fitting block, 3-port normally open (NO) (**F10**: $\phi$4, **F15**: $\phi$6)
**J6A** : Manifold side outlet port with single use fitting block, 3-port normally closed (NC) (**F10**: $\phi$6, **F15**: $\phi$8)
**J6B** : Manifold side outlet port with single use fitting block, 3-port normally open (NO) (**F10**: $\phi$6, **F15**: $\phi$8)
**MA** : Manifold side outlet port with female thread block, 3-port normally closed (NC) (**F10**: M5X0.8, **F15**: Rc1/8)
**MB** : Manifold side outlet port with female thread block, 3-port normally open (NO) (**F10**: M5X0.8, **F15**: Rc1/8)

Can be selected only when the manifold type is **AH** and the manifold outlet specification is **L** (with selectable fitting blocks (imperial))
**MH** : Manifold side outlet port with female thread block (**F10**:10-32UNF, **F15**: NPT1/8)
**MAH** : Manifold side outlet port with female thread block, 3-port normally closed (NC) (**F10**:10-32UNF, **F15**: NPT1/8)
**MBH** : Manifold side outlet port with female thread block, 3-port normally open (NO) (**F10**:10-32UNF, **F15**: NPT1/8)

Enter ○ in each designated station in tables on the next page.

# F10, F15 Series

## Monoblock Manifold A Type (Base Piping Type)

# Specifications Confirmation Form 2/2

※For specifying the valve and block-off plate to be mounted at each station, enter ○ in each applicable box below.

| Mounting valve models | Mounting valve, block-off plate \ Station | | 1 | 2 | 3 | 4 | 5 | 6 | 7 | 8 | 9 | 10 | 11 | 12 | 13 | 14 | 15 | 16 | 17 | 18 | 19 | 20 |
|---|---|---|---|---|---|---|---|---|---|---|---|---|---|---|---|---|---|---|---|---|---|---|
| | F □ T0 | 2-position, for single solenoid only | | | | | | | | | | | | | | | | | | | | |
| | F □ T1 | 2-position, single solenoid specification | | | | | | | | | | | | | | | | | | | | |
| | F □ T2 | 2-position, double solenoid specification | | | | | | | | | | | | | | | | | | | | |
| | F □ T3 | 3-position, closed center | | | | | | | | | | | | | | | | | | | | |
| | F □ T4[Note6] | 3-position, exhaust center | | | | | | | | | | | | | | | | | | | | |
| | F □ T5[Note6] | 3-position, pressure center | | | | | | | | | | | | | | | | | | | | |
| | F □ TA[Note7] | Tandem 3-port (NC and NC) | | | | | | | | | | | | | | | | | | | | |
| | F □ TB[Note7] | Tandem 3-port (NO and NO) | | | | | | | | | | | | | | | | | | | | |
| | F □ TC[Note7] | Tandem 3-port (NC and NO) | | | | | | | | | | | | | | | | | | | | |
| | F □ LT0 | (Low current type) 2-position, for single solenoid only | | | | | | | | | | | | | | | | | | | | |
| | F □ LT1 | (Low current type) 2-position, single solenoid specification | | | | | | | | | | | | | | | | | | | | |
| | F □ LT2 | (Low current type) 2-position, double solenoid specification | | | | | | | | | | | | | | | | | | | | |
| | F □ LT3 | (Low current type) 3-position, closed center | | | | | | | | | | | | | | | | | | | | |
| | F □ LT4[Note6] | (Low current type) 3-position, exhaust center | | | | | | | | | | | | | | | | | | | | |
| | F □ LT5[Note6] | (Low current type) 3-position, pressure center | | | | | | | | | | | | | | | | | | | | |
| | F □ LTA[Note7] | (Low current type) Tandem 3-port (NC and NC) | | | | | | | | | | | | | | | | | | | | |
| | F □ LTB[Note7] | (Low current type) Tandem 3-port (NO and NO) | | | | | | | | | | | | | | | | | | | | |
| | F □ LTC[Note7] | (Low current type) Tandem 3-port (NC and NO) | | | | | | | | | | | | | | | | | | | | |
| | F □ BP | Block-off plate | | | | | | | | | | | | | | | | | | | | |
| | Manual override | R Manual override lever[Note3] | | | | | | | | | | | | | | | | | | | | |
| | | 83 Protruding locking type[Note11] | | | | | | | | | | | | | | | | | | | | |
| | Manifold fitting specification[Note4] (Manifold side outlet port) | J5 With single use fitting block | | | | | | | | | | | | | | | | | | | | |
| | | J6 With single use fitting block | | | | | | | | | | | | | | | | | | | | |
| | | M With female thread block | | | | | | | | | | | | | | | | | | | | |
| | | J5A With single use fitting block, 3-port normally closed (NC) | | | | | | | | | | | | | | | | | | | | |
| | | J5B With single use fitting block, 3-port normally open (NO) | | | | | | | | | | | | | | | | | | | | |
| | | J6A With single use fitting block, 3-port normally closed (NC) | | | | | | | | | | | | | | | | | | | | |
| | | J6B With single use fitting block, 3-port normally open (NO) | | | | | | | | | | | | | | | | | | | | |
| | | MA With female thread block, 3-port normally closed (NC) | | | | | | | | | | | | | | | | | | | | |
| | | MB With female thread block, 3-port normally open (NO) | | | | | | | | | | | | | | | | | | | | |
| | | MH With female thread block | | | | | | | | | | | | | | | | | | | | |
| | | MAH With female thread block, 3-port normally closed (NC) | | | | | | | | | | | | | | | | | | | | |
| | | MBH With female thread block, 3-port normally open (NO) | | | | | | | | | | | | | | | | | | | | |
| | E1[Note8] | Back pressure prevention valve | | | | | | | | | | | | | | | | | | | | |
| | NPM | Individual air supply spacer (with M5 female thread for F10) | | | | | | | | | | | | | | | | | | | | |
| | NP6 | Individual air supply spacer (with $\phi$ 6 fitting for F15) | | | | | | | | | | | | | | | | | | | | |
| | NP8 | Individual air supply spacer (with $\phi$ 8 fitting for F15) | | | | | | | | | | | | | | | | | | | | |
| | NRM | Individual exhaust spacer (with M5 female thread for F10) | | | | | | | | | | | | | | | | | | | | |
| | NR6 | Individual exhaust spacer (with $\phi$ 6 fitting for F15) | | | | | | | | | | | | | | | | | | | | |
| | NR8 | Individual exhaust spacer (with $\phi$ 8 fitting for F15) | | | | | | | | | | | | | | | | | | | | |
| | STP | With stop valve | | | | | | | | | | | | | | | | | | | | |

Notes:
1. Cannot be mounted on the external pilot manifold.
2. Cannot be mounted on the internal pilot manifold.
3. To designate a manual override lever, enter ○ in the manual override boxes of the designated station in the above table. When the valve specification is **T1** or **T2**, the manual override lever is placed only on the A side. This is not available with **-39**□.
4. When the manifold outlet specifications are **L** (with selectable fitting), select fitting specification for each station, and enter ○ in the manifold fitting specification boxes of the above table. The 3-port specifications are only available in valve specification **T0**, **T1**, and **T2**.
5. When mounting the individual air supply or exhaust spacer or stop valve, enter ○ in the spacer or stop valve boxes of the designated stations in the above table.
6. Not available in the vacuum valves.
7. Not availabale in external pilot type and vacuum valves.
8. When mounting the back pressure prevention valve, enter ○ in the back pressure prevention valve boxes of the designated stations in the above table. Not available with the individual exhaust spacer and vacuum valve.
9. Not available in low-current type.
10. Not available in low-current type and tandem 3-port valves.
11. Only for wiring specification **-39**□.
12. Only for **F15** series and not available for valve specification **T1**, **TA**, **TB**, and **TC**. In addition, the valve is used only as a double solenoid for **T2**.
13. Not available with DIN connectors (**-39**□).

| Quantity set | Delivery |
|---|---|

# F10, F15 Series

## Monoblock Manifold
## F Type (Direct Piping Type)

| | Order Date Month/ Day/ Year/ |
|---|---|
| Company name | |
| Contact person | |
| Order No. | |

# Specifications Confirmation Form 1/2

• Fill in selections inside the thick-lined boxes.

Manifold model

**F** [ ] **M** [ ] **F** / **FH**

**Valve units**
**2** to **20**

**Valve size**
**10**: 10mm width
**15**: 15mm width

Mounting valve model

**stn.** [ ] **F** [Valve size] **T** [Valve specification] [Note 1] - [Note 2] - [ ] - [Note 4] - [Note 3] [ ]

**Manual override**
**Blank**: Manual override button
**R** : Manual override lever[Note1]
**83** : Protruding locking type[Note7]

**Valve outlet type**[Note2]
Can be selected only when the manifold type is **F** (metric).
**FJ** : With dual use fitting block (**F10**: $\phi$4 and $\phi$6, **F15**: $\phi$6 and $\phi$8)
**FJ5** : With single use fitting block (**F10**: $\phi$4, **F15**: $\phi$6)
**FJ6** : With single use fitting block (**F10**: $\phi$6, **F15**: $\phi$8)
**FM** : With female thread block (**F10**: M5X0.8, **F15**: Rc1/8)
**FJ5A** : With single use fitting block, 3-port normally closed (NC) (**F10**: $\phi$4, **F15**: $\phi$6)
**FJ5B** : With single use fitting block, 3-port normally open (NO) (**F10**: $\phi$4, **F15**: $\phi$6)
**FJ6A** : With single use fitting block, 3-port normally closed (NC) (**F10**: $\phi$6, **F15**: $\phi$8)
**FJ6B** : With single use fitting block, 3-port normally open (NO) (**F10**: $\phi$6, **F15**: $\phi$8)
**FMA** : With female thread block, 3-port mormally closed (NC) (**F10**: M5X0.8, **F15**: Rc1/8)
**FMB** : With female thread block, 3-port normally open (NO) (**F10**: M5X0.8, **F15**: Rc1/8)

Can be selected only when the manifold type is **FH** (imperial).
**FMH** : With female thread block (**F10**:10-32UNF, **F15**: NPT1/8)
**FMAH** : With female thread block, 3-port mormally closed (NC) (**F10**:10-32UNF, **F15**: NPT1/8)
**FMBH** : With female thread block, 3-port normally open (NO) (**F10**:10-32UNF, **F15**: NPT1/8)

**Wiring specification**
**Blank**: L type plug connector, Without connector
**PN** : S type plug connector, Without connector
**PS** : S type plug connector, Lead wire length 300mm [11.8in.]
**PL** : L type plug connector, Lead wire length 300mm [11.8in.]
**PS3** : S type plug connector, Lead wire length 3000mm [118in.]
**PL3** : L type plug connector, Lead wire length 3000mm [118in.]
**CPS** : Pre-wired positive common terminal S type plug connector, Lead wire length 300mm [11.8in.]
**CPL** : Pre-wired positive common terminal L type plug connector, Lead wire length 300mm [11.8in.]
**CPS3** : Pre-wired positive common terminal S type plug connector, Lead wire length 3000mm [118in.]
**CPL3** : Pre-wired positive common terminal L type plug connector, Lead wire length 3000mm [118in.]
**39L** : DIN connector type with indicator[Note8]
**39N** : DIN connector type without indicator[Note8]

**Back pressure prevention valve**[Note4]
**Blank**: No back pressure prevention valve
**E1** : With back pressure prevention valve

**Individual air supply and exhaust apacer, stop valve**[Note3]
**Blank**: No spacer and no stop valve
**NPM** : Individual air supply spacer (with M5 female thread for F10)[Note9]
**NP6** : Individual air supply spacer (with $\phi$6 fitting for F15)[Note9]
**NP8** : Individual air supply spacer (with $\phi$8 fitting for F15)[Note9]
**NRM** : Individual exhaust spacer (with M5 female thread for F10)[Note9]
**NR6** : Individual exhaust spacer (with $\phi$6 fitting for F15)[Note9]
**NR8** : Individual exhaust spacer (with $\phi$8 fitting for F15)[Note9]
**STP** : With stop valve

**Voltage**
**DC12V**[Note5]
**DC24V**
**AC100V**[Note6,9]
**AC120V**[Note6]
**AC240V**[Note6]

Enter ○ in each designated station in tables on the next page.

# F10, F15 Series

## Monoblock Manifold F Type (Direct Piping Type)

# Specifications Confirmation Form 2/2

※For specifying the valve and block-off plate to be mounted at each station, enter ○ in each applicable box below.

Mounting valve models

| Mounting valve, block-off plate \ Station | | | 1 | 2 | 3 | 4 | 5 | 6 | 7 | 8 | 9 | 10 | 11 | 12 | 13 | 14 | 15 | 16 | 17 | 18 | 19 | 20 |
|---|---|---|---|---|---|---|---|---|---|---|---|---|---|---|---|---|---|---|---|---|---|---|
| F □ T0 | 2-position, for single solenoid only | | | | | | | | | | | | | | | | | | | | | |
| F □ T1 | 2-position, single solenoid specification | | | | | | | | | | | | | | | | | | | | | |
| F □ T2 | 2-position, double solenoid specification | | | | | | | | | | | | | | | | | | | | | |
| F □ T3 | 3-position, closed center | | | | | | | | | | | | | | | | | | | | | |
| F □ T4 | 3-position, exhaust center | | | | | | | | | | | | | | | | | | | | | |
| F □ T5 | 3-position, pressure center | | | | | | | | | | | | | | | | | | | | | |
| F □ TA | Tandem 3-port (NC and NC) | | | | | | | | | | | | | | | | | | | | | |
| F □ TB | Tandem 3-port (NO and NO) | | | | | | | | | | | | | | | | | | | | | |
| F □ TC | Tandem 3-port (NC and NO) | | | | | | | | | | | | | | | | | | | | | |
| F □ LT0 | (Low current type) 2-position, for single solenoid only | | | | | | | | | | | | | | | | | | | | | |
| F □ LT1 | (Low current type) 2-position, single solenoid specification | | | | | | | | | | | | | | | | | | | | | |
| F □ LT2 | (Low current type) 2-position, double solenoid specification | | | | | | | | | | | | | | | | | | | | | |
| F □ LT3 | (Low current type) 3-position, closed center | | | | | | | | | | | | | | | | | | | | | |
| F □ LT4 | (Low current type) 3-position, exhaust center | | | | | | | | | | | | | | | | | | | | | |
| F □ LT5 | (Low current type) 3-position, pressure center | | | | | | | | | | | | | | | | | | | | | |
| F □ LTA | (Low current type) Tandem 3-port (NC and NC) | | | | | | | | | | | | | | | | | | | | | |
| F □ LTB | (Low current type) Tandem 3-port (NO and NO) | | | | | | | | | | | | | | | | | | | | | |
| F □ LTC | (Low current type) Tandem 3-port (NC and NO) | | | | | | | | | | | | | | | | | | | | | |
| F □ BP | Block-off plate | | | | | | | | | | | | | | | | | | | | | |
| Manual override | R | Manual override lever[Note1] | | | | | | | | | | | | | | | | | | | | |
| | 83 | Protruding locking type[Note7] | | | | | | | | | | | | | | | | | | | | |
| Valve outlet type[Note2] | FJ | With dual use fitting block | | | | | | | | | | | | | | | | | | | | |
| | FJ5 | With single use fitting block | | | | | | | | | | | | | | | | | | | | |
| | FJ6 | With single use fitting block | | | | | | | | | | | | | | | | | | | | |
| | FM | With female thread block | | | | | | | | | | | | | | | | | | | | |
| | FJ5A | With single use fitting block, 3-port normally closed (NC) | | | | | | | | | | | | | | | | | | | | |
| | FJ5B | With single use fitting block, 3-port normally open (NO) | | | | | | | | | | | | | | | | | | | | |
| | FJ6A | With single use fitting block, 3-port normally closed (NC) | | | | | | | | | | | | | | | | | | | | |
| | FJ6B | With single use fitting block, 3-port normally open (NO) | | | | | | | | | | | | | | | | | | | | |
| | FMA | With female thread block, 3-port normally closed (NC) | | | | | | | | | | | | | | | | | | | | |
| | FMB | With female thread block, 3-port normally open (NO) | | | | | | | | | | | | | | | | | | | | |
| | FMH | With female thread block | | | | | | | | | | | | | | | | | | | | |
| | FMAH | With female thread block, 3-port normally closed (NC) | | | | | | | | | | | | | | | | | | | | |
| | FMBH | With female thread block, 3-port normally open (NO) | | | | | | | | | | | | | | | | | | | | |
| E1[Note4] | Back pressure prevention valve | | | | | | | | | | | | | | | | | | | | | |
| NPM | Individual air supply spacer (with M5 female thread for F10) | | | | | | | | | | | | | | | | | | | | | |
| NP6 | Individual air supply spacer (with $\phi$ 6 fitting for F15) | | | | | | | | | | | | | | | | | | | | | |
| NP8 | Individual air supply spacer (with $\phi$ 8 fitting for F15) | | | | | | | | | | | | | | | | | | | | | |
| NRM | Individual exhaust spacer (with M5 female thread for F10) | | | | | | | | | | | | | | | | | | | | | |
| NR6 | Individual exhaust spacer (with $\phi$ 6 fitting for F15) | | | | | | | | | | | | | | | | | | | | | |
| NR8 | Individual exhaust spacer (with $\phi$ 8 fitting for F15) | | | | | | | | | | | | | | | | | | | | | |
| STP | With stop valve | | | | | | | | | | | | | | | | | | | | | |

Notes:
1. To designate a manual override lever, enter ○ in the manual override boxes of the designated station in the above table. When the valve specification is **T1** or **T2**, the manual override lever is placed only on the A side. This is not available with **-39**□.
2. Select valve outlet type for each station, and enter ○ in the valve outlet type boxes of the above table. The 3-port specifications are only available in valve specifications **T0**, **T1**, and **T2**.
3. When mounting the individual air supply or exhaust spacer or stop valve, enter ○ in the spacer or stop valve boxes of the designated stations in the above table.
4. When mounting the back pressure prevention valve, enter ○ in the back pressure prevention valve boxes of the designated stations in the above table. Not available with the individual exhaust spacer.
5. Not available in low-current type.
6. Not available in low-current type and tandem 3-port valves.
7. Only for wiring specification **-39**□.
8. Only for **F15** series and not available for valve specification **T1**, **TA**, **TB**, and **TC**. In addition, the valve is used only as a double solenoid for **T2**.
9. Not available with DIN connectors (**-39**□).

| Quantity set | Delivery |
|---|---|

# F10, F15 Series

## Monoblock Manifold A Type, Wire-Saving Type (Base Piping Type)

# Specifications Confirmation Form 1/2

Order Date Month/ Day/ Year/

| | |
|---|---|
| Company name | |
| Contact person | |
| Order No. | |

• Fill in selections inside the thick-lined boxes.

**Manifold model**

**F □ M □ A/AH □ □ - □ - □**

**Valve size**
**10**: 10mm width
**15**: 15mm width

**Valve units**
**2** to □[Note]

**Manifold outlet specification**
**J** : With dual use fitting blocks
**M** : With female thread blocks
**L** : With selectable fitting blocks

**Pilot specification**
**Blank**: Internal pilot manifold
**G** : External pilot manifold

**Wiring specification**
**F100N**: Flat cable connector 10-pin
**F101N**: Flat cable connector 10-pin
**F200N**: Flat cable connector 20-pin
**F201N**: Flat cable connector 20-pin
**F260N**: Flat cable connector 26-pin

(M2.6 mounting screw)
**D250N**: D-sub connector 25-pin[Note11]
**D251N**: D-sub connector 25-pin[Note11]

(4-40UNC mounting screw)
**D250NU**: D-sub connector 25-pin[Note12]
**D251NU**: D-sub connector 25-pin[Note12]

**Wiring connection specification**
**Blank**: Packed wiring
**W** : Double wiring

Note: For the maximum number of units, check the table for maximum number of valve units by wiring specification on page 51.

**Mounting valve model**

**stn. □ F Valve size T Valve specification □ - Note 3 - A1 - PN - Note 4 - Note 8 - Note 5 □**

**Operation type**
**Blank**: Internal pilot type[Note1]
**G** : External pilot type (for positive pressure)[Note2]
**V** : External pilot type (for vacuum)[Note2]

**Manual override**
**Blank**: Manual override button
**R** : Manual override lever[Note3]

**Manifold fitting specifications**[Note4]
Can be selected only when the manifold type is **A** and the manifold outlet specification is **L** (with selectable fitting block (metric)).
**J5** : Manifold side outlet port with single use fitting block (**F10**: $\phi$4, **F15**: $\phi$6)
**J6** : Manifold side outlet port with single use fitting block (**F10**: $\phi$6, **F15**: $\phi$8)
**M** : Manifold side outlet port with female thread block (**F10**: M5X0.8, **F15**: Rc1/8)
**J5A** : Manifold side outlet port with single use fitting block, 3-port normally closed (NC) (**F10**: $\phi$4, **F15**: $\phi$6)
**J5B** : Manifold side outlet port with single use fitting block, 3-port normally open (NO) (**F10**: $\phi$4, **F15**: $\phi$6)
**J6A** : Manifold side outlet port with single use fitting block, 3-port normally closed (NC) (**F10**: $\phi$6, **F15**: $\phi$8)
**J6B** : Manifold side outlet port with single use fitting block, 3-port normally open (NO) (**F10**: $\phi$6, **F15**: $\phi$8)
**MA** : Manifold side outlet port with female thread block, 3-port mormally closed (NC) (**F10**: M5X0.8, **F15**: Rc1/8)
**MB** : Manifold side outlet port with female thread block, 3-port normally open (NO) (**F10**: M5X0.8, **F15**: Rc1/8)

Can be selected only when the manifold type is **AH** and the manifold outlet specification is **L** (with selectable fitting blocks (imperial)).
**MH** : Manifold side outlet port with female thread block (**F10**:10-32UNF, **F15**: NPT1/8)
**MAH**: Manifold side outlet port with female thread block, 3-port mormally closed (NC) (**F10**:10-32UNF, **F15**: NPT1/8)
**MBH**: Manifold side outlet port with female thread block, 3-port normally open (NO) (**F10**:10-32UNF, **F15**: NPT1/8)

**Back pressure prevention valve**[Note8]
**Blank**: No back pressure prevention valve
**E1** : With back pressure prevention valve

**Individual air supply and exhaust apacer, stop valve**[Note5]
**Blank**: No spacer and no stop valve
**NPM** : Individual air supply spacer (with M5 female thread for F10)
**NP6** : Individual air supply spacer (with $\phi$6 fitting for F15)
**NP8** : Individual air supply spacer (with $\phi$8 fitting for F15)
**NRM** : Individual exhaust spacer (with M5 female thread for F10)
**NR6** : Individual exhaust spacer (with $\phi$6 fitting for F15)
**NR8** : Individual exhaust spacer (with $\phi$8 fitting for F15)
**STP** : With stop valve[Note1]

**Voltage**
**DC12V**[Note9]
**DC24V**
**AC100V**[Note10]
**AC120V**[Note10]

Enter ○ in each designated station in tables on the next page.

# F10, F15 Series

## Monoblock Manifold A Type, Wire-Saving Type (Base Piping Type)

# Specifications Confirmation Form 2/2

※For specifying the valve and block-off plate to be mounted at each station, enter ○ in each applicable box below.

Mounting valve models

| Mounting valve, block-off plate \ Station | | 1 | 2 | 3 | 4 | 5 | 6 | 7 | 8 | 9 | 10 | 11 | 12 | 13 | 14 | 15 | 16 | 17 | 18 | 19 | 20 |
|---|---|---|---|---|---|---|---|---|---|---|---|---|---|---|---|---|---|---|---|---|---|
| F □ T0 | 2-position, for single solenoid only | | | | | | | | | | | | | | | | | | | | |
| F □ T1 | 2-position, single solenoid specification | | | | | | | | | | | | | | | | | | | | |
| F □ T2 | 2-position, double solenoid specification | | | | | | | | | | | | | | | | | | | | |
| F □ T3 | 3-position, closed center | | | | | | | | | | | | | | | | | | | | |
| F □ T4[Note6] | 3-position, exhaust center | | | | | | | | | | | | | | | | | | | | |
| F □ T5[Note6] | 3-position, pressure center | | | | | | | | | | | | | | | | | | | | |
| F □ TA[Note7] | Tandem 3-port (NC and NC) | | | | | | | | | | | | | | | | | | | | |
| F □ TB[Note7] | Tandem 3-port (NO and NO) | | | | | | | | | | | | | | | | | | | | |
| F □ TC[Note7] | Tandem 3-port (NC and NO) | | | | | | | | | | | | | | | | | | | | |
| F □ LT0 | (Low current type) 2-position, for single solenoid only | | | | | | | | | | | | | | | | | | | | |
| F □ LT1 | (Low current type) 2-position, single solenoid specification | | | | | | | | | | | | | | | | | | | | |
| F □ LT2 | (Low current type) 2-position, double solenoid specification | | | | | | | | | | | | | | | | | | | | |
| F □ LT3 | (Low current type) 3-position, closed center | | | | | | | | | | | | | | | | | | | | |
| F □ LT4[Note6] | (Low current type) 3-position, exhaust center | | | | | | | | | | | | | | | | | | | | |
| F □ LT5[Note6] | (Low current type) 3-position, pressure center | | | | | | | | | | | | | | | | | | | | |
| F □ LTA[Note7] | (Low current type) Tandem 3-port (NC and NC) | | | | | | | | | | | | | | | | | | | | |
| F □ LTB[Note7] | (Low current type) Tandem 3-port (NO and NO) | | | | | | | | | | | | | | | | | | | | |
| F □ LTC[Note7] | (Low current type) Tandem 3-port (NC and NO) | | | | | | | | | | | | | | | | | | | | |
| F □ BP | Block-off plate | | | | | | | | | | | | | | | | | | | | |
| Manual override | (-R) Manual override lever[Note3] | | | | | | | | | | | | | | | | | | | | |
| Manifold fitting specification[Note4] (Manifold side outlet port) | J5 With single use fitting block | | | | | | | | | | | | | | | | | | | | |
| | J6 With single use fitting block | | | | | | | | | | | | | | | | | | | | |
| | M With female thread block | | | | | | | | | | | | | | | | | | | | |
| | J5A With single use fitting block, 3-port normally closed (NC) | | | | | | | | | | | | | | | | | | | | |
| | J5B With single use fitting block, 3-port normally open (NO) | | | | | | | | | | | | | | | | | | | | |
| | J6A With single use fitting block, 3-port normally closed (NC) | | | | | | | | | | | | | | | | | | | | |
| | J6B With single use fitting block, 3-port normally open (NO) | | | | | | | | | | | | | | | | | | | | |
| | MA With female thread block, 3-port normally closed (NC) | | | | | | | | | | | | | | | | | | | | |
| | MB With female thread block, 3-port normally open (NO) | | | | | | | | | | | | | | | | | | | | |
| | MH With female thread block | | | | | | | | | | | | | | | | | | | | |
| | MAH With female thread block, 3-port normally closed (NC) | | | | | | | | | | | | | | | | | | | | |
| | MBH With female thread block, 3-port normally open (NO) | | | | | | | | | | | | | | | | | | | | |
| E1[Note8] | Back pressure prevention valve | | | | | | | | | | | | | | | | | | | | |
| NPM | Individual air supply spacer (with M5 female thread for F10) | | | | | | | | | | | | | | | | | | | | |
| NP6 | Individual air supply spacer (with $\phi$ 6 fitting for F15) | | | | | | | | | | | | | | | | | | | | |
| NP8 | Individual air supply spacer (with $\phi$ 8 fitting for F15) | | | | | | | | | | | | | | | | | | | | |
| NRM | Individual exhaust spacer (with M5 female thread for F10) | | | | | | | | | | | | | | | | | | | | |
| NR6 | Individual exhaust spacer (with $\phi$ 6 fitting for F15) | | | | | | | | | | | | | | | | | | | | |
| NR8 | Individual exhaust spacer (with $\phi$ 8 fitting for F15) | | | | | | | | | | | | | | | | | | | | |
| STP | With stop valve | | | | | | | | | | | | | | | | | | | | |

Notes:
1. Cannot be mounted on the external pilot manifold.
2. Cannot be mounted on the internal pilot manifold.
3. To designate a manual override lever, enter ○ in the manual override boxes of the designated station in the above table. When the valve specification is **T1** or **T2**, the manual override lever is placed only on the A side.
4. When the manifold outlet specifications are **L** (with selectable fitting), select fitting specification for each station, and enter ○ in the manifold fitting specification boxes of the above table. The 3-port specifications are only available in valve specification **T0**, **T1**, and **T2**.
5. When mounting the individual air supply or exhaust spacer or stop valve, enter ○ in the spacer or stop valve boxes of the designated stations in the above table.
6. Not available wiith vacuum valves.
7. Not availabale in external pilot type and vacuum valves.
8. When mounting the back pressure prevention valve, enter ○ in the back pressure prevention valve boxes of the designated stations in the above table. Not available with the individual exhaust spacer and vacuum valve.
9. Not available in low-current type.
10. Not available in low-current type and tandem 3-port valves. In addtion, only available when the wiring specification is a D-sub connector.
11. Can be selected only when the manifold typi is A.
12. Can be selected only when the manifold typi is AH.

| Quantity set | Delivery |
|---|---|

# F10, F15 Series

## Monoblock Manifold F Type, Wire-Saving Type (Direct Piping Type)

# Specifications Confirmation Form 1/2

Order Date Month/ Day/ Year/

| | |
|---|---|
| Company name | |
| Contact person | |
| Order No. | |

• Fill in selections inside the thick-lined boxes.

**Manifold model**

**F □ M □ F/FH - □ - □**

**Valve size**
**10**: 10mm width
**15**: 15mm width

**Valve units**
**2** to □[Note]

Note: For the maximum number of units, check the table for mximum number of valve units by wiring specification on page 51.

**Wiring specification**
**F100N** : Flat cable connector 10-pin
**F101N** : Flat cable connector 10-pin
**F200N** : Flat cable connector 20-pin
**F201N** : Flat cable connector 20-pin
**F260N** : Flat cable connector 26-pin

(M2.6 mounting screw)
**D250N** : D-sub connecor 25-pin[Note7]
**D251N** : D-sub connector 25-pin[Note7]

(4-40UNC mounting screw)
**D250NU** : D-sub connector 25-pin[Note8]
**D251NU** : D-sub connector 25-pin[Note8]

**Wiring connection specification**
**Blank**: Packed wiring
**W** : Double wiring

**Mounting valve model**

**stn. □ F** Valve size **T** Valve specification [Note 1] - [Note 2] - **PN** - [Note 4] - [Note 3] [ ]

**Manual override**
**Blank**: Manual override button
**R** : Manual override lever[Note1]

**Valve outlet type**[Note2]
Can be selected only when the manifold type is **F** (metric).
**FJ** : With dual use fitting block (**F10**: $\phi$4 and $\phi$6, **F15**: $\phi$6 and $\phi$8)
**FJ5** : With single use fitting block (**F10**: $\phi$4, **F15**: $\phi$6)
**FJ6** : With single use fitting block (**F10**: $\phi$6, **F15**: $\phi$8)
**FM** : With female thread block (**F10**: M5X0.8, **F15**: Rc1/8)
**FJ5A** : With single use fitting block, 3-port normally closed (NC) (**F10**: $\phi$4, **F15**: $\phi$6)
**FJ5B** : With single use fitting block, 3-port normally open (NO) (**F10**: $\phi$4, **F15**: $\phi$6)
**FJ6A** : With single use fitting block, 3-port normally closed (NC) (**F10**: $\phi$6, **F15**: $\phi$8)
**FJ6B** : With single use fitting block, 3-port normally open (NO) (**F10**: $\phi$6, **F15**: $\phi$8)
**FMA** : With female thread block, 3-port mormally closed (NC) (**F10**: M5X0.8, **F15**: Rc1/8)
**FMB** : With female thread block, 3-port normally open (NO) (**F10**: M5X0.8, **F15**: Rc1/8)

Can be selected only when the manifold type is **FH** (imperial).
**FMH** : With female thread block (**F10**:10-32UNF, **F15**:NPT1/8)
**FMAH** : With female thread block, 3-port mormally closed (NC) (**F10**:10-32UNF, **F15**: NPT1/8)
**FMBH** : With female thread block, 3-port normally open (NO) (**F10**:10-32UNF, **F15**: NPT1/8)

Enter ○ in each designated station in tables on the next page.

**Back pressure prevention valve**[Note4]
**Blank**: No back pressure prevention valve
**E1** : With back pressure prevention valve

**Individual air supply and exhaust apacer, stop valve**[Note3]
**Blank**: No spacer and no stop valve
**NPM** : Individual air supply spacer (with M5 female thread for F10)
**NP6** : Individual air supply spacer (with $\phi$6 fitting for F15)
**NP8** : Individual air supply spacer (with $\phi$8 fitting for F15)
**NRM** : Individual exhaust spacer (with M5 female thread for F10)
**NR6** : Individual exhaust spacer (with $\phi$6 fitting for F15)
**NR8** : Individual exhaust spacer (with $\phi$8 fitting for F15)
**STP** : With stop valve

**Voltage**
**DC12V**[Note5]
**DC24V**
**AC100V**[Note6]
**AC120V**[Note6]

# F10, F15 Series

## Monoblock Manifold F Type Wire-Saving Type (Direct Piping Type)

# Specifications Confirmation Form 2/2

※For specifying the valve and block-off plate to be mounted at each station, enter ○ in each applicable box below.

Mounting valve models

| Mounting valve, block-off plate \ Station | | 1 | 2 | 3 | 4 | 5 | 6 | 7 | 8 | 9 | 10 | 11 | 12 | 13 | 14 | 15 | 16 | 17 | 18 | 19 | 20 |
|---|---|---|---|---|---|---|---|---|---|---|---|---|---|---|---|---|---|---|---|---|---|
| **F □ T0** | 2-position, for single solenoid only | | | | | | | | | | | | | | | | | | | | |
| **F □ T1** | 2-position, single solenoid specification | | | | | | | | | | | | | | | | | | | | |
| **F □ T2** | 2-position, double solenoid specification | | | | | | | | | | | | | | | | | | | | |
| **F □ T3** | 3-position, closed center | | | | | | | | | | | | | | | | | | | | |
| **F □ T4** | 3-position, exhaust center | | | | | | | | | | | | | | | | | | | | |
| **F □ T5** | 3-position, pressure center | | | | | | | | | | | | | | | | | | | | |
| **F □ TA** | Tandem 3-port (NC and NC) | | | | | | | | | | | | | | | | | | | | |
| **F □ TB** | Tandem 3-port (NO and NO) | | | | | | | | | | | | | | | | | | | | |
| **F □ TC** | Tandem 3-port (NC and NO) | | | | | | | | | | | | | | | | | | | | |
| **F □ LT0** | (Low current type) 2-position, for single solenoid only | | | | | | | | | | | | | | | | | | | | |
| **F □ LT1** | (Low current type) 2-position, single solenoid specification | | | | | | | | | | | | | | | | | | | | |
| **F □ LT2** | (Low current type) 2-position, double solenoid specification | | | | | | | | | | | | | | | | | | | | |
| **F □ LT3** | (Low current type) 3-position, closed center | | | | | | | | | | | | | | | | | | | | |
| **F □ LT4** | (Low current type) 3-position, exhaust center | | | | | | | | | | | | | | | | | | | | |
| **F □ LT5** | (Low current type) 3-position, pressure center | | | | | | | | | | | | | | | | | | | | |
| **F □ LTA** | (Low current type) Tandem 3-port (NC and NC) | | | | | | | | | | | | | | | | | | | | |
| **F □ LTB** | (Low current type) Tandem 3-port (NO and NO) | | | | | | | | | | | | | | | | | | | | |
| **F □ LTC** | (Low current type) Tandem 3-port (NC and NO) | | | | | | | | | | | | | | | | | | | | |
| **F □ BP** | Block-off plate | | | | | | | | | | | | | | | | | | | | |
| Manual override (**-R**) Manual override lever[Note1] | | | | | | | | | | | | | | | | | | | | | |
| Valve outlet type[Note2] | **FJ** With dual use fitting block | | | | | | | | | | | | | | | | | | | | |
| | **FJ5** With single use fitting block | | | | | | | | | | | | | | | | | | | | |
| | **FJ6** With single use fitting block | | | | | | | | | | | | | | | | | | | | |
| | **FM** With female thread block | | | | | | | | | | | | | | | | | | | | |
| | **FJ5A** With single use fitting block, 3-port normally closed (NC) | | | | | | | | | | | | | | | | | | | | |
| | **FJ5B** With single use fitting block, 3-port normally open (NO) | | | | | | | | | | | | | | | | | | | | |
| | **FJ6A** With single use fitting block, 3-port normally closed (NC) | | | | | | | | | | | | | | | | | | | | |
| | **FJ6B** With single use fitting block, 3-port normally open (NO) | | | | | | | | | | | | | | | | | | | | |
| | **FMA** With female thread block, 3-port normally closed (NC) | | | | | | | | | | | | | | | | | | | | |
| | **FMB** With female thread block, 3-port normally open (NO) | | | | | | | | | | | | | | | | | | | | |
| | **FMH** With female thread block | | | | | | | | | | | | | | | | | | | | |
| | **FMAH** With female thread block, 3-port normally closed (NC) | | | | | | | | | | | | | | | | | | | | |
| | **FMBH** With female thread block, 3-port normally open (NO) | | | | | | | | | | | | | | | | | | | | |
| **E1**[Note4] Back pressure prevention valve | | | | | | | | | | | | | | | | | | | | | |
| **NPM** | Individual air supply spacer (with M5 female thread for F10) | | | | | | | | | | | | | | | | | | | | |
| **NP6** | Individual air supply spacer (with $\phi$ 6 fitting for F15) | | | | | | | | | | | | | | | | | | | | |
| **NP8** | Individual air supply spacer (with $\phi$ 8 fitting for F15) | | | | | | | | | | | | | | | | | | | | |
| **NRM** | Individual exhaust spacer (with M5 female thread for F10) | | | | | | | | | | | | | | | | | | | | |
| **NR6** | Individual exhaust spacer (with $\phi$ 6 fitting for F15) | | | | | | | | | | | | | | | | | | | | |
| **NR8** | Individual exhaust spacer (with $\phi$ 8 fitting for F15) | | | | | | | | | | | | | | | | | | | | |
| **STP** | With stop valve | | | | | | | | | | | | | | | | | | | | |

Notes:1. To designate a manual override lever, enter ○ in the manual override boxes of the designated station in the above table.
When the valve specification is **T1** or **T2**, the manual override lever is placed only on the A side.
2. Select valve outlet type for each station, and enter ○ in the valve outlet type boxes of the above table. In addtion, the 3-port specifications are only available in valve specifications **T0**, **T1**, and **T2**.
3. When mounting the individual air supply or exhaust spacer or stop valve, enter ○ in the spacer or stop valve boxes of the designated stations in the above table.
4. When mounting the back pressure prevention valve, enter ○ in the back pressure prevention valve boxes of the designated stations in the above table.
Not available with the individual exhaust spacer.
5. Not available in low-current type.
6. Not available in low-current type and tandem 3-port valves. In addtion, only available when the wiring specification is a D-sub connector.
7. Can be selected only when the manifold typi is F.
8. Can be selected only when the manifold typi is FH.

| Quantity set | Delivery |
|---|---|

# F10, F15 Series

## PC Board Manifold
## A Type (Base Piping Type)

Order Date Month/ Day/ Year/

| | |
|---|---|
| Company name | |
| Contact person | |
| Order No. | |

# Specifications Confirmation Form 1/2

• Fill in selections inside the thick-lined boxes.

**Manifold model**

**F□M□AP□□-□-□**

**Wiring connection specification**
**Blank**: Packed wiring
**S** : Single wiring
**W** : Double wiring

**Wiring specification**
**F200**
**F201**

**Pilot specification**
**Blank**: Internal pilot manifold
**G** : External pilot manifold

**Manifold outlet specification**
**J** : With dual use fitting blocks
**M** : With female thread blocks
**L** : With selectable fitting blocks (metric)

**Valve units**
**6** to **16** (only even-numbered units)
Note: There should be 6 or 8 valve units, when the wiring connection specifications are **-W** (double wiring)

**Valve size**
**10**: 10mm width
**15**: 15mm width

**Mounting valve model**

**stn. □ F** Valve size **T** Valve specification **□ - Note 3 - A1 - PP - Note 4 - Note 8 - Note 5 □**

**Operation type**
**Blank**: Internal pilot type[Note1]
**G** : External pilot type (for positive pressure)[Note2]
**V** : External pilot type (for vacuum)[Note2]

**Manual override**
**Blank**: Manual override button
**R** : Manual override lever[Note3]

**Manifold fitting specifications**[Note4]
Can be selected only when the manifold outlet specification is **L**.
**J5** : Manifold side outlet port with single use fitting block (**F10**: $\phi$4, **F15**: $\phi$6)
**J6** : Manifold side outlet port with single use fitting block (**F10**: $\phi$6, **F15**: $\phi$8)
**M** : Manifold side outlet port with female thread block (**F10**: M5X0.8, **F15**: Rc1/8)
**J5A** : Manifold side outlet port with single use fitting block, 3-port normally closed (NC) (**F10**: $\phi$4, **F15**: $\phi$6)
**J5B** : Manifold side outlet port with single use fitting block, 3-port normally open (NO) (**F10**: $\phi$4, **F15**: $\phi$6)
**J6A** : Manifold side outlet port with single use fitting block, 3-port normally closed (NC) (**F10**: $\phi$6, **F15**: $\phi$8)
**J6B** : Manifold side outlet port with single use fitting block, 3-port normally open (NO) (**F10**: $\phi$6, **F15**: $\phi$8)
**MA** : Manifold side outlet port with female thread block, 3-port mormally closed (NC) (**F10**: M5X0.8, **F15**: Rc1/8)
**MB** : Manifold side outlet port with female thread block, 3-port normally open (NO) (**F10**: M5X0.8, **F15**: Rc1/8)

**Back pressure prevention valve**[Note8]
**Blank**: No back pressure prevention valve
**E1** : With back pressure prevention valve

**Individual air supply and exhaust apacer, stop valve**[Note5]
**Blank**: No spacer and no stop valve
**NPM** : Individual air supply spacer (with M5 female thread for F10)
**NP6** : Individual air supply spacer (with $\phi$6 fitting for F15)
**NP8** : Individual air supply spacer (with $\phi$8 fitting for F15)
**NRM** : Individual exhaust spacer (with M5 female thread for F10)
**NR6** : Individual exhaust spacer (with $\phi$6 fitting for F15)
**NR8** : Individual exhaust spacer (with $\phi$8 fitting for F15)
**STP** : With stop valve

**Voltage**
**DC12V**[Note9]
**DC24V**

→ Enter ○ in each designated station in tables on the next page.

# F10, F15 Series

## PC Board Manifold A Type (Base Piping Type)

# Specifications Confirmation Form 2/2

Mounting valve models

**Wiring connection specifications are -S (for single wiring)**

※For specifying the valve and block-off plate to be mounted at each station, enter ○ in each applicable box below.

| Mounting valve, block-off plate \ Station | | 1 | 2 | 3 | 4 | 5 | 6 | 7 | 8 | 9 | 10 | 11 | 12 | 13 | 14 | 15 | 16 |
|---|---|---|---|---|---|---|---|---|---|---|---|---|---|---|---|---|---|
| F☐T0 | 2-position, for single solenoid only | | | | | | | | | | | | | | | | |
| F☐T1 | 2-position, single solenoid specification | | | | | | | | | | | | | | | | |
| F☐LT0 | (Low current type) 2-position, for single solenoid only | | | | | | | | | | | | | | | | |
| F☐LT1 | (Low current type) 2-position, single solenoid specification | | | | | | | | | | | | | | | | |
| F☐BPC | Block-off plate | | | | | | | | | | | | | | | | |
| Manual override (-R) Manual override lever[Note3] | | | | | | | | | | | | | | | | | |
| Manifold fitting specification[Note4] (Manifold side outlet port) | J5 With single use fitting block | | | | | | | | | | | | | | | | |
| | J6 With single use fitting block | | | | | | | | | | | | | | | | |
| | M With female thread block | | | | | | | | | | | | | | | | |
| | J5A With single use fitting block, 3-port normally closed (NC) | | | | | | | | | | | | | | | | |
| | J5B With single use fitting block, 3-port normally open (NO) | | | | | | | | | | | | | | | | |
| | J6A With single use fitting block, 3-port normally closed (NC) | | | | | | | | | | | | | | | | |
| | J6B With single use fitting block, 3-port normally open (NO) | | | | | | | | | | | | | | | | |
| | MA With female thread block, 3-port normally closed (NC) | | | | | | | | | | | | | | | | |
| | MB With female thread block, 3-port normally open (NO) | | | | | | | | | | | | | | | | |
| E1[Note8] | Back pressure prevention valve | | | | | | | | | | | | | | | | |
| NPM | Individual air supply spacer (with M5 female thread for F10) | | | | | | | | | | | | | | | | |
| NP6 | Individual air supply spacer (with φ 6 fitting for F15) | | | | | | | | | | | | | | | | |
| NP8 | Individual air supply spacer (with φ 8 fitting for F15) | | | | | | | | | | | | | | | | |
| NRM | Individual exhaust spacer (with M5 female thread for F10) | | | | | | | | | | | | | | | | |
| NR6 | Individual exhaust spacer (with φ 6 fitting for F15) | | | | | | | | | | | | | | | | |
| NR8 | Individual exhaust spacer (with φ 8 fitting for F15) | | | | | | | | | | | | | | | | |
| STP | With stop valve[Note1] | | | | | | | | | | | | | | | | |

**Caution**: Valve units can be selected from only the even-numbered units between 6 and 16.

**Wiring connection specifications are -W (for double wiring)**

※For specifying the valve and block-off plate to be mounted at each station, enter ○ in each applicable box below.

| Mounting valve, block-off plate \ Station | | 1 | 2 | 3 | 4 | 5 | 6 | 7 | 8 |
|---|---|---|---|---|---|---|---|---|---|
| F☐T0 | 2-position, for single solenoid only | | | | | | | | |
| F☐T1 | 2-position, single solenoid specification | | | | | | | | |
| F☐T2 | 2-position, double solenoid specification | | | | | | | | |
| F☐T3 | 3-position, closed center | | | | | | | | |
| F☐T4[Note6] | 3-position, exhaust center | | | | | | | | |
| F☐T5[Note6] | 3-position, pressure center | | | | | | | | |
| F☐TA[Note7] | Tandem 3-port (NC and NC) | | | | | | | | |
| F☐TB[Note7] | Tandem 3-port (NO and NO) | | | | | | | | |
| F☐TC[Note7] | Tandem 3-port (NC and NO) | | | | | | | | |
| F☐LT0 | (Low current type) 2-position, for single solenoid only | | | | | | | | |
| F☐LT1 | (Low current type) 2-position, single solenoid specification | | | | | | | | |
| F☐LT2 | (Low current type) 2-position, double solenoid specification | | | | | | | | |
| F☐LT3 | (Low current type) 3-position, closed center | | | | | | | | |
| F☐LT4[Note6] | (Low current type) 3-position, exhaust center | | | | | | | | |
| F☐LT5[Note6] | (Low current type) 3-position, pressure center | | | | | | | | |
| F☐LTA[Note7] | (Low current type) Tandem 3-port (NC and NC) | | | | | | | | |
| F☐LTB[Note7] | (Low current type) Tandem 3-port (NO and NO) | | | | | | | | |
| F☐LTC[Note7] | (Low current type) Tandem 3-port (NC and NO) | | | | | | | | |
| F☐BPC | Block-off plate | | | | | | | | |
| Manual override (-R) Manual override lever[Note3] | | | | | | | | | |
| Manifold fitting specification[Note4] (Manifold side outlet port) | J5 With single use fitting block | | | | | | | | |
| | J6 With single use fitting block | | | | | | | | |
| | M With female thread block | | | | | | | | |
| | J5A With single use fitting block, 3-port normally closed (NC) | | | | | | | | |
| | J5B With single use fitting block, 3-port normally open (NO) | | | | | | | | |
| | J6A With single use fitting block, 3-port normally closed (NC) | | | | | | | | |
| | J6B With single use fitting block, 3-port normally open (NO) | | | | | | | | |
| | MA With female thread block, 3-port normally closed (NC) | | | | | | | | |
| | MB With female thread block, 3-port normally open (NO) | | | | | | | | |
| E1[Note8] | Back pressure prevention valve | | | | | | | | |
| NPM | Individual air supply spacer (with M5 female thread for F10) | | | | | | | | |
| NP6 | Individual air supply spacer (with φ 6 fitting for F15) | | | | | | | | |
| NP8 | Individual air supply spacer (with φ 8 fitting for F15) | | | | | | | | |
| NRM | Individual exhaust spacer (with M5 female thread for F10) | | | | | | | | |
| NR6 | Individual exhaust spacer (with φ 6 fitting for F15) | | | | | | | | |
| NR8 | Individual exhaust spacer (with φ 8 fitting for F15) | | | | | | | | |
| STP | With stop valve[Note1] | | | | | | | | |

**Caution**: There should be either 6 and 8 valves units.

Notes:
1. Cannot be mounted on the external pilot manifold.
2. Cannot be mounted on the internal pilot manifold.
3. To designate a manual override lever, enter ○ in the manual override boxes of the designated station in the left table.
4. When the manifold outlet specifications are **L** (with selectable fitting), select fitting specification for each station, and enter ○ in the manifold fitting specification boxes of the left table.
   The 3-port specifications are only available in valve specification **T0**, **T1**, and **T2**.
5. When mounting the individual air supply or exhaust spacer or stop valve, enter ○ in the spacer or stop valve boxes of the designated stations in the left table.
6. Not available wiith vacuum valves.
7. Not availabale in external pilot type and vacuum valves.
8. When mounting the back pressure prevention valve, enter ○ in the back pressure prevention valve boxes of the designated stations in the left table. Not available with the individual exhaust spacer and vacuum valve.
9. Not available in low-current type.

| Quantity set | Delivery |
|---|---|

# F10, F15 Series

## PC Board Manifold
## F Type (Direct Piping Type)

| Order Date Month/ Day/ Year/ | |
|---|---|
| Company name | |
| Contact person | |
| Order No. | |

# Specifications Confirmation Form 1/2

• Fill in selections inside the thick-lined boxes.

**Manifold model**

**F □ M □ FP - □ - □**

**Wiring connection specification**
**S** : Single wiring
**W** : Double wiring

**Wiring specification**
**F200**
**F201**

**Valve units**
**6** to **16** (only even-numbered units)

Note: There should be 6 or 8 valve units, when the wiring connection specifications are **-W** (double wiring)

**Valve size**
**10**: 10mm width
**15**: 15mm width

**Mounting valve model**

**stn. □ F** Valve size **T** Valve specification **Note 1 - Note 2 - PP - Note 4 - Note 3 - □**

**Manual override**
**Blank**: Manual override button
**R** : Manual override lever[Note1]

**Valve outlet type**[Note2]
**FJ** : With dual use fitting block (**F10**: $\phi$4 and $\phi$6, **F15**: $\phi$6 and $\phi$8)
**FJ5** : With single use fitting block (**F10**: $\phi$4, **F15**: $\phi$6)
**FJ6** : With single use fitting block (**F10**: $\phi$6, **F15**: $\phi$8)
**FM** : With female thread block (**F10**: M5X0.8, **F15**: Rc1/8)
**FJ5A** : With single use fitting block, 3-port normally closed (NC) (**F10**: $\phi$4, **F15**: $\phi$6)
**FJ5B** : With single use fitting block, 3-port normally open (NO) (**F10**: $\phi$4, **F15**: $\phi$6)
**FJ6A** : With single use fitting block, 3-port normally closed (NC) (**F10**: $\phi$6, **F15**: $\phi$8)
**FJ6B** : With single use fitting block, 3-port normally open (NO) (**F10**: $\phi$6, **F15**: $\phi$8)
**FMA** : With female thread block, 3-port mormally closed (NC) (**F10**: M5X0.8, **F15**: Rc1/8)
**FMB** : With female thread block, 3-port normally open (NO) (**F10**: M5X0.8, **F15**: Rc1/8)

**Voltage**
**DC12V**[Note5]
**DC24V**

**Individual air supply and exhaust apacer, stop valve**[Note3]
**Blank**: No spacer and no stop valve
**NPM** : Individual air supply spacer (with M5 female thread for F10)
**NP6** : Individual air supply spacer (with $\phi$6 fitting for F15)
**NP8** : Individual air supply spacer (with $\phi$8 fitting for F15)
**NRM** : Individual exhaust spacer (with M5 female thread for F10)
**NR6** : Individual exhaust spacer (with $\phi$6 fitting for F15)
**NR8** : Individual exhaust spacer (with $\phi$8 fitting for F15)
**STP** : With stop valve

**Back pressure prevention valve**[Note4]
**Blank**: No back pressure prevention valve
**E1** : With back pressure prevention valve

→ Enter ○ in each designated station in tables on the next page.

# F10, F15 Series

## PC Board Manifold F Type (Direct Piping Type)

# Specifications Confirmation Form 2/2

Mounting valve models

**Wiring connection specifications are -S (for single wiring)**

※For specifying the valve and block-off plate to be mounted at each station, enter ○ in each applicable box below.

| Mounting valve, block-off plate \ Station | | 1 | 2 | 3 | 4 | 5 | 6 | 7 | 8 | 9 | 10 | 11 | 12 | 13 | 14 | 15 | 16 |
|---|---|---|---|---|---|---|---|---|---|---|---|---|---|---|---|---|---|
| F □ T0 | 2-position, for single solenoid only | | | | | | | | | | | | | | | | |
| F □ T1 | 2-position, single solenoid specification | | | | | | | | | | | | | | | | |
| F □ LT0 | (Low current type) 2-position, for single solenoid only | | | | | | | | | | | | | | | | |
| F □ LT1 | (Low current type) 2-position, single solenoid specification | | | | | | | | | | | | | | | | |
| F □ BPC | Block-off plate | | | | | | | | | | | | | | | | |
| Manual override (-R) Manual override lever[Note1] | | | | | | | | | | | | | | | | | |
| Valve outlet type[Note2] | FJ With dual use fitting block | | | | | | | | | | | | | | | | |
| | FJ5 With single use fitting block | | | | | | | | | | | | | | | | |
| | FJ6 With single use fitting block | | | | | | | | | | | | | | | | |
| | FM With female thread block | | | | | | | | | | | | | | | | |
| | FJ5A With single use fitting block, 3-port normally closed (NC) | | | | | | | | | | | | | | | | |
| | FJ5B With single use fitting block, 3-port normally open (NO) | | | | | | | | | | | | | | | | |
| | FJ6A With single use fitting block, 3-port normally closed (NC) | | | | | | | | | | | | | | | | |
| | FJ6B With single use fitting block, 3-port normally open (NO) | | | | | | | | | | | | | | | | |
| | FMA With female thread block, 3-port normally closed (NC) | | | | | | | | | | | | | | | | |
| | FMB With female thread block, 3-port normally open (NO) | | | | | | | | | | | | | | | | |
| E1[Note4] | Back pressure prevention valve | | | | | | | | | | | | | | | | |
| NPM | Individual air supply spacer (with M5 female thread for F10) | | | | | | | | | | | | | | | | |
| NP6 | Individual air supply spacer (with φ 6 fitting for F15) | | | | | | | | | | | | | | | | |
| NP8 | Individual air supply spacer (with φ 8 fitting for F15) | | | | | | | | | | | | | | | | |
| NRM | Individual exhaust spacer (with M5 female thread for F10) | | | | | | | | | | | | | | | | |
| NR6 | Individual exhaust spacer (with φ 6 fitting for F15) | | | | | | | | | | | | | | | | |
| NR8 | Individual exhaust spacer (with φ 8 fitting for F15) | | | | | | | | | | | | | | | | |
| STP | With stop valve | | | | | | | | | | | | | | | | |

**Caution:** Valve units can be selected from only the even-numbered units between 6 and 16.

**Wiring connection specifications are -W (for double wiring)**

※For specifying the valve and block-off plate to be mounted at each station, enter ○ in each applicable box below.

| Mounting valve, block-off plate \ Station | | 1 | 2 | 3 | 4 | 5 | 6 | 7 | 8 |
|---|---|---|---|---|---|---|---|---|---|
| F □ T0 | 2-position, for single solenoid only | | | | | | | | |
| F □ T1 | 2-position, single solenoid specification | | | | | | | | |
| F □ T2 | 2-position, double solenoid specification | | | | | | | | |
| F □ T3 | 3-position, closed center | | | | | | | | |
| F □ T4 | 3-position, exhaust center | | | | | | | | |
| F □ T5 | 3-position, pressure center | | | | | | | | |
| F □ TA | Tandem 3-port (NC and NC) | | | | | | | | |
| F □ TB | Tandem 3-port (NO and NO) | | | | | | | | |
| F □ TC | Tandem 3-port (NC and NO) | | | | | | | | |
| F □ LT0 | (Low current type) 2-position, for single solenoid only | | | | | | | | |
| F □ LT1 | (Low current type) 2-position, single solenoid specification | | | | | | | | |
| F □ LT2 | (Low current type) 2-position, double solenoid specification | | | | | | | | |
| F □ LT3 | (Low current type) 3-position, closed center | | | | | | | | |
| F □ LT4 | (Low current type) 3-position, exhaust center | | | | | | | | |
| F □ LT5 | (Low current type) 3-position, pressure center | | | | | | | | |
| F □ LTA | (Low current type) Tandem 3-port (NC and NC) | | | | | | | | |
| F □ LTB | (Low current type) Tandem 3-port (NO and NO) | | | | | | | | |
| F □ LTC | (Low current type) Tandem 3-port (NC and NO) | | | | | | | | |
| F □ BPC | Block-off plate | | | | | | | | |
| Manual override (-R) Manual override lever[Note1] | | | | | | | | | |
| Valve outlet type[Note2] | FJ With dual use fitting block | | | | | | | | |
| | FJ5 With single use fitting block | | | | | | | | |
| | J6 With single use fitting block | | | | | | | | |
| | M With female thread block | | | | | | | | |
| | J5A With single use fitting block, 3-port normally closed (NC) | | | | | | | | |
| | J5B With single use fitting block, 3-port normally open (NO) | | | | | | | | |
| | J6A With single use fitting block, 3-port normally closed (NC) | | | | | | | | |
| | J6B With single use fitting block, 3-port normally open (NO) | | | | | | | | |
| | MA With female thread block, 3-port normally closed (NC) | | | | | | | | |
| | MB With female thread block, 3-port normally open (NO) | | | | | | | | |
| E1[Note4] | Back pressure prevention valve | | | | | | | | |
| NPM | Individual air supply spacer (with M5 female thread for F10) | | | | | | | | |
| NP6 | Individual air supply spacer (with φ 6 fitting for F15) | | | | | | | | |
| NP8 | Individual air supply spacer (with φ 8 fitting for F15) | | | | | | | | |
| NRM | Individual exhaust spacer (with M5 female thread for F10) | | | | | | | | |
| NR6 | Individual exhaust spacer (with φ 6 fitting for F15) | | | | | | | | |
| NR8 | Individual exhaust spacer (with φ 8 fitting for F15) | | | | | | | | |
| STP | With stop valve | | | | | | | | |

**Caution**: There should be either 6 and 8 valves units.

Notes:1. To designate a manual override lever, enter ○ in the manual override boxes of the designated station in the left table.
2. Select fitting for each station, and enter ○ in the valve outlet type boxes of the above table. In addtion, the 3-port specifications are only available in valve specifications **T0**, **T1**, and **T2**.
3. When mounting the individual air supply or exhaust spacer or stop valve, enter ○ in the spacer or stop valve boxes of the designated stations in the left table.
4. When mounting the back pressure prevention valve, enter ○ in the back pressure prevention valve boxes of the designated stations in the left table. Not available with the individual exhaust spacer and vacuum valve.
5. Not available in low-current type.

| Quantity set | Delivery |
|---|---|

CONFIRMATION FORM

# F10, F15 Series

## Split Manifold Non-Plug-in Type

# Specifications Confirmation Form 1/2

Order Date Month/ Day/ Year/

| | |
|---|---|
| Company name | |
| Contact person | |
| Order No. | |

• Fill in selections inside the thick-lined boxes.

**Manifold model**

F □ M □ N/NH □ □ - □

**Piping block specification (air supply and exhaust)**
Can be selected only when the manifold type is **N** (metric).
- **JR** : With dual use fitting, right-side mounting
- **JL** : With dual use fitting, left-side mounting
- **JD** : With dual use fitting, both-side mounting
- **MR** : With female thread, right-side mounting
- **ML** : With female thread, left-side mounting
- **MD** : With female thread, both-side mounting
- **J5R** : With single use fitting $\phi$8, right-side mounting
- **J6R** : With single use fitting $\phi$10, right-side mounting
- **J5L** : With single use fitting $\phi$8, left-side mounting
- **J6L** : With single use fitting $\phi$10, left-side mounting
- **J5D** : With single use fitting $\phi$8, both-side mounting
- **J6D** : With single use fitting $\phi$10, both-side mounting

Can be selected only when the manifold type is **NH** (imperial).
- **MRH** : With female thread, right-side mounting
- **MLH** : With female thread, left-side mounting
- **MDH** : With female thread, both-side mounting

**Pilot specification**
- **Blank**: Internal pilot manifold
- **G** : External pilot manifold

**Manifold outlet specification**
- **J** : With dual use fitting blocks
- **M** : With female thread blocks
- **L** : With selectable fitting blocks
- **Blank**: With plates (direct piping type)

**Valve units**
**2** to **20**

**Valve size**
- **10**: 10mm width
- **15**: 15mm width

**Mounting valve model**

stn. □ F Valve size T Valve specification □ - Note 3 - A1 (Note4) - □ - Note 5 - Note 10 - Note 6 - Note 7 □

When manifold outlet specifications are **J**, **M**, or **L**.

**Operation type**
- **Blank**: Internal pilot type[Note1]
- **G** : External pilot type[Note2]

**Manual override**
- **Blank**: Manual override button
- **R** : Manual override lever[Note3]

**Manifold fitting specifications**[Note5]
Can be selected only when the manifold type is **N** and the manifold outlet specification is **L** (with selectable fitting blocks (metric))
- **J5** : Manifold side outlet port with single use fitting block[Note13] (**F10**: $\phi$4, **F15**: $\phi$6)
- **J6** : Manifold side outlet port with single use fitting block[Note13] (**F10**: $\phi$6, **F15**: $\phi$8)
- **M** : Manifold side outlet port with female thread block[Note13] (**F10**: M5X0.8, **F15**: Rc1/8)
- **J5A** : Manifold side outlet port with single use fitting block, 3-port normally closed (NC)[Note13] (**F10**: $\phi$4, **F15**: $\phi$6)
- **J5B** : Manifold side outlet port with single use fitting block, 3-port normally open (NO)[Note13] (**F10**: $\phi$4, **F15**: $\phi$6)
- **J6A** : Manifold side outlet port with single use fitting block, 3-port normally closed (NC)[Note13] (**F10**: $\phi$6, **F15**: $\phi$8)
- **J6B** : Manifold side outlet port with single use fitting block, 3-port normally open (NO)[Note13] (**F10**: $\phi$6, **F15**: $\phi$8)
- **MA** : Manifold side outlet port with female thread block, 3-port mormally closed (NC)[Note13] (**F10**: M5X0.8, **F15**: Rc1/8)
- **MB** : Manifold side outlet port with female thread block, 3-port normally open (NO)[Note13] (**F10**: M5X0.8, **F15**: Rc1/8)

Can be selected only when the manifold type is **NH** and the manifold outlet specification is **L** (with selectable fitting blocks (imperial))
- **MH** : Manifold side outlet port with female thread block[Note14] (**F10**:10-32UNF, **F15**: NPT1/8)
- **MAH** : Manifold side outlet port with female thread block, 3-port mormally closed (NC)[Note14] (**F10**:10-32UNF, **F15**: NPT1/8)
- **MBH** : Manifold side outlet port with female thread block, 3-port normally open (NO)[Note14] (**F10**:10-32UNF, **F15**: NPT1/8)

**Wiring specification**
- **PN** : S type plug connector, Without connector
- **PS** : S type plug connector, Lead wire length 300mm [11.8in.]
- **PS3** : S type plug connector, Lead wire length 3000mm [118in.]
- **CPS** : Pre-wired positive common terminal S type plug connector, Lead wire length 300mm [11.8in.]
- **CPS3** : Pre-wired positive common terminal S type plug connector, Lead wire length 3000mm [118in.]

**Voltage**
- **DC12V**[Note11]
- **DC24V**
- **AC100V**[Note12]
- **AC120V**[Note12]

**Port isolator**
- **Blank**: No port isolator
- **SP** : For 1(P) port[Note7]
- **SR** : For 3(R2), 5(R1) ports[Note7]
- **SA** : For 1(P), 3(R2), 5(R1) ports[Note7]

**Individual air supply and exhaust apacer**[Note6]
- **Blank**: No spacer
- **NPM** : Individual air supply spacer (with M5 female thread for F10)
- **NP6** : Individual air supply spacer (with $\phi$6 fitting for F15)
- **NP8** : Individual air supply spacer (with $\phi$8 fitting for F15)
- **NRM** : Individual exhaust spacer (with M5 female thread for F10)
- **NR6** : Individual exhaust spacer (with $\phi$6 fitting for F15)
- **NR8** : Individual exhaust spacer (with $\phi$8 fitting for F15)

**Back pressure prevention valve**[Note10]
- **Blank**: No back pressure prevention valve
- **E2** : With back pressure prevention valve

**Valve outlet type**
- **A1** : With plate (When manifold outlet specification are **J**, **M**, or **L**, the valve type should be **A1**.)

Can be selected only when the manifold type is **N** and the manifold outlet specification is "**Blank**" (metric).
- **FJ** : With dual use fitting block[Note4] (**F10**: $\phi$4 and $\phi$6, **F15**: $\phi$6 and $\phi$8)
- **FJ5** : With single use fitting block[Note4] (**F10**: $\phi$4, **F15**: $\phi$6)
- **FJ6** : With single use fitting block[Note4] (**F10**: $\phi$6, **F15**: $\phi$8)
- **FM** : With female thread block[Note4] (**F10**: M5X0.8, **F15**: Rc1/8)
- **FJ5A** : With single use fitting block, 3-port normally closed (NC)[Note4] (**F10**: $\phi$4, **F15**: $\phi$6)
- **FJ5B** : With single use fitting block, 3-port normally open (NO)[Note4] (**F10**: $\phi$4, **F15**: $\phi$6)
- **FJ6A** : With single use fitting block, 3-port normally closed (NC)[Note4] (**F10**: $\phi$6, **F15**: $\phi$8)
- **FJ6B** : With single use fitting block, 3-port normally open (NO)[Note4] (**F10**: $\phi$6, **F15**: $\phi$8)
- **FMA** : With female thread block, 3-port mormally closed (NC)[Note4] (**F10**: M5X0.8, **F15**: Rc1/8)
- **FMB** : With female thread block, 3-port normally open (NO)[Note4] (**F10**: M5X0.8, **F15**: Rc1/8)

Can be selected only when the manifold type is **NH** and the manifold outlet specification is "**Blank**" (imperial).
- **FMH** : With female thread block[Note4] (**F10**:10-32UNF, **F15**: NPT1/8)
- **FMAH** : With female thread block, 3-port mormally closed (NC)[Note4] (**F10**:10-32UNF, **F15**: NPT1/8)
- **FMBH** : With female thread block, 3-port normally open (NO)[Note4] (**F10**:10-32UNF, **F15**: NPT1/8)

→ Enter ○ in each designated station in tables on the next page.

# F10, F15 Series

## Split Manifold Non-Plug-in Type

# Specifications Confirmation Form 2/2

※For specifying the valve and block-off plate to be mounted at each station, enter ○ in each applicable box below.

Mounting valve models

| Mounting valve, block-off plate ＼ Station | | 1 | 2 | 3 | 4 | 5 | 6 | 7 | 8 | 9 | 10 | 11 | 12 | 13 | 14 | 15 | 16 | 17 | 18 | 19 | 20 |
|---|---|---|---|---|---|---|---|---|---|---|---|---|---|---|---|---|---|---|---|---|---|
| F □ T0 | 2-position, for single solenoid only | | | | | | | | | | | | | | | | | | | | |
| F □ T1 | 2-position, single solenoid specification | | | | | | | | | | | | | | | | | | | | |
| F □ T2 | 2-position, double solenoid specification | | | | | | | | | | | | | | | | | | | | |
| F □ T3 | 3-position, closed center | | | | | | | | | | | | | | | | | | | | |
| F □ T4 | 3-position, exhaust center | | | | | | | | | | | | | | | | | | | | |
| F □ T5 | 3-position, pressure center | | | | | | | | | | | | | | | | | | | | |
| F □ TA[Note9] | Tandem 3-port (NC and NC) | | | | | | | | | | | | | | | | | | | | |
| F □ TB[Note9] | Tandem 3-port (NO and NO) | | | | | | | | | | | | | | | | | | | | |
| F □ TC[Note9] | Tandem 3-port (NC and NO) | | | | | | | | | | | | | | | | | | | | |
| F □ LT0 | (Low current type) 2-position, for single solenoid only | | | | | | | | | | | | | | | | | | | | |
| F □ LT1 | (Low current type) 2-position, single solenoid specification | | | | | | | | | | | | | | | | | | | | |
| F □ LT2 | (Low current type) 2-position, double solenoid specification | | | | | | | | | | | | | | | | | | | | |
| F □ LT3 | (Low current type) 3-position, closed center | | | | | | | | | | | | | | | | | | | | |
| F □ LT4 | (Low current type) 3-position, exhaust center | | | | | | | | | | | | | | | | | | | | |
| F □ LT5 | (Low current type) 3-position, pressure center | | | | | | | | | | | | | | | | | | | | |
| F □ LTA[Note9] | (Low current type) Tandem 3-port (NC and NC) | | | | | | | | | | | | | | | | | | | | |
| F □ LTB[Note9] | (Low current type) Tandem 3-port (NO and NO) | | | | | | | | | | | | | | | | | | | | |
| F □ LTC[Note9] | (Low current type) Tandem 3-port (NC and NO) | | | | | | | | | | | | | | | | | | | | |
| F □ BPN | Block-off plate | | | | | | | | | | | | | | | | | | | | |
| Manual override (-R) Manual override lever[Note3] | | | | | | | | | | | | | | | | | | | | | |
| Valve outlet type[Note4] | FJ With dual use fitting block | | | | | | | | | | | | | | | | | | | | |
| | FJ5 With single use fitting block | | | | | | | | | | | | | | | | | | | | |
| | FJ6 With single use fitting block | | | | | | | | | | | | | | | | | | | | |
| | FM With female thread block | | | | | | | | | | | | | | | | | | | | |
| | FJ5A With single use fitting block, 3-port normally closed (NC) | | | | | | | | | | | | | | | | | | | | |
| | FJ5B With single use fitting block, 3-port normally open (NO) | | | | | | | | | | | | | | | | | | | | |
| | FJ6A With single use fitting block, 3-port normally closed (NC) | | | | | | | | | | | | | | | | | | | | |
| | FJ6B With single use fitting block, 3-port normally open (NO) | | | | | | | | | | | | | | | | | | | | |
| | FMA With female thread block, 3-port normally closed (NC) | | | | | | | | | | | | | | | | | | | | |
| | FMB With female thread block, 3-port normally open (NO) | | | | | | | | | | | | | | | | | | | | |
| | FMH With female thread block | | | | | | | | | | | | | | | | | | | | |
| | FMAH With female thread block, 3-port normally closed (NC) | | | | | | | | | | | | | | | | | | | | |
| | FMBH With female thread block, 3-port normally open (NO) | | | | | | | | | | | | | | | | | | | | |
| Manifold fitting specification[Note5] (Manifold side outlet port) | J5 With single use fitting block | | | | | | | | | | | | | | | | | | | | |
| | J6 With single use fitting block | | | | | | | | | | | | | | | | | | | | |
| | M With female thread block | | | | | | | | | | | | | | | | | | | | |
| | J5A With single use fitting block, 3-port normally closed (NC) | | | | | | | | | | | | | | | | | | | | |
| | J5B With single use fitting block, 3-port normally open (NO) | | | | | | | | | | | | | | | | | | | | |
| | J6A With single use fitting block, 3-port normally closed (NC) | | | | | | | | | | | | | | | | | | | | |
| | J6B With single use fitting block, 3-port normally open (NO) | | | | | | | | | | | | | | | | | | | | |
| | MA With female thread block, 3-port normally closed (NC) | | | | | | | | | | | | | | | | | | | | |
| | MB With female thread block, 3-port normally open (NO) | | | | | | | | | | | | | | | | | | | | |
| | MH With female thread block | | | | | | | | | | | | | | | | | | | | |
| | MAH With female thread block, 3-port normally closed (NC) | | | | | | | | | | | | | | | | | | | | |
| | MBH With female thread block, 3-port normally open (NO) | | | | | | | | | | | | | | | | | | | | |
| E2[Note10] | Back pressure prevention valve | | | | | | | | | | | | | | | | | | | | |
| NPM | Individual air supply spacer (with M5 female thread for F10) | | | | | | | | | | | | | | | | | | | | |
| NP6 | Individual air supply spacer (with φ 6 fitting for F15) | | | | | | | | | | | | | | | | | | | | |
| NP8 | Individual air supply spacer (with φ 8 fitting for F15) | | | | | | | | | | | | | | | | | | | | |
| NRM | Individual exhaust spacer (with M5 female thread for F10) | | | | | | | | | | | | | | | | | | | | |
| NR6 | Individual exhaust spacer (with φ 6 fitting for F15) | | | | | | | | | | | | | | | | | | | | |
| NR8 | Individual exhaust spacer (with φ 8 fitting for F15) | | | | | | | | | | | | | | | | | | | | |
| Port isolator (-SP) For 1(P) port[Note8] | | | | | | | | | | | | | | | | | | | | | |
| Port isolator (-SR) For 3(R2), 5(R1) ports[Note8] | | | | | | | | | | | | | | | | | | | | | |
| Port isolator (-SA) For 1(P), 3(R2), 5(R1) ports[Note8] | | | | | | | | | | | | | | | | | | | | | |

Notes:
1. Cannot be mounted on the external pilot manifold.
2. Cannot be mounted on the internal pilot manifold.
3. To designate a manual override lever, enter ○ in the manual override boxes of the designated stations in the above table.
4. When the manifold outlet specifications are "**Blank**", select fitting specification for each station, and enter ○ in the valve outlet type boxes of the above table. The 3-port specifications are only available in valve specifications **T0**, **T1**, and **T2**.
5. When the manifold outlet specifications are **L** (with selectable fitting), select manifold fitting specification for each station, and enter ○ in the manifold fitting specification boxes of the above table. The 3-port specifications are only available in valve specifications **T0**, **T1**, and **T2**.
6. When mounting the individual air supply or exhaust spacer, enter ○ in the spacer boxes of the desigated stations in the above table.
7. To designate a port isolator, enter ○ in one box of the designated stations in the above table.
8. Port isolators can be installed only when piping blocks are mounted on both sides. In addtion, only 1 port isolator can be mounted in 1 manifold for **-SA**, or 1 each port isolator for **-SP** and **-SR** for a total of 2 locations. When shipping, the designated port isolators are installed between the designated station and the station to its immediate left (the next smaller stn. No.).
9. Not availabale in external pilot type.
10. When mounting the back pressure prevention valve , enter ○ in the back pressure prevention valve boxes of the designated stations in the above table. Not available with the individual exhaust spacer.
11. Not available in low-current type.
12. Not available in low-current type and tandem 3-port valves.

| Quantity set | Delivery |
|---|---|

CONFIRMATION FORM

# F10, F15 Series

## Split Manifold Plug-in Type

# Specifications Confirmation Form 1/2

Order Date Month/ Day/ Year/

| | |
|---|---|
| Company name | |
| Contact person | |
| Order No. | |

• Fill in selections inside the thick-lined boxes.

**Manifold model**

**F □ M □ P/PH □ □ - □ - □ - □ - □ □**

**Valve size**
**10**: 10mm width
**15**: 15mm width

**Valve units**
**2** to □[Note]
Note: For the maximum number of units, see the table for maximum number of valve units by wiring specification, on P. 66

**Pilot specification**
**Blank**: Internal pilot manifold
**G** : External pilot manifold

**Manifold outlet specification**
**J** : With dual use fitting blocks
**M** : With female thread blocks
**L** : With selectable fitting blocks
**Blank**: With plates (direct piping type)

**Piping block specification (air supply and exhaust)**
Can be selected only when the manifold type is **P** (metric).
**JR** : With dual use fitting, right-side mounting
**JL** : With dual use fitting, left-side mounting
**JD** : With dual use fitting, both-side mounting
**MR** : With female thread, right-side mounting
**ML** : With female thread, left-side mounting
**MD** : With female thread, both-side mounting
**J5R** : With single use fitting $\phi$8, right-side mounting
**J6R** : With single use fitting $\phi$10, right-side mounting
**J5L** : With single use fitting $\phi$8, left-side mounting
**J6L** : With single use fitting $\phi$10, left-side mounting
**J5D** : With single use fitting $\phi$8, both-side mounting
**J6D** : With single use fitting $\phi$10, both-side mounting

Can be selected only when the manifold type is **PH** (imperial).
**MRH**: With female thread, right-side mounting
**MLH**: With female thread, left-side mounting
**MDH**: With female thread, both-side mounting

**Wiring connection specification**
**Blank**: Packed wiring
**W** : Double wiring

**Wiring position (wiring block)**
**Blank**: Left-side mounting
**R** : Right-side mounting

**Voltage**
**DC12V**[Note9]
**DC24V**
**AC100V**[Note10]

**Wiring specification**

<connector top surface wiring>
**F100** : Flat cable connector 10-pin
**F100N** : Flat cable connector 10-pin without power terminal
**F101** : Flat cable connector 10-pin
**F101N** : Flat cable connector 10-pin without power terminal
**F200** : Flat cable connector 20-pin
**F200N** : Flat cable connector 20-pin without power terminal
**F201** : Flat cable connector 20-pin
**F201N** : Flat cable connector 20-pin without power terminal
**F260** : Flat cable connector 26-pin
**F260N** : Flat cable connector 26-pin without power terminal

(M2.6 mounting screw)
**D250** : D-sub connector 25-pin[Note13]
**D250N** : D-sub connector 25-pin without power terminal[Note13]
**D251** : D-sub connector 25-pin[Note13]
**D251N** : D-sub connector 25-pin without power terminal[Note13]
(4-40UNC mounting screw)
**D250U** : D-sub connector 25-pin[Note14]
**D251U** : D-sub connector 25-pin[Note14]
**D370NU** : D-sub connector 37-pin without power terminal[Note14]

**T200**: Terminal block 19 terminals

<connector side surface wiring>
**F100E** : Flat cable connector 10-pin
**F100EN** : Flat cable connector 10-pin without power terminal
**F101E** : Flat cable connector 10-pin
**F101EN** : Flat cable connector 10-pin without power terminal
**F200E** : Flat cable connector 20-pin
**F200EN** : Flat cable connector 20-pin without power terminal
**F201E** : Flat cable connector 20-pin
**F201EN** : Flat cable connector 20-pin without power terminal
**F260E** : Flat cable connector 26-pin
**F260EN** : Flat cable connector 26-pin without power terminal

(M2.6 mounting screw)
**D250E** : D-sub connector 25-pin[Note13]
**D250EN** : D-sub connector 25-pin without power terminal[Note13]
**D251E** : D-sub connector 25-pin[Note13]
**D251EN** : D-sub connector 25-pin without power terminal[Note13]
(4-40UNC mounting screw)
**D250EU** : D-sub connector 25-pin[Note14]
**D251EU** : D-sub connector 25-pin[Note14]

**Mounting valve model**

**stn. □ F** Valve size **T** Valve specification **□ - Note 3 - A1 - Note 5 - Note 12 - Note 6 - Note 7 □**

When manifold outlet specifications are **J**, **M**, or **L**.

**Operation type**
**Blank**: Internal pilot type[Note1]
**G** : External pilot type[Note2]

**Manual override**
**Blank**: Manual override button
**R** : Manual override lever[Note3]

**Valve outlet type**
**A1** : With plate (When manifold outlet specification are **J**, **M**, or **L**, the valve type should be **A1**.)

Can be selected only when the manifold type is **P** and the manifold outlet specification is "**Blank**" (metric).
**FJ** : With dual use fitting block[Note4] (**F10**: $\phi$4 and $\phi$6, **F15**: $\phi$6 and $\phi$8)
**FJ5** : With single use fitting block[Note4] (**F10**: $\phi$4, **F15**: $\phi$6)
**FJ6** : With single use fitting block[Note4] (**F10**: $\phi$6, **F15**: $\phi$8)
**FM** : With female thread block[Note4] (**F10**: M5X0.8, **F15**: Rc1/8)
**FJ5A** : With single use fitting block, 3-port normally closed (NC)[Note4] (**F10**: $\phi$4, **F15**: $\phi$6)
**FJ5B** : With single use fitting block, 3-port normally open (NO)[Note4] (**F10**: $\phi$4, **F15**: $\phi$6)
**FJ6A** : With single use fitting block, 3-port normally closed (NC)[Note4] (**F10**: $\phi$6, **F15**: $\phi$8)
**FJ6B** : With single use fitting block, 3-port normally open (NO)[Note4] (**F10**: $\phi$6, **F15**: $\phi$8)
**FMA** : With female thread block, 3-port normally closed (NC)[Note4] (**F10**: M5X0.8, **F15**: Rc1/8)
**FMB** : With female thread block, 3-port normally open (NO)[Note4] (**F10**: M5X0.8, **F15**: Rc1/8)

Can be selected only when the manifold type is **PH** and the manifold outlet specification is "**Blank**" (imperial).
**FMH** : With female thread block[Note4] (**F10**: 10-32UNF, **F15**: NPT1/8)
**FMAH**: With female thread block, 3-port normally closed (NC)[Note4] (**F10**: 10-32UNF, **F15**: NPT1/8)
**FMBH**: With female thread block, 3-port normally open (NO)[Note4] (**F10**: 10-32UNF, **F15**: NPT1/8)

**Manifold fitting specifications**[Note5]
Can be selected only when the manifold type is **P** and the manifold outlet specification is **L** (with selectable fitting blocks (metric))
**J5** : Manifold side outlet port with single use fitting block (**F10**: $\phi$4, **F15**: $\phi$6)
**J6** : Manifold side outlet port with single use fitting block (**F10**: $\phi$6, **F15**: $\phi$8)
**M** : Manifold side outlet port with female thread block (**F10**: M5X0.8, **F15**: Rc1/8)
**J5A** : Manifold side outlet port with single use fitting block, 3-port normally closed (NC) (**F10**: $\phi$4, **F15**: $\phi$6)
**J5B** : Manifold side outlet port with single use fitting block, 3-port normally open (NO) (**F10**: $\phi$4, **F15**: $\phi$6)
**J6A** : Manifold side outlet port with single use fitting block, 3-port normally closed (NC) (**F10**: $\phi$6, **F15**: $\phi$8)
**J6B** : Manifold side outlet port with single use fitting block, 3-port normally open (NO) (**F10**: $\phi$6, **F15**: $\phi$8)
**MA** : Manifold side outlet port with female thread block, 3-port normally closed (NC) (**F10**: M5X0.8, **F15**: Rc1/8)
**MB** : Manifold side outlet port with female thread block, 3-port normally open (NO) (**F10**: M5X0.8, **F15**: Rc1/8)

Can be selected only when manifold type is **PH** and manifold outlet specification is **L** (with selectable fitting blocks (imperial))
**MH** : Manifold side outlet port with female thread block (**F10**: 10-32UNF, **F15**: NPT1/8)
**MAH**: Manifold side outlet port with female thread block, 3-port normally closed (NC) (**F10**: 10-32UNF, **F15**: NPT1/8)
**MBH**: Manifold side outlet port with female thread block, 3-port normally open (NO) (**F10**: 10-32UNF, **F15**: NPT1/8)

**Voltage**
**DC12V**[Note9]
**DC24V**
**AC100V**[Note10]
**AC120V**[Note10]

**Port isolator**
**Blank**: No port isolator
**SP** : For 1(P) port[Note7]
**SR** : For 3(R2), 5(R1) ports[Note7]
**SA** : For 1(P), 3(R2), 5(R1) ports[Note7]

**Individual air supply and exhaust apacer**[Note6]
**Blank**: No spacer
**PPM** : Individual air supply spacer (with M5 female thread for F10)
**PP6** : Individual air supply spacer (with $\phi$6 fitting for F15)
**PP8** : Individual air supply spacer (with $\phi$8 fitting for F15)
**PRM** : Individual exhaust spacer (with M5 female thread for F10)
**PR6** : Individual exhaust spacer (with $\phi$6 fitting for F15)
**PR8** : Individual exhaust spacer (with $\phi$8 fitting for F15)

**Back pressure prevention valve**[Note12]
**Blank**: No back pressure prevention valve
**E2** : With back pressure prevention valve

Enter ○ in each designated station in tables on the next page.

# F10, F15 Series

## Split Manifold Plug-in Type

# Specifications Confirmation Form 2/2

※For specifying the valve and block-off plate to be mounted at each station, enter ○ in each applicable box below.

| Mounting valve models | Mounting valve, block-off plate \ Station | | 1 | 2 | 3 | 4 | 5 | 6 | 7 | 8 | 9 | 10 | 11 | 12 | 13 | 14 | 15 | 16 | 17 | 18 | 19 | 20 |
|---|---|---|---|---|---|---|---|---|---|---|---|---|---|---|---|---|---|---|---|---|---|---|
| | F☐T0 | 2-position, for single solenoid only | | | | | | | | | | | | | | | | | | | | |
| | F☐T1 | 2-position, single solenoid specification | | | | | | | | | | | | | | | | | | | | |
| | F☐T2 | 2-position, double solenoid specification | | | | | | | | | | | | | | | | | | | | |
| | F☐T3 | 3-position, closed center | | | | | | | | | | | | | | | | | | | | |
| | F☐T4 | 3-position, exhaust center | | | | | | | | | | | | | | | | | | | | |
| | F☐T5 | 3-position, pressure center | | | | | | | | | | | | | | | | | | | | |
| | F☐TA[Note11] | Tandem 3-port (NC and NC) | | | | | | | | | | | | | | | | | | | | |
| | F☐TB[Note11] | Tandem 3-port (NO and NO) | | | | | | | | | | | | | | | | | | | | |
| | F☐TC[Note11] | Tandem 3-port (NC and NO) | | | | | | | | | | | | | | | | | | | | |
| | F☐LT0 | (Low current type) 2-position, for single solenoid only | | | | | | | | | | | | | | | | | | | | |
| | F☐LT1 | (Low current type) 2-position, single solenoid specification | | | | | | | | | | | | | | | | | | | | |
| | F☐LT2 | (Low current type) 2-position, double solenoid specification | | | | | | | | | | | | | | | | | | | | |
| | F☐LT3 | (Low current type) 3-position, closed center | | | | | | | | | | | | | | | | | | | | |
| | F☐LT4 | (Low current type) 3-position, exhaust center | | | | | | | | | | | | | | | | | | | | |
| | F☐LT5 | (Low current type) 3-position, pressure center | | | | | | | | | | | | | | | | | | | | |
| | F☐LTA[Note11] | (Low current type) Tandem 3-port (NC and NC) | | | | | | | | | | | | | | | | | | | | |
| | F☐LTB[Note11] | (Low current type) Tandem 3-port (NO and NO) | | | | | | | | | | | | | | | | | | | | |
| | F☐LTC[Note11] | (Low current type) Tandem 3-port (NC and NO) | | | | | | | | | | | | | | | | | | | | |
| | F☐BPP | Block-off plate | | | | | | | | | | | | | | | | | | | | |
| | Manual override (-R) Manual override lever[Note3] | | | | | | | | | | | | | | | | | | | | | |
| | Valve outlet type[Note4] | FJ With dual use fitting block | | | | | | | | | | | | | | | | | | | | |
| | | FJ5 With single use fitting block | | | | | | | | | | | | | | | | | | | | |
| | | FJ6 With single use fitting block | | | | | | | | | | | | | | | | | | | | |
| | | FM With female thread block | | | | | | | | | | | | | | | | | | | | |
| | | FJ5A With single use fitting block, 3-port normally closed (NC) | | | | | | | | | | | | | | | | | | | | |
| | | FJ5B With single use fitting block, 3-port normally open (NO) | | | | | | | | | | | | | | | | | | | | |
| | | FJ6A With single use fitting block, 3-port normally closed (NC) | | | | | | | | | | | | | | | | | | | | |
| | | FJ6B With single use fitting block, 3-port normally open (NO) | | | | | | | | | | | | | | | | | | | | |
| | | FMA With female thread block, 3-port normally closed (NC) | | | | | | | | | | | | | | | | | | | | |
| | | FMB With female thread block, 3-port normally open (NO) | | | | | | | | | | | | | | | | | | | | |
| | | FMH With female thread block | | | | | | | | | | | | | | | | | | | | |
| | | FMAH With female thread block, 3-port normally closed (NC) | | | | | | | | | | | | | | | | | | | | |
| | | FMBH With female thread block, 3-port normally open (NO) | | | | | | | | | | | | | | | | | | | | |
| | Manifold fitting specification[Note5] (Manifold side outlet port) | J5 With single use fitting block | | | | | | | | | | | | | | | | | | | | |
| | | J6 With single use fitting block | | | | | | | | | | | | | | | | | | | | |
| | | M With female thread block | | | | | | | | | | | | | | | | | | | | |
| | | J5A With single use fitting block, 3-port normally closed (NC) | | | | | | | | | | | | | | | | | | | | |
| | | J5B With single use fitting block, 3-port normally open (NO) | | | | | | | | | | | | | | | | | | | | |
| | | J6A With single use fitting block, 3-port normally closed (NC) | | | | | | | | | | | | | | | | | | | | |
| | | J6B With single use fitting block, 3-port normally open (NO) | | | | | | | | | | | | | | | | | | | | |
| | | MA With female thread block, 3-port normally closed (NC) | | | | | | | | | | | | | | | | | | | | |
| | | MB With female thread block, 3-port normally open (NO) | | | | | | | | | | | | | | | | | | | | |
| | | MH With female thread block | | | | | | | | | | | | | | | | | | | | |
| | | MAH With female thread block, 3-port normally closed (NC) | | | | | | | | | | | | | | | | | | | | |
| | | MBH With female thread block, 3-port normally open (NO) | | | | | | | | | | | | | | | | | | | | |
| | E2[Note12] | Back pressure prevention valve | | | | | | | | | | | | | | | | | | | | |
| | PPM | Individual air supply spacer (with M5 female thread for F10) | | | | | | | | | | | | | | | | | | | | |
| | PP6 | Individual air supply spacer (with φ 6 fitting for F15) | | | | | | | | | | | | | | | | | | | | |
| | PP8 | Individual air supply spacer (with φ 8 fitting for F15) | | | | | | | | | | | | | | | | | | | | |
| | PRM | Individual exhaust spacer (with M5 female thread for F10) | | | | | | | | | | | | | | | | | | | | |
| | PR6 | Individual exhaust spacer (with φ 6 fitting for F15) | | | | | | | | | | | | | | | | | | | | |
| | PR8 | Individual exhaust spacer (with φ 8 fitting for F15) | | | | | | | | | | | | | | | | | | | | |
| | Port isolator (-SP) For 1(P) port[Note8] | | | | | | | | | | | | | | | | | | | | | |
| | Port isolator (-SR) For 3(R2), 5(R1) ports[Note8] | | | | | | | | | | | | | | | | | | | | | |
| | Port isolator (-SA) For 1(P), 3(R2), 5(R1) ports[Note8] | | | | | | | | | | | | | | | | | | | | | |

Notes:
1. Cannot be mounted on the external pilot manifold.
2. Cannot be mounted on the internal pilot manifold.
3. To designate a manual override lever, enter ○ in the manual override boxes of the designated stations in the above table.
4. When the manifold outlet specifications are "**Blank**", select fitting specification for each station, and enter ○ in the valve outlet type boxes of the above table. The 3-port specifications are only available in valve specifications **T0**, **T1**, and **T2**.
5. When the manifold outlet specifications are **L** (with selectable fitting), select manifold fitting specification for each station, and enter ○ in the manifold fitting specification boxes of the above table. The 3-port specifications are only available in valve specifications **T0**, **T1**, and **T2**.
6. When mounting the individual air supply or exhaust spacer, enter ○ in the spacer boxes of the desigated stations in the above table.
7. To designate a port isolator, enter ○ in one port isolator box of the designated stations in the above table.
8. Port isolators can be installed only when piping blocks are mounted on both sides. In addtion, only 1 port isolator can be mounted in 1 manifold for **-SA**, or 1 each port isolator for **-SP** and **-SR** for a total of 2 locations. When shipping, the designated port isolators are installed between the designated station and the station to its immediate left (the next smaller stn. No.).
9. Not available in low-current type.
10. AC100V and AC120V can only be used when wiring specifications are **-D250**☐, **-D251**☐ (D-sub connector), or **-T200** (terminal). In addition, not available in low-current type and tandem 3-port valves
11. Not availabale in external pilot type.
12. When mounting the back pressure prevention valve, enter ○ in the back pressure prevention valve boxes of the designated stations in the above table. Not available with the individual exhaust spacer.
13. Can be selected only when the manifold type is **P**.
14. Can be selected only when the manifold type is **PH**.

| Quantity set | Delivery |
|---|---|

# F10, F15 Series

## Serial Transmission Compatible Manifold

# Specifications Confirmation Form 1/2

Order Date Month/ Day/ Year/

| | |
|---|---|
| Company name | |
| Contact person | |
| Order No. | |

• Fill in selections inside the thick-lined boxes.

Manifold model

**F □ M □ S/SH □ □ - □ - □ - □ - □**

**Valve size**
**10**: 10mm width
**15**: 15mm width

**Valve units**
**2** to □[Note]
Note: For the maximum number of units, see the table for maximum number of valve units by wiring specification, on P. 70.

**Manifold outlet specification**
**J** : With dual use fitting blocks
**M** : With female thread blocks
**L** : With selectable fitting blocks
**Blank**: With plates (direct piping type)

**Pilot specification**
**Blank**: Internal pilot manifold
**G** : External pilot manifold

**Piping block specification (air supply and exhaust)**
Can be selected only when the manifold type is **S** (metric).
**JR** : With dual use fitting, right-side mounting
**JL** : With dual use fitting, left-side mounting
**JD** : With dual use fitting, both-side mounting
**MR** : With female thread, right-side mounting
**ML** : With female thread, left-side mounting
**MD** : With female thread, both-side mounting
**J5R**: With single use fitting $\phi$8, right-side mounting
**J6R**: With single use fitting $\phi$10, right-side mounting
**J5L**: With single use fitting $\phi$8, left-side mounting
**J6L**: With single use fitting $\phi$10, left-side mounting
**J5D**: With single use fitting $\phi$8, both-side mounting
**J6D**: With single use fitting $\phi$10, both-side mounting

Can be selected only when the manifold type is **SH** (imperial).
**MRH**: With female thread, right-side mounting
**MLH**: With female thread, left-side mounting
**MDH**: With female thread, both-side mounting

**Wiring connection specification**
**Blank**: Packed wiring
**W** : Double wiring

**Transmission block specification**
**31** : For OMRON B7A Link Terminal (standard)
**32** : For OMRON B7A Link Terminal (high speed)
**A1**: For OMRON CompoBus/S (16 outputs)
**B1**: For CC-Link (16 outputs)
**B3**: For CC-Link (32 outputs)
**D1**: For DeviceNet (16 outputs)
**D3**: For DeviceNet (32 outputs)
**H1**: For CompoNet (16 outputs)
**K1**: For EtherCAT (16 outputs)
**K3**: For EtherCAT (32 outputs)
**M1**: For EtherNet/IP (16 outputs)
**M3**: For EtherNet/IP (32 outputs)

**Wiring position (transmission block)**
**Blank**: Left-side mounting
**R** : Right-side mounting

Mounting valve model

**stn. □ F Valve size T Valve specification □ - Note 3 - A1/Note4 - Note 5 - Note 10 - Note 6 - Note 7 DC24V**

When manifold outlet specifications are **J**, **M**, or **L**.

**Operation type**
**Blank**:Internal pilot type[Note1]
**G** : External pilot type[Note2]

**Manual override**
**Blank**: Manual override button
**R** : Manual override lever[Note3]

**Valve outlet type**
**A1** : With plate (When manifold outlet specification are **J**, **M**, or **L**, the valve type should be **A1**.)

Can be selected only when the manifold type is **S** and the manifold outlet spec. is "**Blank**" (metric).
**FJ** : With dual use fitting block ( **F10**: $\phi$4 and $\phi$6, **F15**: $\phi$6 and $\phi$8)
**FJ5** : With single use fitting block (**F10**: $\phi$4, **F15**: $\phi$6)
**FJ6** : With single use fitting block (**F10**: $\phi$6, **F15**: $\phi$8)
**FM** : With female thread block (**F10**: M5X0.8, **F15**: Rc1/8)
**FJ5A** : With single use fitting block, 3-port normally closed (NC) (**F10**: $\phi$4, **F15**: $\phi$6)
**FJ5B** : With single use fitting block, 3-port normally open (NO) (**F10**: $\phi$4, **F15**: $\phi$6)
**FJ6A** : With single use fitting block, 3-port normally closed (NC) (**F10**: $\phi$6, **F15**: $\phi$8)
**FJ6B** : With single use fitting block, 3-port normally open (NO) (**F10**: $\phi$6, **F15**: $\phi$8)
**FMA** : With female thread block, 3-port mormally closed (NC) (**F10**: M5X0.8, **F15**: Rc1/8)
**FMB** : With female thread block, 3-port normally open (NO) (**F10**: M5X0.8, **F15**: Rc1/8)

Can be selected only when the manifold type is **SH** and the manifold outlet spec. is "**Blank**" (imperial).
**FMH** : With female thread block (**F10**:10-32UNF, **F15**: NPT1/8)
**FMAH**: With female thread block, 3-port mormally closed (NC) (**F10**:10-32UNF, **F15**: NPT1/8)
**FMBH**: With female thread block, 3-port normally open (NO) (**F10**:10-32UNF, **F15**: NPT1/8)

**Manifold fitting specifications**[Note5]
Can be selected only when the manifold type is **S** and the manifold outlet specification is **L** (with selectable fitting blocks (metric))
**J5** : Manifold side outlet port with single use fitting block (**F10**: $\phi$4, **F15**: $\phi$6)
**J6** : Manifold side outlet port with single use fitting block (**F10**: $\phi$6, **F15**: $\phi$8)
**M** : Manifold side outlet port with female thread block (**F10**: M5X0.8, **F15**: Rc1/8)
**J5A** : Manifold side outlet port with single use fitting block, 3-port normally closed (NC) (**F10**: $\phi$4, **F15**: $\phi$6)
**J5B** : Manifold side outlet port with single use fitting block, 3-port normally open (NO) (**F10**: $\phi$4, **F15**: $\phi$6)
**J6A** : Manifold side outlet port with single use fitting block, 3-port normally closed (NC) (**F10**: $\phi$6, **F15**: $\phi$8)
**J6B** : Manifold side outlet port with single use fitting block, 3-port normally open (NO) (**F10**: $\phi$6, **F15**: $\phi$8)
**MA** : Manifold side outlet port with female thread block, 3-port mormally closed (NC) (**F10**: M5X0.8, **F15**: Rc1/8)
**MB** : Manifold side outlet port with female thread block, 3-port normally open (NO) (**F10**: M5X0.8, **F15**: Rc1/8)

Can be selected only when the manifold type is **SH** and the manifold outlet specification is **L** (with selectable fitting blocks (imperial))
**MH** : Manifold side outlet port with female thread block (**F10**:10-32UNF, **F15**: NPT1/8)
**MAH** : Manifold side outlet port with female thread block, 3-port mormally closed (NC) (**F10**:10-32UNF, **F15**: NPT1/8)
**MBH** : Manifold side outlet port with female thread block, 3-port normally open (NO) (**F10**:10-32UNF, **F15**: NPT1/8)

**Port isolator**
**Blank**: No port isolator
**SP** : For 1(P) port[Note7]
**SR** : For 3(R2), 5(R1) ports[Note7]
**SA** : For 1(P), 3(R2), 5(R1) ports[Note7]

**Individual air supply and exhaust apacer**[Note6]
**Blank**: No spacer
**PPM** : Individual air supply spacer (with M5 female thread for F10)
**PP6** : Individual air supply spacer (with $\phi$6 fitting for F15)
**PP8** : Individual air supply spacer (with $\phi$8 fitting for F15)
**PRM** : Individual exhaust spacer (with M5 female thread for F10)
**PR6** : Individual exhaust spacer (with $\phi$6 fitting for F15)
**PR8** : Individual exhaust spacer (with $\phi$8 fitting for F15)

**Back pressure prevention valve**[Note10]
**Blank**: No back pressure prevention valve
**E2** : With back pressure prevention valve

Enter ○ in each designated station in tables on the next page.

# F10, F15 Series

## Serial Transmission Compatible Manifold

# Specifications Confirmation Form 2/2

※For specifying the valve and block-off plate to be mounted at each station, enter ○ in each applicable box below.

Mounting valve models

| Mounting valve, block-off plate \ Station | | 1 | 2 | 3 | 4 | 5 | 6 | 7 | 8 | 9 | 10 | 11 | 12 | 13 | 14 | 15 | 16 | 17 | 18 | 19 | 20 |
|---|---|---|---|---|---|---|---|---|---|---|---|---|---|---|---|---|---|---|---|---|---|
| F □ T0 | 2-position, for single solenoid only | | | | | | | | | | | | | | | | | | | | |
| F □ T1 | 2-position, single solenoid specification | | | | | | | | | | | | | | | | | | | | |
| F □ T2 | 2-position, double solenoid specification | | | | | | | | | | | | | | | | | | | | |
| F □ T3 | 3-position, closed center | | | | | | | | | | | | | | | | | | | | |
| F □ T4 | 3-position, exhaust center | | | | | | | | | | | | | | | | | | | | |
| F □ T5 | 3-position, pressure center | | | | | | | | | | | | | | | | | | | | |
| F □ TA[Note9] | Tandem 3-port (NC and NC) | | | | | | | | | | | | | | | | | | | | |
| F □ TB[Note9] | Tandem 3-port (NO and NO) | | | | | | | | | | | | | | | | | | | | |
| F □ TC[Note9] | Tandem 3-port (NC and NO) | | | | | | | | | | | | | | | | | | | | |
| F □ LT0 | (Low current type) 2-position, for single solenoid only | | | | | | | | | | | | | | | | | | | | |
| F □ LT1 | (Low current type) 2-position, single solenoid specification | | | | | | | | | | | | | | | | | | | | |
| F □ LT2 | (Low current type) 2-position, double solenoid specification | | | | | | | | | | | | | | | | | | | | |
| F □ LT3 | (Low current type) 3-position, closed center | | | | | | | | | | | | | | | | | | | | |
| F □ LT4 | (Low current type) 3-position, exhaust center | | | | | | | | | | | | | | | | | | | | |
| F □ LT5 | (Low current type) 3-position, pressure center | | | | | | | | | | | | | | | | | | | | |
| F □ LTA | (Low current type) Tandem 3-port (NC and NC) | | | | | | | | | | | | | | | | | | | | |
| F □ LTB | (Low current type) Tandem 3-port (NO and NO) | | | | | | | | | | | | | | | | | | | | |
| F □ LTC | (Low current type) Tandem 3-port (NC and NO) | | | | | | | | | | | | | | | | | | | | |
| F □ BPP | Block-off plate | | | | | | | | | | | | | | | | | | | | |
| Manual override (-R) Manual override lever[Note3] | | | | | | | | | | | | | | | | | | | | | |
| Valve outlet type[Note4] | FJ With dual use fitting block | | | | | | | | | | | | | | | | | | | | |
| | FJ5 With single use fitting block | | | | | | | | | | | | | | | | | | | | |
| | FJ6 With single use fitting block | | | | | | | | | | | | | | | | | | | | |
| | FM With female thread block | | | | | | | | | | | | | | | | | | | | |
| | FJ5A With single use fitting block, 3-port normally closed (NC) | | | | | | | | | | | | | | | | | | | | |
| | FJ5B With single use fitting block, 3-port normally open (NO) | | | | | | | | | | | | | | | | | | | | |
| | FJ6A With single use fitting block, 3-port normally closed (NC) | | | | | | | | | | | | | | | | | | | | |
| | FJ6B With single use fitting block, 3-port normally open (NO) | | | | | | | | | | | | | | | | | | | | |
| | FMA With female thread block, 3-port normally closed (NC) | | | | | | | | | | | | | | | | | | | | |
| | FMB With female thread block, 3-port normally open (NO) | | | | | | | | | | | | | | | | | | | | |
| | FMH With female thread block | | | | | | | | | | | | | | | | | | | | |
| | FMAH With female thread block, 3-port normally closed (NC) | | | | | | | | | | | | | | | | | | | | |
| | FMBH With female thread block, 3-port normally open (NO) | | | | | | | | | | | | | | | | | | | | |
| Manifold fitting specification[Note5] (Manifold side outlet port) | J5 With single use fitting block | | | | | | | | | | | | | | | | | | | | |
| | J6 With single use fitting block | | | | | | | | | | | | | | | | | | | | |
| | M With female thread block | | | | | | | | | | | | | | | | | | | | |
| | J5A With single use fitting block, 3-port normally closed (NC) | | | | | | | | | | | | | | | | | | | | |
| | J5B With single use fitting block, 3-port normally open (NO) | | | | | | | | | | | | | | | | | | | | |
| | J6A With single use fitting block, 3-port normally closed (NC) | | | | | | | | | | | | | | | | | | | | |
| | J6B With single use fitting block, 3-port normally open (NO) | | | | | | | | | | | | | | | | | | | | |
| | MA With female thread block, 3-port normally closed (NC) | | | | | | | | | | | | | | | | | | | | |
| | MB With female thread block, 3-port normally open (NO) | | | | | | | | | | | | | | | | | | | | |
| | MH With female thread block | | | | | | | | | | | | | | | | | | | | |
| | MAH With female thread block, 3-port normally closed (NC) | | | | | | | | | | | | | | | | | | | | |
| | MBH With female thread block, 3-port normally open (NO) | | | | | | | | | | | | | | | | | | | | |
| E2[Note10] | Back pressure prevention valve | | | | | | | | | | | | | | | | | | | | |
| PPM | Individual air supply spacer (with M5 female thread for F10) | | | | | | | | | | | | | | | | | | | | |
| PP6 | Individual air supply spacer (with φ 6 fitting for F15) | | | | | | | | | | | | | | | | | | | | |
| PP8 | Individual air supply spacer (with φ 8 fitting for F15) | | | | | | | | | | | | | | | | | | | | |
| PRM | Individual exhaust spacer (with M5 female thread for F10) | | | | | | | | | | | | | | | | | | | | |
| PR6 | Individual exhaust spacer (with φ 6 fitting for F15) | | | | | | | | | | | | | | | | | | | | |
| PR8 | Individual exhaust spacer (with φ 8 fitting for F15) | | | | | | | | | | | | | | | | | | | | |
| Port isolator (-SP) For 1(P) port[Note8] | | | | | | | | | | | | | | | | | | | | | |
| Port isolator (-SR) For 3(R2), 5(R1) ports[Note8] | | | | | | | | | | | | | | | | | | | | | |
| Port isolator (-SA) For 1(P), 3(R2), 5(R1) ports[Note8] | | | | | | | | | | | | | | | | | | | | | |

Notes:
1. Cannot be mounted on the external pilot manifold.
2. Cannot be mounted on the internal pilot manifold.
3. To designate a manual override lever, enter ○ in the manual override boxes of the designated stations in the above table.
4. When the manifold outlet specifications are "**Blank**", select fitting specification for each station, and enter ○ in the valve outlet type boxes of the above table. The 3-port specifications are only available in valve specifications **T0**, **T1**, and **T2**.
5. When the manifold outlet specifications are **L** (with selectable fitting), select manifold fitting specification for each station, and enter ○ in the manifold fitting specification boxes of the above table. The 3-port specifications are only available in valve specifications **T0**, **T1**, and **T2**.
6. When mounting the individual air supply or exhaust spacer, enter ○ in the spacer boxes of the desigated stations in the above table.
7. To designate a port isolator, enter ○ in one port isolator box of the designated stations in the above table.
8. Port isolators can be installed only when piping blocks are installed on both sides. In addtion, only 1 port isolator can be mounted in 1 manifold for **-SA**, or 1 each port isolator for **-SP** and **-SR** for a total of 2 locations. When shipping, the designated port isolators are installed between the designated station and the station to its immediate left (the next smaller stn. No.).
9. Not availabale in external pilot type.
10. When mounting the back pressure prevention valve , enter ○ in the back pressure prevention valve boxes of the designated stations in the above table. Not available with the individual exhaust spacer.

| Quantity set | Delivery |
|---|---|

# F18 Series

## Monoblock Manifold
## A Type (Base Piping Type)

# Specifications Confirmation Form

Order Date Month/ Day/ Year/

| | |
|---|---|
| Company name | |
| Contact person | |
| Order No. | |

• Fill in selections inside the thick-lined boxes.

Manifold model

**F18M** □ **A** / **AH** □ □

**Valve units**
**2** to **20**

**Manifold outlet specification**
**J** : With dual use fitting blocks
**M** : With female thread blocks
**L** : With selectable fitting blocks

**Pilot specification**
**Blank**: Internal pilot manifold
**G** : External pilot manifold

Mounting valve model

**stn.** □ **F18T** Valve specification □ - Note 3 - **A1** - □ - Note 4 - Note 5 □

**Operation type**
**Blank**: Internal pilot type[Note1]
**G** : External pilot type (for positive pressure)[Note2]
**V** : External pilot type (for vacuum)[Note2]

**Manual override**
**Blank**: Manual override button
**R** : Manual override lever[Note3]
**83** : Protruding locking type[Note7]

**Voltage**
**DC12V**
**DC24V**
**AC100V**[Note9]
**AC120V**
**AC240V**[Note7]

**Wiring specification**
**Blank**: L type plug connector, Without connector
**PN** : S type plug connector, Without connector
**PS** : S type plug connector, Lead wire length 300mm [11.8in.]
**PL** : L type plug connector, Lead wire length 300mm [11.8in.]
**PS3** : S type plug connector, Lead wire length 3000mm [118in.]
**PL3** : L type plug connector, Lead wire length 3000mm [118in.]
**CPS** : Pre-wired positive common terminal S type plug connector, Lead wire length 300mm [11.8in.]
**CPL** : Pre-wired positive common terminal L type plug connector, Lead wire length 300mm [11.8in.]
**CPS3**: Pre-wired positive common terminal S type plug connector, Lead wire length 3000mm [118in.]
**CPL3**: Pre-wired positive common terminal L type plug connector, Lead wire length 3000mm [118in.]
**39L** : DIN connector type with indicator[Note8]
**39N** : DIN connector type without indicator[Note8]

**Individual air supply and exhaust apacer**[Note5]
**Blank**: Without spacer
**NP8** : Individual air supply spacer (with $\phi$8 fitting)
**NP0** : Individual air supply spacer (with $\phi$10 fitting)
**NR8** : Individual exhaust spacer (with $\phi$8 fitting)
**NR0** : Individual exhaust spacer (with $\phi$10 fitting)

**Manifold fitting specifications**[Note4]
Can be selected only when the manifold type is **A** and the manifold outlet specification is **L** (with selectable fitting blocks (metric))
**J5**: Manifold side outlet port with single use $\phi$8 fitting block
**J6**: Manifold side outlet port with single use $\phi$10 fitting block

Can be selected only when the manifold type is **AH** and the manifold outlet specification is **L** (with selectable fitting blocks (imperial))
**MH**: Manifold side outlet port with NPT1/4 female thread block

※For specifying the valve and block-off plate to be mounted at each station, enter ○ in each applicable box below.

| Mounting valve, block-off plate \ Station | | 1 | 2 | 3 | 4 | 5 | 6 | 7 | 8 | 9 | 10 | 11 | 12 | 13 | 14 | 15 | 16 | 17 | 18 | 19 | 20 |
|---|---|---|---|---|---|---|---|---|---|---|---|---|---|---|---|---|---|---|---|---|---|
| **F18T0** | 2-position, for single solenoid only | | | | | | | | | | | | | | | | | | | | |
| **F18T1** | 2-position, single solenoid specification | | | | | | | | | | | | | | | | | | | | |
| **F18T2** | 2-position, double solenoid specification | | | | | | | | | | | | | | | | | | | | |
| **F18T3** | 3-position, closed center | | | | | | | | | | | | | | | | | | | | |
| **F18T4**[Note6] | 3-position, exhaust center | | | | | | | | | | | | | | | | | | | | |
| **F18T5**[Note6] | 3-position, pressure center | | | | | | | | | | | | | | | | | | | | |
| **F18BP** | Block-off plate | | | | | | | | | | | | | | | | | | | | |
| Manual override | **R** Manual override lever[Note3] | | | | | | | | | | | | | | | | | | | | |
| | **83** Protruding locking type[Note7] | | | | | | | | | | | | | | | | | | | | |
| Manifold fitting specification[Note4] (Manifold side outlet port) | **J5** With single use fitting block | | | | | | | | | | | | | | | | | | | | |
| | **J6** With single use fitting block | | | | | | | | | | | | | | | | | | | | |
| | **MH** With female thread block | | | | | | | | | | | | | | | | | | | | |
| **NP8** | Individual air supply spacer (with $\phi$ 8 fitting) | | | | | | | | | | | | | | | | | | | | |
| **NP0** | Individual air supply spacer (with $\phi$ 10 fitting) | | | | | | | | | | | | | | | | | | | | |
| **NR8** | Individual exhaust spacer (with $\phi$ 8 fitting) | | | | | | | | | | | | | | | | | | | | |
| **NR0** | Individual exhaust spacer (with $\phi$ 10 fitting) | | | | | | | | | | | | | | | | | | | | |

Notes:1. Cannot be mounted on the external pilot manifold.
2. Cannot be mounted on the internal pilot manifold.
3. To designate a manual override lever, enter ○ in the manual override boxes of the designated station in the above table.
4. When the manifold outlet specifications are **L** (with selectable fitting), select fitting specification for each station, and enter ○ in the manifold fitting specification boxes of the above table.
5. When mounting the individual air supply or exhaust spacer, enter ○ in the spacer boxes of the designated stations in the above table.
6. Not available wiith vacuum valves.
7. Only for wiring specification **-39**□.
8. Not available for valve specification **T1**. In addition, the valve is used only as a double solenoid for **T2**.
9. Not available with DIN connectors (**-39**□).

| | |
|---|---|
| Quantity set | Delivery |

# F18 Series

## Monoblock Manifold
## F Type (Direct Piping Type)

Order Date Month/ Day/ Year/

| | |
|---|---|
| Company name | |
| Contact person | |
| Order No. | |

# Specifications Confirmation Form

• Fill in selections inside the thick-lined boxes.

Manifold model

**F18M□** F / FH

**Valve units**
**2** to **20**

Mounting valve model

**stn. □ F18T** Valve specification - Note 1 - Note 2 - □ - Note 3 □

**Manual override**
**Blank**: Manual override button
**R** : Manual override lever[Note1]
**83** : Protruding locking type[Note4]

**Valve outlet type**[Note2]
Can be selected only when the manifold type is **F** (metric).
**FJ** : With dual use φ8 and φ10 fitting block
**FJ5** : With single use φ8 fitting block
**FJ6** : With single use φ10 fitting block
**FM** : With Rc1/4 female thread block

Can be selected only when the manifold type is **FH** (imperial).
**FMH**: With NPT1/4 female thread block

**Wiring specification**
**Blank**: L type plug connector, Without connector
**PN** : S type plug connector, Without connector
**PS** : S type plug connector, Lead wire length 300mm [11.8in.]
**PL** : L type plug connector, Lead wire length 300mm [11.8in.]
**PS3** : S type plug connector, Lead wire length 3000mm [118in.]
**PL3** : L type plug connector, Lead wire length 3000mm [118in.]
**CPS** : Pre-wired positive common terminal S type plug connector, Lead wire length 300mm [11.8in.]
**CPL** : Pre-wired positive common terminal L type plug connector, Lead wire length 300mm [11.8in.]
**CPS3**: Pre-wired positive common terminal S type plug connector, Lead wire length 3000mm [118in.]
**CPL3**: Pre-wired positive common terminal L type plug connector, Lead wire length 3000mm [118in.]
**39L** : DIN connector type with indicator[Note5]
**39N** : DIN connector type without indicator[Note5]

**Individual air supply and exhaust apacer**[Note3]
**Blank**: No spacer
**NP8** : Individual air supply spacer (with φ8 fitting)
**NP0** : Individual air supply spacer (with φ10 fitting)
**NR8** : Individual exhaust spacer (with φ8 fitting)
**NR0** : Individual exhaust spacer (with φ10 fitting)

**Voltage**
**DC12V**
**DC24V**
**AC100V**[Note6]
**AC120V**
**AC240V**[Note4]

※For specifying the valve and block-off plate to be mounted at each station, enter ○ in each applicable box below.

| Mounting valve, block-off plate \ Station | | 1 | 2 | 3 | 4 | 5 | 6 | 7 | 8 | 9 | 10 | 11 | 12 | 13 | 14 | 15 | 16 | 17 | 18 | 19 | 20 |
|---|---|---|---|---|---|---|---|---|---|---|---|---|---|---|---|---|---|---|---|---|---|
| **F18T0** | 2-position, for single solenoid only | | | | | | | | | | | | | | | | | | | | |
| **F18T1** | 2-position, single solenoid specification | | | | | | | | | | | | | | | | | | | | |
| **F18T2** | 2-position, double solenoid specification | | | | | | | | | | | | | | | | | | | | |
| **F18T3** | 3-position, closed center | | | | | | | | | | | | | | | | | | | | |
| **F18T4** | 3-position, exhaust center | | | | | | | | | | | | | | | | | | | | |
| **F18T5** | 3-position, pressure center | | | | | | | | | | | | | | | | | | | | |
| **F18BP** | Block-off plate | | | | | | | | | | | | | | | | | | | | |
| Manual override | **R** Manual override lever[Note1] | | | | | | | | | | | | | | | | | | | | |
| | **83** Protruding locking type[Note4] | | | | | | | | | | | | | | | | | | | | |
| Valve outlet type[Note2] | **FJ** With dual use fitting block | | | | | | | | | | | | | | | | | | | | |
| | **FJ5** With single use fitting block | | | | | | | | | | | | | | | | | | | | |
| | **FJ6** With single use fitting block | | | | | | | | | | | | | | | | | | | | |
| | **FM** With female thread block | | | | | | | | | | | | | | | | | | | | |
| | **FMH** With female thread block | | | | | | | | | | | | | | | | | | | | |
| **NP8** | Individual air supply spacer (with φ 8 fitting) | | | | | | | | | | | | | | | | | | | | |
| **NP0** | Individual air supply spacer (with φ 10 fitting) | | | | | | | | | | | | | | | | | | | | |
| **NR8** | Individual exhaust spacer (with φ 8 fitting) | | | | | | | | | | | | | | | | | | | | |
| **NR0** | Individual exhaust spacer (with φ 10 fitting) | | | | | | | | | | | | | | | | | | | | |

Notes:1. To designate a manual override lever, enter ○ in the manual override boxes of the designated station in the above table.
2. Select valve outlet type for each station, and enter ○ in the valve outlet type boxes of the above table.
3. When mounting the individual air supply or exhaust spacer, enter ○ in the spacer boxes of the designated stations in the above table.
4. Only for wiring specification **-39□**.
5. Not available for valve specification **T1**. In addition, the valve is used only as a double solenoid for **T2**.
6. Not available with DIN connectors (**-39□**).

| | |
|---|---|
| Quantity set | Delivery |

# F18 Series

## Split Manifold Non-Plug-in Type

# Specifications Confirmation Form 1/2

| Order Date Month/ Day/ Year/ | |
|---|---|
| Company name | |
| Contact person | |
| Order No. | |

• Fill in selections inside the thick-lined boxes.

**Manifold model**

**F18M □ N/NH □ □ - □**

**Valve units**
**2** to **20**

**Manifold outlet specification**
**J** : With dual use fitting blocks
**M** : With female thread blocks
**L** : With selectable fitting blocks
**Blank**: With plates (direct piping type)

**Pilot specification**
**Blank**: Internal pilot manifold
**G** : External pilot manifold

**Piping block specification (air supply and exhaust)**
Can be selected only when the manifold type is **N** (metric).
**JR** : With dual use fitting, right-side mounting
**JL** : With dual use fitting, left-side mounting
**JD** : With dual use fitting, both-side mounting
**MR** : With female thread, right-side mounting
**ML** : With female thread, left-side mounting
**MD** : With female thread, both-side mounting

Can be selected only when the manifold type is **NH** (imperial).
**MRH**: With female thread, right-side mounting
**MLH**: With female thread, left-side mounting
**MDH**: With female thread, both-side mounting

**Mounting valve model**

**stn. □ F18T** Valve specification **□ - Note 3 - A1 (Note4) - □ - Note 5 - Note 6 - Note 7 □**

When manifold outlet specifications are **J**, **M**, or **L**.

**Operation type**
**Blank**: Internal pilot type[Note1]
**G** : External pilot type[Note2]

**Manual override**
**Blank**: Manual override button
**R** : Manual override lever[Note3]

**Voltage**
**DC12V**
**DC24V**
**AC100V**
**AC120V**

**Port isolator**
**Blank**: No port isolator
**SP** : For 1(P) port[Note7]
**SR** : For 3(R2), 5(R1) ports[Note7]
**SA** : For 1(P), 3(R2), 5(R1) ports[Note7]

**Manifold fitting specifications**[Note5]
Can be selected only when the manifold type is **N** and the manifold outlet specification is **L** (with selectable fitting blocks (metric))
**J5** : Manifold side outlet port with single use $\phi$8 fitting block[Note9]
**J6** : Manifold side outlet port with single use $\phi$10 fitting block[Note9]

Can be selected only when the manifold type is **NH** and the manifold outlet specification is **L** (with selectable fitting blocks (imperial))
**MH** : with NPT1/4 female thread block[Note10]

**Individual air supply and exhaust apacer**[Note6]
**Blank**: No spacer
**NP8** : Individual air supply spacer (with $\phi$8 fitting)
**NP0** : Individual air supply spacer (with $\phi$10 fitting)
**NR8** : Individual exhaust spacer (with $\phi$8 fitting)
**NR0** : Individual exhaust spacer (with $\phi$10 fitting)

**Wiring specification**
**PN** : S type plug connector, Without connector
**PS** : S type plug connector, Lead wire length 300mm [11.8in.]
**PS3** : S type plug connector, Lead wire length 3000mm [118in.]
**CPS** : Pre-wired positive common terminal S type plug connector, Lead wire length 300mm [11.8in.]
**CPS3** : Pre-wired positive common terminal S type plug connector, Lead wire length 3000mm [118in.]

**Valve outlet type**
**A1** : With plate (When manifold outlet specification are **J**, **M**, or **L**, the valve type should be **A1**.)

Can be selected only when the manifold type is **N** and the manifold outlet specification is "**Blank**" (metric).
**FJ** : With dual use $\phi$8 and $\phi$10 fitting block[Note4]
**FJ5** : With single use $\phi$8 fitting block[Note4]
**FJ6** : With single use $\phi$10 fitting block[Note4]
**FM** : With Rc1/4 female thread block[Note4]

Can be selected only when the manifold type is **NH** and the manifold outlet specification is "**Blank**" (imperial).
**FMH** : With NPT1/4 female thread block

Enter ○ in each designated station in tables on the next page.

# F18 Series

## Split Manifold Non-Plug-in Type

# Specifications Confirmation Form 2/2

※For specifying the valve and block-off plate to be mounted at each station, enter ○ in each applicable box below.

| Mounting valve models | Mounting valve, block-off plate \ Station | | 1 | 2 | 3 | 4 | 5 | 6 | 7 | 8 | 9 | 10 | 11 | 12 | 13 | 14 | 15 | 16 | 17 | 18 | 19 | 20 |
|---|---|---|---|---|---|---|---|---|---|---|---|---|---|---|---|---|---|---|---|---|---|---|
| | **F18T0** | 2-position, for single solenoid only | | | | | | | | | | | | | | | | | | | | |
| | **F18T1** | 2-position, single solenoid specification | | | | | | | | | | | | | | | | | | | | |
| | **F18T2** | 2-position, double solenoid specification | | | | | | | | | | | | | | | | | | | | |
| | **F18T3** | 3-position, closed center | | | | | | | | | | | | | | | | | | | | |
| | **F18T4** | 3-position, exhaust center | | | | | | | | | | | | | | | | | | | | |
| | **F18T5** | 3-position, pressure center | | | | | | | | | | | | | | | | | | | | |
| | **F18BPN** | Block-off plate | | | | | | | | | | | | | | | | | | | | |
| | Manual override (**-R**) Manual override lever[Note3] | | | | | | | | | | | | | | | | | | | | | |
| | Valve outlet type[Note4] | **FJ** With dual use fitting block | | | | | | | | | | | | | | | | | | | | |
| | | **FJ5** With single use fitting block | | | | | | | | | | | | | | | | | | | | |
| | | **FJ6** With single use fitting block | | | | | | | | | | | | | | | | | | | | |
| | | **FM** With female thread block | | | | | | | | | | | | | | | | | | | | |
| | | **FMH** With female thread block | | | | | | | | | | | | | | | | | | | | |
| | Manifold fitting specification[Note5] (Manifold side outlet port) | **J5** With single use fitting block | | | | | | | | | | | | | | | | | | | | |
| | | **J6** With single use fitting block | | | | | | | | | | | | | | | | | | | | |
| | | **MH** With female thread block | | | | | | | | | | | | | | | | | | | | |
| | **NP8** | Individual air supply spacer (with $\phi$ 8 fitting) | | | | | | | | | | | | | | | | | | | | |
| | **NP0** | Individual air supply spacer (with $\phi$ 10 fitting) | | | | | | | | | | | | | | | | | | | | |
| | **NR8** | Individual exhaust spacer (with $\phi$ 8 fitting) | | | | | | | | | | | | | | | | | | | | |
| | **NR0** | Individual exhaust spacer (with $\phi$ 10 fitting) | | | | | | | | | | | | | | | | | | | | |
| | Port isolator (**-SP**) For 1(P) port[Note8] | | | | | | | | | | | | | | | | | | | | | |
| | Port isolator (**-SR**) For 3(R2), 5(R1) ports[Note8] | | | | | | | | | | | | | | | | | | | | | |
| | Port isolator (**-SA**) For 1(P), 3(R2), 5(R1) ports[Note8] | | | | | | | | | | | | | | | | | | | | | |

Notes:1. Cannot be mounted on the external pilot manifold.
2. Cannot be mounted on the internal pilot manifold.
3. To designate a manual override lever, enter ○ in the manual override boxes of the designated stations in the above table.
4. When the manifold outlet specifications are "**Blank**", select fitting specification for each station, and enter ○ in the valve outlet type boxes of the above table.
5. When the manifold outlet specifications are **L** (with selectable fitting), select manifold fitting specification for each station, and enter ○ in the manifold fitting specification boxes of the above table.
6. When mounting the individual air supply or exhaust spacer, enter ○ in the one spacer box of the desigated stations in the above table.
7. To designate a port isolator box of the designated station, enter ○ in the port isolator box in the above table.
8. Port isolators can be installed only when piping blocks are mounted on both sides. In addtion, only 1 port isolator can be mounted in 1 manifold for **-SA**, or 1 each port isolator dor **-SP** and **-SR** for a total of 2 locations.
When shipping, the designated port isolators are mounted between the designated station and the station to its immediate left (the next smaller stn. No.).

| Quantity set | Delivery |
|---|---|

# F18 Series

## Split Manifold Plug-in Type

# Specifications Confirmation Form 1/2

| Order Date Month/ Day/ Year/ | |
|---|---|
| Company name | |
| Contact person | |
| Order No. | |

• Fill in selections inside the thick-lined boxes.

**Manifold model**

**F18M** [ ] P/PH [ ][ ] - [ ] - [ ] - [ ] - [ ] [ ]

**Valve units**
**2** to [ ]Note

Note: For the maximum number of units, check the table for mximum number of valve units by wiring specification on page 84.

**Pilot specification**
**Blank**: Internal pilot manifold
**G** : External pilot manifold

**Manifold outlet specification**
**J** : With dual use fitting blocks
**M** : With female thread blocks
**L** : With selectable fitting blocks
**Blank**: With plates (direct piping type)

**Piping block specification (air supply and exhaust)**
Can be selected only when the manifold type is **P** (metric).
**JR** : With dual use fitting, right-side mounting
**JL** : With dual use fitting, left-side mounting
**JD** : With dual use fitting, both-side mounting
**MR** : With female thread, right-side mounting
**ML** : With female thread, left-side mounting
**MD** : With female thread, both-side mounting

Can be selected only when the manifold type is **PH** (imperial).
**MRH** : With female thread, right-side mounting
**MLH** : With female thread, left-side mounting
**MDH** : With female thread, both-side mounting

**Wiring specification**
**F100** : Flat cable connector 10-pin
**F101** : Flat cable connector 10-pin
**F200** : Flat cable connector 20-pin
**F201** : Flat cable connector 20-pin
**F260** : Flat cable connector 26-pin

(M2.6 mounting screws)
**D250** : D-sub connector 25-pin Note10
**D251** : D-sub connector 25-pin Note10
(4-40UNC mounting screws)
**D250U** : D-sub connector 25-pin Note11
**D251U** : D-sub connector 25-pin Note11
**D370NU** : D-sub connector 37-pin without power terminal Note11

**T200**: Terminal block (19 terminals, M3 screws)

**Wiring connection specification**
**Blank**: Packed wiring
**W** : Double wiring

**Wiring position (wiring block)**
**Blank**: Left-side mounting
**R** : Right-side mounting

**Voltage**
**DC12V**
**DC24V**
**AC100V** Note9
**AC120V** Note9

**Mounting valve model**

**stn.** [ ] **F18T** Valve specification [ ] - [Note 3] - [A1 / Note4] - [Note 5] - [Note 6] - [Note 7] [ ]

When manifold outlet specifications are **J**, **M**, or **L**.

**Operation type**
**Blank**: Internal pilot type Note1
**G** : External pilot type Note2

**Manual override**
**Blank**: Manual override button
**R** : Manual override lever Note3

**Valve outlet type**
**A1** : With plate (When the manifold outlet specification are **J**, **M**, or **L**, the valve type should be **A1**.)

Can be selected only when the manifold type is **P** and manifold outlet specification is "**Blank**" (metric).
**FJ** : With dual use $\phi$8 and $\phi$10 fitting block Note4
**FJ5** : With single use $\phi$8 fitting block Note4
**FJ6** : With single use $\phi$10 fitting block Note4
**FM** : With Rc1/4 female thread block Note4

Can be selected only when the manifold type is **PH** and manifold outlet specification is "**Blank**" (imperial).
**FMH** : With NPT1/4 female thread block

**Manifold fitting specifications** Note5
Can be selected only when manifold type is **P** and manifold outlet specification is **L** (with selectable fitting blocks (metric))
**J5** : Manifold side outlet port with single use $\phi$8 fitting block
**J6** : Manifold side outlet port with single use $\phi$10 fitting block

Can be selected only when manifold type is **PH** and manifold outlet specification is **L** (with selectable fitting blocks (imperial))
**MH**: with NPT1/4 female thread block

**Individual air supply and exhaust apacer** Note6
**Blank**: No spacer
**PP8** : Individual air supply spacer (with $\phi$8 fitting)
**PP0** : Individual air supply spacer (with $\phi$10 fitting)
**PR8** : Individual exhaust spacer (with $\phi$8 fitting)
**PR0** : Individual exhaust spacer (with $\phi$10 fitting)

**Port isolator**
**Blank**: No port isolator
**SP** : For 1(P) port
**SR** : For 3(R2), 5(R1) ports
**SA** : For 1(P), 3(R2), 5(R1) ports

**Voltage**
**DC12V**
**DC24V**
**AC100V** Note9
**AC120V** Note9

Enter ○ in each designated station in tables on the next page.

# F18 Series

## Split Manifold Plug-in Type

# Specifications Confirmation Form 2/2

Mounting valve models

※For specifying the valve and block-off plate to be mounted at each station, enter ○ in each applicable box below.

| Mounting valve, block-off plate \ Station | | 1 | 2 | 3 | 4 | 5 | 6 | 7 | 8 | 9 | 10 | 11 | 12 | 13 | 14 | 15 | 16 | 17 | 18 | 19 | 20 |
|---|---|---|---|---|---|---|---|---|---|---|---|---|---|---|---|---|---|---|---|---|---|
| **F18T0** | 2-position, for single solenoid only | | | | | | | | | | | | | | | | | | | | |
| **F18T1** | 2-position, single solenoid specification | | | | | | | | | | | | | | | | | | | | |
| **F18T2** | 2-position, double solenoid specification | | | | | | | | | | | | | | | | | | | | |
| **F18T3** | 3-position, closed center | | | | | | | | | | | | | | | | | | | | |
| **F18T4** | 3-position, exhaust center | | | | | | | | | | | | | | | | | | | | |
| **F18T5** | 3-position, pressure center | | | | | | | | | | | | | | | | | | | | |
| **F18BPP** | Block-off plate | | | | | | | | | | | | | | | | | | | | |
| Manual override (**-R**) Manual override lever[Note3] | | | | | | | | | | | | | | | | | | | | | |
| Valve outlet type[Note4] | **FJ** With dual use fitting block | | | | | | | | | | | | | | | | | | | | |
| | **FJ5** With single use fitting block | | | | | | | | | | | | | | | | | | | | |
| | **FJ6** With single use fitting block | | | | | | | | | | | | | | | | | | | | |
| | **FM** With female thread block | | | | | | | | | | | | | | | | | | | | |
| | **FMH** With female thread block | | | | | | | | | | | | | | | | | | | | |
| Manifold fitting specification[Note5] (Manifold side outlet port) | **J5** With single use fitting block | | | | | | | | | | | | | | | | | | | | |
| | **J6** With single use fitting block | | | | | | | | | | | | | | | | | | | | |
| | **MH** With female thread block | | | | | | | | | | | | | | | | | | | | |
| **PP8** | Individual air supply spacer (with $\phi$ 8 fitting) | | | | | | | | | | | | | | | | | | | | |
| **PP0** | Individual air supply spacer (with $\phi$ 10 fitting) | | | | | | | | | | | | | | | | | | | | |
| **PR8** | Individual exhaust spacer (with $\phi$ 8 fitting) | | | | | | | | | | | | | | | | | | | | |
| **PR0** | Individual exhaust spacer (with $\phi$ 10 fitting) | | | | | | | | | | | | | | | | | | | | |
| Port isolator (**-SP**) For 1(P) port[Note8] | | | | | | | | | | | | | | | | | | | | | |
| Port isolator (**-SR**) For 3(R2), 5(R1) ports[Note8] | | | | | | | | | | | | | | | | | | | | | |
| Port isolator (**-SA**) For 1(P), 3(R2), 5(R1) ports[Note8] | | | | | | | | | | | | | | | | | | | | | |

Notes:
1. Cannot be mounted on the external pilot manifold.
2. Cannot be mounted on the internal pilot manifold.
3. To designate a manual override lever, enter ○ in the manual override boxes of the designated stations in the above table.
4. When the manifold outlet specifications are "**Blank**", select fitting specification for each station, and enter ○ in the valve outlet type boxes of the above table.
5. When the manifold outlet specifications are **L** (with selectable fitting), select manifold fitting specification for each station, and enter ○ in the manifold fitting specification boxes of the above table.
6. When mounting the individual air supply or exhaust spacer, enter ○ in the spacer boxes of the desigated stations in the above table.
7. To designate a port isolator box of the designated station, enter ○ in the port isolator box in the above table.
8. Port isolators can be installed only when piping blocks are mounted on both sides. In addtion, only 1 port isolator can be mounted in 1 manifold for **-SA**, or 1 each port isolator dor **-SP** and **-SR** for a total of 2 locations.
   When shipping, the designated port isolators are installed between the designated station and the station to its immediate left (the next smaller stn. No.).
9. AC100V and AC120V can only be used when wiring specifications are **-D250**□, **-D251**□ (D-sub connector), or **-T200** (terminal).
10. Can be selected only when the manifold type is **P**.
11. Can be selected only when the manifold type is **PH**.

| Quantity set | Delivery |
|---|---|

# F18 Series

## Serial Transmission Compatible Manifold

# Specifications Confirmation Form 1/2

| Order Date Month/ Day/ Year/ | |
|---|---|
| Company name | |
| Contact person | |
| Order No. | |

• Fill in selections inside the thick-lined boxes.

**Manifold model**

**F18M □ S/SH □ □ - □ - □ - □ - □**

**Valve units**
**2** to □[Note]

Note: For the maximum number of units, check the table for mximum number of valve units by wiring specification on page 88.

**Manifold outlet specification**
**J** : With dual use fitting blocks
**M** : With female thread blocks
**L** : With selectable fitting blocks
**Blank**: With plates (direct piping type)

**Pilot specification**
**Blank**: Internal pilot manifold
**G** : External pilot manifold

**Piping block specification (air supply and exhaust)**
Can be selected only when the manifold type is **S** (metric).
**JR** : With dual use fitting, right-side mounting
**JL** : With dual use fitting, left-side mounting
**JD** : With dual use fitting, both-side mounting
**MR** : With female thread, right-side mounting
**ML** : With female thread, left-side mounting
**MD** : With female thread, both-side mounting

Can be selected only when the manifold type is **SH** (imperial).
**MRH**: With female thread, right-side mounting
**MLH**: With female thread, left-side mounting
**MDH**: With female thread, both-side mounting

**Transmission block specification**
**31** : For OMRON B7A Link Terminal (standard)
**32** : For OMRON B7A Link Terminal (high speed)
**A1**: For OMRON CompoBus/S (16 outputs)
**B1**: For CC-Link (16 outputs)
**H1**: For CompoNet (16 outputs)[Note9]

**Wiring connection specification**
**Blank**: Packed wiring
**W** : Double wiring

**Wiring position (wiring block)**
**Blank**: Left-side mounting
**R** : Right-side mounting[Note9]

**Mounting valve model**

**stn. □ F18T** Valve specification **□ - Note 3 - A1 - Note 5 - Note 6 - Note 7 DC24V**

When manifold outlet specifications are **J**, **M**, or **L**.

**Operation type**
**Blank**: Internal pilot type[Note1]
**G** : External pilot type[Note2]

**Manual override**
**Blank**: Manual override button
**R** : Manual override lever[Note3]

**Valve outlet type**
**A1** : With plate (When manifold outlet specification are **J**, **M**, or **L**, the valve type should be **A1**.)

Can be selected only when the manifold type is **S** and the manifold outlet specification is "**Blank**".
**FJ** : With dual use $\phi$8 and $\phi$10 fitting block[Note4]
**FJ5** : With single use $\phi$8 fitting block[Note4]
**FJ6** : With single use $\phi$10 fitting block[Note4]
**FM** : With Rc1/4 female thread block[Note4]

Can be selected only when the manifold type is **SH** and the manifold outlet specification is "**Blank**".
**FMH** : With NPT1/4 female thread block[Note4]

**Port isolator**
**Blank**: No port isolator
**SP** : For 1(P) port[Note7]
**SR** : For 3(R2), 5(R1) ports[Note7]
**SA** : For 1(P), 3(R2), 5(R1) ports[Note7]

**Individual air supply and exhaust apacer**[Note6]
**Blank**: No spacer
**PP8** : Individual air supply spacer (with $\phi$8 fitting)
**PP0** : Individual air supply spacer (with $\phi$10 fitting)
**PR8** : Individual exhaust spacer (with $\phi$8 fitting)
**PR0** : Individual exhaust spacer (with $\phi$10 fitting)

**Manifold fitting specifications**[Note5]
Can be selected only when the manifold type is **S** and the manifold outlet specification is **L** (with selectable fitting blocks (metric))
**J5** : Manifold side outlet port with single use $\phi$8 fitting block
**J6** : Manifold side outlet port with single use $\phi$10 fitting block

Can be selected only when the manifold type is **SH** and the manifold outlet specification is **L** (with selectable fitting blocks (imperial))
**MH** : with NPT1/4 female thread block

Enter ○ in each designated station in tables on the next page.

# F18 Series

## Serial Transmission Compatible Manifold

# Specifications Confirmation Form 2/2

※For specifying the valve and block-off plate to be mounted at each station, enter ○ in each applicable box below.

| Mounting valve models | Mounting valve, block-off plate \ Station | | 1 | 2 | 3 | 4 | 5 | 6 | 7 | 8 | 9 | 10 | 11 | 12 | 13 | 14 | 15 | 16 | 17 | 18 | 19 | 20 |
|---|---|---|---|---|---|---|---|---|---|---|---|---|---|---|---|---|---|---|---|---|---|---|
| | **F18T0** | 2-position, for single solenoid only | | | | | | | | | | | | | | | | | | | | |
| | **F18T1** | 2-position, single solenoid specification | | | | | | | | | | | | | | | | | | | | |
| | **F18T2** | 2-position, double solenoid specification | | | | | | | | | | | | | | | | | | | | |
| | **F18T3** | 3-position, closed center | | | | | | | | | | | | | | | | | | | | |
| | **F18T4** | 3-position, exhaust center | | | | | | | | | | | | | | | | | | | | |
| | **F18T5** | 3-position, pressure center | | | | | | | | | | | | | | | | | | | | |
| | **F18BPP** | Block-off plate | | | | | | | | | | | | | | | | | | | | |
| | Manual override (**-R**) Manual override lever[Note3] | | | | | | | | | | | | | | | | | | | | | |
| | Valve outlet type[Note4] | **FJ** With dual use fitting block | | | | | | | | | | | | | | | | | | | | |
| | | **FJ5** With single use fitting block | | | | | | | | | | | | | | | | | | | | |
| | | **FJ6** With single use fitting block | | | | | | | | | | | | | | | | | | | | |
| | | **FM** With female thread block | | | | | | | | | | | | | | | | | | | | |
| | | **FMH** With female thread block | | | | | | | | | | | | | | | | | | | | |
| | Manifold fitting specification[Note5] (Manifold side outlet port) | **J5** With single use fitting block | | | | | | | | | | | | | | | | | | | | |
| | | **J6** With single use fitting block | | | | | | | | | | | | | | | | | | | | |
| | | **MH** With female thread block | | | | | | | | | | | | | | | | | | | | |
| | **PP8** | Individual air supply spacer (with $\phi$ 8 fitting) | | | | | | | | | | | | | | | | | | | | |
| | **PP0** | Individual air supply spacer (with $\phi$ 10 fitting) | | | | | | | | | | | | | | | | | | | | |
| | **PR8** | Individual exhaust spacer (with $\phi$ 8 fitting) | | | | | | | | | | | | | | | | | | | | |
| | **PR0** | Individual exhaust spacer (with $\phi$ 10 fitting) | | | | | | | | | | | | | | | | | | | | |
| | Port isolator (**-SP**) For 1(P) port[Note8] | | | | | | | | | | | | | | | | | | | | | |
| | Port isolator (**-SR**) For 3(R2), 5(R1) ports[Note8] | | | | | | | | | | | | | | | | | | | | | |
| | Port isolator (**-SA**) For 1(P), 3(R2), 5(R1) ports[Note8] | | | | | | | | | | | | | | | | | | | | | |

Notes:1. Cannot be mounted on the external pilot manifold.
2. Cannot be mounted on the internal pilot manifold.
3. To designate a manual override lever, enter ○ in the manual override boxes of the designated stations in the above table.
4. When the manifold outlet specifications are "**Blank**", select fitting specification for each station, and enter ○ in the valve outlet type boxes of the above table.
5. When the manifold outlet specifications are **L** (with selectable fitting), select manifold fitting specification for each station, and enter ○ in the manifold fitting specification boxes of the above table.
6. When mounting the individual air supply or exhaust spacer, enter ○ in the spacer boxes of the desigated stations in the above table.
7. To designate a port isolator box of the designated station, enter ○ in the port isolator box in the above table.
8. Port isolators can be installed only when piping blocks are mounted on both sides. In addtion, only 1 port isolator can be mounted in 1 manifold for **-SA**, or 1 each port isolator dor **-SP** and **-SR** for a total of 2 locations.
When shipping, the designated port isolators are mounted between the designated station and the station to its immediate left (the next smaller stn. No.).
9. The **-H1** (for CompoNet (16 outputs)) transmission block is mountable on the left side only.

| Quantity set | Delivery |
|---|---|

MEMO

# Limited Warranty

KOGANEI CORP. warrants its products to be free from defects in material and workmanship subject to the following provisions.

**Warranty Period** The warranty period is 180 days from the date of delivery.

**Koganei Responsibility** If a defect in material or workmanship is found during the warranty period, KOGANEI CORP. will replace any part proved defective under normal use free of charge and will provide the service necessary to replace such a part.

**Limitations**

- This warranty is in lieu of all other warranties, expressed or implied, and is limited to the original cost of the product and shall not include any transportation fee, the cost of installation or any liability for direct, indirect or consequential damage or delay resulting from the defects.
- KOGANEI CORP. shall in no way be liable or responsible for injuries or damage to persons or property arising out of the use or operation of the manufacturer's product.
- This warranty shall be void if the engineered safety devices are removed, made inoperative or not periodically checked for proper functioning.
- Any operation beyond the rated capacity, any improper use or application, or any improper installation of the product, or any substitution upon it with parts not furnished or approved by KOGANEI CORP., shall void this warranty.
- This warranty covers only such items supplied by KOGANEI CORP. The products of other manufacturers are covered only by such warranties made by those original manufacturers, even though such items may have been included as the components.

The specifications are subject to change without notice.

URL http://www.koganei.co.jp

E-mail: overseas@koganei.co.jp


## KOGANEI CORPORATION

**OVERSEAS DEPARTMENT**
3-11-28, Midori-cho, Koganei City, Tokyo 184-8533, Japan
Tel: 81-42-383-7271 Fax: 81-42-383-7276

**KOGANEI INTERNATIONAL AMERICA, INC.**
39300 Civic Center Dr., Suite 280, Fremont, CA 94538, U.S.A.
Tel : 1-510-744-1626 Fax : 1-510-744-1676

**SHANGHAI KOGANEI INTERNATIONAL TRADING CORPORATION**
Room 2606-2607, Tongda Venture Building No.1, Lane 600, Tianshan Road, Shanghai, 200051, China
Tel: 86-21-6145-7313 Fax: 86-21-6145-7323

**TAIWAN KOGANEI TRADING CO., LTD.**
Rm. 2, 13F., No88, Sec. 2, Zhongxiao E. Rd., Zhongzheng Dist., Taipei City 100, Taiwan (ROC)
Tel: 886-2-2393-2717 Fax: 886-2-2393-2719

**KOGANEI KOREA CO., LTD.**
6F-601, Tower Bldg., 1005, Yeongdeo-dong, Giheung-gu, Yongin-si, Gyeonggi-do, 446-908, Korea
Tel: 82-31-246-0414 Fax: 82-31-246-0415

**KOGANEI (THAILAND) CO., LTD.**
3300/90, Tower B, Elephant Tower, 16th Fl., Phaholyothin Road, Chomphon, Chatuchak, Bangkok 10900, Thailand
Tel: 66-2-937-4250 Fax: 66-2-937-4254

**KOGANEI ASIA PTE. LTD.**
69 Ubi Road 1, #05-18 Oxley Bizhub, Singapore 408731
Tel: 65-6293-4512 Fax: 65-6293-4513


6/'15 100 ABAB
©KOGANEI CORP. PRINTED IN JAPAN

KOGANEI

No.BK-P033

NEW Products

http://www.koganei.co.jp

RoHS compliant product

# F10 & F15 series solenoid valves

# IP specifications

**IP65 compliant protective construction can be used in a wide range of operating environments!**

**Ingress protection according to IEC 60529 standard**

Electrical enclosures constructed to protect against intrusion of dust and water from the outside

International Protection Rating

**IP65**

2nd digit indicates protection against the ingress of water[Note]
Jets of water by a nozzle against enclosure from any direction has no harmful effects.

1st digit indicates protection against solid foreign objects
No ingress of dust.

Note: The device cannot be used underwater.

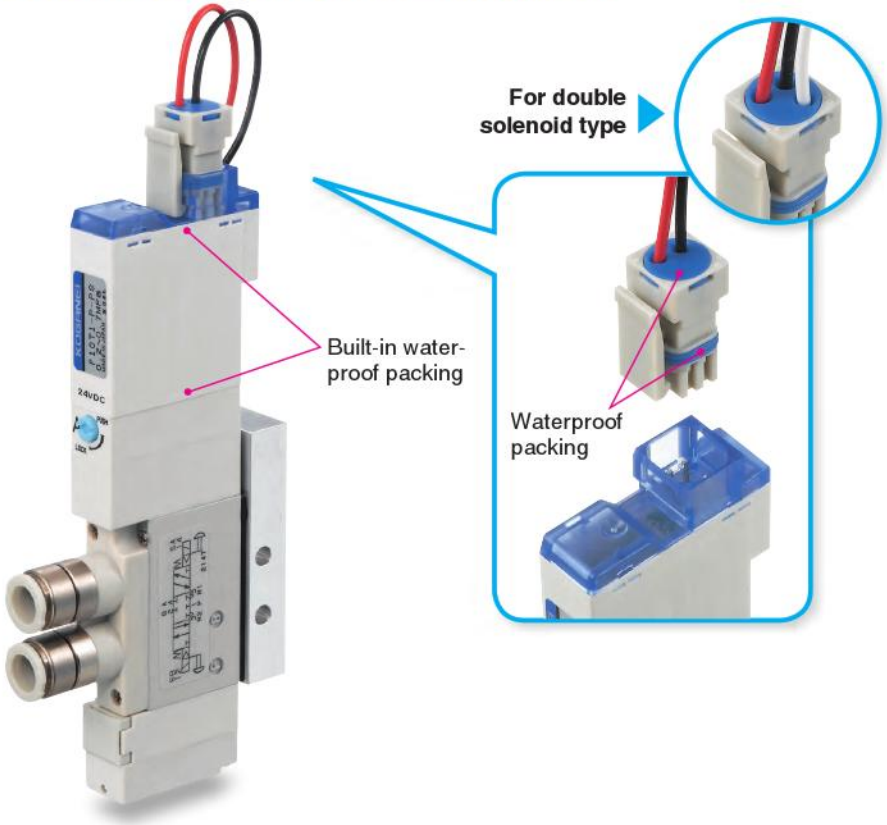


## Variations

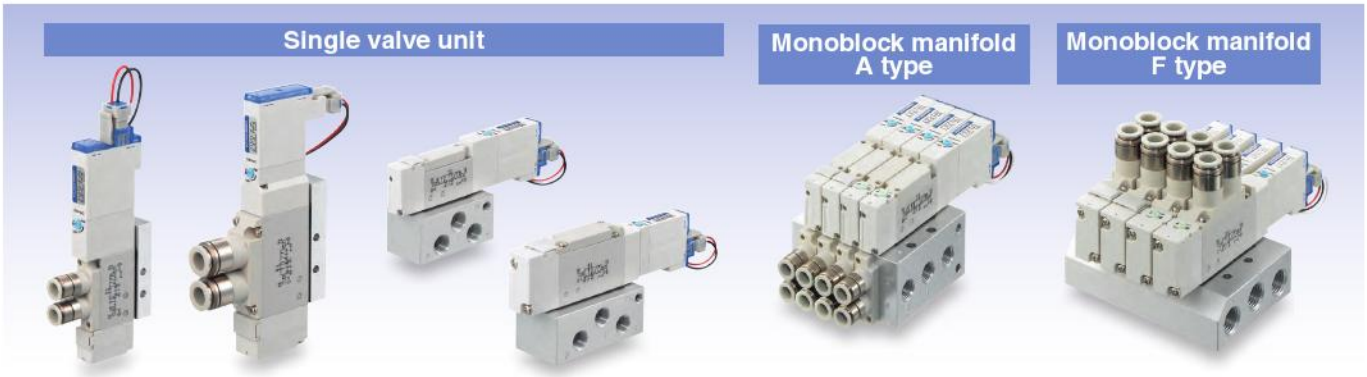


**CAUTION** Before use, be sure to read the "Safety Precautions" in the general personal catalog.

*Consult the nearest Koganei sales office for use in locations or environments subject to liquids other than water, such as organic solvents, cutting oil, or chemicals.

# F10, F15 Series Single Valve Unit Order Codes

## Valve size

**F10**
10 mm [0.394 in.] width
Standard type

**F10L**
10 mm [0.394 in.] width
Low-current type

**F15**
15 mm [0.591 in.] width
Standard type

**F15L**
15 mm [0.591 in.] width
Low-current type

## Valve outlet type

Without inlet/outlet block

With A type outlet plate

With A type sub-base

**-A2 inlet/outlet port**
**F10:** Rc1/8
**F15:** Rc1/8
**-A2H inlet/outlet port**
**F10:** NPT1/8
**F15:** NPT1/8

With outlet port dual use fitting block

**Outlet port fitting**
**F10:** $\phi$ 4, $\phi$ 6
**F15:** $\phi$ 6, $\phi$ 8

With outlet port single use fitting block

**Outlet port fitting**
**F10:** $\phi$ 4
**F15:** $\phi$ 6

With outlet port single use fitting block

**Outlet port fitting**
**F10:** $\phi$ 6
**F15:** $\phi$ 8

With outlet port female thread block

**-FM outlet port**
**F10:** M5 × 0.8
**F15:** Rc1/8
**-FMH outlet port**
**F10:** 10-32UNF
**F15:** NPT1/8

With outlet port dual use fitting block
With inlet port
female thread block[Note6]

**Outlet port fitting**
**F10:** $\phi$ 4, $\phi$ 6
**F15:** $\phi$ 6, $\phi$ 8

With outlet port
female thread block
With inlet port
female thread block

**-F4 inlet/outlet port**
**F10:** M5 × 0.8
**F15:** Rc1/8
**-F4H inlet/outlet port**
**F10:** 10-32UNF
**F15:** NPT1/8

With outlet port
single use fitting block
With inlet port
female thread block[Note6]

**Outlet port fitting**
**F10:** $\phi$ 4
**F15:** $\phi$ 6

With outlet port
single use fitting block
With inlet port
female thread block[Note6]

**Outlet port fitting**
**F10:** $\phi$ 6
**F15:** $\phi$ 8

**3-port normally closed (NC)**[Note5]
With outlet port
single use fitting block

**Outlet port fitting**
**F10:** $\phi$ 4
**F15:** $\phi$ 6

**3-port normally open (NO)**[Note5]
With outlet port
single use fitting block

**Outlet port fitting**
**F10:** $\phi$ 4
**F15:** $\phi$ 6

**3-port normally closed (NC)**[Note5]
With outlet port
single use fitting block

**Outlet port fitting**
**F10:** $\phi$ 6
**F15:** $\phi$ 8

**3-port normally open (NO)**[Note5]
With outlet port
single use fitting block

**Outlet port fitting**
**F10:** $\phi$ 6
**F15:** $\phi$ 8

**3-port normally closed (NC)**[Note5]
With outlet port
female thread block

**-FMA outlet port**
**F10:** M5 × 0.8
**F15:** Rc1/8
**-FMAH outlet port**
**F10:** 10-32UNF
**F15:** NPT1/8

**3-port normally open (NO)**[Note5]
With outlet port
female thread block

**-FMB outlet port**
**F10:** M5 × 0.8
**F15:** Rc1/8
**-FMBH outlet port**
**F10:** 10-32UNF
**F15:** NPT1/8

**3-port normally closed (NC)**[Note5]
With outlet port
female thread block
With inlet port
female thread block

**-F4A inlet/outlet port**
**F10:** M5 × 0.8
**F15:** Rc1/8
**-F4AH inlet/outlet port**
**F10:** 10-32UNF
**F15:** NPT1/8

**3-port normally open (NO)**[Note5]
With outlet port
female thread block
With inlet port
female thread block

**-F4B inlet/outlet port**
**F10:** M5 × 08
**F15:** Rc1/8
**-F4BH inlet/outlet port**
**F10:** 10-32UNF
**F15:** NPT1/8

**3-port normally closed (NC)**[Note5]
With outlet port
single use fitting block
With inlet port
female thread block[Note6]

**Outlet port fitting**
**F10:** $\phi$ 4
**F15:** $\phi$ 6

**3-port normally open (NO)**[Note5]
With outlet port
single use fitting block
With inlet port
female thread block[Note6]

**Outlet port fitting**
**F10:** $\phi$ 4
**F15:** $\phi$ 6

**3-port normally closed (NC)**[Note5]
With outlet port
single use fitting block
With inlet port
female thread block[Note6]

**Outlet port fitting**
**F10:** $\phi$ 6
**F15:** $\phi$ 8

**3-port normally open (NO)**[Note5]
With outlet port
single use fitting block
With inlet port
female thread block[Note6]

**Outlet port fitting**
**F10:** $\phi$ 6
**F15:** $\phi$ 8

## Wiring specification

L type plug connector
Without connector

S type plug connector
Without connector

S type plug connector
Lead wire 300 mm
[11.8 in.]

L type plug connector
Lead wire 300 mm
[11.8 in.]

S type plug connector
Lead wire 3000 mm
[118 in.]

L type plug connector
Lead wire 3000 mm
[118 in.]

DIN connector type
with indicator[Note10]

DIN connector type
without connector[Note10]

**-39N**

## Valve specification

**T0 :** 2-position, for single solenoid only
**T1 :** 2-position single solenoid specification (for both single and double solenoid use)
**T2 :** 2-position double solenoid specification (for both single and double solenoid use)
**T3 :** 3-position closed center
**T4 :** 3-position exhaust center[Note3]
**T5 :** 3-position pressure center[Note3]
**TA :** Tandem 3-port (NC and NC)[Note4]
**TB :** Tandem 3-port (NO and NO)[Note4]
**TC :** Tandem 3-port (NC and NO)[Note4]

## Operation type

**Blank**
Internal pilot type

**G**
External pilot type[Note]
(for positive pressure)

**V**
External pilot type[Note]
(for vacuum)※
※ This is a vacuum valve.

Note: When using as a single unit, select **-A2**, **-A2H** (A type with sub-base) for the valve outlet type. Without a sub-base, piping for the external pilot is not possible.

## Manual override

Manual override button

No protrusion with
DIN connector

Manual override lever[Note1]

Protruding locking type[Note9]

| Valve size | Valve specification | Operation type | IP65 specification | Manual override | Valve outlet type | Wiring specification | Voltage |
|---|---|---|---|---|---|---|---|
| F10<br>F10L<br>F15<br>F15L | T0<br>T1<br>T2<br>T3<br>T4[Note3]<br>T5[Note3]<br>TA[Note4]<br>TB[Note4]<br>TC[Note4] | Blank<br>G<br>V | -P | Blank<br>-R[Note1]<br>-83[Note9] | Blank[Note2]<br>-A1[Note2]<br>-A2<br>-A2H<br>-FJ[Note2,3]<br>-FJ5[Note2,3]<br>-FJ6[Note2,3]<br>-FM[Note2,3]<br>-FMH[Note2,3]<br>-F3[Note4]<br>-F4[Note4]<br>-F4H[Note4]<br>-F5[Note4]<br>-F6[Note4]<br>-FJ5A[Note2,3]<br>-FJ5B[Note2,3]<br>-FJ6A[Note2,3]<br>-FJ6B[Note2,3]<br>-FMA[Note2,3]<br>-FMAH[Note2,3]<br>-FMB[Note2,3]<br>-FMBH[Note2,3]<br>-F4A[Note4]<br>-F4AH[Note4]<br>-F4B[Note4]<br>-F4BH[Note4]<br>-F5A[Note4]<br>-F5B[Note4]<br>-F6A[Note4]<br>-F6B[Note4] | Blank<br>-PN<br>-PS<br>-PL<br>-PS3<br>-PL3<br>-39L[Note10]<br>-39N[Note10] | DC24V<br>DC12V[Note7]<br>AC100V[Note6, 11]<br>AC120V[Note8]<br>AC240V[Note6, 9] |

Notes: 1. When the valve specification is **T1** or **T2**, the manual override lever is placed only on the A side. This is not available with **-39**□.
2. Two manifold mounting screws are included.
3. Not available in the vacuum valves.
4. Not available in external pilot type and vacuum valves.
5. Only for valve specification **T0**, **T1**, and **T2**.
6. Thread size for the inlet port female thread block is **F10**: M5 × 0.8, **F15**: Rc1/8.
7. Not available in low-current type.
8. Not available in low-current type and tandem 3-port valves.
9. Only for wiring specification **-39**□.
10. Only for **F15** series and not available for valve specification **T1**, **TA**, **TB**, and **TC**. In addition, the valve is used only as a double solenoid for **T2**.
11. Not available with DIN connectors.

Remark: Negative common specifications are also available as made to order products (add **-129W** to the end of order code). For details, consult us.

Manifolds on which IP specification valves can be mounted are the A type and F type monoblock manifold, and the split manifold non-plug-in type in the F10 and F15 series. For the A type and the split manifold non-plug-in type, you must put a **-P** after the operation type of each valve. For the F type, you must put a **-P** after the valve specifications of each valve. They can be combined only with IP specification valves. See the F series solenoid valve catalog for details about the manifold order codes.

# F10, F15 Series Single Valve Unit Additional Parts Order Codes

## ● For internal pilot

**F □ Z - □**

**Valve size**
**10:** 10 mm [0.394 in.] width
**15:** 15 mm [0.591 in.] width

**Parts content**
**21** : Mounting bracket (mounting bracket, 2 mounting screws)
**25** : Sub-base Rc1/8 (sub-base body, gasket, exhaust valve)[Note1]
**25H** : Sub-base NPT1/8 (sub-base body, gasket, exhaust valve)[Note1]
**P** : Plate (plate, gasket, 2 mounting screws)
**J** : Dual use fitting block (fitting block, gasket, 2 mounting screws)
**J5** : Single use fitting block **F10**: $\phi$ 4, **F15**: $\phi$ 6 (fitting block, gasket, 2 mounting screws)
**J6** : Single use fitting block **F10**: $\phi$ 6, **F15**: $\phi$ 8 (fitting block, gasket, 2 mounting screws)
**J5A** : Single use fitting block for 3-port **F10**: $\phi$ 4, **F15**: $\phi$ 6 (fitting block, gasket, 2 mounting screws)[Note3]
**J6A** : Single use fitting block for 3-port **F10**: $\phi$ 6, **F15**: $\phi$ 8 (fitting block, gasket, 2 mounting screws)[Note3]
**M** : Female thread block **F10**: M5 × 0.8 **F15**: Rc1/8 (female thread block, gasket, 2 mounting screws)
**MH** : Female thread block **F10**: 10-32UNF **F15**: NPT1/8 (female thread block, gasket, 2 mounting screws)
**MA** : Female thread block for 3-port **F10**: M5 × 8 **F15**: Rc1/8 (female thread block, gasket, 2 mounting screws)[Note3]
**MAH** : Female thread block for 3-port **F10**: 10-32UNF **F15**: NPT1/8 (female thread block, gasket, 2 mounting screws)[Note3]
**MPP** : P port female thread block **F10**: M5 × 0.8 **F15**: Rc1/8 (P port female thread block, gasket)[Note1]
**MPPH** : P port female thread block **F10**: 10-32UNF **F15**: NPT1/8 (P port female thread block, gasket)[Note1]
**GS1** : Gasket (gasket, exhaust valve)[Note2]

Notes: 1. Valve mounting screws are not included.
2. Caution should be exercised as this gasket is different from the **GS2** gasket for the split-type manifolds.
3. Common to both normally closed (NC) and normally open (NO) types. Select the mounting direction by application requirements.

## ● For external pilot

**F □ Z - □**

**Valve size**
**10:** 10 mm [0.394 in.] width
**15:** 15 mm [0.591 in.] width

**Parts content**
**P** : Plate (plate, gasket, 2 mounting screws)
**J** : Dual use fitting block (fitting block, gasket, 2 mounting screws)
**J5** : Single use fitting block **F10**: $\phi$ 4, **F15**: $\phi$ 6 (fitting block, gasket, 2 mounting screws)
**J6** : Single use fitting block **F10**: $\phi$ 6, **F15**: $\phi$ 8 (fitting block, gasket, 2 mounting screws)
**J5A** : Single use fitting block for 3-port **F10**: $\phi$ 4, **F15**: $\phi$ 6 (fitting block, gasket, 2 mounting screws)[Note1]
**J6A** : Single use fitting block for 3-port **F10**: $\phi$ 6, **F15**: $\phi$ 8 (fitting block, gasket, 2 mounting screws)[Note1]
**M** : Female thread block **F10**: M5 × 0.8 **F15**: Rc1/8 (female thread block, gasket, 2 mounting screws)
**MH** : Female thread block **F10**: 10-32UNF **F15**: NPT1/8 (female thread block, gasket, 2 mounting screws)
**MA** : Female thread block for 3-port **F10**: M5 × 0.8 **F15**: Rc1/8 (female thread block, gasket, 2 mounting screws)[Note1]
**MAH** : Female thread block for 3-port **F10**: 10-32UNF **F15**: NPT1/8 (female thread block, gasket, 2 mounting screws)[Note1]
**GS1** : Gasket (gasket, exhaust valve)[Note2]

Notes: 1. Common to both normally closed (NC) and normally open (NO) types. Select the mounting direction by application requirements.
2. Caution should be exercised as this gasket is different from the **GS2** gasket for the split type manifolds.

## Sub-base for external pilot

**F □ ZG - 25**

**Valve size**
**10:** 10 mm [0.394 in.] width
**15:** 15 mm [0.591 in.] width
Sub-base Rc1/8

**F □ ZG - 25H**

**Valve size**
**10:** 10 mm [0.394 in.] width
**15:** 15 mm [0.591 in.] width
Sub-base NPT1/8

## Connector-related order codes

**JAZ - P - □** (For Double solenoid valve only)

**Valve specification**
For **T2, T3, T4, T5, TA, TB, TC**

**Connector specification**
**CP** : Connector, lead wire length 300 mm [11.8 in.]
**CP3** : Connector, lead wire length 3000 mm [118 in.]
**PA** : Positive common A type, lead wire length 300 mm [11.8 in.] ★
**PA3** : Positive common A type, lead wire length 3000 mm [118 in.] ★
**PB** : Positive common B type, lead wire length 300 mm [11.8 in.] ★
**PB3** : Positive common B type, lead wire length 3000 mm [118 in.] ★
**PC** : Positive common C type, lead wire length 300 mm [11.8 in.] ★
**PC3** : Positive common C type, lead wire length 3000 mm [118 in.] ★

The ★ (asterisk) indicates a common connector assembly.

**JAZ0 - P - □** (For Single solenoid valve only)

**Valve specification**
For **T0, T1**

**Connector specification**
**CP** : Connector, lead wire length 300 mm [11.8 in.]
**CP3** : Connector, lead wire length 3000 mm [118 in.]
**PA** : Positive common A type, lead wire length 300 mm [11.8 in.] ★
**PA3** : Positive common A type, lead wire length 3000 mm [118 in.] ★
**PB** : Positive common B type, lead wire length 300 mm [11.8 in.] ★
**PB3** : Positive common B type, lead wire length 3000 mm [118 in.] ★
**PC** : Positive common C type, lead wire length 300 mm [11.8 in.] ★
**PC3** : Positive common C type, lead wire length 3000 mm [118 in.] ★

The ★ (asterisk) indicates a common connector assembly.

Note 1: If the valve specification is **T1**, select the single solenoid type **JAZO-P-** □ only.
2: To switch between single and double solenoid (T1/T2), purchase and use the connector specified for the single or double solenoid (the single and double solenoid have a different number of holes in the packing for the lead wires).
3: The **JAZO-P-** □ have no white lead wire.
4: The connectors must be disassembled to add valves to the common connector assemblies. Consult the nearest Koganei sales office.
5: Consult the nearest Koganei sales office for use in locations or environments subject to liquids other than water, such as organic solvents, cutting oil, or chemicals.
6: Consult the nearest Koganei sales office about how to replace the waterproof packing.

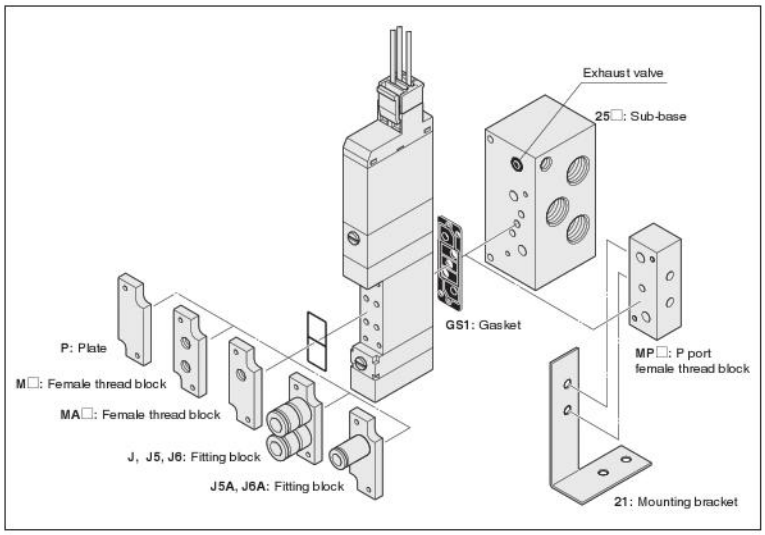

## Dimensions mm [in]

### F10T Valve specifications Operation type -P-A2-PS

### F10T Valve specifications Operation type -P-A2H-PS

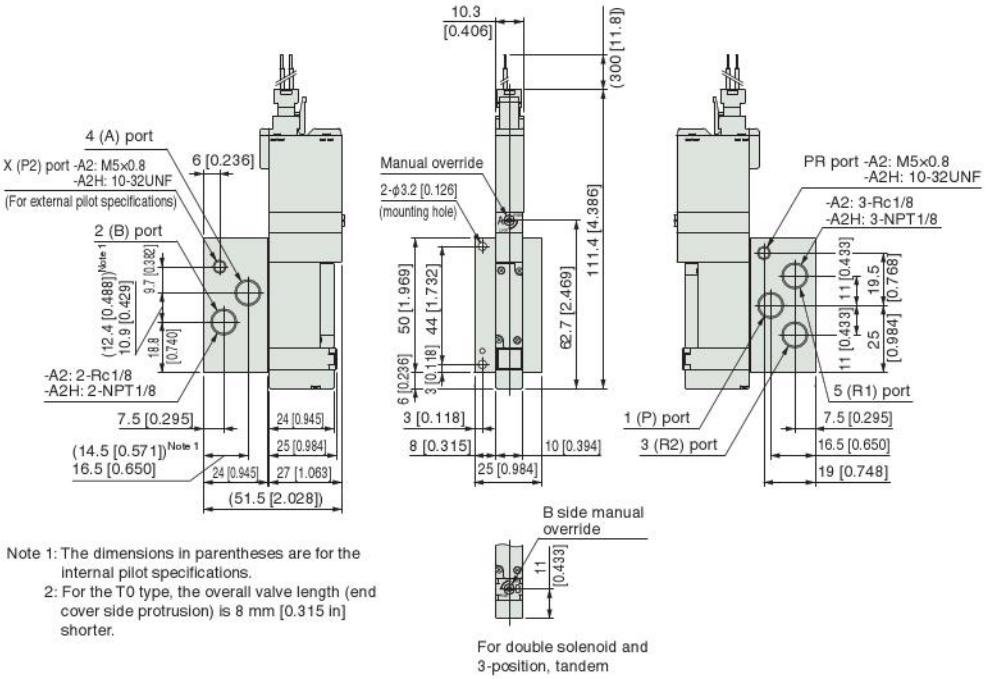


Note 1: The dimensions in parentheses are for the internal pilot specifications.
2: For the T0 type, the overall valve length (end cover side protrusion) is 8 mm [0.315 in] shorter.

● L-type plug connector: -PL

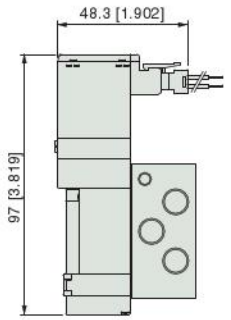


### F15T Valve specifications Operation type -P-A2-PS

### F15T Valve specifications Operation type -P-A2H-PS

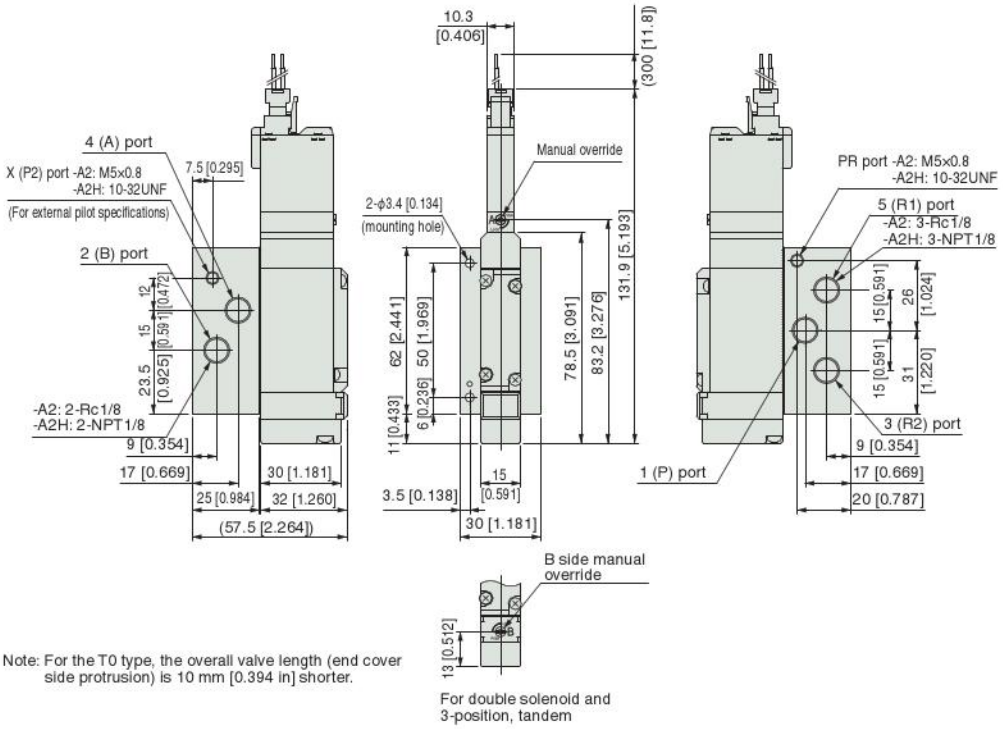


Note: For the T0 type, the overall valve length (end cover side protrusion) is 10 mm [0.394 in] shorter.

● L-type plug connector: -PL

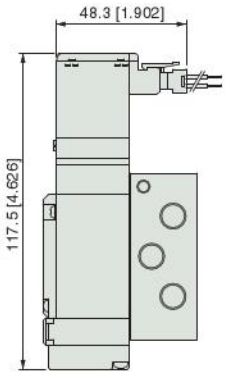


URL http://www.koganei.co.jp

E-mail: overseas@koganei.co.jp


**KOGANEI CORPORATION**

**OVERSEAS DEPARTMENT**
3-11-28, Midori-cho, Koganei City, Tokyo 184-8533, Japan
Tel: 81-42-383-7271 Fax: 81-42-383-7276

**KOGANEI INTERNATIONAL AMERICA, INC.**
39300 Civic Center Dr., Suite 280, Fremont, CA 94538, U.S.A.
Tel : 1-510-744-1626 Fax : 1-510-744-1676

**SHANGHAI KOGANEI INTERNATIONAL TRADING CORPORATION**
Room 2606-2607, Tongda Venture Building No.1, Lane 600, Tianshan Road, Shanghai, 200051, China
Tel: 86-21-6145-7313 Fax: 86-21-6145-7323

**TAIWAN KOGANEI TRADING CO., LTD.**
Rm. 2, 13F., No88, Sec. 2, Zhongxiao E. Rd., Zhongzheng Dist., Taipei City 100, Taiwan (ROC)
Tel: 886-2-2393-2717 Fax: 886-2-2393-2719

**KOGANEI KOREA CO., LTD.**
6F-601, Tower Bldg., 1005, Yeongdeo-dong, Giheung-gu, Yongin-si, Gyeonggi-do, 446-908, Korea
Tel: 82-31-246-0414 Fax: 82-31-246-0415

**KOGANEI (THAILAND) CO., LTD.**
3300/90, Tower B, Elephant Tower,16th Fl., Phaholyothin Road, Chomphon, Chatuchak, Bangkok 10900, Thailand
Tel: 66-2-937-4250 Fax: 66-2-937-4254

**KOGANEI ASIA PTE. LTD.**
69 Ubi Road 1, #05-18 Oxley Bizhub, Singapore 408731
Tel: 65-6293-4512 Fax: 65-6293-4513



5/'15 AB


©KOGANEI CORP. PRINTED IN JAPAN