# DYNA CYLINDERS

*Ultra-reliable, high-function tie-rod cylinder*

**The DYNA cylinders, compact and lightweight mid-sized actuators compatible with ISO standards, offer a wide range of configurations and mounting types to meet various application requirements in a flexible manner. Moreover, the use of a new type of cushion needle and floating seal have made these products user-friendlier.**

*Light & Compact*

## Product Line Up

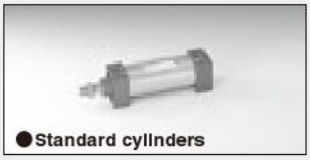
●Standard cylinders

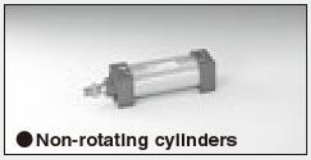
●Non-rotating cylinders

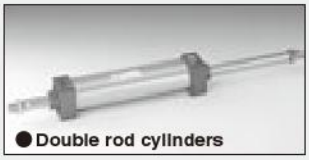
●Double rod cylinders

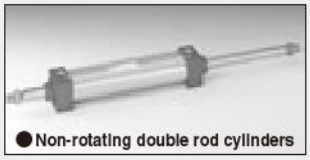
●Non-rotating double rod cylinders

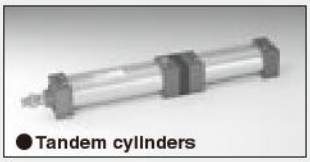
●Tandem cylinders

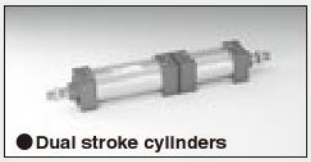
●Dual stroke cylinders

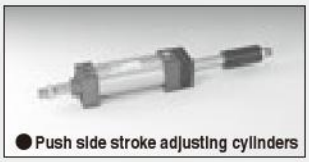
●Push side stroke adjusting cylinders

●Pull side stroke adjusting cylinders

●Low hydraulic cylinders

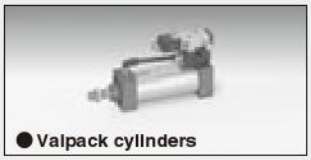
●Valpack cylinders

●End keep cylinders

●Cylinders with brakes

## Mounting type

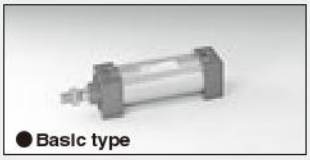
●Basic type

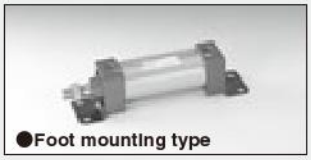
●Foot mounting type

●Axial foot mounting type

●Rod side flange mounting type

●Head side flange mounting type

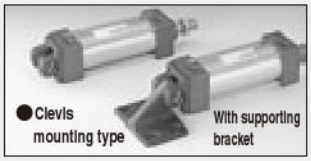
●Clevis mounting type
With supporting bracket

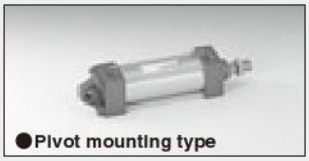
●Pivot mounting type

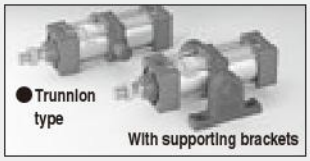
●Trunnion type
With supporting brackets

## Accessory

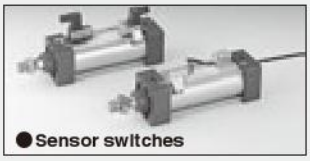
●Sensor switches

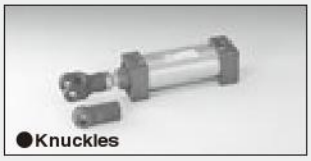
●Knuckles

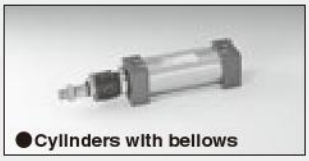
●Cylinders with bellows

## 1 Extensive variation of functions

■ **The series configuration together with its versatile functionality and specifications offers the best match for various mechanical devices.**

## 2 Improved cushioning

■ **Improved cushioning is gained by utilizing floating seal in the cushion section.**

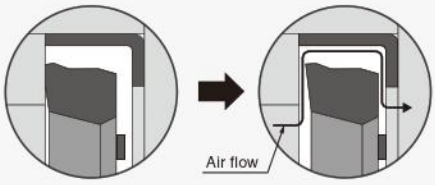


## 3 Long life

■ **Oil impregnated sintered copper alloy in bushings enables stable operation and longer life.**

## 4 New cushion needle

■ **Using a new type of cushion needle that is completely embedded in the cylinder body offers fine adjustment for better performance.**

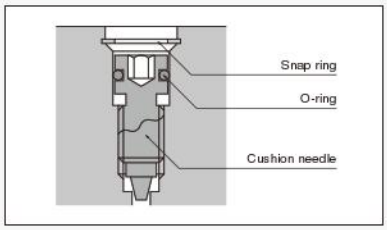


## 5 Safe self-locking mechanism

■ **New release of cylinders with brakes. Exhausting compressed air pushes a brake shoe against the piston rod thereby stopping the cylinder.**

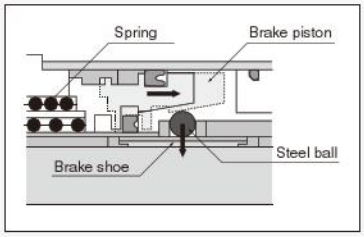


※Steel balls and a brake shoe are secured in position. Operating the brake piston enables activation or release of the brake.

■Series configurations

| | Basic type | Foot mounting type | Axial foot mounting type | Rod side flange mounting type | Head side flange mounting type | Clevis mounting type (with supporting bracket) | Pivot mounting type | Trunnion type (with supporting brackets) |
|---|---|---|---|---|---|---|---|---|
| **Standard cylinder** (ϕ32 [1.260]~ϕ125 [4.921]) | ● | ● | ● | ● | ● | ● | ● | ● |
| **Non-rotating cylinder** (ϕ40 [1.575]~ϕ100 [3.940]) | ○ | ○ | ○ | ○ | ○ | ○ | ○ | ○ |
| **Double rod cylinder** (ϕ32 [1.260]~ϕ125 [4.921]) | ● | ● | ● | ● | | | | ● |
| **Non-rotating double rod cylinder** (ϕ40 [1.575]~ϕ100 [3.940]) | ○ | ○ | ○ | ○ | | | | ○ |
| **Tandem cylinder** (ϕ40 [1.575]~ϕ100 [3.940]) | ● | ● | ● | ● | ● | ● | ● | ● |
| **Dual stroke cylinder** (ϕ40 [1.575]~ϕ100 [3.940]) | ○ | ○ | ○ | ○ | | | | ○ |
| **Push side stroke adjusting cylinder** (ϕ40 [1.575]~ϕ100 [3.940]) | ● | ● | ● | ● | | | | ● |
| **Pull side stroke adjusting cylinder** (ϕ40 [1.575]~ϕ100 [3.940]) | ○ | ○ | ○ | ○ | | | | ○ |
| **Low hydraulic cylinder** (ϕ32 [1.260]~ϕ100 [3.940]) | ● | ● | ● | ● | ● | ● | ● | ● |
| **Valpack cylinder** (ϕ40 [1.575]~ϕ100 [3.940]) | ○ | ○ | ○ | ○ | ○ | ○ | ○ | ○ |
| **End keep cylinder** (ϕ40 [1.575]~ϕ100 [3.940]) | ● | ● | ● | ● | ● | ● | ● | ● |
| **Cylinder with brake** (ϕ40 [1.575]~ϕ100 [3.940]) | ○ | ○ | ○ | ○ | ○ | ○ | ○ | |

mm [in.]

## General precautions

### Media

1. Use air for the media. For the use of any other media, consult us.
2. Air used for the DYNA cylinder should be clean air that contains no deteriorated compressor oil, water, dust, etc. Install an air filter (filtration of a minimum 40 μm) near the cylinder or valve to remove collected liquid or dust. In addition, drain the air filter periodically.

### Piping

Always thoroughly blow off (use compressed air) the tubing before connecting it to the DYNA cylinder. Entering chips, sealing tape, rust, etc., generated during piping work could result in air leaks or other defective operation.

### Atmosphere

If using in locations subject to dripping water, dripping oil, etc., or to large amounts of dust, use a cover to protect the unit.

### Lubrication

This equipment can be used without lubrication. If lubrication is required, use Turbine Oil Class 1 (ISO VG32) or lithium soap-based grease No.2 or equivalent.

## Handling

### Assembly of mounting bracket

Use mounting screws which are supplied with the bracket to assemble the mounting bracket. Use an Allen wrench to tighten the mounting screws evenly. When 4 screws are used, tighten diagonally from each corner. The tightening torque is shown below.

### Assembly and disassembly

For disassembly, insert an Allen wrench to loosen the tie rod nut, and remove the cover.
For assembly, screw in the tie rod nut with the hexagon socket facing outward. Evenly tighten diagonally from each corner. The tightening torque is shown below.

**〈Tightening torque of mounting brackets and tie rod nuts〉**

| Bore size mm [in.] | Tightening torque |
|---|---|
| **32, 40, 50 [1.260, 1.575, 1.969]** | 4.81N·m [3.55ft·lbf] |
| **63 [2.480]** | 12.0N·m [8.85ft·lbf] |
| **80, 100 [3.150, 3.940]** | 24.0N·m [17.7ft·lbf] |
| **125 [4.921]** | 42.2N·m [31.1ft·lbf] |

**●Width across flats of hexagon socket** mm [in.]

| Bore size | Tie rod nut | Mounting bracket |
|---|---|---|
| **32 [1.260]** | 6 [0.236] | 4 [0.157] |
| **40, 50 [1.575, 1.969]** | 6 [0.236] | 4 [0.157] |
| **63 [2.480]** | 8 [0.315] | 5 [0.197] |
| **80, 100 [3.150, 3.940]** | 10 [0.394] | 6 [0.236] |
| **125 [4.921]** | 12 [0.472] | 8 [0.315] |

**● ϕ 32 [1.260in.]**

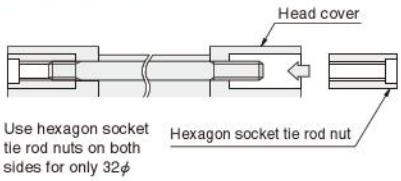


**● ϕ 40 [1.575in.]～ϕ 125 [4.921in.]**

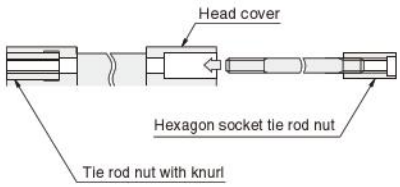

## Manual operation of end keep cylinder locking mechanism

While the locking mechanism is normally released automatically through cylinder operations, it can also be released manually. For manual release, insert an M4×0.7 screw that has 30mm [1.18in.] screw length into the manual override opening, thread it in about 3 turns into the internal lock piston, and then pull up the screw. To maintain the manual override for adjustment, etc., thread the locknut onto the screw and, with the locking mechanism in a released state, tighten the locknut against the cylinder.

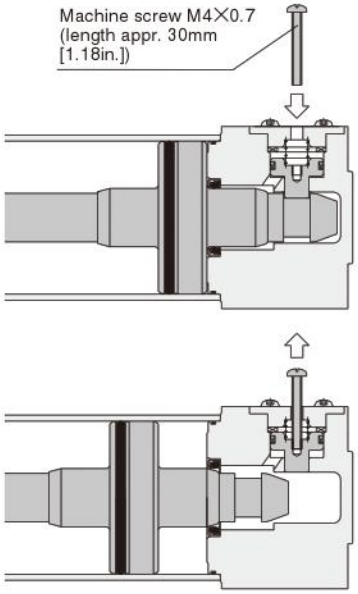


**Cautions:** **1**. It is dangerous to release the lock when load (weight) is present on the piston rod, because it may cause the unintended piston rod's extension (or retraction). In this case, always supply air to the connection port opposite the one adjacent to the locking mechanism before releasing the locking mechanism.
**2**. If the locking mechanism cannot easily be released even with manual override, it could be the result of galling of the lock piston and piston rod. In this case, supply air to the connection port opposite the one adjacent to the locking mechanism before releasing the locking mechanism.
**3**. Because water, oil, dust, etc., intruding through the manual override opening may be a cause of defective locks or other erratic operation. If using in locations subject to dripping water, dripping oil, etc., or large amounts of dust, use a cover to protect the unit.
**4**. If the circuit cannot maintain exhaust pressure at 0.03MPa [4.4psi.] or less due to using a manifold valve, use individual valve for operations.

### Dedicated muffler

The dedicated muffler can be mounted on the manual override opening.
Dedicated muffler model **SA-5** (mm)

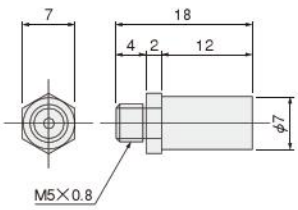


## Control circuit for the end keep cylinder

**1.** For control of the DYNA end keep cylinders, we recommend the use of 2-position, 4-, 5-port valves. Avoid the use of control circuit of ABR connections (exhaust centers) with 3-position valves that exhaust air from 2 ports.
**2.** Always use meter-out control for speed control. Meter-in control may result in failure of the locking mechanism to release.
**3.** Always set the air pressure to 0.15MPa [22psi.] or more.

**Cautions:** **1**. It is dangerous to supply air to a connection port on a side with a locking mechanism while the cylinder has already been exhausted, because the piston rod may suddenly extend (or retract). In addition, since the lock piston could also cause galling of the lock piston and piston rod, resulting in defective operation. Always supply air to the connection port on the opposite side of the locking mechanism to ensure applying back pressure.
**2.** When restarting operations after air has been exhausted from the cylinder due to completion of operations or to an emergency stop, always start by supplying air to a connection port on the opposite side of the locking mechanism.
**3.** Connect the valve port A (NC) to the connection port on the side with the locking mechanism.

## Mounting and piping (for cylinder with brake)

### Operating principle

The cylinder with brake uses a mechanism that consists of steel balls contacting a incline and it receives components of a spring force, then it transmits the force via a brake shoe to apply to the piston rod.

**●When the brake is released**

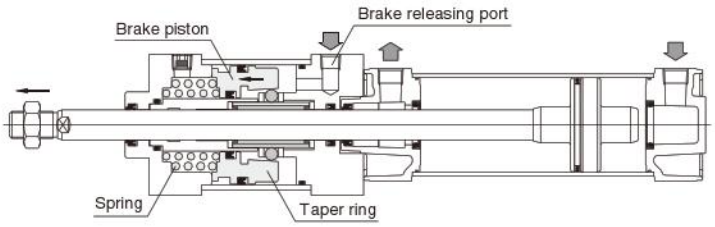


**When the brake is released**

A supply of compressed air from the brake releasing port causes the brake piston including the taper ring, to retract thereby freeing the steel balls from the taper ring, which releases the brake and lets the piston rod freely slide.

**●When the brake is applied**

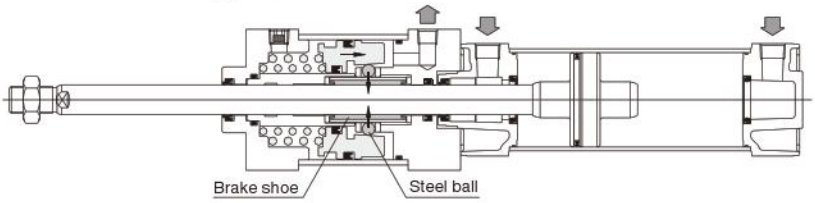


**When the brake is applied**

Exhausting compressed air from the brake releasing port causes the spring to press against the brake piston, transmitting components of spring force via the taper ring to the steel balls, which then works via the brake shoe to transmit a perpendicular force to the piston rod and to apply friction force to the brake.

### Precautions for Installation

1. In the cylinder with brake, the brake piston in the single brake type is secured in place with 2 hexagon socket screws, and in the double brake type with 4 such screws, with the brake set in a released state at shipping.
   When piping and installation is completed, or when performing operation checks, first supply at least 0.35MPa [51psi.] (0.4MPa [58psi.] for bore size of $\phi$ 50 [1.969in.]) of air to the brake release port, and remove the screws. Then exhausting the compressed air enables the piston rod to be held. While the unit could be operated with the screws removed, it is better for prevention of entering dust to use screws with nuts to secure it in place by inserting 2 or 3 thread ridges into the cylinder.
   At this time, do not excessively tighten the screws as they could interfere with the brake piston, by re-locking it in place, or by constricting its movements.
2. Poor centering of the Cylinder with Brake may damage the seal or hasten wear on the brake shoe.
   As poor centering could also result in inaccuracy of the stopping position, use of a cylinder joint is recommended.

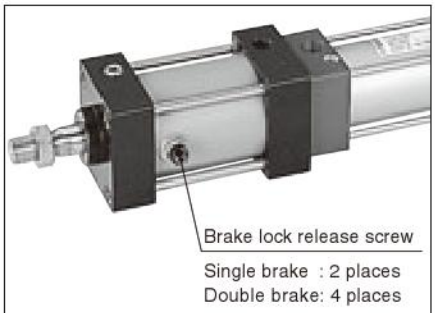


During operation, loosen the brake lock release screw, and set so that it does not bump against the brake piston.

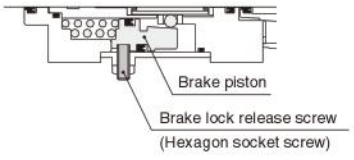

## Mounting and piping (for cylinder with brake)

### Control circuit

**Electric control**

When using a sequencer for control, the scanning time of the sequencer will affect the stopping position error. To improve the stopping position accuracy, use a TTL circuit, etc., to directly control the signal from the cylinder's sensor switch, and operate the valve.

**Pneumatic circuit**

1. To achieve a balance with the load, and a balance of differences in rod diameter area, always use a regulator with check valve.
2. For the cylinder control solenoid valve (V1), use a PAB connection 3-position solenoid valve, etc.
3. Install the solenoid valve for the brake (V2) as close to the cylinder as possible. Moreover, using a DC current solenoid valve will improve response (stopping position accuracy).



**Example of basic circuit** (Reference)

●Horizontal mounting
Spring lock

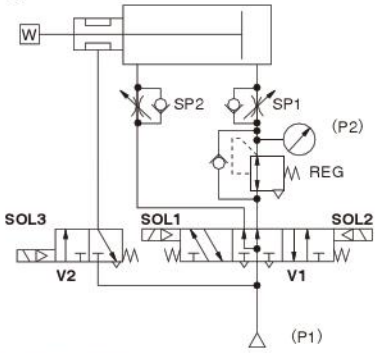


Regulator pressure setting

$$P2=\frac{D^2-d^2}{D^2}\cdot P1$$

D : Cylinder bore size (mm)
d : Rod diameter (mm)
P1: Supply pressure (MPa)

Regulator pressure setting

$$P2'=\frac{D'^2-d'^2}{D'^2}\cdot P1'$$

D' : Cylinder bore size [in.]
d' : Rod diameter [in.]
P1': Supply pressure [psi.]

●Vertical mounting
Spring lock

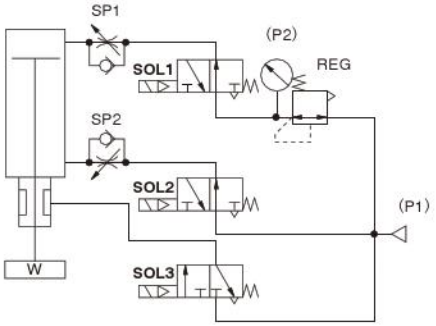


Regulator pressure setting

$$P2=\frac{\pi(D^2-d^2)P1-4W}{\pi\cdot D^2}$$

D : Cylinder bore size (mm)
d : Rod diameter (mm)
P1: Supply pressure (MPa)
W: Load (N)

Regulator pressure setting

$$P2'=\frac{\pi(D'^2-d'^2)P1'-4W'}{\pi\cdot D'^2}$$

D' : Cylinder bore size [in.]
d' : Rod diameter [in.]
P1' : Supply pressure [psi.]
W' : Load [lbf]

●Vertical mounting (push up)

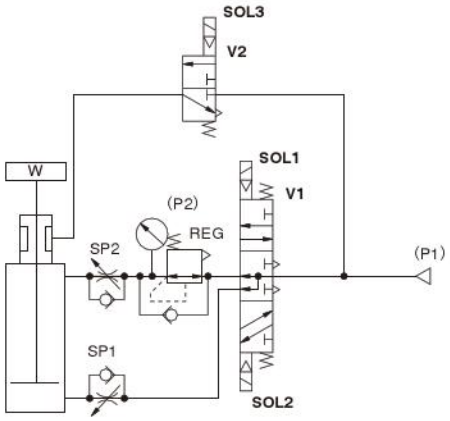


Regulator pressure setting

$$P2=\frac{\pi\cdot D^2\cdot P1-4W}{\pi(D^2-d^2)}$$

D : Cylinder bore size (mm)
d : Rod diameter (mm)
P1: Supply pressure (MPa)
W: Load (N)

Regulator pressure setting

$$P2'=\frac{\pi\cdot D'^2\cdot P1'-4W'}{\pi(D'^2-d'^2)}$$

D' : Cylinder bore size [in.]
d' : Rod diameter [in.]
P1' : Supply pressure [psi.]
W' : Load [lbf]

ON, OFF switch sequence for solenoid
(same for all mounting positions)

| Valve / Operating state | V1 | | V2 |
|---|---|---|---|
| | SOL1 | SOL2 | SOL3 |
| Intermediate stop | OFF | OFF | OFF |
| Forward | OFF | ON | ON |
| Reverse | ON | OFF | ON |

## Air Flow Rate and Air Consumption

While the air cylinder's air flow rate and air consumption can be found through the following calculations, the quick reference chart to the right provides the answers more conveniently.

Air flow rate $Q_1=\frac{\pi D^2}{4}\times L\times\frac{60}{t}\times\frac{P+0.1013}{0.1013}\times10^{-6}$

Air consumption $Q_2=\frac{\pi D^2}{4}\times L\times2\times n\times\frac{P+0.1013}{0.1013}\times10^{-6}$

| | | |
|---|---|---|
| $Q_1$ | : Required air flow rate for cylinder | ℓ /min(ANR) |
| $Q_2$ | : Air consumption of cylinder | ℓ /min(ANR) |
| D | : Cylinder tube inner diameter | mm |
| L | : Cylinder stroke | mm |
| t | : Time required for cylinder to travel 1 stroke | s |
| n | : Number of cylinder reciprocations per minute | times/min |
| P | : Pressure | MPa |

Air flow rate $Q_1'=\frac{\pi D'^2}{4}\times L'\times\frac{60}{t}\times\frac{P'+14.696}{14.696}\times\frac{1}{1728}$

Air consumption $Q_2'=\frac{\pi D'^2}{4}\times L'\times2\times n\times\frac{P'+14.696}{14.696}\times\frac{1}{1728}$

| | | |
|---|---|---|
| $Q_1'$ | : Required air flow rate for cylinder | ft.³/min.(ANR)※ |
| $Q_2'$ | : Air consumption of cylinder | ft.³/min.(ANR)※ |
| D′ | : Cylinder tube inner diameter | in. |
| L′ | : Cylinder stroke | in. |
| t | : Time required for cylinder to travel 1 stroke | sec. |
| n | : Number of cylinder reciprocations per minute | times/min |
| P′ | : Pressure | psi. |

※Refer to p.54 for an explanation of ANR.

### Air consumption for each 1mm [0.0394in.] stroke

cm³ [in.³]/Reciprocation (ANR)

| Bore size mm [in.] | Air pressure MPa [psi.] | | | | | | | | |
|---|---|---|---|---|---|---|---|---|---|
| | 0.1 [15] | 0.2 [29] | 0.3 [44] | 0.4 [58] | 0.5 [73] | 0.6 [87] | 0.7 [102] | 0.8 [116] | 0.9 [131] |
| **32 [1.260]** | 3.20 [0.1953] | 4.78 [0.2917] | 6.37 [0.3887] | 7.96 [0.4856] | 9.55 [0.5826] | 11.14 [0.6796] | 12.72 [0.7762] | 14.31 [0.8733] | 15.90 [0.9703] |
| **40 [1.575]** | 4.99 [0.3045] | 7.48 [0.4565] | 9.96 [0.6078] | 12.44 [0.7591] | 14.92 [0.9105] | 17.40 [1.0618] | 19.88 [1.2132] | 22.36 [1.3645] | 24.84 [1.5158] |
| **50 [1.969]** | 7.80 [0.4760] | 11.68 [0.7128] | 15.56 [0.9495] | 19.43 [1.1857] | 23.31 [1.4225] | 27.19 [1.6592] | 31.06 [1.8954] | 34.93 [2.1316] | 38.78 [2.3665] |
| **63 [2.480]** | 12.39 [0.7561] | 18.54 [1.1314] | 24.70 [1.5073] | 30.85 [1.8826] | 37.01 [2.2585] | 43.16 [2.6338] | 49.32 [3.0097] | 55.46 [3.3844] | 61.57 [3.7572] |
| **80 [3.150]** | 19.98 [1.2193] | 29.90 [1.8246] | 39.83 [2.4306] | 49.75 [3.0359] | 59.67 [3.6413] | 69.60 [4.2473] | 79.52 [4.8526] | 89.45 [5.4586] | 99.37 [6.0640] |
| **100 [3.940]** | 31.21 [1.9046] | 46.72 [2.8510] | 62.23 [3.7975] | 77.73 [4.7434] | 93.24 [5.6899] | 108.75 [6.6364] | 124.25 [7.5822] | 139.76 [8.5287] | 155.27 [9.4752] |
| **125 [4.921]** | 48.77 [2.9761] | 73.00 [4.4548] | 97.23 [5.9334] | 121.46 [7.4120] | 145.69 [8.8906] | 169.92 [10.369] | 194.14 [11.847] | 218.37 [13.326] | 242.60 [14.804] |

The figures in the table show the air flow rate and air consumption when an air cylinder makes 1 reciprocation with stroke of 1mm [0.0394in.]. The air flow rate and consumption actually required is found by the following calculations.

●Finding the air flow rate (for selecting F.R.L., valves, etc.)

Example: When operating an air cylinder with bore size of 40mm [1.575in.] at speed of 300mm/s [11.8in./sec.], and under air pressure of 0.5MPa [73psi.]

$14.92\times\frac{1}{2}\times300\times10^{-3}\fallingdotseq2.24$ ℓ /s [0.0791ft.³/sec.] (ANR)

(At this time, the air flow rate per minute is $14.92\times\frac{1}{2}\times300\times60\times10^{-3}=$ 134.28 ℓ/min [4.74ft.³/min.] (ANR).)

●Finding the air consumption

Example 1. When operating an air cylinder with bore size of 40mm [1.575in.] and stroke of 100mm [3.94in.], and under air pressure of 0.5MPa [73psi.], for 1 reciprocation

$14.92\times100\times10^{-3}=1.492$ ℓ [0.0527ft.³]/Reciprocation (ANR)

Example 2. When operating an air cylinder with bore size of 40mm [1.575in.] and stroke of 100mm [3.94in.], and under air pressure of 0.5MPa [73psi.], for 10 reciprocations per minute

$14.92\times100\times10\times10^{-3}=14.92$ ℓ /min [0.527ft.³/min.] (ANR)

## Cylinder Thrust

Select a suitable cylinder bore size considering the load and air pressure to obtain the required thrust.

Since the figures in the table are calculated values, select a bore size that results in a load ratio (load ratio = $\frac{\text{Load}}{\text{Calculated value}}$ ) of 70% or less (50% or less for high speed application).

N [lbf.]

| Bore size mm [in.] | Rod diameter mm [in.] | Operation | Pressure area mm² [in²] | Air pressure MPa [psi.] | | | | | | | | | |
|---|---|---|---|---|---|---|---|---|---|---|---|---|---|
| | | | | 0.1 [15] | 0.2 [29] | 0.3 [44] | 0.4 [58] | 0.5 [73] | 0.6 [87] | 0.7 [102] | 0.8 [116] | 0.9 [131] | 1 [145] |
| **32 [1.260]** | **12 [0.472]** | Push side | 804 [1.246] | 80 [18.0] | 161 [36.2] | 241 [54.2] | 322 [72.4] | 402 [90.4] | 482 [108] | 563 [127] | 643 [145] | 724 [163] | 804 [181] |
| | | Pull side | 690 [1.070] | 69 [15.5] | 138 [31.0] | 207 [46.5] | 276 [62.0] | 345 [77.6] | 414 [93.1] | 483 [109] | 552 [124] | 621 [140] | 690 [155] |
| **40 [1.575]** | **16 [0.630]** | Push side | 1256 [1.947] | 126 [28.3] | 251 [56.4] | 377 [84.7] | 502 [113] | 628 [141] | 754 [169] | 879 [198] | 1005 [226] | 1130 [254] | 1256 [282] |
| | | Pull side | 1055 [1.635] | 106 [23.8] | 211 [47.4] | 317 [71.3] | 422 [94.9] | 528 [119] | 633 [142] | 739 [166] | 844 [190] | 950 [214] | 1055 [237] |
| **50 [1.969]** | **20 [0.787]** | Push side | 1963 [3.043] | 196 [44.1] | 393 [88.3] | 589 [132] | 785 [176] | 982 [221] | 1178 [265] | 1374 [309] | 1570 [353] | 1767 [397] | 1963 [441] |
| | | Pull side | 1649 [2.556] | 165 [37.1] | 330 [74.2] | 495 [111] | 660 [148] | 825 [185] | 989 [222] | 1154 [259] | 1319 [297] | 1484 [334] | 1649 [371] |
| **63 [2.480]** | **20 [0.787]** | Push side | 3117 [4.831] | 312 [70.1] | 623 [140] | 935 [210] | 1247 [280] | 1559 [350] | 1870 [420] | 2182 [491] | 2494 [561] | 2805 [631] | 3117 [701] |
| | | Pull side | 2803 [4.345] | 280 [62.9] | 561 [126] | 841 [189] | 1121 [252] | 1402 [315] | 1682 [378] | 1962 [380] | 2242 [504] | 2523 [567] | 2803 [630] |
| **80 [3.150]** | **25 [0.984]** | Push side | 5026 [7.790] | 503 [113] | 1005 [226] | 1508 [339] | 2010 [452] | 2513 [565] | 3016 [678] | 3518 [791] | 4021 [904] | 4523 [1017] | 5026 [1130] |
| | | Pull side | 4536 [7.031] | 454 [102] | 907 [204] | 1361 [306] | 1814 [408] | 2268 [510] | 2722 [612] | 3175 [714] | 3629 [816] | 4082 [918] | 4536 [1020] |
| **100 [3.940]** | **30 [1.181]** | Push side | 7853 [12.17] | 785 [176] | 1571 [353] | 2356 [530] | 3141 [706] | 3927 [883] | 4712 [1059] | 5497 [1236] | 6282 [1412] | 7068 [1589] | 7853 [1765] |
| | | Pull side | 7147 [11.08] | 715 [161] | 1429 [321] | 2144 [482] | 2859 [643] | 3574 [803] | 4288 [964] | 5003 [1125] | 5718 [1285] | 6432 [1446] | 7147 [1607] |
| **125 [4.921]** | **35 [1.378]** | Push side | 12271 [19.02] | 1227 [276] | 2454 [552] | 3681 [827] | 4908 [1103] | 6136 [1379] | 7363 [1655] | 8590 [1931] | 9817 [2207] | 11044 [2483] | 12271 [2759] |
| | | Pull side | 11310 [17.53] | 1131 [254] | 2262 [508] | 3393 [763] | 4524 [1017] | 5655 [1251] | 6786 [1525] | 7917 [1780] | 9048 [2034] | 10179 [2288] | 11310 [2542] |

# DYNA NON-ROTATING DOUBLE ROD CYLINDERS

## Symbol

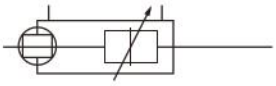

## Specifications

| Item / Bore size mm [in.] | 40 [1.575] | 50 [1.969] | 63 [2.480] | 80 [3.150] | 100 [3.940] |
|---|---|---|---|---|---|
| Operation type | Double acting type | | | | |
| Media | Air | | | | |
| Mounting type | Basic type, Foot type, Axial foot type, Flange type, Trunnion type | | | | |
| Operating pressure range MPa [psi.] | 0.15～1.0 [22～145] | | | | |
| Proof pressure MPa [psi.] | 1.5 [218] | | | | |
| Operating temperature range °C [°F] | —10～70 [14～158] (Freezing prohibited, With sensor is 0～60 [32～140].) | | | | |
| Operating speed range mm/s [in./sec.] | 50～500 [2.0～19.7] | | | | |
| Cushion | Variable cushion at both ends of stroke | | | | |
| Cushion stroke mm [in.] | 16 [0.630] | 20 [0.787] | | 25 [0.984] | |
| Lubrication | Not required (If lubrication is required, use Turbine Oil Class 1 (ISO VG32) or equivalent.) | | | | |
| Non-rotating accuracy | ±1° | ±0.8° | | ±0.5° | |
| Allowable torque N·m [ft·lbf] | 1 [0.74] | 3.4 [2.51] | | 10 [7.38] | |
| Port size Rc | 1/4 | 3/8 | | 1/2 | |

## Bore Size and Stroke

mm

| Bore size | Standard strokes | Maximum available stroke |
|---|---|---|
| 40 | 50, 75, 100, 150, 200, 250, 300, 350, 400, 450, 500 | 500 |
| 50 | | |
| 63 | | |
| 80 | | |
| 100 | | |

Remarks: 1. Stroke tolerance;
Strokes of 250 or less: $^{+1}_{0}$ [$^{+0.039}_{0}$ in.]
Strokes of 251～500: $^{+1.5}_{0}$ [$^{+0.059}_{0}$ in.]
2. For non-standard strokes, consult us.
3. For the maximum available stroke with bellows specification, see p.538.

## Order Codes

**DDA** [ ] [ **50×100** ] – [ ] – [ ] – [ ] – [ ] – [ ] [ ] [ ]

**Bore size × Stroke**

**Types of bellows**
- **JT** —— Nylon tarpaulin (～80°C [176°F])
- **JC** —— Chloroprene (～100°C [212°F])
- **JK** —— Conex (～200°C [392°F])
- **JA** —— Alumix (～250°C [482°F])
- ●Conex is a registered trademark of Teijin, Inc.
- ●The temperatures shown are the bellows' own durable temperatures, and are not temperatures for cylinder use.

**Tube material**
- **Blank** — Standard
- **FT** —— Steel tube specification (Not available for cylinder with magnet.)

**Cylinder specification**
- **DL** —— Non-rotating double rod cylinder
- **DJL** —— Non-rotating double rod cylinder with bellows

**DYNA Cylinder Basic model**

**Mounting type**
- **Blank** — Basic type
- **1** —— Foot mounting type
- **2** —— Axial foot mounting type
- **3** —— Flange mounting type
- **11** —— Trunnion type
- **11-11T** — Trunnion type (with supporting brackets)
- ●Mounting brackets are already assembled at shipping.
- ●Orders for mounting brackets only are also accepted.

**Sensor switch** (For cylinder with magnet)

| | | | | |
|---|---|---|---|---|
| **ZC130** | 2-lead wire | Solid state type | with indicator lamp | DC10～28V |
| **ZC153** | 3-lead wire | Solid state type | with indicator lamp | DC4.5～28V |
| **CS5T** | 2-lead wire | Reed switch type | without indicator lamp | DC5～28V<br>AC85～115V |
| **CS11T** | 2-lead wire | Reed switch type | with indicator lamp | DC10～28V |
| **CS2F** | DIN type | Reed switch type | with indicator lamp | AC85～230V |
| **CS3F** | DIN type | Reed switch type | with indicator lamp | DC10～30V |
| **CS4F** | DIN type | Reed switch type | with indicator lamp | DC10～30V |
| **CS5F** | DIN type | Reed switch type | without indicator lamp | DC3～30V |

- ●For mounting location of sensor switch, see p.534.
- ●**CS□F** comes with a DIN connector. All others are grommet type.
- ●Orders for sensor switches only are also accepted.

**Rod end accessory**
- **Blank** — No rod end accessory
- **Y** —— With Y type knuckle (with pin)
- **I** —— With I type knuckle
- ●Rod end accessory for one side is included at shipping. If required for both sides, order separately. For order code, see p.538.
- ●For the cylinder joint and cylinder rod end, see p.1568.
- ●Orders for rod end accessories only are also accepted.
- ●For dimensions of rod end accessories, see p.537.

**Lead wire length** (Applicable only to **ZC,CS□T** types)
- **A** : 1000mm [39in.]
- **B** : 3000mm [118in.]

**Number of sensor switches**
- **1** —— With 1 sensor switch
- **2** —— With 2 sensor switches
- ⋮ ⋮
- **n** —— With n sensor switches

## Inner Construction and Major Parts

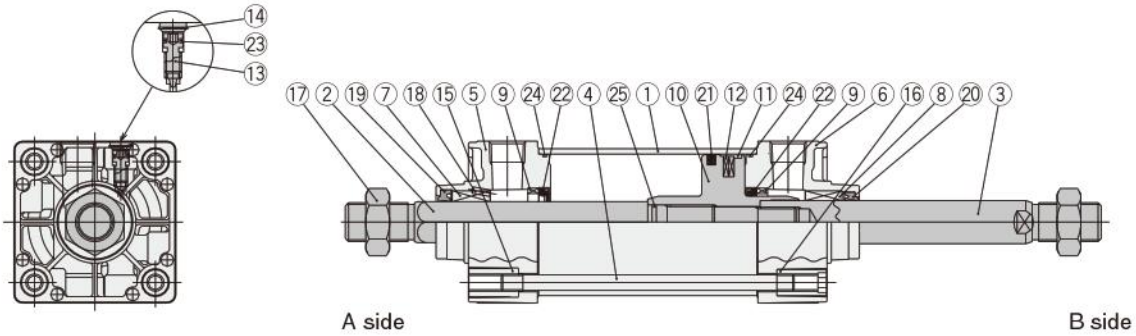


## Major Parts and Materials

| No. | Parts | Materials |
|---|---|---|
| ① | Cylinder tube | Aluminum alloy, and steel tube specification is steel |
| ② | Piston rod A | Carbon steel for machine structural use |
| ③ | Piston rod B | Carbon steel for machine structural use |
| ④ | Tie rod | Carbon steel for machine structural use |
| ⑤ | Rod cover A | Aluminum die-casting |
| ⑥ | Rod cover B | Aluminum die-casting |
| ⑦ | Rod bushing A | Aluminum alloy |
| ⑧ | Rod bushing B | Oil impregnated sintered copper alloy |
| ⑨ | Keep ring | Aluminum alloy |
| ⑩ | Piston | Aluminum alloy |
| ⑪ | Wear ring | Plastic |
| ⑫ | Magnet | Rubber magnet |

| No. | Parts | Materials |
|---|---|---|
| ⑬ | Cushion needle | Carbon steel for machine structural use |
| ⑭ | Snap ring | Spring steel |
| ⑮ | Tie rod nut R | Rolled steel for general structural use |
| ⑯ | Tie rod nut H | Chrome-molybdenum steel |
| ⑰ | Rod end nut | Rolled steel for general structural use |
| ⑱ | Spring pin | Carbon steel for machine structural use |
| ⑲ | Rod seal A | Urethane rubber |
| ⑳ | Rod seal B | Synthetic rubber (NBR) |
| ㉑ | Piston seal | Synthetic rubber (NBR) |
| ㉒ | Cushion seal | Synthetic rubber (NBR) |
| ㉓ | Cushion gasket | Synthetic rubber (NBR) |
| ㉔ | Tube gasket | Synthetic rubber (NBR) |
| ㉕ | Piston gasket | Synthetic rubber (NBR) |

## Seals

| Parts | Rod seal A | Rod seal B | Piston seal | Cushion seal | Tube gasket | Piston gasket | Cushion gasket |
|---|---|---|---|---|---|---|---|
| Bore size mm \ Quantity | 1★ | 1★ | 1★ | 2 | 2★ | 1 | 2 |
| **40** | PGR14A | DRP16 | PWP40N | CPF20 | 1.5×40 | S10 | S5 |
| **50** | PGR19 | DRP20 | PWP50N | CPF24 | 1.5×50 | S14 | S6 |
| **63** | PGR19 | DRP20 | PWP63N | CPF24 | 1.5×63 | S14 | S6 |
| **80** | PGR23 | DRP25 | PWP80N | CPF30 | 1.5×80 | S18 | S6 |
| **100** | PGR23 | DRP30 | PWP100N | CPF35 | 1.5×100 | S18 | S6 |

Remark: Items marked with a star (★) are available as repair kits.
Order codes: For non-rotating double rod cylinders···SRK-NDDADL [Bore size]

## Mass

kg [lb.]

| Bore size mm [in.] | Zero stroke mass | | | | | | Additional mass for each 1mm [0.0394in.] stroke | Mass of 1 sensor switch [w. holder] | | Mass of knuckle | |
|---|---|---|---|---|---|---|---|---|---|---|---|
| | Basic type | Foot mounting type | Axial foot mounting type | Flange mounting type | Trunnion type | Trunnion type (w. supporting bkt.) | | ZC□□□ CS□T type | CS□F | Y type knuckle (with pin) | I type knuckle |
| **40 [1.575]** | 0.84 [1.85] (0.88 [1.94]) | 0.97 [2.14] (1.01 [2.23]) | 1.04 [2.29] (1.08 [2.38]) | 1.21 [2.67] (1.25 [2.76]) | 1.32 [2.91] (1.36 [3.00]) | 1.82 [4.01] (1.86 [4.10]) | 0.00433 [0.00955] (0.00564 [0.01244]) | 0.04 [0.09] | 0.05 [0.11] | 0.27 [0.60] | 0.16 [0.35] |
| **50 [1.969]** | 1.35 [2.98] (1.41 [3.11]) | 1.52 [3.35] (1.58 [3.48]) | 1.67 [3.68] (1.73 [3.81]) | 1.74 [3.84] (1.80 [3.97]) | 1.90 [4.19] (1.96 [4.32]) | 2.40 [5.29] (2.46 [5.42]) | 0.00670 [0.01477] (0.00877 [0.01934]) | | | 0.34 [0.75] | 0.21 [0.46] |
| **63 [2.480]** | 1.86 [4.10] (1.94 [4.28]) | 2.09 [4.61] (2.17 [4.78]) | 2.38 [5.25] (2.46 [5.42]) | 2.39 [5.27] (2.47 [5.45]) | 2.56 [5.64] (2.64 [5.82]) | 3.06 [6.75] (3.14 [6.92]) | 0.00757 [0.01669] (0.01015 [0.02238]) | 0.04 [0.09] | 0.06 [0.13] | 0.34 [0.75] | 0.21 [0.46] |
| **80 [3.150]** | 3.16 [6.97] (3.33 [7.34]) | 3.54 [7.81] (3.71 [8.18]) | 4.01 [8.84] (4.18 [9.22]) | 4.76 [10.50] (4.93 [10.87]) | 4.32 [9.53] (4.49 [9.90]) | 5.04 [11.11] (5.21 [11.49]) | 0.01193 [0.02631] (0.01661 [0.03663]) | | | 0.87 [1.92] | 0.62 [1.37] |
| **100 [3.940]** | 4.22 [9.31] (4.43 [9.77]) | 4.69 [10.34] (4.90 [10.80]) | 5.50 [12.13] (5.71 [12.59]) | 6.44 [14.20] (6.65 [14.66]) | 5.75 [12.68] (5.96 [13.14]) | 6.47 [14.27] (6.68 [14.73]) | 0.01420 [0.03131] (0.02001 [0.04412]) | | | A side 0.87 [1.92] B side 1.47 [3.24] | A side 0.62 [1.37] B side 1.24 [2.73] |

Note: For lead wire length A (1000mm [39in.]).
Remarks: 1. Figures in parentheses ( ) are for steel tube specification.
2. A side=Non-rotating side

Calculation example: For foot mounting type with bore size of 50mm, and stroke of 100mm, 1.52+(0.00670×100)=2.19kg [4.83lb.]

## Dimensions of Basic Type (mm)

**DDADL** Bore size × Stroke

CAD DDADL Bore size

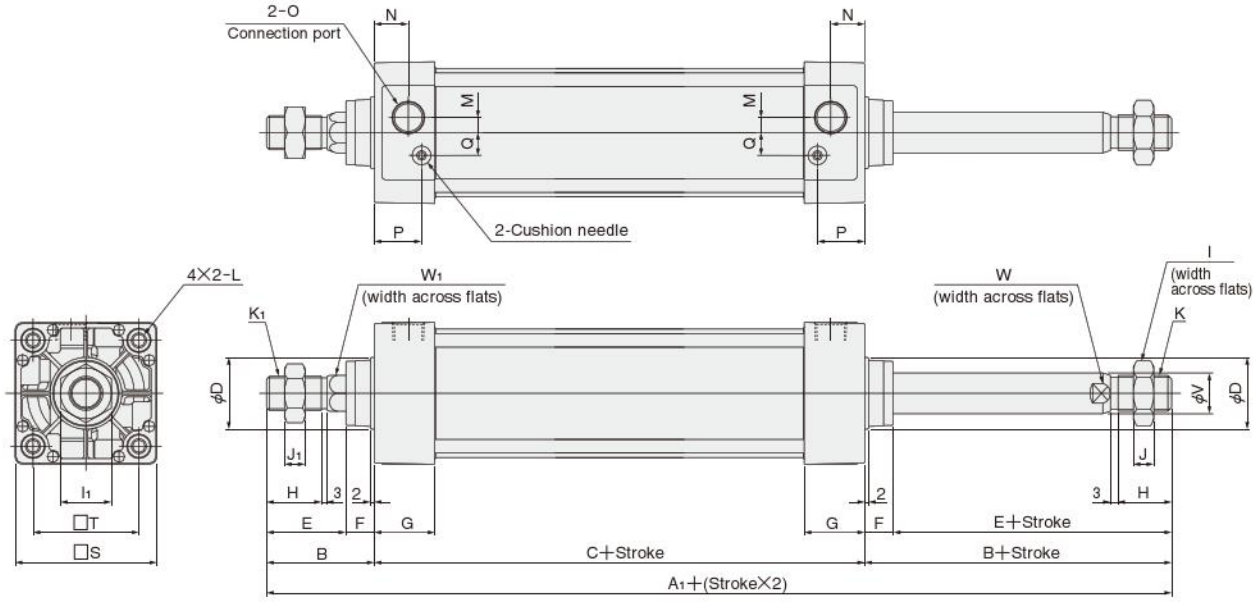


| Bore mm[in] \ Code | $A_1$ | B | C | D | E | F | G | H | I | $I_1$ | J | $J_1$ | K | $K_1$ |
|---|---|---|---|---|---|---|---|---|---|---|---|---|---|---|
| **40 [1.575]** | 191 | 49 | 93 | 32 | 34 | 15 | 31 | 21 | 22 | 19 | 8 | 7 | M14×1.5 | M12×1.25 |
| **50 [1.969]** | 207 | 57 | 93 | 38 | 42 | 15 | 31 | 29 | 27 | 27 | 11 | 11 | M18×1.5 | M18×1.5 |
| **63 [2.480]** | 210 | 57 | 96 | 38 | 42 | 15 | 32 | 29 | 27 | 27 | 11 | 11 | M18×1.5 | M18×1.5 |
| **80 [3.150]** | 258 | 75 | 108 | 44 | 54 | 21 | 36 | 37 | 32 | 32 | 13 | 13 | M22×1.5 | M22×1.5 |
| **100 [3.940]** | 258 | 75 | 108 | 50 | 54 | 21 | 36 | 37 | 36 | 32 | 14 | 13 | M26×1.5 | M22×1.5 |

| Bore mm[in] \ Code | L | M | N | O | P | Q | S | T | V | W | $W_1$ |
|---|---|---|---|---|---|---|---|---|---|---|---|
| **40 [1.575]** | M 6×1 Depth 14 | 4 | 18 | Rc1/4 | 25.5 | 10 | 50 | 37 | 16 | 14 | 14 |
| **50 [1.969]** | M 6×1 Depth 14 | 7 | 18 | Rc3/8 | 24 | 12 | 62 | 47 | 20 | 17 | 19 |
| **63 [2.480]** | M 8×1.25 Depth 14 | 8 | 18 | Rc3/8 | 25 | 12 | 75 | 56 | 20 | 17 | 19 |
| **80 [3.150]** | M10×1.5 Depth 15 | 11 | 20 | Rc1/2 | 29 | 16 | 94 | 70 | 25 | 21 | 23 |
| **100 [3.940]** | M10×1.5 Depth 15 | 12 | 20 | Rc1/2 | 29 | 18 | 112 | 84 | 30 | 26 | 23 |

## Dimensions of Foot Mounting Type (mm)

**DDADL** Bore size × Stroke **-1**

CAD Foot mounting bracket only DDA Bore size -1

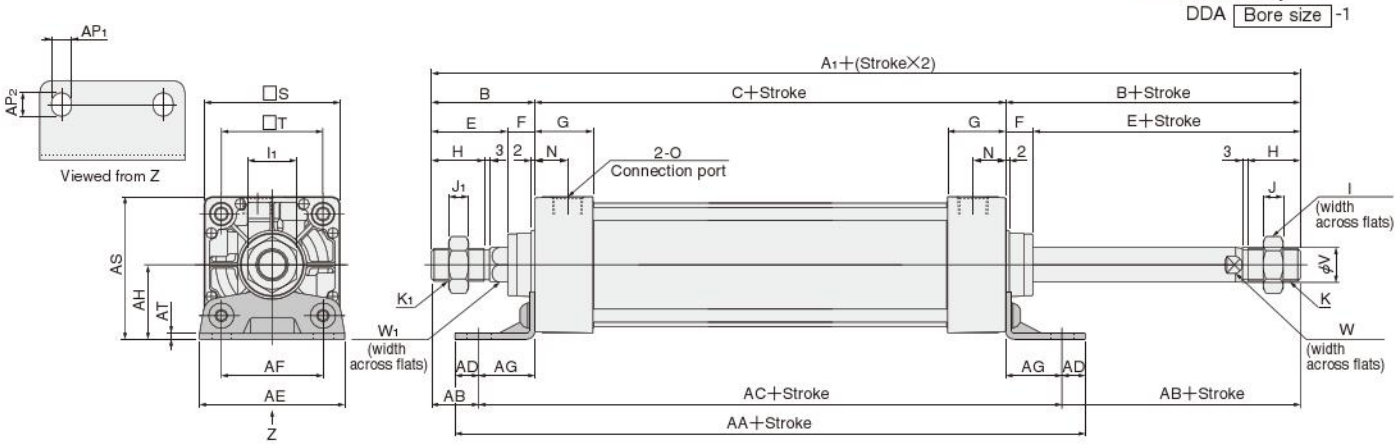


| Bore mm [in.] \ Code | A1 | B | C | E | F | G | H | I | I1 | J | J1 | K | K1 | N | O | S | T | V | W | W1 |
|---|---|---|---|---|---|---|---|---|---|---|---|---|---|---|---|---|---|---|---|---|
| **40 [1.575]** | 191 | 49 | 93 | 34 | 15 | 31 | 21 | 22 | 19 | 8 | 7 | M14X1.5 | M12X1.25 | 18 | Rc1/4 | 50 | 37 | 16 | 14 | 14 |
| **50 [1.969]** | 207 | 57 | 93 | 42 | 15 | 31 | 29 | 27 | 27 | 11 | 11 | M18X1.5 | M18X1.5 | 18 | Rc3/8 | 62 | 47 | 20 | 17 | 19 |
| **63 [2.480]** | 210 | 57 | 96 | 42 | 15 | 32 | 29 | 27 | 27 | 11 | 11 | M18X1.5 | M18X1.5 | 18 | Rc3/8 | 75 | 56 | 20 | 17 | 19 |
| **80 [3.150]** | 258 | 75 | 108 | 54 | 21 | 36 | 37 | 32 | 32 | 13 | 13 | M22X1.5 | M22X1.5 | 20 | Rc1/2 | 94 | 70 | 25 | 21 | 23 |
| **100 [3.940]** | 258 | 75 | 108 | 54 | 21 | 36 | 37 | 36 | 32 | 14 | 13 | M26X1.5 | M22X1.5 | 20 | Rc1/2 | 112 | 84 | 30 | 26 | 23 |

| Bore mm [in.] \ Code | AA | AB | AC | AD | AE | AF | AG | AH | AP1 | AP2 | AS | AT |
|---|---|---|---|---|---|---|---|---|---|---|---|---|
| **40 [1.575]** | 165 | 25.5 | 140 | 12.5 | 57 | 36 | 23.5 | 30 | 11 | 13 | 55 | 3.2 |
| **50 [1.969]** | 173 | 29 | 149 | 12 | 68 | 47 | 28 | 36.5 | 11 | 13 | 67.5 | 3.2 |
| **63 [2.480]** | 184 | 26 | 158 | 13 | 80 | 56 | 31 | 41 | 11 | 13 | 78.5 | 3.2 |
| **80 [3.150]** | 200 | 45 | 168 | 16 | 97 | 70 | 30 | 49 | 14 | 16 | 96 | 4 |
| **100 [3.940]** | 200 | 45 | 168 | 16 | 112 | 84 | 30 | 57 | 14 | 16 | 113 | 4 |

## Dimensions of Axial Foot Mounting Type (mm)

**DDADL** Bore size × Stroke **-2**

CAD Axial foot mounting bracket only DDA Bore size -2

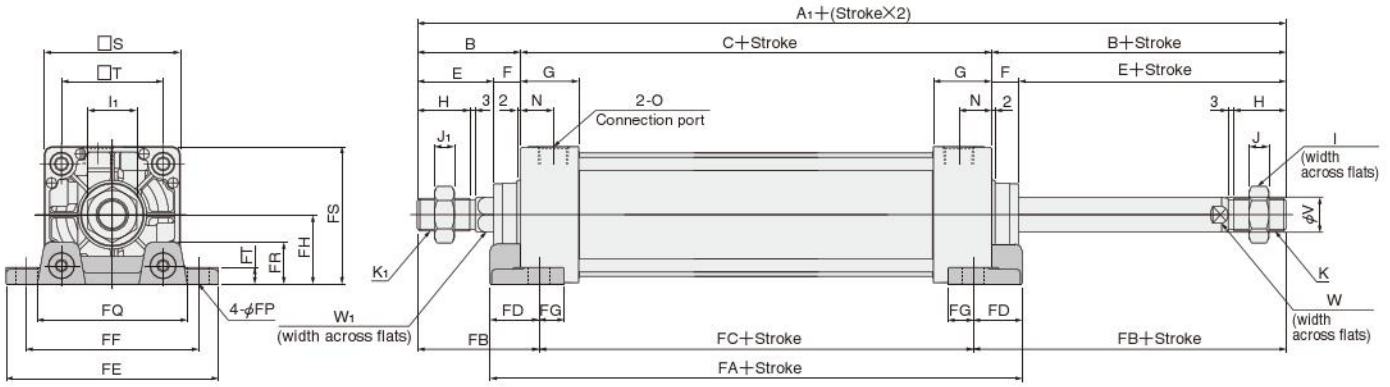


| Bore mm [in.] \ Code | A1 | B | C | E | F | G | H | I | I1 | J | J1 | K | K1 | N | O | S | T | V | W | W1 |
|---|---|---|---|---|---|---|---|---|---|---|---|---|---|---|---|---|---|---|---|---|
| **40 [1.575]** | 191 | 49 | 93 | 34 | 15 | 31 | 21 | 22 | 19 | 8 | 7 | M14X1.5 | M12X1.25 | 18 | Rc1/4 | 50 | 37 | 16 | 14 | 14 |
| **50 [1.969]** | 207 | 57 | 93 | 42 | 15 | 31 | 29 | 27 | 27 | 11 | 11 | M18X1.5 | M18X1.5 | 18 | Rc3/8 | 62 | 47 | 20 | 17 | 19 |
| **63 [2.480]** | 210 | 57 | 96 | 42 | 15 | 32 | 29 | 27 | 27 | 11 | 11 | M18X1.5 | M18X1.5 | 18 | Rc3/8 | 75 | 56 | 20 | 17 | 19 |
| **80 [3.150]** | 258 | 75 | 108 | 54 | 21 | 36 | 37 | 32 | 32 | 13 | 13 | M22X1.5 | M22X1.5 | 20 | Rc1/2 | 94 | 70 | 25 | 21 | 23 |
| **100 [3.940]** | 258 | 75 | 108 | 54 | 21 | 36 | 37 | 36 | 32 | 14 | 13 | M26X1.5 | M22X1.5 | 20 | Rc1/2 | 112 | 84 | 30 | 26 | 23 |

| Bore mm [in.] \ Code | FA | FB | FC | FD | FE | FF | FG | FH | FP | FQ | FR | FS | FT |
|---|---|---|---|---|---|---|---|---|---|---|---|---|---|
| **40 [1.575]** | 119 | 59 | 73 | 23 | 92 | 70 | 14 | 25 | 12 | 58 | 16 | 50 | 8 |
| **50 [1.969]** | 123 | 67 | 73 | 25 | 105 | 83 | 14 | 31 | 12 | 68 | 17 | 62 | 9 |
| **63 [2.480]** | 130 | 67 | 76 | 27 | 117 | 95 | 14 | 38 | 12 | 84 | 22 | 75.5 | 9 |
| **80 [3.150]** | 150 | 88 | 82 | 34 | 147 | 121 | 18 | 47 | 14 | 104 | 28 | 94 | 13 |
| **100 [3.940]** | 158 | 88 | 82 | 38 | 168 | 140 | 18 | 57 | 14 | 120 | 30 | 113 | 14 |

## Dimensions of Flange Mounting Type (mm)

**DDADL** Bore size × Stroke **-3**

CAD Flange mounting bracket only
DDA Bore size -3

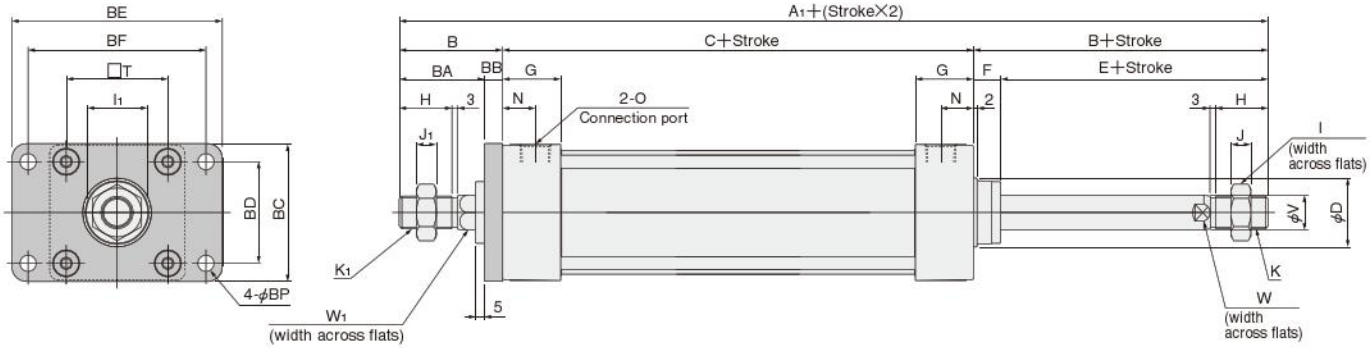


| Bore mm [in.] \ Code | A1 | B | C | D | E | F | G | H | I | I1 | J | J1 | K | K1 | N | O | T | V | W | W1 |
|---|---|---|---|---|---|---|---|---|---|---|---|---|---|---|---|---|---|---|---|---|
| **40 [1.575]** | 191 | 49 | 93 | 32 | 34 | 15 | 31 | 21 | 22 | 19 | 8 | 7 | M14×1.5 | M12×1.25 | 18 | Rc1/4 | 37 | 16 | 14 | 14 |
| **50 [1.969]** | 207 | 57 | 93 | 38 | 42 | 15 | 31 | 29 | 27 | 27 | 11 | 11 | M18×1.5 | M18×1.5 | 18 | Rc3/8 | 47 | 20 | 17 | 19 |
| **63 [2.480]** | 210 | 57 | 96 | 38 | 42 | 15 | 32 | 29 | 27 | 27 | 11 | 11 | M18×1.5 | M18×1.5 | 18 | Rc3/8 | 56 | 20 | 17 | 19 |
| **80 [3.150]** | 258 | 75 | 108 | 44 | 54 | 21 | 36 | 37 | 32 | 32 | 13 | 13 | M22×1.5 | M22×1.5 | 20 | Rc1/2 | 70 | 25 | 21 | 23 |
| **100 [3.940]** | 258 | 75 | 108 | 50 | 54 | 21 | 36 | 37 | 36 | 32 | 14 | 13 | M26×1.5 | M22×1.5 | 20 | Rc1/2 | 84 | 30 | 26 | 23 |

| Bore mm [in.] \ Code | BA | BB | BC | BD | BE | BF | BP |
|---|---|---|---|---|---|---|---|
| **40 [1.575]** | 39 | 10 | 52 | 36 | 84 | 70 | 7 |
| **50 [1.969]** | 47 | 10 | 65 | 47 | 104 | 86 | 9 |
| **63 [2.480]** | 47 | 10 | 76 | 56 | 116 | 98 | 9 |
| **80 [3.150]** | 59 | 16 | 95 | 70 | 143 | 119 | 12 |
| **100 [3.940]** | 59 | 16 | 115 | 84 | 162 | 138 | 12 |

## Dimensions of Trunnion Type (mm)

**DDADL** Bore size × Stroke **-11**

CAD Trunnion bracket only
DDA Bore size -11

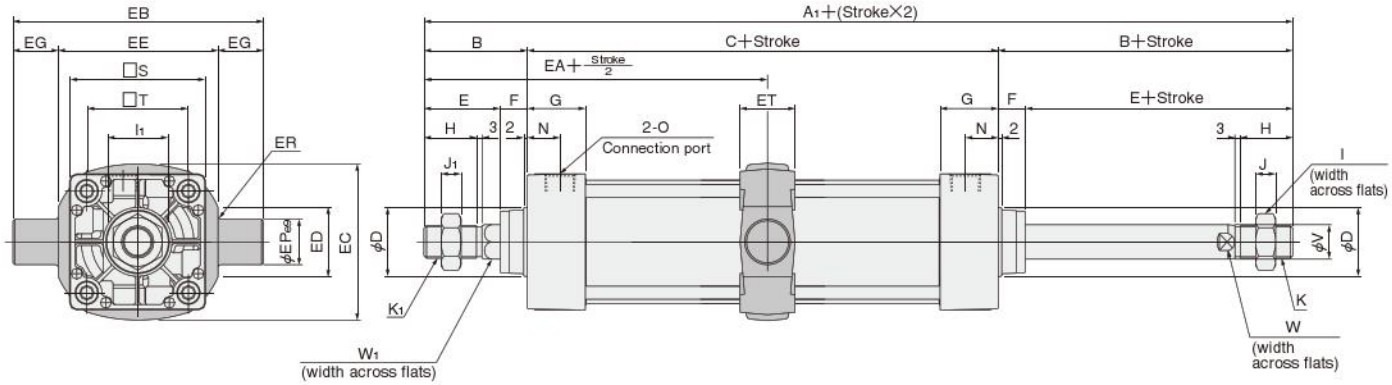


| Code / Bore mm [in.] | A1 | B | C | D | E | F | G | H | I | I1 | J | J1 | K | K1 | N | O | S | T | V | W | W1 |
|---|---|---|---|---|---|---|---|---|---|---|---|---|---|---|---|---|---|---|---|---|---|
| **40 [1.575]** | 191 | 49 | 93 | 32 | 34 | 15 | 31 | 21 | 22 | 19 | 8 | 7 | M14×1.5 | M12×1.25 | 18 | Rc1/4 | 50 | 37 | 16 | 14 | 14 |
| **50 [1.969]** | 207 | 57 | 93 | 38 | 42 | 15 | 31 | 29 | 27 | 27 | 11 | 11 | M18×1.5 | M18×1.5 | 18 | Rc3/8 | 62 | 47 | 20 | 17 | 19 |
| **63 [2.480]** | 210 | 57 | 96 | 38 | 42 | 15 | 32 | 29 | 27 | 27 | 11 | 11 | M18×1.5 | M18×1.5 | 18 | Rc3/8 | 75 | 56 | 20 | 17 | 19 |
| **80 [3.150]** | 258 | 75 | 108 | 44 | 54 | 21 | 36 | 37 | 32 | 32 | 13 | 13 | M22×1.5 | M22×1.5 | 20 | Rc1/2 | 94 | 70 | 25 | 21 | 23 |
| **100 [3.940]** | 258 | 75 | 108 | 50 | 54 | 21 | 36 | 37 | 36 | 32 | 14 | 13 | M26×1.5 | M22×1.5 | 20 | Rc1/2 | 112 | 84 | 30 | 26 | 23 |

| Code / Bore mm [in.] | EA | EB | EC | ED | EE | EG | EP | ER | ET |
|---|---|---|---|---|---|---|---|---|---|
| **40 [1.575]** | 95.5 | 113 | 60 | 30 | 63 | 25 | 25 | R1.6 | 30 |
| **50 [1.969]** | 103.5 | 126 | 72 | 30 | 76 | 25 | 25 | R1.6 | 30 |
| **63 [2.480]** | 105 | 138 | 87 | 40 | 88 | 25 | 25 | R1.6 | 30 |
| **80 [3.150]** | 129 | 164 | 105 | 40 | 114 | 25 | 25 | R1.6 | 35 |
| **100 [3.940]** | 129 | 182 | 129 | 44 | 132 | 25 | 25 | R2 | 40 |

### ●With Supporting Brackets DDADL Bore size × Stroke -11-11T

CAD Trunnion supporting bracket only
DDA Bore size -11T

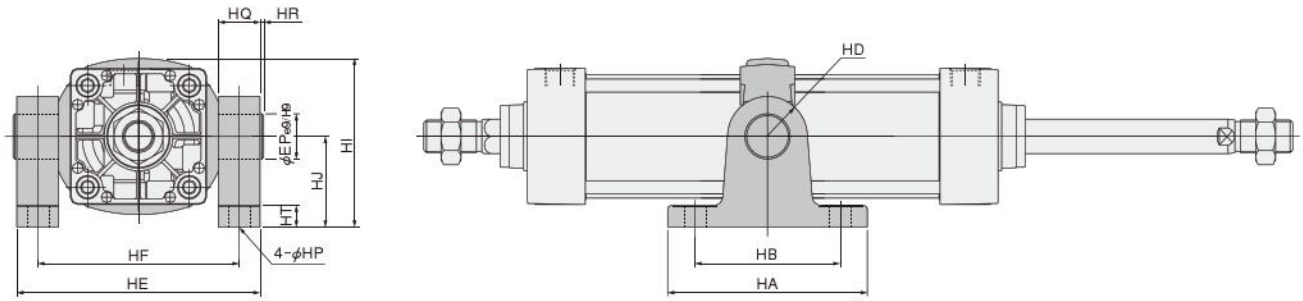


| Code / Bore mm [in.] | HA | HB | HD | HE | HF | HI | HJ | HP | HQ | HR | HT | EP |
|---|---|---|---|---|---|---|---|---|---|---|---|---|
| **40 [1.575]** | 111 | 80 | R22 | 109 | 86 | 80 | 50 | 12(Thru hole) | 23 | 2 | 14 | 25 |
| **50 [1.969]** | 111 | 80 | R22 | 122 | 99 | 86 | 50 | 12(Thru hole) | 23 | 2 | 14 | 25 |
| **63 [2.480]** | 111 | 80 | R22 | 134 | 111 | 93.5 | 50 | 12(Thru hole) | 23 | 2 | 14 | 25 |
| **80 [3.150]** | 121 | 85 | R22 | 160 | 137 | 122.5 | 70 | 14(Thru hole) | 23 | 2 | 14 | 25 |
| **100 [3.940]** | 121 | 85 | R22 | 178 | 155 | 134.5 | 70 | 14(Thru hole) | 23 | 2 | 14 | 25 |

# SENSOR SWITCHES

## Symbol

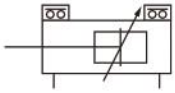

## Order Codes

●Without mounting holder — **ZC130** **A**

●With mounting holder — **ZC130** **A** – **NDDA** **40**

**Sensor switch model**
- **ZC130** — 2-lead wire Solid state type with indicator lamp DC10～28V
- **ZC153** — 3-lead wire Solid state type with indicator lamp DC4.5～28V
- **CS5T** — 2-lead wire Reed switch type without indicator lamp DC5～28V, AC85～115V
- **CS11T** — 2-lead wire Reed switch type with indicator lamp DC10～28V
- **CS2F** — DIN connector Reed switch type with indicator lamp AC85～230V
- **CS3F** — DIN connector Reed switch type with indicator lamp DC10～30V
- **CS4F** — DIN connector Reed switch type with indicator lamp DC10～30V
- **CS5F** — DIN connector Reed switch type without indicator lamp DC3～30V

**Lead wire length**
(Applicable to other than **CS□F** only)
- **A** — 1000mm [39in.]
- **B** — 3000mm [118in.]

**NDDA**: Applicable to other than **CS□F**
**NDF** : Applicable to **CS□F** only

Bore size

●For details of sensor switches, see p.1544.

●**Order codes for mounting holders only**

**C1** – **NDDA** **40**

**Sensor type**
- **C1**: Solid state type for **ZC1□□**
  Reed switch type for **CS□T**
- **DF**: Reed switch type for **CS□F**

**NDDA**: Applicable to other than **CS□F**
**Blank** : For **CS□F**

Bore size
- **32** — For $\phi$ 32 [1.260in.]
- **40** — For $\phi$ 40 [1.575in.]
- **50** — For $\phi$ 50 [1.969in.]
- **63** — For $\phi$ 63 [2.480in.]
- **80** — For $\phi$ 80 [3.150in.]
- **100** — For $\phi$ 100 [3.940in.]
- **125** — For $\phi$ 125 [4.921in.]

## Sensor Switches and Mounting Holders

●DYNA cylinder sensor switches come in 2 types, and 2 corresponding types of mounting holders are available.
See the following for details.

| | |
|---|---|
| Solid state type | **ZC130□□**<br>**ZC153□□** |
| Reed switch type | **CS5T□**<br>**CS11T□** |

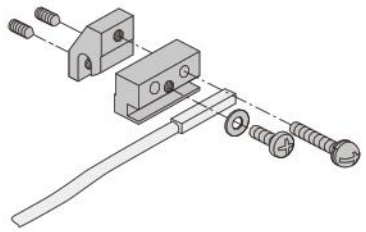

| | |
|---|---|
| DIN connector | **CS2F**<br>**CS3F**<br>**CS4F**<br>**CS5F** |

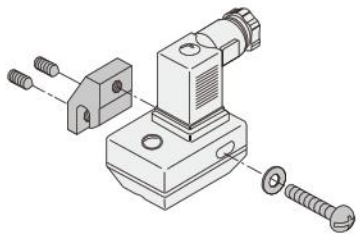

## Minimum Cylinder Strokes When Using Sensor Switches

mm

| Sensor switch model | | Bore size mm [in.] | 2pcs. mounting | | | | 1pc. mounting | |
|---|---|---|---|---|---|---|---|---|
| | | | Mounting 2 pcs. on a tie rod | | Mounting 1 pc. on each tie rod | | Rod side | Head side |
| | | | In a straight line | In staggered positions | 1-plane mounting | 2-plane mounting | | |
| Solid state type | ZC130 ZC153 | **32 [1.260]** | 55 (90) | 15 (90) | 48 (90) | 15 (90) | 15 (90) | 15 (66) |
| | | **40 [1.575]** | 55 (90) | 15 (90) | 48 (90) | 15 (90) | 15 (90) | 15 (66) |
| | | **50 [1.969]** | 55 (90) | 15 (90) | 15 (90) | 15 (90) | 15 (90) | 15 (66) |
| | | **63 [2.480]** | 58 (93) | 15 (93) | 15 (93) | 15 (93) | 15 (93) | 15 (63) |
| | | **80 [3.150]** | 58 (99) | 15 (99) | 15 (99) | 15 (99) | 15 (99) | 15 (69) |
| | | **100 [3.940]** | 58 (99) | 15 (99) | 15 (99) | 15 (99) | 15 (99) | 15 (69) |
| | | **125 [4.921]** | 58 (99) | 15 (99) | 15 (99) | 15 (99) | 15 (99) | 15 (69) |
| Reed switch type | CS5T CS11T | **32 [1.260]** | 55 (90) | 15 (90) | 48 (90) | 15 (90) | 15 (90) | 15 (66) |
| | | **40 [1.575]** | 55 (90) | 15 (90) | 48 (90) | 15 (90) | 15 (90) | 15 (66) |
| | | **50 [1.969]** | 55 (90) | 15 (90) | 15 (90) | 15 (90) | 15 (90) | 15 (66) |
| | | **63 [2.480]** | 58 (93) | 15 (93) | 15 (93) | 15 (93) | 15 (93) | 15 (63) |
| | | **80 [3.150]** | 58 (99) | 15 (99) | 15 (99) | 15 (99) | 15 (99) | 15 (69) |
| | | **100 [3.940]** | 58 (99) | 15 (99) | 15 (99) | 15 (99) | 15 (99) | 15 (69) |
| | | **125 [4.921]** | 58 (99) | 15 (99) | 15 (99) | 15 (99) | 15 (99) | 15 (69) |
| | CS□F | **32 [1.260]** | 55 (93) | 33 (93) | 55 (93) | 25 (93) | 20 (93) | 20 (77) |
| | | **40 [1.575]** | 55 (93) | 33 (93) | 55 (93) | 25 (93) | 20 (93) | 20 (77) |
| | | **50 [1.969]** | 55 (93) | 33 (93) | 55 (93) | 25 (93) | 20 (93) | 20 (77) |
| | | **63 [2.480]** | 55 (96) | 33 (96) | 55 (96) | 25 (96) | 20 (96) | 20 (74) |
| | | **80 [3.150]** | 55 (101) | 33 (101) | 25 (101) | | 20 (101) | 20 (79) |
| | | **100 [3.940]** | 55 (99) | 33 (106) | 25 (106) | | 20 (106) | 20 (84) |
| | | **125 [4.921]** | 55 (99) | 33 (106) | 25 (106) | | 20 (106) | 20 (84) |

Remark: Figures in parentheses ( ) are for trunnion type.

**●When mounting 2 sensors on a tie rod**

**When mounted in a straight line**

**When mounted in staggered positions**

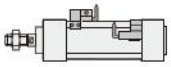

**●When mounting 1 sensor on each tie rod**

**When mounted on 1 plane**

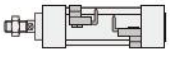

**When mounted on 2 planes**

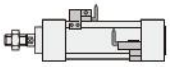

**●1pc. mounting**

**Rod side**

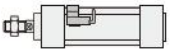

**Head side**

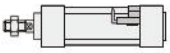

**●Mounting on trunnion type**

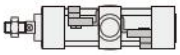

## Sensor Switch Operating Range, Response Differential, and Maximum Sensing Location

### ●ZC1□□type, CS□T type, CS□F type

**●Operating range: ℓ**

The distance the piston travels in one direction, while the switch is in the ON position.

**●Response differential: C**

The distance between the point where the piston turns the switch ON and the point where the switch is turned OFF as the piston travels in the opposite direction.

mm [in.]

| Sensor switches model | Solid state type | Reed switch type | | |
|---|---|---|---|---|
| | ZC130, ZC153 | CS5T | CS11T | CS□F |
| Operating range: ℓ | 2～6 [0.079～0.236] | 6～15 [0.236～0.591] | | |
| Response differential: C | 1.5 [0.059] MAX. | 2.5 [0.098] MAX. | | |
| Maximum sensing location | 8.5 [0.335] | 7 [0.276] | 10.5 [0.413] | 16 [0.630] |

Notes: 1. Figures in the grommet type are lengths measured from the switch's opposite end side to the lead wire, while the figures in connector type are lengths measured from the connector side's end surface.
2. The above table shows reference values.

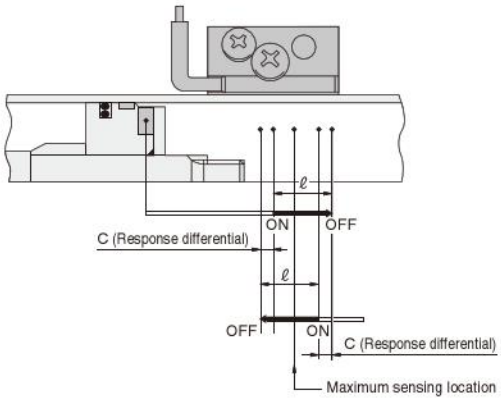


## Mounting Location of Sensor Switch

When the sensor switch is mounted in the locations shown in the diagram (figures in the table are reference values), the magnet comes to the sensor switch's maximum sensing location at the end of the stroke.

### ●Grommet type

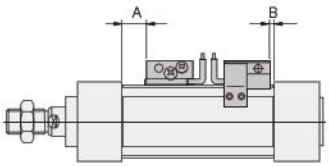


### ●Connector type

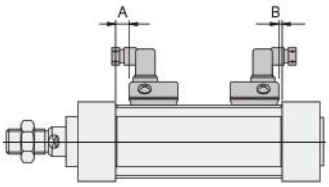


Grommet type enlarged view

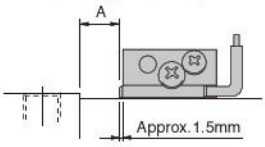


### ●Precaution for mounting

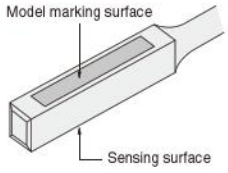


For the ZC type sensor switches, the surface opposite to the model marking surface is the sensing surface side. Mount so that the cylinder magnet comes to the sensing surface side.

### ●Single rod basic type and non-rotating double rod type

mm [in.]

| Sensor switch model | | Bore size / Code | 32 | 40 | 50 | 63 | 80 | 100 | 125 |
|---|---|---|---|---|---|---|---|---|---|
| Solid state type | ZC130 ZC153 | A | 9 [0.354] | 9 [0.354] | 9 [0.354] | 9.5 [0.374] | 12.5 [0.492] | 12.5 [0.492] | 14.5 [0.571] |
| | | B | 5 [0.197] | 5 [0.197] | 5 [0.197] | 5.5 [0.217] | 6.5 [0.256] | 6.5 [0.256] | 10.5 [0.413] |
| Reed switch type | CS5T | A | 10.5 [0.413] | 10.5 [0.413] | 10.5 [0.413] | 11 [0.433] | 14 [0.551] | 14 [0.551] | 16 [0.630] |
| | | B | 6.5 [0.256] | 6.5 [0.256] | 6.5 [0.256] | 7 [0.276] | 8 [0.315] | 8 [0.315] | 12 [0.472] |
| | CS11T | A | 7 [0.276] | 7 [0.276] | 7 [0.276] | 7.5 [0.295] | 10.5 [0.413] | 10.5 [0.413] | 12.5 [0.492] |
| | | B | 3 [0.118] | 3 [0.118] | 3 [0.118] | 3.5 [0.138] | 4.5 [0.177] | 4.5 [0.177] | 8.5 [0.335] |
| | CS□F | A | 3.5 [0.138] | 3.5 [0.138] | 3.5 [0.138] | 4 [0.157] | 7 [0.276] | 7 [0.276] | 9 [0.354] |
| | | B | 0 | 0 | 0 | 0 | 1 [0.039] | 1 [0.039] | 5 [0.197] |

Caution: The reed sensor switch cannot be mounted on the head side in any direction other than that shown in the diagram.

### ●Standard double rod type

mm [in.]

| Sensor switch model | | Bore size / Code | 32 | 40 | 50 | 63 | 80 | 100 | 125 |
|---|---|---|---|---|---|---|---|---|---|
| Solid state type | ZC130 ZC153 | A | 9.5 [0.374] | 9 [0.354] | 9.5 [0.374] | 9.5 [0.374] | 12.5 [0.492] | 12.5 [0.492] | 14.5 [0.571] |
| | | B | 4.5 [0.177] | 5 [0.197] | 4.5 [0.177] | 5.5 [0.217] | 6.5 [0.256] | 6.5 [0.256] | 10.5 [0.413] |
| Reed switch type | CS5T | A | 11 [0.433] | 10.5 [0.413] | 11 [0.433] | 11 [0.433] | 14 [0.551] | 14 [0.551] | 16 [0.630] |
| | | B | 6 [0.236] | 6.5 [0.256] | 6 [0.236] | 7 [0.276] | 8 [0.315] | 8 [0.315] | 12 [0.472] |
| | CS11T | A | 7.5 [0.295] | 7 [0.276] | 7.5 [0.295] | 7.5 [0.295] | 10.5 [0.413] | 10.5 [0.413] | 12.5 [0.492] |
| | | B | 2.5 [0.098] | 3 [0.118] | 2.5 [0.098] | 3.5 [0.138] | 4.5 [0.177] | 4.5 [0.177] | 8.5 [0.335] |
| | CS□F | A | 4 [0.157] | 3.5 [0.138] | 4 [0.157] | 4 [0.157] | 7 [0.276] | 7 [0.276] | 9 [0.354] |
| | | B | 0 | 0 | 0 | 0 | 1 [0.039] | 1 [0.039] | 5 [0.197] |

Caution: The reed sensor switch cannot be mounted on the head side in any direction other than that shown in the diagram.

## ●ZC130, ZC153, CS□T

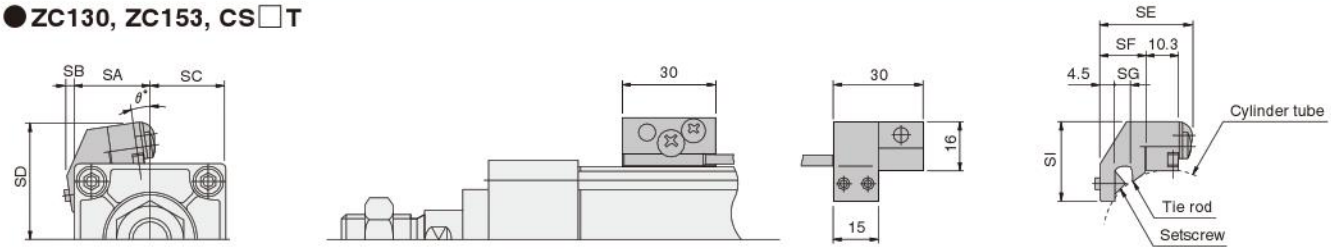


| Bore mm [in.] \ Code | SA | SB | SC | SD | SE | SF | SG | SI | θ |
|---|---|---|---|---|---|---|---|---|---|
| 32 [1.260] | 27 | 5 | 17 | 35 | 29.8 | 15.5 | 6 | 25.5 | 1 |
| 40 [1.575] | 26.1 | 2 | 23.9 | 38.4 | 29.8 | 15.5 | 6 | 25.5 | 10 |
| 50 [1.969] | 27.1 | 0.7 | 34.9 | 43.4 | 29.8 | 15.5 | 6 | 25.5 | 10 |
| 63 [2.480] | 28.3 | 0 | 46.7 | 48.6 | 31.8 | 17.5 | 8 | 24.5 | 18 |
| 80 [3.150] | 30.9 | 0 | 63.1 | 55.9 | 33.3 | 19 | 9.5 | 22.5 | 22 |
| 100 [3.940] | 32.2 | 0 | 79.8 | 63.6 | 33.3 | 19 | 9.5 | 22.5 | 24.5 |
| 125 [4.921] | 36.5 | — | 99.5 | 75 | 37.5 | 24.8 | 11 | 15.5 | 27.5 |

## ●CS□F

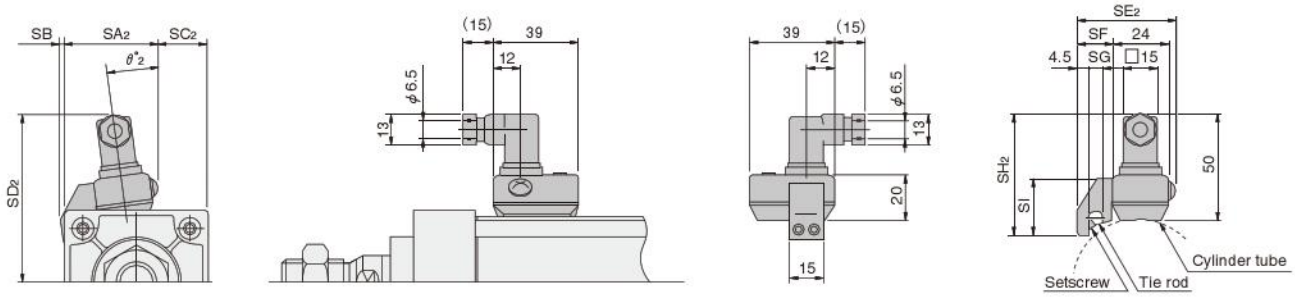


| Bore mm [in.] \ Code | $SA_2$ | SB | $SC_2$ | $SD_2$ | $SE_2$ | SF | SG | $SH_2$ | SI | $\theta_2$ |
|---|---|---|---|---|---|---|---|---|---|---|
| **32 [1.260]** | 41.5 | 5 | 2.5 | 66.5 | 43 | 15.5 | 6 | 56.5 | 25.5 | 2.3 |
| **40 [1.575]** | 33.5 | 1.5 | 16.5 | 70 | 43 | 15.5 | 6 | 56.5 | 25.5 | 12 |
| **50 [1.969]** | 40 | 0.5 | 22 | 74.5 | 43 | 15.5 | 6 | 56.5 | 25.5 | 10 |
| **63 [2.480]** | 40.5 | 0 | 34.5 | 79.5 | 45 | 17.5 | 6 | 55.5 | 24.5 | 19 |
| **80 [3.150]** | 42.5 | — | 51.5 | 86 | 46.5 | 19 | 9.5 | 53.5 | 22.5 | 23 |
| **100 [3.940]** | 44 | — | 68 | 93.5 | 46.5 | 19 | 9.5 | 53.5 | 22.5 | 25 |
| **125 [4.921]** | 49.5 | — | 86.5 | 106.5 | 52.5 | 25 | 11 | 50.5 | 15.5 | 23.5 |

## ZC1□□, CS□T types

Requiring parts for mounting 1 sensor switch on a cylinder

①Sensor Switch
②Washer×1
③Screw (short)×1
④Sensor holder×1
⑤Setscrew×2
⑥Tie rod
⑦Screw (long)×1
⑧Sub-holder×1

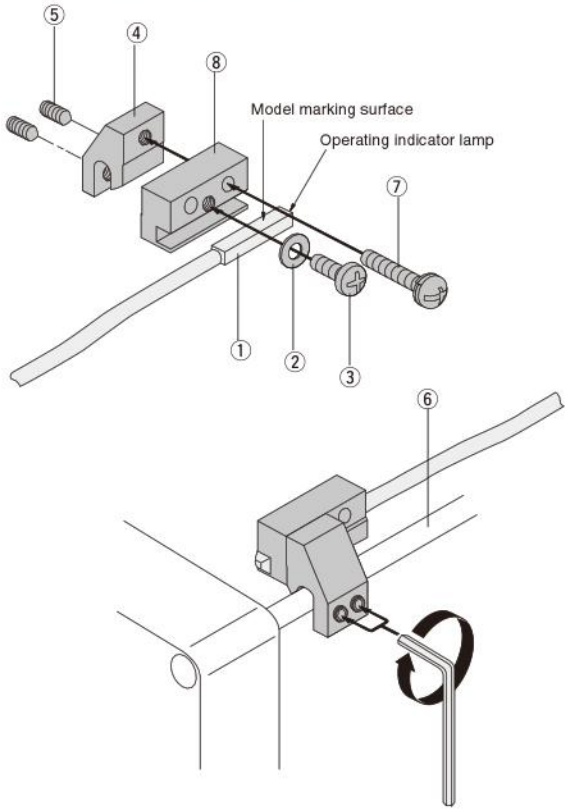


1. ●Align the female thread of sensor holder ④ to the position of the sub-holder ⑧'s thru hole, and use a screw (long) ⑦ to assemble.
   ●Two thru holes are available for ⑧. Either one can be used.
   ●The appropriate tightening torque for ⑦ is 70 N·cm [6.2in·lbf].
2. ●Install the sensor switch ① with the model marking surface facing upward, and fit it on the groove of ⑧.
   ●Align the edges of the body ① and indicator lamp (or the cap) to the end plane of ⑧, and assemble. To protect ①, always assemble so that the body ① does not protrude from the end surface of ⑧.
   ●The appropriate tightening torque for the screw (short) ③ is 70N·cm [6.2in·lbf].
3. ●Two setscrews ⑤ are temporarily fixed ④ in place.
   ●Fit ④ that was assembled with ① and ⑧ onto the tie rod ⑥, and align it to the designated position. Then use an Allen wrench (width across flats B = 2) to tighten ⑤ and secure it in place. Always secure it so that the bottom surface of ⑧ is in contact with the cylinder tube.
   ●The appropriate tightening torque for ⑤ is 70 N·cm [6.2in·lbf].
   ●There are four ⑥s on the cylinder, and ④ can be installed on any of them. In addition, ④ can be fitted in any direction.
   ●Loosening the 2 screws ⑤ allows ④ to be moved freely along ⑥.

## CS□F type

Requiring parts for mounting 1 sensor switch on a cylinder

①Sensor Switch
②Washer×1
③Screw×1
④Sensor holder×1
⑤Setscrew×2
⑥Tie rod

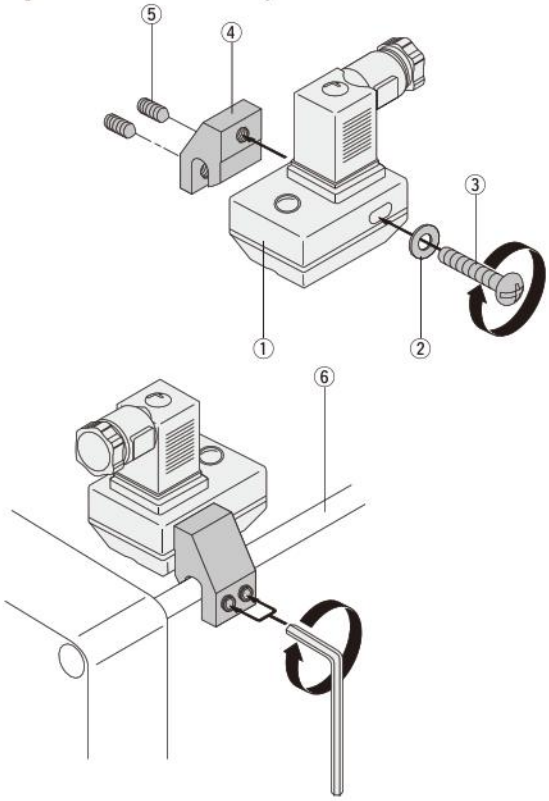


1. ●For the sensor switch ①, align the female thread of sensor holder ④ to any required location of the ①'s thru hole (oval), and assemble.
   ●The appropriate tightening torque for the screw ③ is 70N·cm [6.2in·lbf].
2. ●Use 2 setscrews ⑤ to temporarily fix ④ in place.
   ●Fit ④ that was assembled with ① onto the tie rod ⑥, and align it to the designated position. Then use an Allen wrench (width across flats B = 2) to tighten ⑤ and secure it in place. Always secure it so that the bottom surface of ① is in contact with the cylinder tube.
   ●To detect the head side end of stroke, mount ① so that the connector wiring port faces toward the head cover side, as shown in the diagram to the left.
   ●The appropriate tightening torque for ⑤ is 70N·cm [6.2in·lbf].
   ●There are four ⑥s on the cylinder, and ④ can be installed on any of them. In addition, ④ can be fitted in any direction.
   ●Loosening the 2 screws ⑤ allows ④ to be moved freely along ⑥.

## Dimensions of Knuckle (mm)

### ● Y type

DDA Bore size -Y

$\phi$ 32

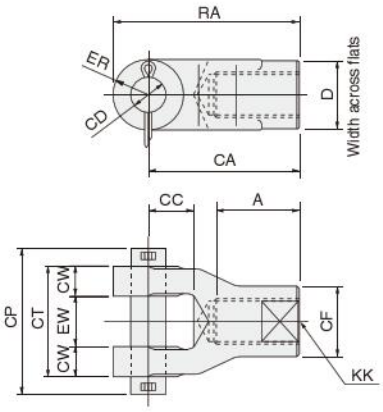


$\phi$ 40～ $\phi$ 125

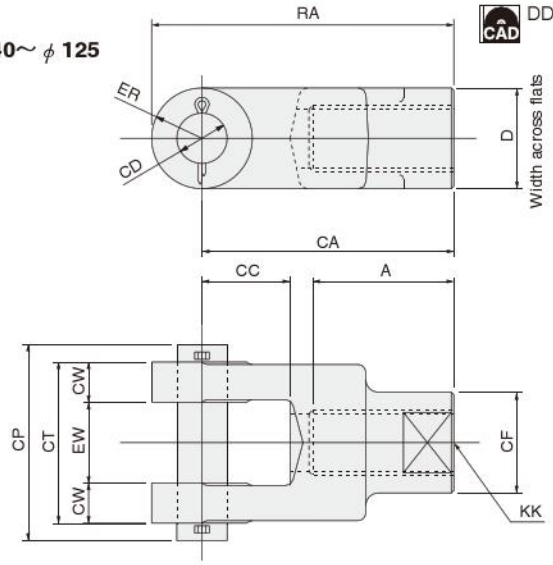


| Bore mm [in.] \ Code | A | CA | CC | CD | CF | CP | CT | CW | D | ER | EW | KK (other than non-rotating) | KK (non-rotating) | RA |
|---|---|---|---|---|---|---|---|---|---|---|---|---|---|---|
| **32 [1.260]** | 23 | 55 | 20 | $\phi$12H9/f8 | $\phi$ 24 | 46 | 32 | 8 | 24 | R12 | 16 $^{+1.5}_{+0.5}$ | M10×1.25 | — | 67 |
| **40 [1.575]** | 18 | 46 | 16 | $\phi$12H9/f8 | $\phi$ 25 | 48 | 36 | 9 | — | R12.5 | 18 $^{+0.4}_{+0.1}$ | M14×1.5 | M12×1.25 | 58.5 |
| **50 [1.969]** | 22 | 46 | 16 | $\phi$12H9/f8 | $\phi$ 25 | 48 | 36 | 9 | — | R12.5 | 18 $^{+0.4}_{+0.1}$ | M18×1.5 | M18×1.5 | 58.5 |
| **63 [2.480]** | 22 | 50 | 20 | $\phi$16H9/f8 | $\phi$ 32 | 56 | 44 | 11 | — | R16 | 22 $^{+0.4}_{+0.1}$ | M18×1.5 | M18×1.5 | 66 |
| **80 [3.150]** | 30 | 75 | 25 | $\phi$20H9/f8 | $\phi$ 40 | 68 | 56 | 14 | — | R20 | 28 $^{+0.4}_{+0.1}$ | M22×1.5 | M22×1.5 | 95 |
| **100 [3.940]** (other than non-rotating) | 34 | 75 | 25 | $\phi$20H9/f8 | $\phi$ 40 | 68 | 56 | 14 | — | R20 | 28 $^{+0.4}_{+0.1}$ | M26×1.5 | — | 95 |
| **100 [3.940]** (non-rotating) | 34 | 75 | 25 | $\phi$20H9/f8 | $\phi$ 40 | 68 | 56 | 14 | — | R20 | 28 $^{+0.4}_{+0.1}$ | — | M22×1.5 | 95 |
| **125 [4.921]** | 56 | 100 | 35 | $\phi$20H9/f8 | $\phi$ 40 | 78 | 64 | 16 | 40 | R20 | 32 $^{+1.5}_{+0.5}$ | M27×2 | — | 120 |

### ● I type

DDA Bore size -I

$\phi$ 32～ $\phi$ 100

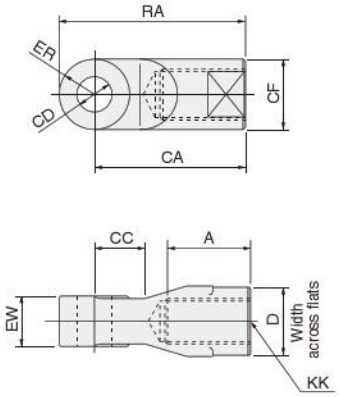


$\phi$ 125

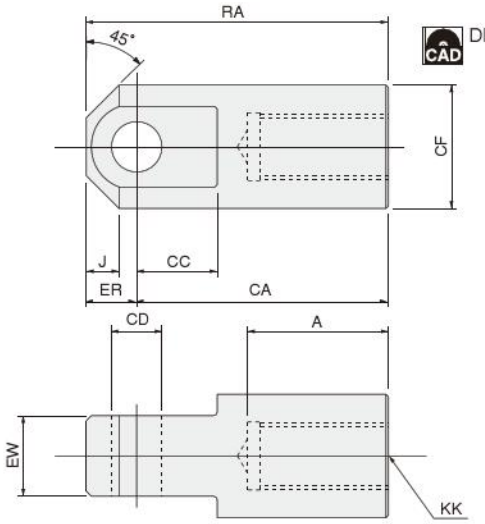


| Bore mm [in.] \ Code | A | CA | CC | CD | CF | D | ER | EW | J | KK (other than non-rotating) | KK (non-rotating) | RA |
|---|---|---|---|---|---|---|---|---|---|---|---|---|
| **32 [1.260]** | 23 | 55 | 20 | $\phi$ 12H9 | $\phi$ 24 | 24 | R12 | 16 $^{0}_{-0.1}$ | — | M10×1.25 | — | 67 |
| **40 [1.575]** | 18 | 46 | 16 | $\phi$ 12H9 | $\phi$ 25 | — | R12.5 | 18 $^{-0.1}_{-0.4}$ | — | M14×1.5 | M12×1.25 | 58.5 |
| **50 [1.969]** | 22 | 46 | 16 | $\phi$ 12H9 | $\phi$ 25 | — | R12.5 | 18 $^{-0.1}_{-0.4}$ | — | M18×1.5 | M18×1.5 | 58.5 |
| **63 [2.480]** | 22 | 50 | 20 | $\phi$ 16H9 | $\phi$ 32 | — | R16 | 22 $^{-0.1}_{-0.4}$ | — | M18×1.5 | M18×1.5 | 66 |
| **80 [3.150]** | 30 | 75 | 25 | $\phi$ 20H9 | $\phi$ 40 | — | R20 | 28 $^{-0.1}_{-0.4}$ | — | M22×1.5 | M22×1.5 | 95 |
| **100 [3.940]** (other than non-rotating) | 34 | 75 | 25 | $\phi$ 20H9 | $\phi$ 40 | — | R20 | 28 $^{-0.1}_{-0.4}$ | — | M26×1.5 | — | 95 |
| **100 [3.940]** (non-rotating) | 34 | 75 | 25 | $\phi$ 20H9 | $\phi$ 40 | — | R20 | 28 $^{-0.1}_{-0.4}$ | — | — | M22×1.5 | 95 |
| **125 [4.921]** | 56 | 100 | 32 | $\phi$ 20H9 | $\phi$ 49 | — | 20 | 32 $^{0}_{-0.1}$ | 13 | M27×2 | — | 120 |

## Dimensions of Bellows (mm [in.])

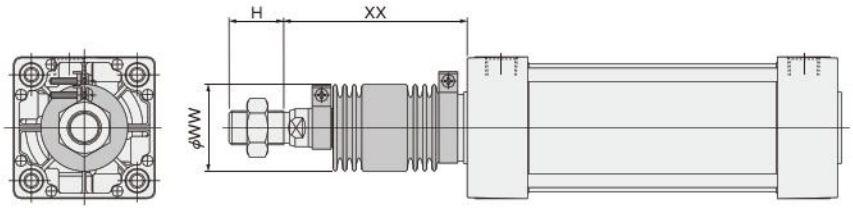


| Code / Bore size mm [in.] | WW | | | | XX | | | | H |
|---|---|---|---|---|---|---|---|---|---|
| | Nylon tarpaulin | Chloroprene | Conex | Alumix | Nylon tarpaulin | Chloroprene | Conex | Alumix | |
| **32 [1.260]** | 36 [1.42] | 36 [1.42] | 61 [2.40] | 36 [1.42] | 1/3 stroke＋48 [1.89] | 1/3 stroke＋48 [1.89] | 1/2 stroke＋48 [1.89] | 1/2 stroke＋48 [1.89] | 19 [0.75] |
| **40 [1.575]** | 41 [1.61] | 41 [1.61] | 61 [2.40] | 41 [1.61] | | | | | 21 [0.83] |
| **50 [1.969]** | 47 [1.85] | 47 [1.85] | 61 [2.40] | 47 [1.85] | 1/3 stroke＋53 [2.09] | 1/3 stroke＋53 [2.09] | 1/2 stroke＋53 [2.09] | 1/2 stroke＋53 [2.09] | 29 [1.14] |
| **63 [2.480]** | 47 [1.85] | 47 [1.85] | 61 [2.40] | 47 [1.85] | | | | | 29 [1.14] |
| **80 [3.150]** | 56 [2.20] | 56 [2.20] | 61 [2.40] | 56 [2.20] | 1/4 stroke＋58 [2.28] | 1/4 stroke＋58 [2.28] | 2/5 stroke＋58 [2.28] | 2/5 stroke＋58 [2.28] | 37 [1.46] |
| **100 [3.940]** | 61 [2.40] | 61 [2.40] | 61 [2.40] | 61 [2.40] | | | | | 37 [1.46] |
| **125 [4.921]** | 71 [2.80] | 71 [2.80] | 71 [2.80] | 71 [2.80] | 1/4 stroke＋59 [2.32] | 1/4 stroke＋59 [2.32] | 2/5 stroke＋59 [2.32] | 2/5 stroke＋59 [2.32] | 50 [1.97] |

### ●Bellows Specifications

| Type / Specifications | Contents | Heat resistant temperature °C [°F] |
|---|---|---|
| Nylon tarpaulin (standard) | Coating vinyle to nylon cloth | 80 [176] |
| Chloroprene | Coating chloroprene to nylon cloth | 100 [212] |
| Conex | Coating silicone to Conex cloth (no use of asbestos) | 200 [392] |
| Alumix | Coating aluminum foil to asbestos cloth | 250 [482] |

Note: The temperatures shown are the bellows' own durable temperatures, and are not temperatures for cylinder use.

## Order Codes of Mounting Brackets and Knuckles

### ●Mounting bracket

□ – □ □

**Cylinder type**
**NDDA** — DYNA cylinder
**NDDAR** — DYNA cylinder with brake
**NDDAE** — DYNA pull side stroke adjusting cylinder
**NDDAP** — DYNA push side stroke adjusting cylinder

**Bore size**
**32** — For φ 32 [1.260in.]
**40** — For φ 40 [1.575in.]
**50** — For φ 50 [1.969in.]
**63** — For φ 63 [2.480in.]
**80** — For φ 80 [3.150in.]
**100** — For φ 100 [3.940in.]
**125** — For φ 125 [4.921in.]

**Mounting bracket**
**1** — Foot mounting type (One set of 2 units)
**2** — Axial foot mounting type (One set of 2 units)
**3** — Rod side flange mounting type Note
**5** — Head side flange mounting type
**7** — Clevis mounting type (with pin)
**7-7C** — Clevis mounting type (with supporting bracket)
**8** — Pivot mounting type
**11** — Trunnion type
**11-11T** — Trunnion type (with supporting brackets)

Note: The rod side flange cannot be retrofitted with the bellows type .

### ●Y, I type knuckle

□ – □ □

**Cylinder type**
**NDDA** — DYNA cylinder
**NDDAL** — DYNA non-rotating cylinder

**Knuckles**
**Y** — Y type knuckle
**I** — I type knuckle

●For dimensions of knuckle, see p.537.

**Bore size**
**32** — For φ 32 [1.260in.]
**40** — For φ 40 [1.575in.]
**50** — For φ 50 [1.969in.]
**63** — For φ 63 [2.480in.]
**80** — For φ 80 [3.150in.]
**100** — For φ 100 [3.940in.]
**125** — For φ 125 [4.921in.]

## Maximum Available Stroke of Cylinder with Bellows

mm [in.]

| Bellows model / Bore size | φ 32 [1.260]～φ 63 [2.480] | φ 80 [3.150]～φ 125 [4.921] |
|---|---|---|
| **JT** | Maximum available St×3／4–50 | Maximum available St×4／5–50 |
| **JC** | Maximum available St×3／4–50 | Maximum available St×4／5–50 |
| **JK** | Maximum available St×2／3–50 | Maximum available St×2／3–50 |
| **JA** | Maximum available St×2／3–50 | Maximum available St×2／3–50 |