DYNA CYLINDERS

Ultra-reliable, high-function tie-rod cylinder

The DYNA cylinders, compact and lightweight mid-sized actuators compatible with ISO standards, offer a wide range of configurations and mounting types to meet various application requirements in a flexible manner. Moreover, the use of a new type of cushion needle and floating seal have made these products user-friendlier.

Light & Compact

Product Line Up

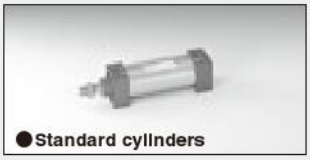
●Standard cylinders

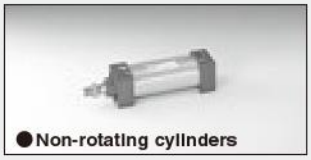
●Non-rotating cylinders

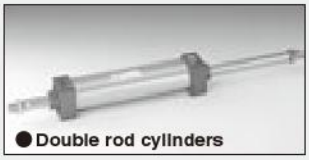
●Double rod cylinders

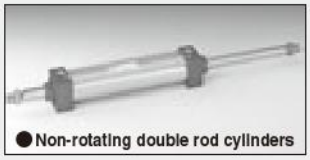
●Non-rotating double rod cylinders

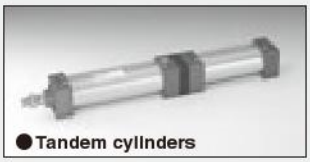
●Tandem cylinders

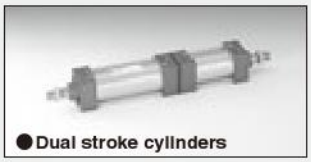
●Dual stroke cylinders

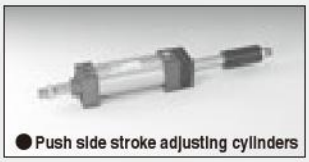
●Push side stroke adjusting cylinders

●Pull side stroke adjusting cylinders

●Low hydraulic cylinders

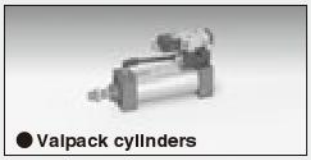
●Valpack cylinders

●End keep cylinders

●Cylinders with brakes

Mounting type

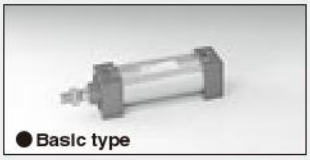
●Basic type

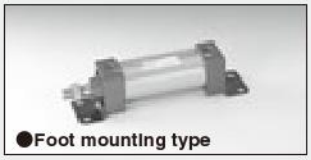
●Foot mounting type

●Axial foot mounting type

●Rod side flange mounting type

●Head side flange mounting type

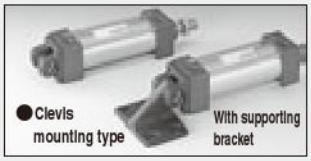
●Clevis mounting type
With supporting bracket

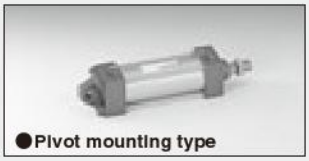
●Pivot mounting type

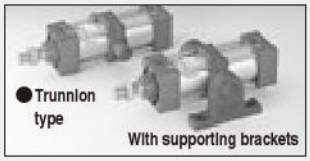
●Trunnion type
With supporting brackets

Accessory

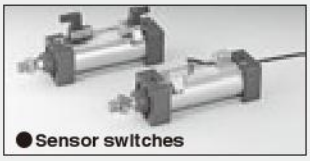
●Sensor switches

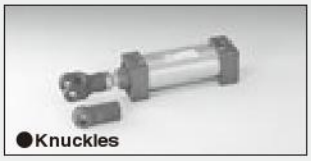
●Knuckles

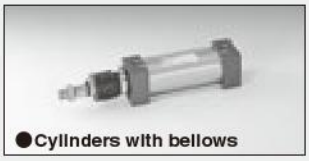
●Cylinders with bellows

1 Extensive variation of functions

■ **The series configuration together with its versatile functionality and specifications offers the best match for various mechanical devices.**

2 Improved cushioning

■ **Improved cushioning is gained by utilizing floating seal in the cushion section.**

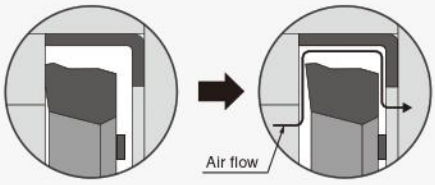

3 Long life

■ **Oil impregnated sintered copper alloy in bushings enables stable operation and longer life.**

4 New cushion needle

■ **Using a new type of cushion needle that is completely embedded in the cylinder body offers fine adjustment for better performance.**

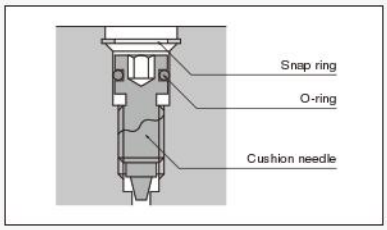

5 Safe self-locking mechanism

■ **New release of cylinders with brakes. Exhausting compressed air pushes a brake shoe against the piston rod thereby stopping the cylinder.**

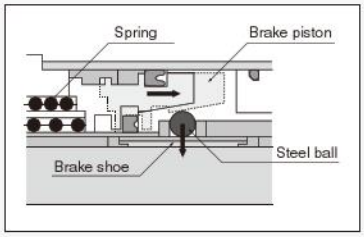

※Steel balls and a brake shoe are secured in position. Operating the brake piston enables activation or release of the brake.

■Series configurations

	Basic type	Foot mounting type	Axial foot mounting type	Rod side flange mounting type	Head side flange mounting type	Clevis mounting type (with supporting bracket)	Pivot mounting type	Trunnion type (with supporting brackets)
Standard cylinder (ϕ32 [1.260]~ϕ125 [4.921])	●	●	●	●	●	●	●	●
Non-rotating cylinder (ϕ40 [1.575]~ϕ100 [3.940])	○	○	○	○	○	○	○	○
Double rod cylinder (ϕ32 [1.260]~ϕ125 [4.921])	●	●	●	●				●
Non-rotating double rod cylinder (ϕ40 [1.575]~ϕ100 [3.940])	○	○	○	○				○
Tandem cylinder (ϕ40 [1.575]~ϕ100 [3.940])	●	●	●	●	●	●	●	●
Dual stroke cylinder (ϕ40 [1.575]~ϕ100 [3.940])	○	○	○	○				○
Push side stroke adjusting cylinder (ϕ40 [1.575]~ϕ100 [3.940])	●	●	●	●				●
Pull side stroke adjusting cylinder (ϕ40 [1.575]~ϕ100 [3.940])	○	○	○	○				○
Low hydraulic cylinder (ϕ32 [1.260]~ϕ100 [3.940])	●	●	●	●	●	●	●	●
Valpack cylinder (ϕ40 [1.575]~ϕ100 [3.940])	○	○	○	○	○	○	○	○
End keep cylinder (ϕ40 [1.575]~ϕ100 [3.940])	●	●	●	●	●	●	●	●
Cylinder with brake (ϕ40 [1.575]~ϕ100 [3.940])	○	○	○	○	○	○	○	

mm [in.]

General precautions

Media

1. Use air for the media. For the use of any other media, consult us.
2. Air used for the DYNA cylinder should be clean air that contains no deteriorated compressor oil, water, dust, etc. Install an air filter (filtration of a minimum 40 μm) near the cylinder or valve to remove collected liquid or dust. In addition, drain the air filter periodically.

Piping

Always thoroughly blow off (use compressed air) the tubing before connecting it to the DYNA cylinder. Entering chips, sealing tape, rust, etc., generated during piping work could result in air leaks or other defective operation.

Atmosphere

If using in locations subject to dripping water, dripping oil, etc., or to large amounts of dust, use a cover to protect the unit.

Lubrication

This equipment can be used without lubrication. If lubrication is required, use Turbine Oil Class 1 (ISO VG32) or lithium soap-based grease No.2 or equivalent.

Handling

Assembly of mounting bracket

Use mounting screws which are supplied with the bracket to assemble the mounting bracket. Use an Allen wrench to tighten the mounting screws evenly. When 4 screws are used, tighten diagonally from each corner. The tightening torque is shown below.

Assembly and disassembly

For disassembly, insert an Allen wrench to loosen the tie rod nut, and remove the cover.
For assembly, screw in the tie rod nut with the hexagon socket facing outward. Evenly tighten diagonally from each corner. The tightening torque is shown below.

〈Tightening torque of mounting brackets and tie rod nuts〉

Bore size mm [in.]	Tightening torque
32, 40, 50 [1.260, 1.575, 1.969]	4.81N·m [3.55ft·lbf]
63 [2.480]	12.0N·m [8.85ft·lbf]
80, 100 [3.150, 3.940]	24.0N·m [17.7ft·lbf]
125 [4.921]	42.2N·m [31.1ft·lbf]

●Width across flats of hexagon socket mm [in.]

Bore size	Tie rod nut	Mounting bracket
32 [1.260]	6 [0.236]	4 [0.157]
40, 50 [1.575, 1.969]	6 [0.236]	4 [0.157]
63 [2.480]	8 [0.315]	5 [0.197]
80, 100 [3.150, 3.940]	10 [0.394]	6 [0.236]
125 [4.921]	12 [0.472]	8 [0.315]

● ϕ 32 [1.260in.]

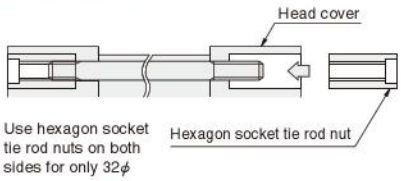

● ϕ 40 [1.575in.]～ϕ 125 [4.921in.]

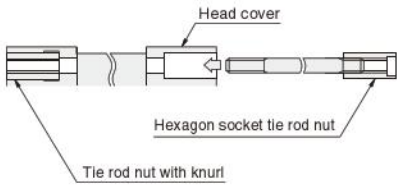

Manual operation of end keep cylinder locking mechanism

While the locking mechanism is normally released automatically through cylinder operations, it can also be released manually. For manual release, insert an M4×0.7 screw that has 30mm [1.18in.] screw length into the manual override opening, thread it in about 3 turns into the internal lock piston, and then pull up the screw. To maintain the manual override for adjustment, etc., thread the locknut onto the screw and, with the locking mechanism in a released state, tighten the locknut against the cylinder.

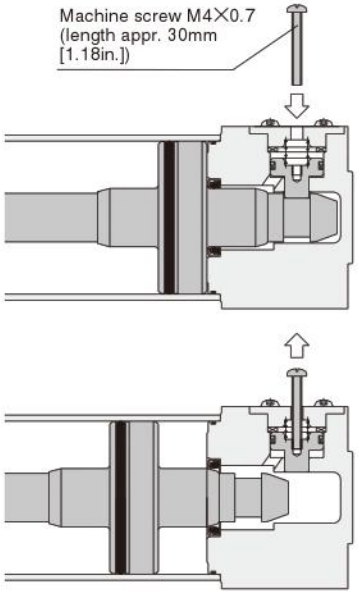

Cautions: **1**. It is dangerous to release the lock when load (weight) is present on the piston rod, because it may cause the unintended piston rod's extension (or retraction). In this case, always supply air to the connection port opposite the one adjacent to the locking mechanism before releasing the locking mechanism.
2. If the locking mechanism cannot easily be released even with manual override, it could be the result of galling of the lock piston and piston rod. In this case, supply air to the connection port opposite the one adjacent to the locking mechanism before releasing the locking mechanism.
3. Because water, oil, dust, etc., intruding through the manual override opening may be a cause of defective locks or other erratic operation. If using in locations subject to dripping water, dripping oil, etc., or large amounts of dust, use a cover to protect the unit.
4. If the circuit cannot maintain exhaust pressure at 0.03MPa [4.4psi.] or less due to using a manifold valve, use individual valve for operations.

Dedicated muffler

The dedicated muffler can be mounted on the manual override opening.
Dedicated muffler model **SA-5** (mm)

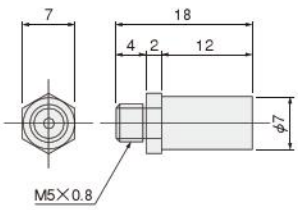

Control circuit for the end keep cylinder

1. For control of the DYNA end keep cylinders, we recommend the use of 2-position, 4-, 5-port valves. Avoid the use of control circuit of ABR connections (exhaust centers) with 3-position valves that exhaust air from 2 ports.
2. Always use meter-out control for speed control. Meter-in control may result in failure of the locking mechanism to release.
3. Always set the air pressure to 0.15MPa [22psi.] or more.

Cautions: **1**. It is dangerous to supply air to a connection port on a side with a locking mechanism while the cylinder has already been exhausted, because the piston rod may suddenly extend (or retract). In addition, since the lock piston could also cause galling of the lock piston and piston rod, resulting in defective operation. Always supply air to the connection port on the opposite side of the locking mechanism to ensure applying back pressure.
2. When restarting operations after air has been exhausted from the cylinder due to completion of operations or to an emergency stop, always start by supplying air to a connection port on the opposite side of the locking mechanism.
3. Connect the valve port A (NC) to the connection port on the side with the locking mechanism.

Mounting and piping (for cylinder with brake)

Operating principle

The cylinder with brake uses a mechanism that consists of steel balls contacting a incline and it receives components of a spring force, then it transmits the force via a brake shoe to apply to the piston rod.

●When the brake is released

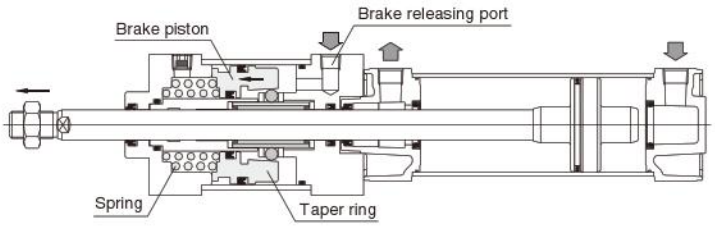

When the brake is released

A supply of compressed air from the brake releasing port causes the brake piston including the taper ring, to retract thereby freeing the steel balls from the taper ring, which releases the brake and lets the piston rod freely slide.

●When the brake is applied

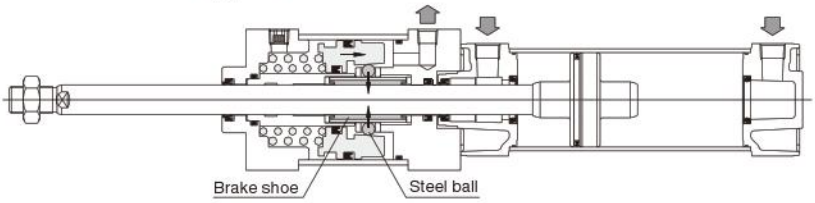

When the brake is applied

Exhausting compressed air from the brake releasing port causes the spring to press against the brake piston, transmitting components of spring force via the taper ring to the steel balls, which then works via the brake shoe to transmit a perpendicular force to the piston rod and to apply friction force to the brake.

Precautions for Installation

1. In the cylinder with brake, the brake piston in the single brake type is secured in place with 2 hexagon socket screws, and in the double brake type with 4 such screws, with the brake set in a released state at shipping.
   When piping and installation is completed, or when performing operation checks, first supply at least 0.35MPa [51psi.] (0.4MPa [58psi.] for bore size of ϕ 50 [1.969in.]) of air to the brake release port, and remove the screws. Then exhausting the compressed air enables the piston rod to be held. While the unit could be operated with the screws removed, it is better for prevention of entering dust to use screws with nuts to secure it in place by inserting 2 or 3 thread ridges into the cylinder.
   At this time, do not excessively tighten the screws as they could interfere with the brake piston, by re-locking it in place, or by constricting its movements.
2. Poor centering of the Cylinder with Brake may damage the seal or hasten wear on the brake shoe.
   As poor centering could also result in inaccuracy of the stopping position, use of a cylinder joint is recommended.

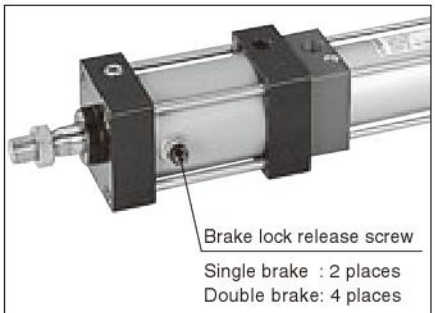

During operation, loosen the brake lock release screw, and set so that it does not bump against the brake piston.

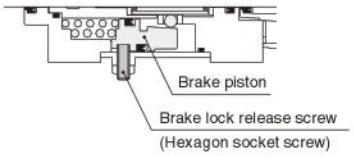

Mounting and piping (for cylinder with brake)

Control circuit

Electric control

When using a sequencer for control, the scanning time of the sequencer will affect the stopping position error. To improve the stopping position accuracy, use a TTL circuit, etc., to directly control the signal from the cylinder's sensor switch, and operate the valve.

Pneumatic circuit

1. To achieve a balance with the load, and a balance of differences in rod diameter area, always use a regulator with check valve.
2. For the cylinder control solenoid valve (V1), use a PAB connection 3-position solenoid valve, etc.
3. Install the solenoid valve for the brake (V2) as close to the cylinder as possible. Moreover, using a DC current solenoid valve will improve response (stopping position accuracy).

Example of basic circuit (Reference)

●Horizontal mounting
Spring lock

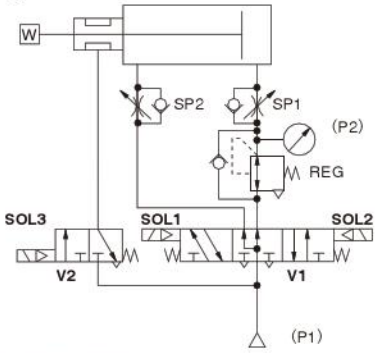

Regulator pressure setting

$$P2=\frac{D^2-d^2}{D^2}\cdot P1$$

D : Cylinder bore size (mm)
d : Rod diameter (mm)
P1: Supply pressure (MPa)

Regulator pressure setting

$$P2'=\frac{D'^2-d'^2}{D'^2}\cdot P1'$$

D' : Cylinder bore size [in.]
d' : Rod diameter [in.]
P1': Supply pressure [psi.]

●Vertical mounting
Spring lock

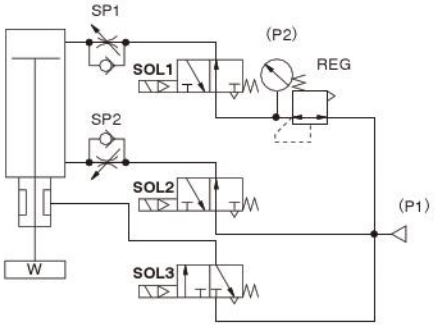

Regulator pressure setting

$$P2=\frac{\pi(D^2-d^2)P1-4W}{\pi\cdot D^2}$$

D : Cylinder bore size (mm)
d : Rod diameter (mm)
P1: Supply pressure (MPa)
W: Load (N)

Regulator pressure setting

$$P2'=\frac{\pi(D'^2-d'^2)P1'-4W'}{\pi\cdot D'^2}$$

D' : Cylinder bore size [in.]
d' : Rod diameter [in.]
P1' : Supply pressure [psi.]
W' : Load [lbf]

●Vertical mounting (push up)

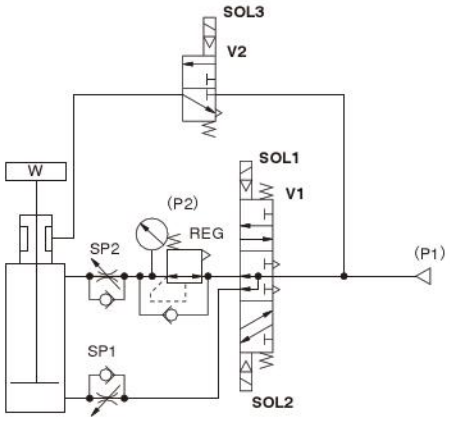

Regulator pressure setting

$$P2=\frac{\pi\cdot D^2\cdot P1-4W}{\pi(D^2-d^2)}$$

D : Cylinder bore size (mm)
d : Rod diameter (mm)
P1: Supply pressure (MPa)
W: Load (N)

Regulator pressure setting

$$P2'=\frac{\pi\cdot D'^2\cdot P1'-4W'}{\pi(D'^2-d'^2)}$$

D' : Cylinder bore size [in.]
d' : Rod diameter [in.]
P1' : Supply pressure [psi.]
W' : Load [lbf]

ON, OFF switch sequence for solenoid
(same for all mounting positions)

Valve / Operating state	V1		V2
	SOL1	SOL2	SOL3
Intermediate stop	OFF	OFF	OFF
Forward	OFF	ON	ON
Reverse	ON	OFF	ON

Air Flow Rate and Air Consumption

While the air cylinder's air flow rate and air consumption can be found through the following calculations, the quick reference chart to the right provides the answers more conveniently.

Air flow rate $Q_1=\frac{\pi D^2}{4}\times L\times\frac{60}{t}\times\frac{P+0.1013}{0.1013}\times10^{-6}$

Air consumption $Q_2=\frac{\pi D^2}{4}\times L\times2\times n\times\frac{P+0.1013}{0.1013}\times10^{-6}$

Q_1	: Required air flow rate for cylinder	ℓ /min(ANR)
Q_2	: Air consumption of cylinder	ℓ /min(ANR)
D	: Cylinder tube inner diameter	mm
L	: Cylinder stroke	mm
t	: Time required for cylinder to travel 1 stroke	s
n	: Number of cylinder reciprocations per minute	times/min
P	: Pressure	MPa

Air flow rate $Q_1'=\frac{\pi D'^2}{4}\times L'\times\frac{60}{t}\times\frac{P'+14.696}{14.696}\times\frac{1}{1728}$

Air consumption $Q_2'=\frac{\pi D'^2}{4}\times L'\times2\times n\times\frac{P'+14.696}{14.696}\times\frac{1}{1728}$

Q_1'	: Required air flow rate for cylinder	ft.³/min.(ANR)※
Q_2'	: Air consumption of cylinder	ft.³/min.(ANR)※
D′	: Cylinder tube inner diameter	in.
L′	: Cylinder stroke	in.
t	: Time required for cylinder to travel 1 stroke	sec.
n	: Number of cylinder reciprocations per minute	times/min
P′	: Pressure	psi.

※Refer to p.54 for an explanation of ANR.

Air consumption for each 1mm [0.0394in.] stroke

cm³ [in.³]/Reciprocation (ANR)

Bore size mm [in.]	Air pressure MPa [psi.]								
	0.1 [15]	0.2 [29]	0.3 [44]	0.4 [58]	0.5 [73]	0.6 [87]	0.7 [102]	0.8 [116]	0.9 [131]
32 [1.260]	3.20 [0.1953]	4.78 [0.2917]	6.37 [0.3887]	7.96 [0.4856]	9.55 [0.5826]	11.14 [0.6796]	12.72 [0.7762]	14.31 [0.8733]	15.90 [0.9703]
40 [1.575]	4.99 [0.3045]	7.48 [0.4565]	9.96 [0.6078]	12.44 [0.7591]	14.92 [0.9105]	17.40 [1.0618]	19.88 [1.2132]	22.36 [1.3645]	24.84 [1.5158]
50 [1.969]	7.80 [0.4760]	11.68 [0.7128]	15.56 [0.9495]	19.43 [1.1857]	23.31 [1.4225]	27.19 [1.6592]	31.06 [1.8954]	34.93 [2.1316]	38.78 [2.3665]
63 [2.480]	12.39 [0.7561]	18.54 [1.1314]	24.70 [1.5073]	30.85 [1.8826]	37.01 [2.2585]	43.16 [2.6338]	49.32 [3.0097]	55.46 [3.3844]	61.57 [3.7572]
80 [3.150]	19.98 [1.2193]	29.90 [1.8246]	39.83 [2.4306]	49.75 [3.0359]	59.67 [3.6413]	69.60 [4.2473]	79.52 [4.8526]	89.45 [5.4586]	99.37 [6.0640]
100 [3.940]	31.21 [1.9046]	46.72 [2.8510]	62.23 [3.7975]	77.73 [4.7434]	93.24 [5.6899]	108.75 [6.6364]	124.25 [7.5822]	139.76 [8.5287]	155.27 [9.4752]
125 [4.921]	48.77 [2.9761]	73.00 [4.4548]	97.23 [5.9334]	121.46 [7.4120]	145.69 [8.8906]	169.92 [10.369]	194.14 [11.847]	218.37 [13.326]	242.60 [14.804]

The figures in the table show the air flow rate and air consumption when an air cylinder makes 1 reciprocation with stroke of 1mm [0.0394in.]. The air flow rate and consumption actually required is found by the following calculations.

●Finding the air flow rate (for selecting F.R.L., valves, etc.)

Example: When operating an air cylinder with bore size of 40mm [1.575in.] at speed of 300mm/s [11.8in./sec.], and under air pressure of 0.5MPa [73psi.]

$14.92\times\frac{1}{2}\times300\times10^{-3}\fallingdotseq2.24$ ℓ /s [0.0791ft.³/sec.] (ANR)

(At this time, the air flow rate per minute is $14.92\times\frac{1}{2}\times300\times60\times10^{-3}=$ 134.28 ℓ/min [4.74ft.³/min.] (ANR).)

●Finding the air consumption

Example 1. When operating an air cylinder with bore size of 40mm [1.575in.] and stroke of 100mm [3.94in.], and under air pressure of 0.5MPa [73psi.], for 1 reciprocation

$14.92\times100\times10^{-3}=1.492$ ℓ [0.0527ft.³]/Reciprocation (ANR)

Example 2. When operating an air cylinder with bore size of 40mm [1.575in.] and stroke of 100mm [3.94in.], and under air pressure of 0.5MPa [73psi.], for 10 reciprocations per minute

$14.92\times100\times10\times10^{-3}=14.92$ ℓ /min [0.527ft.³/min.] (ANR)

Cylinder Thrust

Select a suitable cylinder bore size considering the load and air pressure to obtain the required thrust.

Since the figures in the table are calculated values, select a bore size that results in a load ratio (load ratio = $\frac{\text{Load}}{\text{Calculated value}}$) of 70% or less (50% or less for high speed application).

N [lbf.]

Bore size mm [in.]	Rod diameter mm [in.]	Operation	Pressure area mm² [in²]	Air pressure MPa [psi.]									
				0.1 [15]	0.2 [29]	0.3 [44]	0.4 [58]	0.5 [73]	0.6 [87]	0.7 [102]	0.8 [116]	0.9 [131]	1 [145]
32 [1.260]	**12 [0.472]**	Push side	804 [1.246]	80 [18.0]	161 [36.2]	241 [54.2]	322 [72.4]	402 [90.4]	482 [108]	563 [127]	643 [145]	724 [163]	804 [181]
		Pull side	690 [1.070]	69 [15.5]	138 [31.0]	207 [46.5]	276 [62.0]	345 [77.6]	414 [93.1]	483 [109]	552 [124]	621 [140]	690 [155]
40 [1.575]	**16 [0.630]**	Push side	1256 [1.947]	126 [28.3]	251 [56.4]	377 [84.7]	502 [113]	628 [141]	754 [169]	879 [198]	1005 [226]	1130 [254]	1256 [282]
		Pull side	1055 [1.635]	106 [23.8]	211 [47.4]	317 [71.3]	422 [94.9]	528 [119]	633 [142]	739 [166]	844 [190]	950 [214]	1055 [237]
50 [1.969]	**20 [0.787]**	Push side	1963 [3.043]	196 [44.1]	393 [88.3]	589 [132]	785 [176]	982 [221]	1178 [265]	1374 [309]	1570 [353]	1767 [397]	1963 [441]
		Pull side	1649 [2.556]	165 [37.1]	330 [74.2]	495 [111]	660 [148]	825 [185]	989 [222]	1154 [259]	1319 [297]	1484 [334]	1649 [371]
63 [2.480]	**20 [0.787]**	Push side	3117 [4.831]	312 [70.1]	623 [140]	935 [210]	1247 [280]	1559 [350]	1870 [420]	2182 [491]	2494 [561]	2805 [631]	3117 [701]
		Pull side	2803 [4.345]	280 [62.9]	561 [126]	841 [189]	1121 [252]	1402 [315]	1682 [378]	1962 [380]	2242 [504]	2523 [567]	2803 [630]
80 [3.150]	**25 [0.984]**	Push side	5026 [7.790]	503 [113]	1005 [226]	1508 [339]	2010 [452]	2513 [565]	3016 [678]	3518 [791]	4021 [904]	4523 [1017]	5026 [1130]
		Pull side	4536 [7.031]	454 [102]	907 [204]	1361 [306]	1814 [408]	2268 [510]	2722 [612]	3175 [714]	3629 [816]	4082 [918]	4536 [1020]
100 [3.940]	**30 [1.181]**	Push side	7853 [12.17]	785 [176]	1571 [353]	2356 [530]	3141 [706]	3927 [883]	4712 [1059]	5497 [1236]	6282 [1412]	7068 [1589]	7853 [1765]
		Pull side	7147 [11.08]	715 [161]	1429 [321]	2144 [482]	2859 [643]	3574 [803]	4288 [964]	5003 [1125]	5718 [1285]	6432 [1446]	7147 [1607]
125 [4.921]	**35 [1.378]**	Push side	12271 [19.02]	1227 [276]	2454 [552]	3681 [827]	4908 [1103]	6136 [1379]	7363 [1655]	8590 [1931]	9817 [2207]	11044 [2483]	12271 [2759]
		Pull side	11310 [17.53]	1131 [254]	2262 [508]	3393 [763]	4524 [1017]	5655 [1251]	6786 [1525]	7917 [1780]	9048 [2034]	10179 [2288]	11310 [2542]

DYNA STANDARD CYLINDERS

Symbol

Specifications

Item / Bore size mm [in.]	32 [1.260]	40 [1.575]	50 [1.969]	63 [2.480]	80 [3.150]	100 [3.940]	125 [4.921]
Operation type	Double acting type						
Media	Air						
Mounting type	Basic type, Foot type, Axial foot type, Rod side flange type, Head side flange type, Clevis type, Pivot type, Trunnion type						
Operating pressure range MPa [psi.]	0.05～1.0 [7～145]						
Proof pressure MPa [psi.]	1.5 [218]						
Operating temperature range °C [°F]	—10～70 [14～158] (Freezing prohibited, With sensor is 0～60 [32～140], Heat resistant specification is 5～120 [41～248] Note)						
Operating speed range mm/s [in./sec.]	30～800 [1.2～31.5]	30～700 [1.2～27.6]					
Cushion	Variable cushion at both ends of stroke						
Cushion stroke mm [in.]	16 [0.630]		20 [0.787]		25 [0.984]		
Lubrication	Not required (If lubrication is required, use Turbine Oil Class 1 (ISO VG32) or equivalent.)						
Port size Rc	1/8	1/4	3/8		1/2		

Bore Size and Stroke

mm

Bore size	Standard strokes	Maximum available stroke: Standard specification (Aluminum tube) Heat resistant type	Maximum available stroke: Non-ion specification Steel tube specification
32	50, 75, 100, 150, 200, 250, 300, 350, 400, 450, 500, 600, 700	700	700
40	50, 75, 100, 150, 200, 250, 300, 350, 400, 450, 500, 600, 700	1000	1000
50	800	1500	1500
63	50, 75, 100, 150, 200, 250, 300, 350, 400, 450, 500, 600, 700 800, 900, 1000	1500	1500
80			
100			
125			

Remarks: 1. Stroke tolerance;
Strokes of 250 or less: $^{+1}_{0}$ [$^{+0.039}_{0}$in.]
Strokes of 251～1000: $^{+1.5}_{0}$ [$^{+0.059}_{0}$in.]
Strokes of 1001 or more: $^{+2.0}_{0}$ [$^{+0.079}_{0}$in.]
2. For non-standard strokes, consult us.
3. Cylinders with magnets are not available for heat resistant specification and steel tube specification.
4. For the maximum available stroke with bellows specification, see p.538.

Order Codes

DDA □ **50×100** – □ – □ – □ – □ – □ – □ □ □

Bore size × Stroke

Non-ion specification
Blank — Standard
NCU — Non-ion specification

Tube material
Blank — Standard (Aluminum tube)
FT — Steel tube specification (Not available for cylinder with magnet.)

Types of bellows
JT — Nylon tarpaulin (～80°C [176°F])
JC — Chloroprene (～100°C [212°F])
JK — Conex (～200°C [392°F])
JA — Alumix (～250°C [482°F])
●Conex is a registered trademark of Teijin, Inc.
●The temperatures shown are the bellows' own durable temperatures, and are not temperatures for cylinder use.

Sensor switch (For cylinder with magnet)

ZC130	2-lead wire	Solid state type	with indicator lamp	DC10～28V
ZC153	3-lead wire	Solid state type	with indicator lamp	DC4.5～28V
CS5T	2-lead wire	Reed switch type	without indicator lamp	DC5～28V AC85～115V
CS11T	2-lead wire	Reed switch type	with indicator lamp	DC10～28V
CS2F	DIN type	Reed switch type	with indicator lamp	AC85～230V
CS3F	DIN type	Reed switch type	with indicator lamp	DC10～30V
CS4F	DIN type	Reed switch type	with indicator lamp	DC10～30V
CS5F	DIN type	Reed switch type	without indicator lamp	DC3～30V

●For mounting location of sensor switch, see p.534.
●**CS□F** comes with a DIN connector. All others are grommet type.
●Orders for sensor switches only also accepted.

Number of sensor switches
1 — With 1 sensor switch
2 — With 2 sensor switches
⋮ ⋮
n — With n sensor switches

Lead wire length
(Applicable only to **ZC,CS□T** types)
A : 1000mm [39in.]
B : 3000mm [118in.]

Cylinder specification
Blank — Standard cylinder
F — Heat resistant cylinder (Not available for cylinder with magnet.) Note
J — Standard cylinder with bellows
FJ — Heat resistant cylinder with bellows (Not available for cylinder with magnet.)

DYNA Cylinder Basic model

●Combinations of heat resistant, non-ion, and steel tube specifications are made to order.

Note: Heat resistant specification not available in ϕ32 [1.260in.] and ϕ125 [4.921in.].

Mounting type
Blank — Basic type
1 — Foot mounting type
2 — Axial foot mounting type
3 — Rod side flange mounting type
5 — Head side flange mounting type
7 — Clevis mounting type (with pin)
7-7C — Clevis mounting type (with supporting bracket)
8 — Pivot mounting type
11 — Trunnion type
11-11T — Trunnion type (with supporting brackets)
●Mounting brackets are already assembled at shipping.
●Orders for mounting brackets only are also accepted.

Rod end accessory
Blank — No rod end accessory
Y — With Y type knuckle (with pin)
I — With I type knuckle
●For the cylinder joint and cylinder rod end, see p.1568.
●Orders for rod end accessories only are also accepted.
●For dimensions of rod end accessories, see p.537.

Inner Construction and Major Parts

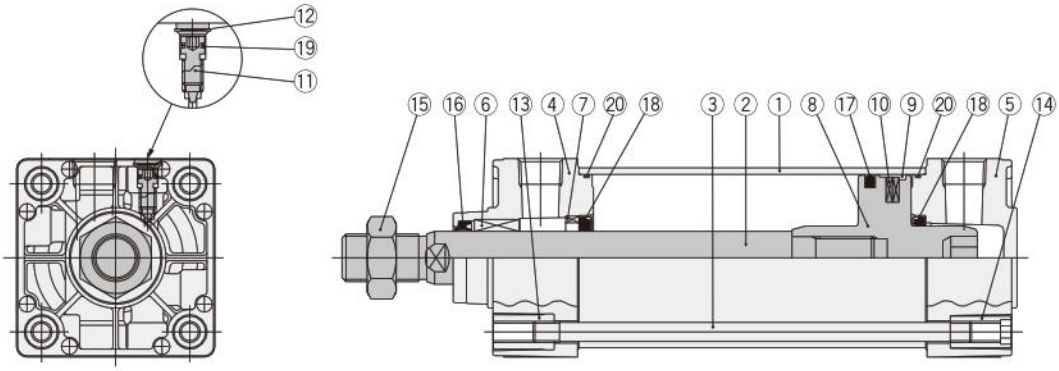

Major Parts and Materials

No.	Parts	Materials
①	Cylinder tube	Aluminum alloy, and steel tube specification is steel
②	Piston rod	ϕ32:Stainless steel, ϕ40~ϕ125:Carbon steel for machine structural use
③	Tie rod	Carbon steel for machine structural use
④	Rod cover	Aluminum die-casting
⑤	Head cover	Aluminum die-casting
⑥	Rod bushing	Oil impregnated sintered copper alloy
⑦	Keep ring	Aluminum alloy
⑧	Piston	Aluminum alloy
⑨	Wear ring	Plastic
⑩	Magnet	Rubber magnet
⑪	Cushion needle	Carbon steel for machine structural use
⑫	Snap ring	Spring steel
⑬	Tie rod nut R	Rolled steel for general structural use
⑭	Tie rod nut H	Chrome-molybdenum steel
⑮	Rod end nut	Rolled steel for general structural use
⑯	Rod seal	Synthetic rubber (NBR)

No.	Parts	Materials
⑰	Piston seal	Synthetic rubber (NBR)
⑱	Cushion seal	Synthetic rubber (NBR)
⑲	Cushion gasket	Synthetic rubber (NBR)
⑳	Tube gasket	Synthetic rubber (NBR)
—	Foot mounting bracket	Rolled steel for general structural use
—	Axial foot mounting bracket	Cast iron
—	Flange mounting bracket	Rolled steel for general structural use
—	Clevis mounting bracket	Cast iron
—	Clevis supporting bracket	Cast iron
—	Pivot mounting bracket	Cast iron
—	Trunnion bracket	Cast iron
—	Trunnion supporting bracket	Cast iron
—	Knuckles	Cast iron[Note]

Note: The I knuckle for ϕ 125 only, is carbon steel for machine structural use.

Seals

Parts / Bore size mm \ Quantity	Rod seal	Piston seal	Cushion seal	Tube gasket	Cushion gasket
	1★	1★	2	2★	2
32	DRP12	PWP32N	CPF15	1.5×32	S5
40	DRP16 (DRP16F)	PWP40N (PSD-40F)	CPF20 (PCS20F)	1.5×40	S5
50	DRP20 (DRP20F)	PWP50N (PSD-50F)	CPF24 (PCS24F)	1.5×50	S6
63	DRP20 (DRP20F)	PWP63N (PSD-63F)	CPF24 (PCS24F)	1.5×63	S6
80	DRP25 (DRP25F)	PWP80N (PSD-80F)	CPF30 (PCS30F)	1.5×80	S6
100	DRP30 (DRP30F)	PWP100N (PSD-100F)	CPF35 (PCS35F)	1.5×100	S6
125	DRP35	PWP125N	CPF45	2.0×125	S7

Remarks: 1. Items in parentheses ( ) are for heat resistant specification.
2. Items marked with a star (★) are available as repair kits.
Order code: For standard cylinders··· **SRK-NDDA** [Bore size]

Mass

kg [lb.]

Bore size mm [in.]	Zero stroke mass: Basic type	Foot mounting type	Axial foot mounting type	Flange mounting type	Clevis mounting type (with pin)	Clevis mounting type (with supporting bracket)	Pivot mounting type	Trunnion type	Trunnion type (with supporting brackets)	Additional mass for each 1mm [0.0394in.] stroke	Mass of 1 sensor sw [with holder]: ZC□□□ CS□T[Note]	CS□F	Mass of knuckle: Y type knuckle (with pin)	I type knuckle
32 [1.260]	0.57 [1.26] (0.60 [1.32])	0.68 [1.50] (0.71 [1.57])	0.71 [1.57] (0.74 [1.63])	0.77 [1.70] (0.80 [1.76])	0.76 [1.68] (0.79 [1.74])	1.22 [2.69] (1.25 [2.76])	0.69 [1.52] (0.72 [1.59])	0.87 [1.92] (0.90 [1.98])	1.09 [2.40] (1.12 [2.47])	0.00218 [0.00481] (0.00324 [0.00714])	0.04 [0.09]	0.05 [0.11]	0.22 [0.49]	0.16 [0.35]
40 [1.575]	0.65 [1.43] (0.69 [1.52])	0.78 [1.72] (0.82 [1.81])	0.85 [1.87] (0.89 [1.96])	1.02 [2.25] (1.06 [2.34])	0.92 [2.03] (0.96 [2.12])	1.62 [3.57] (1.66 [3.66])	0.83 [1.83] (0.87 [1.92])	1.13 [2.49] (1.17 [2.58])	1.63 [3.59] (1.67 [3.68])	0.00300 [0.00662] (0.00431 [0.00950])			0.27 [0.60]	0.16 [0.35]
50 [1.969]	1.02 [2.25] (1.08 [2.38])	1.19 [2.62] (1.25 [2.76])	1.34 [2.95] (1.40 [3.09])	1.41 [3.11] (1.47 [3.24])	1.41 [3.11] (1.47 [3.24])	2.11 [4.65] (2.17 [4.78])	1.28 [2.82] (1.34 [2.95])	1.57 [3.46] (1.63 [3.59])	2.07 [4.56] (2.13 [4.70])	0.00428 [0.00944] (0.00635 [0.01400])			0.34 [0.75]	0.21 [0.46]
63 [2.480]	1.36 [3.00] (1.44 [3.18])	1.59 [3.51] (1.67 [3.68])	1.88 [4.15] (1.96 [4.32])	1.89 [4.17] (1.97 [4.34])	1.84 [4.06] (1.92 [4.23])	2.54 [5.60] (2.62 [5.78])	1.78 [3.92] (1.86 [4.10])	2.06 [4.54] (2.14 [4.72])	2.56 [5.64] (2.64 [5.82])	0.00515 [0.01136] (0.00773 [0.01704])	0.04 [0.09]	0.06 [0.13]	0.34 [0.75]	0.21 [0.46]
80 [3.150]	2.32 [5.12] (2.49 [5.49])	2.70 [5.95] (2.87 [6.33])	3.17 [6.99] (3.34 [7.36])	3.92 [8.64] (4.09 [9.02])	3.24 [7.14] (3.41 [7.52])	3.96 [8.73] (4.13 [9.11])	3.40 [7.50] (3.57 [7.87])	3.48 [7.67] (3.65 [8.05])	4.20 [9.26] (4.37 [9.64])	0.00834 [0.01839] (0.01302 [0.02871])			0.87 [1.92]	0.62 [1.37]
100 [3.940]	2.94 [6.48] (3.15 [6.95])	3.41 [7.52] (3.62 [7.98])	4.22 [9.31] (4.43 [9.77])	5.16 [11.38] (5.37 [11.84])	4.18 [9.22] (4.39 [9.68])	4.90 [10.80] (5.11 [11.27])	4.33 [9.55] (4.54 [10.01])	4.47 [9.86] (4.68 [10.32])	5.19 [11.44] (5.40 [11.91])	0.01061 [0.02340] (0.01642 [0.03621])			1.47 [3.24]	1.24 [2.73]
125 [4.921]	4.43 [9.77] (4.77 [10.52])	4.90 [10.80] (5.24 [11.55])	5.81 [12.81] (6.15 [13.56])	7.30 [16.10] (7.64 [16.85])	6.40 [14.11] (6.74 [14.86])	9.21 [20.31] (9.55 [21.06])	6.88 [15.17] (7.22 [15.92])	7.84 [17.29] (8.18 [18.04])	9.39 [20.70] (9.73 [21.45])	0.01490 [0.03285] (0.02311 [0.05096])	0.046 [0.101]	0.066 [0.146]	1.47 [3.24]	1.24 [2.73]

Note: For lead wire length A (1000mm [39in.]).
Remark: Figures in parentheses ( ) are for steel tube specification.

Calculation example: For foot mounting type with bore size of 50mm, and stroke of 100mm, 1.19+(0.00428×100)=1.618kg [3.568lb.]

Dimensions of Basic Type (mm)

DDA 32× Stroke

DDA32

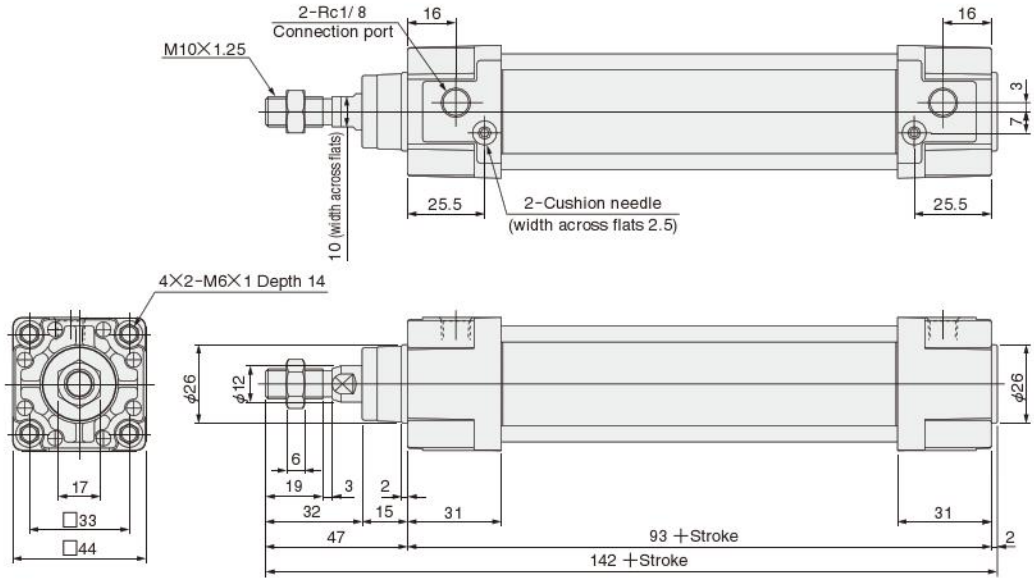

DDA Bore size × Stroke

DDA Bore size

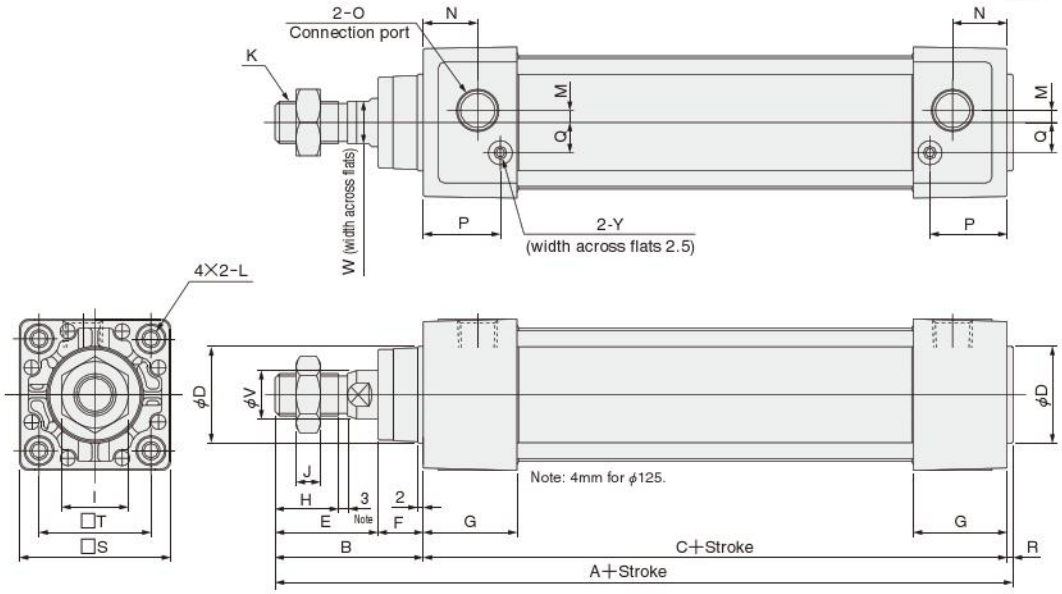

Bore mm[in.] \ Code	A	B	C	D	E	F	G	H	I	J	K	L
40 [1.575]	144	49	93	32	34	15	31	21	22	8	M14×1.5	M 6×1 Depth 14
50 [1.969]	152	57	93	38	42	15	31	29	27	11	M18×1.5	M 6×1 Depth 14
63 [2.480]	155	57	96	38	42	15	32	29	27	11	M18×1.5	M 8×1.25 Depth 14
80 [3.150]	185	75	108	44	54	21	36	37	32	13	M22×1.5	M10×1.5 Depth 15
100 [3.940]	185	75	108	50	54	21	36	37	36	14	M26×1.5	M10×1.5 Depth 15
125 [4.921]	205	89	114	60	68	21	36	50	36	16	M27×2	M12×1.75 Depth 15

Bore mm[in.] \ Code	M	N	O	P	Q	R	S	T	V	W	Y
40 [1.575]	4	18	Rc1/4	25.5	10	2	50	37	16	14	2.5
50 [1.969]	7	18	Rc3/8	24	12	2	62	47	20	17	3
63 [2.480]	8	18	Rc3/8	25	12	2	75	56	20	17	3
80 [3.150]	11	20	Rc1/2	29	16	2	94	70	25	21	3
100 [3.940]	12	20	Rc1/2	29	18	2	112	84	30	26	3
125 [4.921]	14	20	Rc1/2	29	20	2	136	104	35	32	3

Dimensions of Foot Mounting Type (mm)

DDA Bore size × Stroke **-1**

Foot mounting bracket only DDA Bore size -1

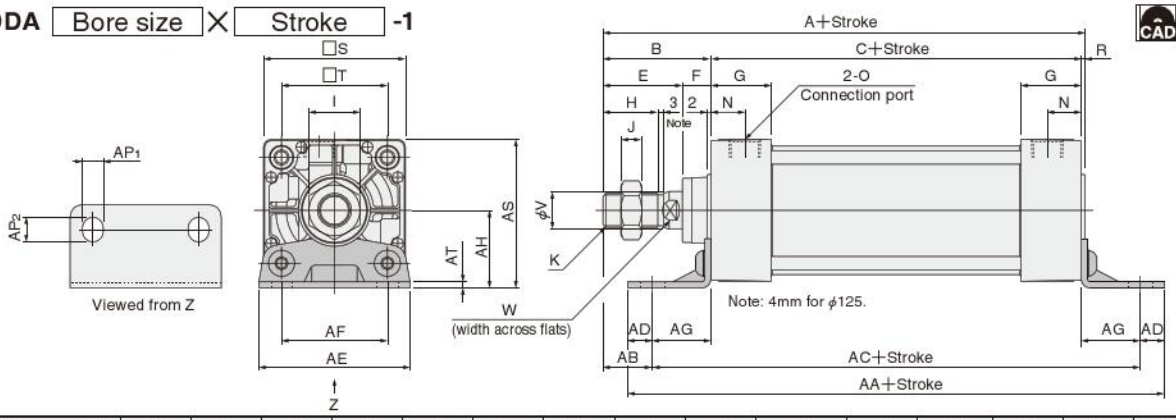

Bore mm [in.] \ Code	A	B	C	E	F	G	H	I	J	K	N	O	R	S	T	V	W
32 [1.260]	142	47	93	32	15	31	19	17	6	M10×1.25	16	Rc1/8	2	44	33	12	10
40 [1.575]	144	49	93	34	15	31	21	22	8	M14×1.5	18	Rc1/4	2	50	37	16	14
50 [1.969]	152	57	93	42	15	31	29	27	11	M18×1.5	18	Rc3/8	2	62	47	20	17
63 [2.480]	155	57	96	42	15	32	29	27	11	M18×1.5	18	Rc3/8	2	75	56	20	17
80 [3.150]	185	75	108	54	21	36	37	32	13	M22×1.5	20	Rc1/2	2	94	70	25	21
100 [3.940]	185	75	108	54	21	36	37	36	14	M26×1.5	20	Rc1/2	2	112	84	30	26
125 [4.921]	205	89	114	68	21	36	50	36	16	M27×2	20	Rc1/2	2	136	104	35	32

Bore mm [in.] \ Code	AA	AB	AC	AD	AE	AF	AG	AH	AP1	AP2	AS	AT
32 [1.260]	153	26.5	134	9.5	50	33	20.5	28	9	11	50	3.2
40 [1.575]	165	25.5	140	12.5	57	36	23.5	30	11	13	55	3.2
50 [1.969]	173	29	149	12	68	47	28	36.5	11	13	67.5	3.2
63 [2.480]	184	26	158	13	80	56	31	41	11	13	78.5	3.2
80 [3.150]	200	45	168	16	97	70	30	49	14	16	96	4
100 [3.940]	200	45	168	16	112	84	30	57	14	16	113	4
125 [4.921]	220	54	184	18	136	104	35	70	18	20	138	6

Dimensions of Axial Foot Mounting Type (mm)

DDA Bore size × Stroke **-2**

Axial foot mounting bracket only DDA Bore size -2

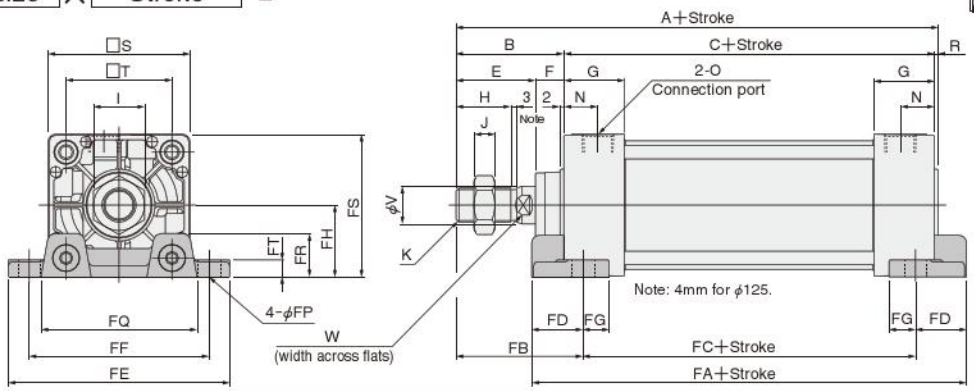

Bore mm [in.] \ Code	A	B	C	E	F	G	H	I	J	K	N	O	R	S	T	V	W
32 [1.260]	142	47	93	32	15	31	19	17	6	M10×1.25	16	Rc1/8	2	44	33	12	10
40 [1.575]	144	49	93	34	15	31	21	22	8	M14×1.5	18	Rc1/4	2	50	37	16	14
50 [1.969]	152	57	93	42	15	31	29	27	11	M18×1.5	18	Rc3/8	2	62	47	20	17
63 [2.480]	155	57	96	42	15	32	29	27	11	M18×1.5	18	Rc3/8	2	75	56	20	17
80 [3.150]	185	75	108	54	21	36	37	32	13	M22×1.5	20	Rc1/2	2	94	70	25	21
100 [3.940]	185	75	108	54	21	36	37	36	14	M26×1.5	20	Rc1/2	2	112	84	30	26
125 [4.921]	205	89	114	68	21	36	50	36	16	M27×2	20	Rc1/2	2	136	104	35	32

Bore mm [in.] \ Code	FA	FB	FC	FD	FE	FF	FG	FH	FP	FQ	FR	FS	FT
32 [1.260]	119	57	73	23	81	63	14	22	9	54	14	44	8
40 [1.575]	119	59	73	23	92	70	14	25	12	58	16	50	8
50 [1.969]	123	67	73	25	105	83	14	31	12	68	17	62	9
63 [2.480]	130	67	76	27	117	95	14	38	12	84	22	75.5	9
80 [3.150]	150	88	82	34	147	121	18	47	14	104	28	94	13
100 [3.940]	158	88	82	38	168	140	18	57	14	120	30	113	14
125 [4.921]	172	106	80	46	213	175	21	69	18	144	35	137	18

Dimensions of Rod Side Flange Mounting Type (mm)

DDA Bore size × Stroke **-3**

CAD Flange mounting bracket only DDA Bore size -3

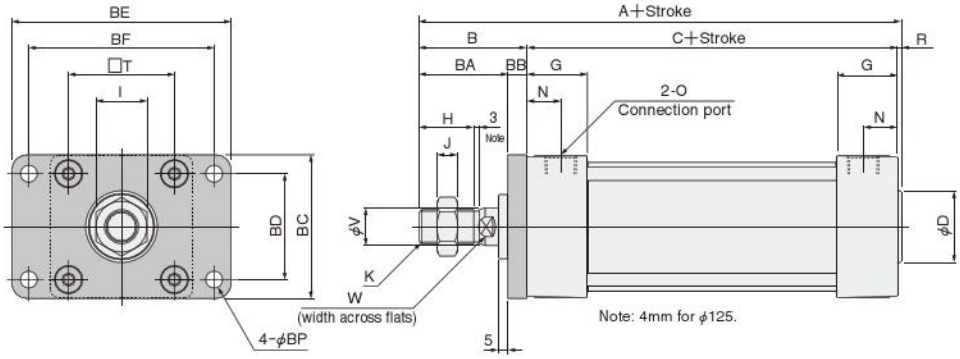

Bore mm[in.] \ Code	A	B	C	D	G	H	I	J	K	N	O	R	T	V	W
32 [1.260]	142	47	93	26	31	19	17	6	M10×1.25	16	Rc1/8	2	33	12	10
40 [1.575]	144	49	93	32	31	21	22	8	M14×1.5	18	Rc1/4	2	37	16	14
50 [1.969]	152	57	93	38	31	29	27	11	M18×1.5	18	Rc3/8	2	47	20	17
63 [2.480]	155	57	96	38	32	29	27	11	M18×1.5	18	Rc3/8	2	56	20	17
80 [3.150]	185	75	108	44	36	37	32	13	M22×1.5	20	Rc1/2	2	70	25	21
100 [3.940]	185	75	108	50	36	37	36	14	M26×1.5	20	Rc1/2	2	84	30	26
125 [4.921]	205	89	114	60	36	50	36	16	M27×2	20	Rc1/2	2	104	35	32

Bore mm[in.] \ Code	BA	BB	BC	BD	BE	BF	BP
32 [1.260]	37	10	47	33	72	58	7
40 [1.575]	39	10	52	36	84	70	7
50 [1.969]	47	10	65	47	104	86	9
63 [2.480]	47	10	76	56	116	98	9
80 [3.150]	59	16	95	70	143	119	12
100 [3.940]	59	16	115	84	162	138	12
125 [4.921]	73	16	138	104	196	168	14

Dimensions of Head Side Flange Mounting Type (mm)

DDA Bore size × Stroke **-5**

CAD Flange mounting bracket only DDA Bore size -3

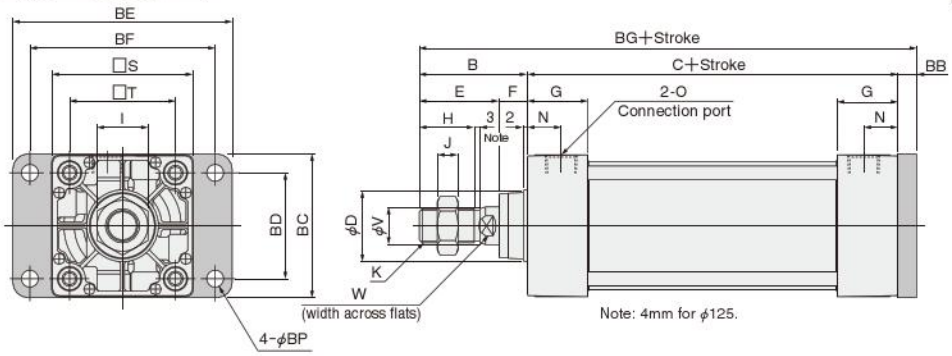

Bore mm[in.] \ Code	B	C	D	E	F	G	H	I	J	K	N	O	S	T	V	W
32 [1.260]	47	93	26	32	15	31	19	17	6	M10×1.25	16	Rc1/8	44	33	12	10
40 [1.575]	49	93	32	34	15	31	21	22	8	M14×1.5	18	Rc1/4	50	37	16	14
50 [1.969]	57	93	38	42	15	31	29	27	11	M18×1.5	18	Rc3/8	62	47	20	17
63 [2.480]	57	96	38	42	15	32	29	27	11	M18×1.5	18	Rc3/8	75	56	20	17
80 [3.150]	75	108	44	54	21	36	37	32	13	M22×1.5	20	Rc1/2	94	70	25	21
100 [3.940]	75	108	50	54	21	36	37	36	14	M26×1.5	20	Rc1/2	112	84	30	26
125 [4.921]	89	114	60	68	21	36	50	36	16	M27×2	20	Rc1/2	136	104	35	32

Bore mm[in.] \ Code	BB	BC	BD	BE	BF	BG	BP
32 [1.260]	10	47	33	72	58	150	7
40 [1.575]	10	52	36	84	70	152	7
50 [1.969]	10	65	47	104	86	160	9
63 [2.480]	10	76	56	116	98	163	9
80 [3.150]	16	95	70	143	119	199	12
100 [3.940]	16	115	84	162	138	199	12
125 [4.921]	16	138	104	196	168	219	14

Dimensions of Clevis Mounting Type (mm)

DDA Bore size × Stroke **-7**

CAD Clevis mounting bracket only DDA Bore size -7

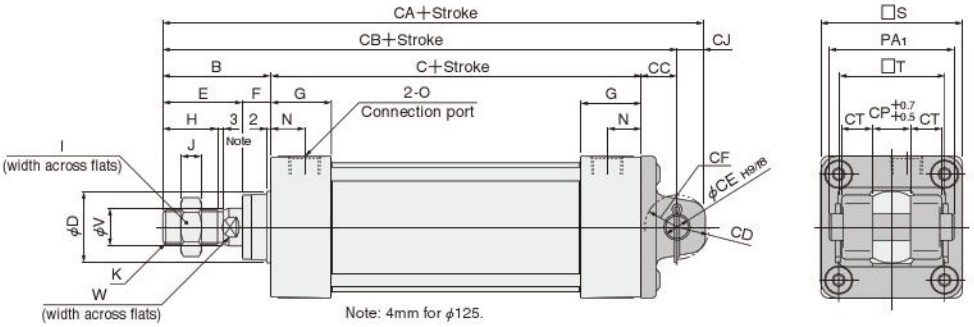

Bore mm [in.] \ Code	B	C	D	E	F	G	H	I	J	K	N	O	S	T	V	W
32 [1.260]	47	93	26	32	15	31	19	17	6	M10×1.25	16	Rc1/8	44	33	12	10
40 [1.575]	49	93	32	34	15	31	21	22	8	M14×1.5	18	Rc1/4	50	37	16	14
50 [1.969]	57	93	38	42	15	31	29	27	11	M18×1.5	18	Rc3/8	62	47	20	17
63 [2.480]	57	96	38	42	15	32	29	27	11	M18×1.5	18	Rc3/8	75	56	20	17
80 [3.150]	75	108	44	54	21	36	37	32	13	M22×1.5	20	Rc1/2	94	70	25	21
100 [3.940]	75	108	50	54	21	36	37	36	14	M26×1.5	20	Rc1/2	112	84	30	26
125 [4.921]	89	114	60	68	21	36	50	36	16	M27×2	20	Rc1/2	136	104	35	32

Bore mm [in.] \ Code	CA	CB	CC	CD	CE	CF	CJ	CP	CT	PA1
32 [1.260]	172	159	19	R15	12	R17	13	16	8.5	46
40 [1.575]	174	161	19	R15	14	R17	13	20	12.5	58
50 [1.969]	184	169	19	R17	14	R17	15	20	16.5	66
63 [2.480]	187	172	19	R17	14	R17	15	20	16.5	66
80 [3.150]	236	215	32	R24	20	R30	21	32	17.5	78
100 [3.940]	236	215	32	R24	20	R30	21	32	17.5	78
125 [4.921]	251	235	32	R22	20	R30	16	32	16.5	78

●With Supporting Bracket DDA Bore size × Stroke -7-7C

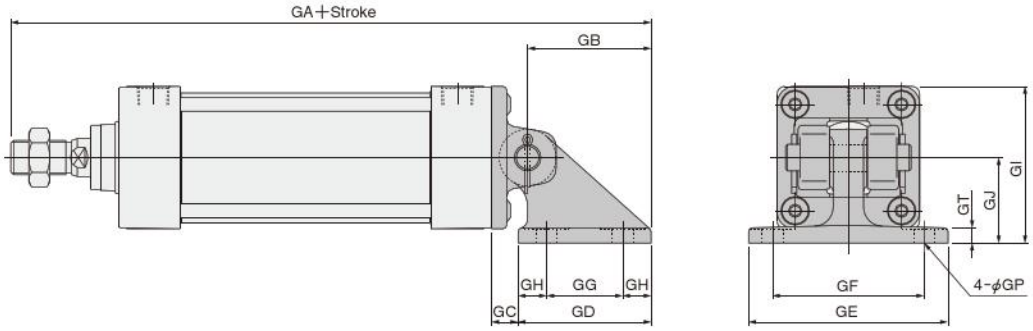

Bore mm [in.] \ Code	GA	GB	GC	GD	GE	GF	GG	GH	GI	GJ	GP	GT
32 [1.260]	215.5	56.5	12.5	63	85	65	40	11.5	57	35	9(Thru hole)	8
40 [1.575]	227.5	66.5	12.5	73	105	80	40	16.5	70	45	11(Thru hole)	8
50 [1.969]	235.5	66.5	12.5	73	105	80	40	16.5	76	45	11(Thru hole)	8
63 [2.480]	238.5	66.5	12.5	73	105	80	40	16.5	82.5	45	11(Thru hole)	8
80 [3.150]	301.5	86.5	20.5	98	135	105	65	16.5	107	60	14(Thru hole)	12
100 [3.940]	301.5	86.5	20.5	98	135	105	65	16.5	116	60	14(Thru hole)	12
125 [4.921]	349.5	114.5	29.5	117	145	110	77	20	143	75	18(Thru hole)	15

Dimensions of Pivot Mounting Type (mm)

DDA Bore size × Stroke **-8**

CAD Pivot mounting bracket only
DDA Bore size -8

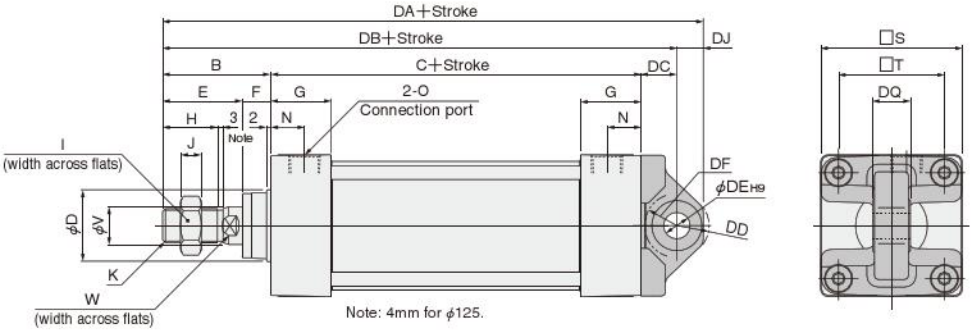

Bore mm[in.] \ Code	B	C	D	E	F	G	H	I	J	K	N	O	S	T	V	W
32 [1.260]	47	93	26	32	15	31	19	17	6	M10×1.25	16	Rc1/8	44	33	12	10
40 [1.575]	49	93	32	34	15	31	21	22	8	M14×1.5	18	Rc1/4	50	37	16	14
50 [1.969]	57	93	38	42	15	31	29	27	11	M18×1.5	18	Rc3/8	62	47	20	17
63 [2.480]	57	96	38	42	15	32	29	27	11	M18×1.5	18	Rc3/8	75	56	20	17
80 [3.150]	75	108	44	54	21	36	37	32	13	M22×1.5	20	Rc1/2	94	70	25	21
100 [3.940]	75	108	50	54	21	36	37	36	14	M26×1.5	20	Rc1/2	112	84	30	26
125 [4.921]	89	114	60	68	21	36	50	36	16	M27×2	20	Rc1/2	136	104	35	32

Bore mm[in.] \ Code	DA	DB	DC	DD	DE	DF	DJ	DQ
32 [1.260]	172	159	19	R16	12	R16	13	$16^{0}_{-0.070}$
40 [1.575]	175	161	19	R17	14	R17	14	$20^{0}_{-0.084}$
50 [1.969]	183	169	19	R17	14	R17	14	$20^{0}_{-0.084}$
63 [2.480]	186	172	19	R17	14	R17	14	$20^{0}_{-0.084}$
80 [3.150]	236	215	32	R24	20	R25	21	$32^{0}_{-0.100}$
100 [3.940]	235	215	32	R24	20	R26	20	$32^{0}_{-0.100}$
125 [4.921]	255	235	32	R25	20	R30	20	$32^{0}_{-0.100}$

Dimensions of Trunnion Type (mm)

DDA Bore size × Stroke **-11**

CAD Trunnion bracket only
DDA Bore size -11

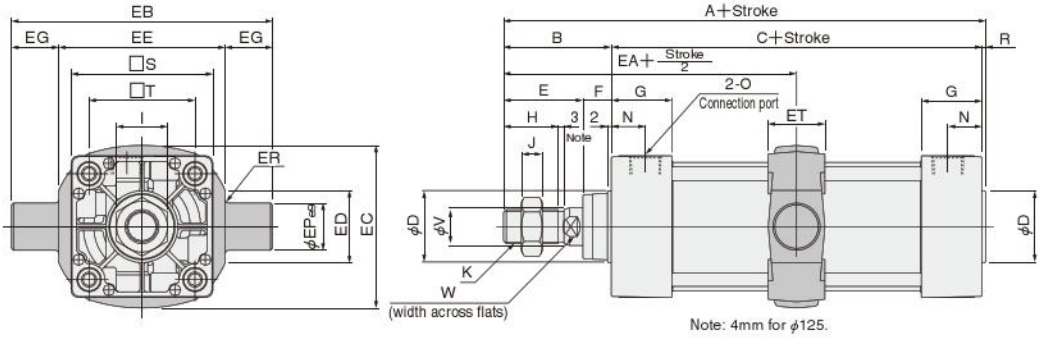

Bore mm [in.] \ Code	A	B	C	D	E	F	G	H	I	J	K	N	O	R	S	T	V	W
32 [1.260]	142	47	93	26	32	15	31	19	17	6	M10×1.25	16	Rc1/8	2	44	33	12	10
40 [1.575]	144	49	93	32	34	15	31	21	22	8	M14×1.5	18	Rc1/4	2	50	37	16	14
50 [1.969]	152	57	93	38	42	15	31	29	27	11	M18×1.5	18	Rc3/8	2	62	47	20	17
63 [2.480]	155	57	96	38	42	15	32	29	27	11	M18×1.5	18	Rc3/8	2	75	56	20	17
80 [3.150]	185	75	108	44	54	21	36	37	32	13	M22×1.5	20	Rc1/2	2	94	70	25	21
100 [3.940]	185	75	108	50	54	21	36	37	36	14	M26×1.5	20	Rc1/2	2	112	84	30	26
125 [4.921]	205	89	114	60	68	21	36	50	36	16	M27×2	20	Rc1/2	2	136	104	35	32

Bore mm [in.] \ Code	EA	EB	EC	ED	EE	EG	EP	ER	ET
32 [1.260]	93.5	87	53	20	55	16	16	R1	30
40 [1.575]	95.5	113	60	30	63	25	25	R1.6	30
50 [1.969]	103.5	126	72	30	76	25	25	R1.6	30
63 [2.480]	105	138	87	40	88	25	25	R1.6	30
80 [3.150]	129	164	105	40	114	25	25	R1.6	35
100 [3.940]	129	182	129	44	132	25	25	R2	40
125 [4.921]	146	208	158	45	158	25	25	R2	43

●With Supporting Brackets DDA Bore size × Stroke -11-11T

CAD Trunnion supporting bracket only
DDA Bore size -11T

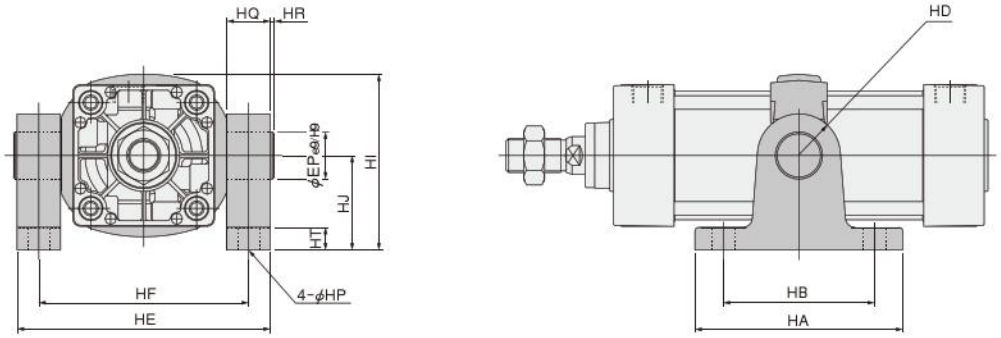

Bore mm [in.] \ Code	HA	HB	HD	HE	HF	HI	HJ	HP	HQ	HR	HT	EP
32 [1.260]	81	60	R16	85	70	66.5	40	9(Thru hole)	15	1	12	16
40 [1.575]	111	80	R22	109	86	80	50	12(Thru hole)	23	2	14	25
50 [1.969]	111	80	R22	122	99	86	50	12(Thru hole)	23	2	14	25
63 [2.480]	111	80	R22	134	111	93.5	50	12(Thru hole)	23	2	14	25
80 [3.150]	121	85	R22	160	137	122.5	70	14(Thru hole)	23	2	14	25
100 [3.940]	121	85	R22	178	155	134.5	70	14(Thru hole)	23	2	14	25
125 [4.921]	145	105	R30	208	183	164.5	85	18(Thru hole)	25	0	27	25

DYNA NON-ROTATING CYLINDERS

Symbol

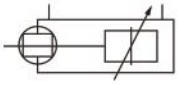

Specifications

Item / Bore size mm [in.]	40 [1.575]	50 [1.969]	63 [2.480]	80 [3.150]	100 [3.940]
Operation type	Double acting type				
Media	Air				
Mounting type	Basic type, Foot type, Axial foot type, Rod side flange type, Head side flange type, Clevis type, Pivot type, Trunnion type				
Operating pressure range MPa [psi.]	0.1～1.0 [15～145]				
Proof pressure MPa [psi.]	1.5 [218]				
Operating temperature range °C [°F]	—10～70 [14～158] (Freezing prohibited, With sensor is 0～60 [32～140].)				
Operating speed range mm/s [in./sec.]	50～500 [2.0～19.7]				
Cushion	Variable cushion at both ends of stroke				
Cushion stroke mm [in.]	16 [0.630]	20 [0.787]		25 [0.984]	
Lubrication	Not required (If lubrication is required, use Turbine Oil Class 1 (ISO VG32) or equivalent.)				
Non-rotating accuracy	±1°	±0.8°		±0.5°	
Allowable torque N·m [ft·lbf]	1 [0.74]	3.4 [2.51]		10 [7.38]	
Port size Rc	1/4	3/8		1/2	

Bore Size and Stroke

mm

Bore size	Standard strokes	Maximum available stroke
40	50, 75, 100, 150, 200, 250, 300, 350, 400, 450, 500	500
50		
63		
80		
100		

Remarks:
1. Stroke tolerance;
   Strokes of 250 or less: $^{+1}_{0}$ [$^{+0.039}_{0}$in.]
   Strokes of 251～500: $^{+1.5}_{0}$ [$^{+0.059}_{0}$in.]
2. For non-standard strokes, consult us.
3. Cylinders with magnets are not available for steel tube specification.
4. For the maximum available stroke with bellows specification, see p.538.

Order Codes

DDA □ **50×100** – □ – □ – □ – □ – □ □ □

Bore size × Stroke

Cylinder specification
- **L** —— Non-rotating cylinder
- **JL** —— Non-rotating cylinder with bellows

Types of bellows
- **JT** —— Nylon tarpaulin (～80°C [176°F])
- **JC** —— Chloroprene (～100°C [212°F])
- **JK** —— Conex (～200°C [392°F])
- **JA** —— Alumix (～250°C [482°F])
- ●Conex is a registered trademark of Teijin, Inc.
- ●The temperatures shown are the bellows' own durable temperatures, and are not temperatures for cylinder use.

Tube material
- **Blank** — Standard (Aluminum tube)
- **FT** —— Steel tube specification (Not available for cylinder with magnet.)

DYNA Cylinder Basic model

Mounting type
- **Blank** — Basic type
- **1** —— Foot mounting type
- **2** —— Axial foot mounting type
- **3** —— Rod side flange mounting type
- **5** —— Head side flange mounting type
- **7** —— Clevis mounting type (with pin)
- **7-7C** — Clevis mounting type (with supporting bracket)
- **8** —— Pivot mounting type
- **11** —— Trunnion type
- **11-11T** — Trunnion type (with supporting brackets)
- ●Mounting brackets are already assembled at shipping.
- ●Orders for mounting brackets only are also accepted.

Rod end accessory
- **Blank** — No rod end accessory
- **Y** —— With Y type knuckle (with pin)
- **I** —— With I type knuckle
- ●For the cylinder joint and cylinder rod end, see p.1568.
- ●Orders for rod end accessories only are also accepted.
- ●For dimensions of rod end accessories, see p.537.

Lead wire length (Applicable only to **ZC,CS□T** types)
- **A** : 1000mm [39in.]
- **B** : 3000mm [118in.]

Sensor switch (for cylinder with magnet)

ZC130	2-lead wire	Solid state type	with indicator lamp	DC10～28V
ZC153	3-lead wire	Solid state type	with indicator lamp	DC4.5～28V
CS5T	2-lead wire	Reed switch type	without indicator lamp	DC5～28V AC85～115V
CS11T	2-lead wire	Reed switch type	with indicator lamp	DC10～28V
CS2F	DIN type	Reed switch type	with indicator lamp	AC85～230V
CS3F	DIN type	Reed switch type	with indicator lamp	DC10～30V
CS4F	DIN type	Reed switch type	with indicator lamp	DC10～30V
CS5F	DIN type	Reed switch type	without indicator lamp	DC3～30V

- ●For mounting location of sensor switch, see p.534.
- ●Cylinders with magnets are not available in steel tube specification.
- ●**CS□F** comes with a DIN connector. All others are grommet type.
- ●Orders for sensor switches only are also accepted.

Number of sensor switches
- **1** With 1 sensor switch
- **2** —— With 2 sensor switches
- ⋮ ⋮
- **n** —— With n sensor switches

Inner Construction and Major Parts

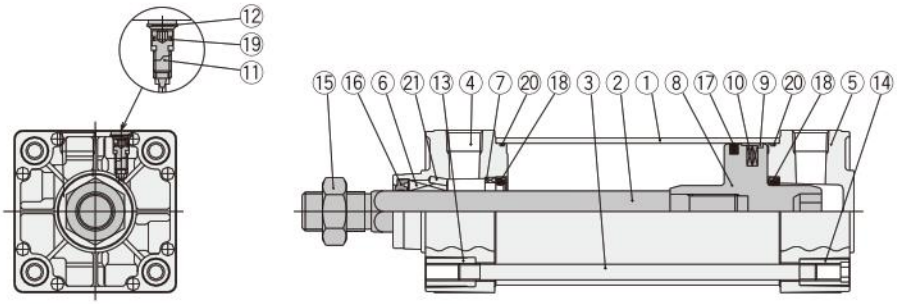

Major Parts and Materials

No.	Parts	Materials
①	Cylinder tube	Aluminum alloy, and steel tube specification is steel
②	Piston rod	Carbon steel for machine structural use
③	Tie rod	Carbon steel for machine structural use
④	Rod cover	Aluminum die-casting
⑤	Head cover	Aluminum die-casting
⑥	Rod bushing	Aluminum alloy
⑦	Keep ring	Aluminum alloy
⑧	Piston	Aluminum alloy
⑨	Wear ring	Plastic
⑩	Magnet	Rubber magnet
⑪	Cushion needle	Carbon steel for machine structural use
⑫	Snap ring	Spring steel
⑬	Tie rod nut R	Rolled steel for general structural use
⑭	Tie rod nut H	Chrome-molybdenum steel
⑮	Rod end nut	Rolled steel for general structural use

No.	Parts	Materials
⑯	Rod seal	Urethane rubber
⑰	Piston seal	Synthetic rubber (NBR)
⑱	Cushion seal	Synthetic rubber (NBR)
⑲	Cushion gasket	Synthetic rubber (NBR)
⑳	Tube gasket	Synthetic rubber (NBR)
㉑	Spring pin	Carbon steel for machine structural use
—	Foot mounting bracket	Rolled steel for general structural use
—	Axial foot mounting bracket	Cast iron
—	Flange mounting bracket	Rolled steel for general structural use
—	Clevis mounting bracket	Cast iron
—	Clevis supporting bracket	Cast iron
—	Pivot mounting bracket	Cast iron
—	Trunnion bracket	Cast iron
—	Trunnion supporting bracket	Cast iron
—	Knuckles	Cast iron

Seals

Parts	Rod seal	Piston seal	Cushion seal	Tube gasket	Cushion gasket
Bore size mm / Quantity	1★	1★	2	2★	2
40	PGR14A	PWP40N	CPF20	1.5×40	S5
50	PGR19	PWP50N	CPF24	1.5×50	S6
63	PGR19	PWP63N	CPF24	1.5×63	S6
80	PGR23	PWP80N	CPF30	1.5×80	S6
100	PGR23	PWP100N	CPF35	1.5×100	S6

Remark: Items marked with a star (★) are available as repair kits.
Order codes: For non-rotating cylinders··· SRK-NDDAL Bore size

Mass

kg [lb.]

Bore size mm [in.]	Zero stroke mass									Additional mass for each 1mm [0.0394in.] stroke	Mass of 1 sensor switch [with holder]		Mass of knuckle	
	Basic type	Foot mounting type	Axial foot mounting type	Flange mtg. type	Clevis mtg. type	Clevis mtg. type (w. supporting bkt.)	Pivot mounting type	Trunnion type	Trunnion type (w. supporting bkt.)		ZC□□□ CS□T Note	CS□F	Y type knuckle (with pin)	I type knuckle
40 [1.575]	0.65 [1.43] (0.69 [1.52])	0.78 [1.72] (0.82 [1.81])	0.85 [1.87] (0.89 [1.96])	1.02 [2.25] (1.06 [2.34])	0.92 [2.03] (0.96 [2.12])	1.62 [3.57] (1.66 [3.66])	0.83 [1.83] (0.87 [1.92])	1.13 [2.49] (1.17 [2.58])	1.63 [3.59] (1.67 [3.68])	0.00276 [0.00609] (0.00407 [0.00897])	0.04 [0.09]	0.05 [0.11]	0.27 [0.60]	0.16 [0.35]
50 [1.969]	1.02 [2.25] (1.08 [2.38])	1.19 [2.62] (1.25 [2.76])	1.34 [2.95] (1.40 [3.09])	1.41 [3.11] (1.47 [3.24])	1.41 [3.11] (1.47 [3.24])	2.11 [4.65] (2.17 [4.78])	1.28 [2.82] (1.34 [2.95])	1.57 [3.46] (1.63 [3.59])	2.07 [4.56] (2.13 [4.70])	0.00425 [0.00937] (0.00632 [0.01394])			0.34 [0.75]	0.21 [0.46]
63 [2.480]	1.36 [3.00] (1.44 [3.18])	1.59 [3.51] (1.67 [3.68])	1.88 [4.15] (1.95 [4.32])	1.89 [4.17] (1.97 [4.34])	1.84 [4.06] (1.92 [4.23])	2.54 [5.60] (2.62 [5.78])	1.78 [3.92] (1.86 [4.10])	2.06 [4.54] (2.14 [4.72])	2.56 [5.64] (2.64 [5.82])	0.00512 [0.01129] (0.00770 [0.01698])	0.04 [0.09]	0.06 [0.13]	0.34 [0.75]	0.21 [0.46]
80 [3.150]	2.32 [5.12] (2.49 [5.49])	2.70 [5.95] (2.87 [6.33])	3.17 [6.99] (3.34 [7.36])	3.92 [8.64] (4.09 [9.02])	3.24 [7.14] (3.41 [7.52])	3.96 [8.73] (4.13 [9.11])	3.40 [7.50] (3.57 [7.87])	3.48 [7.67] (3.65 [8.05])	4.20 [9.26] (4.37 [9.64])	0.00810 [0.01786] (0.01278 [0.02818])			0.87 [1.92]	0.62 [1.37]
100 [3.940]	2.94 [6.48] (3.15 [6.95])	3.41 [7.52] (3.62 [7.98])	4.22 [9.31] (4.43 [9.77])	5.16 [11.38] (5.37 [11.84])	4.18 [9.22] (4.39 [9.68])	4.90 [10.80] (5.11 [11.27])	4.33 [9.55] (4.54 [10.01])	4.47 [9.86] (4.68 [10.32])	5.19 [11.44] (5.40 [11.91])	0.00869 [0.01916] (0.01450 [0.03197])			0.87 [1.92]	0.62 [1.37]

Note: For lead wire length A (1000mm [39in.]).
Remark: Figures in parentheses ( ) are for steel tube specification.

Calculation example: For foot mounting type with bore size of 50mm, and stroke of 100mm, 1.19+(0.00425×100)=1.615kg [3.561lb.]

Dimensions of Basic Type (mm)

DDAL Bore size × Stroke

CAD DDAL Bore size

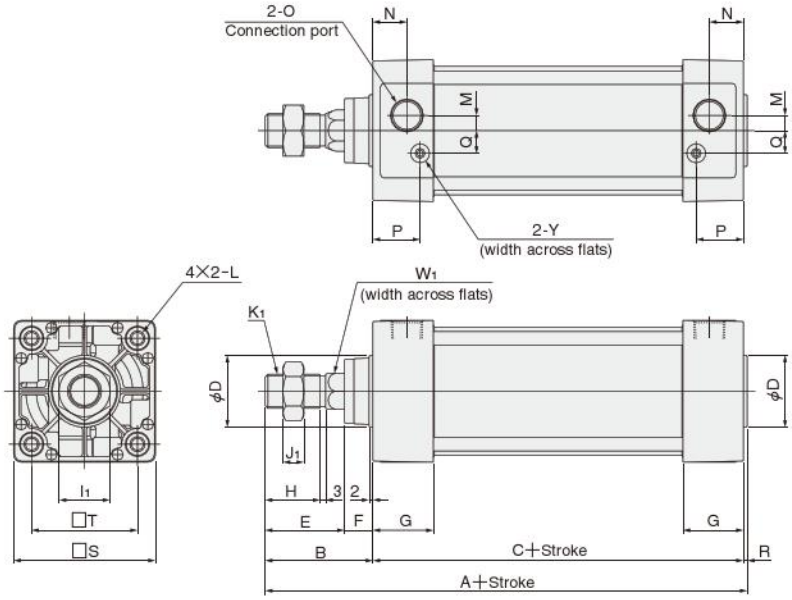

Bore mm [in.] / Code	A	B	C	D	E	F	G	H	I_1	J_1	K_1
40 [1.575]	144	49	93	32	34	15	31	21	19	7	M12×1.25
50 [1.969]	152	57	93	38	42	15	31	29	27	11	M18×1.5
63 [2.480]	155	57	96	38	42	15	32	29	27	11	M18×1.5
80 [3.150]	185	75	108	44	54	21	36	37	32	13	M22×1.5
100 [3.940]	185	75	108	50	54	21	36	37	32	13	M22×1.5

Bore mm [in.] / Code	L	M	N	O	P	Q	R	S	T	W_1	Y
40 [1.575]	M 6×1 Depth 14	4	18	Rc1/4	25.5	10	2	50	37	14	2.5
50 [1.969]	M 6×1 Depth 14	7	18	Rc3/8	24	12	2	62	47	19	3
63 [2.480]	M 8×1.25 Depth 14	8	18	Rc3/8	25	12	2	75	56	19	3
80 [3.150]	M10×1.5 Depth 15	11	20	Rc1/2	29	16	2	94	70	23	3
100 [3.940]	M10×1.5 Depth 15	12	20	Rc1/2	29	18	2	112	84	23	3

Dimensions of Foot Mounting Type (mm)

DDAL Bore size × Stroke **-1**

CAD Foot mounting bracket only DDA Bore size -1

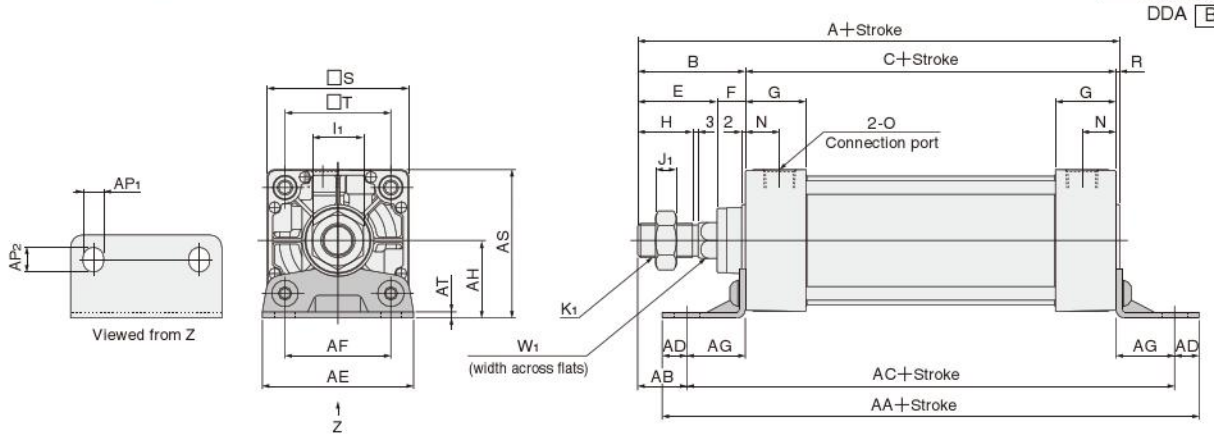

Bore mm [in.] \ Code	A	B	C	E	F	G	H	I_1	J_1	K_1	N	O	R	S	T	W_1
40 [1.575]	144	49	93	34	15	31	21	19	7	M12×1.25	18	Rc1/4	2	50	37	14
50 [1.969]	152	57	93	42	15	31	29	27	11	M18×1.5	18	Rc3/8	2	62	47	19
63 [2.480]	155	57	96	42	15	32	29	27	11	M18×1.5	18	Rc3/8	2	75	56	19
80 [3.150]	185	75	108	54	21	36	37	32	13	M22×1.5	20	Rc1/2	2	94	70	23
100 [3.940]	185	75	108	54	21	36	37	32	13	M22×1.5	20	Rc1/2	2	112	84	23

Bore mm [in.] \ Code	AA	AB	AC	AD	AE	AF	AG	AH	AP_1	AP_2	AS	AT
40 [1.575]	165	25.5	140	12.5	57	36	23.5	30	11	13	55	3.2
50 [1.969]	173	29	149	12	68	47	28	36.5	11	13	67.5	3.2
63 [2.480]	184	26	158	13	80	56	31	41	11	13	78.5	3.2
80 [3.150]	200	45	168	16	97	70	30	49	14	16	96	4
100 [3.940]	200	45	168	16	112	84	30	57	14	16	113	4

Dimensions of Axial Foot Mounting Type (mm)

DDAL Bore size × Stroke **-2**

CAD Axial foot mounting bracket only DDA Bore size -2

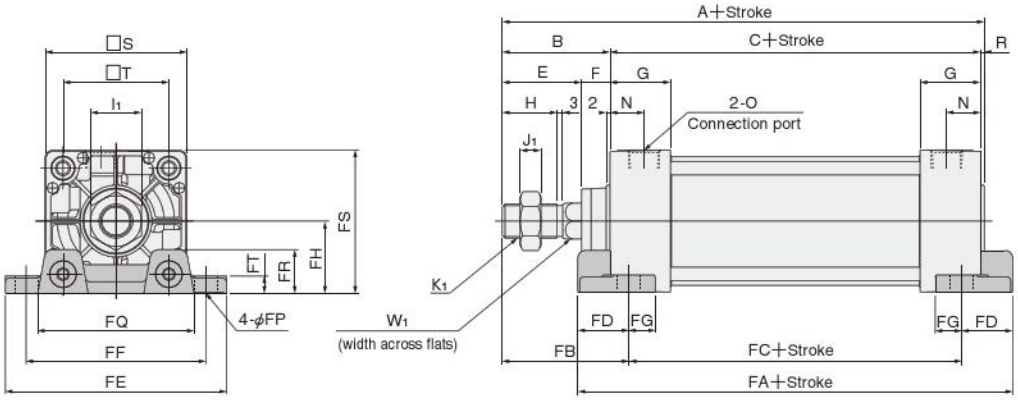

Bore mm [in.] \ Code	A	B	C	E	F	G	H	I_1	J_1	K_1	N	O	R	S	T	W_1
40 [1.575]	144	49	93	34	15	31	21	19	7	M12×1.25	18	Rc1/4	2	50	37	14
50 [1.969]	152	57	93	42	15	31	29	27	11	M18×1.5	18	Rc3/8	2	62	47	19
63 [2.480]	155	57	96	42	15	32	29	27	11	M18×1.5	18	Rc3/8	2	75	56	19
80 [3.150]	185	75	108	54	21	36	37	32	13	M22×1.5	20	Rc1/2	2	94	70	23
100 [3.940]	185	75	108	54	21	36	37	32	13	M22×1.5	20	Rc1/2	2	112	84	23

Bore mm [in.] \ Code	FA	FB	FC	FD	FE	FF	FG	FH	FP	FQ	FR	FS	FT
40 [1.575]	119	59	73	23	92	70	14	25	12	58	16	50	8
50 [1.969]	123	67	73	25	105	83	14	31	12	68	17	62	9
63 [2.480]	130	67	76	27	117	95	14	38	12	84	22	75.5	9
80 [3.150]	150	88	82	34	147	121	18	47	14	104	28	94	13
100 [3.940]	158	88	82	38	168	140	18	57	14	120	30	113	14

Dimensions of Rod Side Flange Mounting Type (mm)

DDAL Bore size × Stroke **-3**

CAD Flange mounting bracket only
DDA Bore size -3

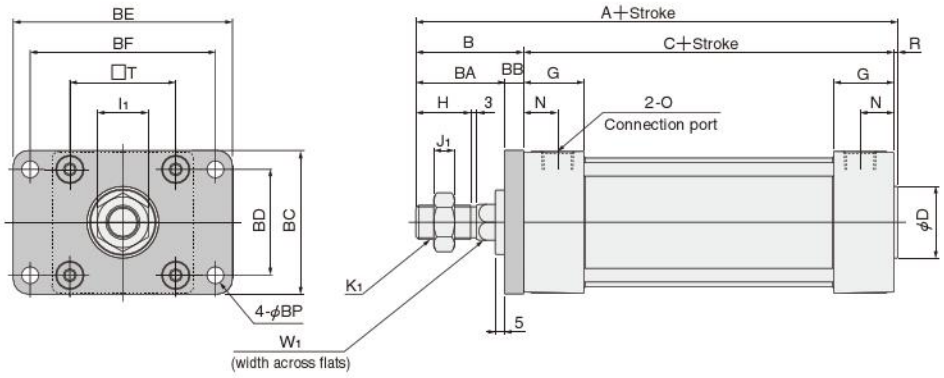

Bore mm [in.] \ Code	A	B	C	D	G	H	I_1	J_1	K_1	N	O	R	T	W_1
40 [1.575]	144	49	93	32	31	21	19	7	M12×1.25	18	Rc1/4	2	37	14
50 [1.969]	152	57	93	38	31	29	27	11	M18×1.5	18	Rc3/8	2	47	19
63 [2.480]	155	57	96	38	32	29	27	11	M18×1.5	18	Rc3/8	2	56	19
80 [3.150]	185	75	108	44	36	37	32	13	M22×1.5	20	Rc1/2	2	70	23
100 [3.940]	185	75	108	50	36	37	32	13	M22×1.5	20	Rc1/2	2	84	23

Bore mm [in.] \ Code	BA	BB	BC	BD	BE	BF	BP
40 [1.575]	39	10	52	36	84	70	7
50 [1.969]	47	10	65	47	104	86	9
63 [2.480]	47	10	76	56	116	98	9
80 [3.150]	59	16	95	70	143	119	12
100 [3.940]	59	16	115	84	162	138	12

Dimensions of Head Side Flange Mounting Type (mm)

DDAL Bore size × Stroke **-5**

CAD Flange mounting bracket only
DDA Bore size -3

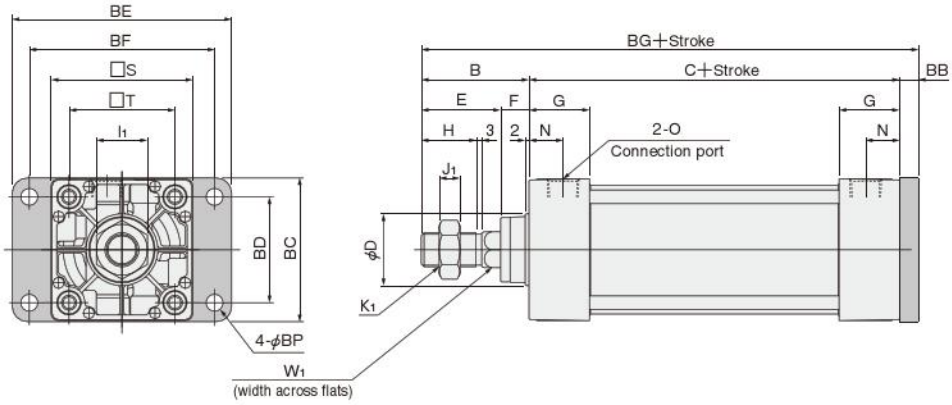

Bore mm [in.] \ Code	B	C	D	E	F	G	H	I_1	J_1	K_1	N	O	S	T	W_1
40 [1.575]	49	93	32	34	15	31	21	19	7	M12×1.25	18	Rc1/4	50	37	14
50 [1.969]	57	93	38	42	15	31	29	27	11	M18×1.5	18	Rc3/8	62	47	19
63 [2.480]	57	96	38	42	15	32	29	27	11	M18×1.5	18	Rc3/8	75	56	19
80 [3.150]	75	108	44	54	21	36	37	32	13	M22×1.5	20	Rc1/2	94	70	23
100 [3.940]	75	108	50	54	21	36	37	32	13	M22×1.5	20	Rc1/2	112	84	23

Bore mm [in.] \ Code	BB	BC	BD	BE	BF	BG	BP
40 [1.575]	10	52	36	84	70	152	7
50 [1.969]	10	65	47	104	86	160	9
63 [2.480]	10	76	56	116	98	163	9
80 [3.150]	16	95	70	143	119	199	12
100 [3.940]	16	115	84	162	138	199	12

Dimensions of Clevis Mounting Type (mm)

DDAL Bore size × Stroke **-7**

CAD Clevis mounting bracket only DDA Bore size -7

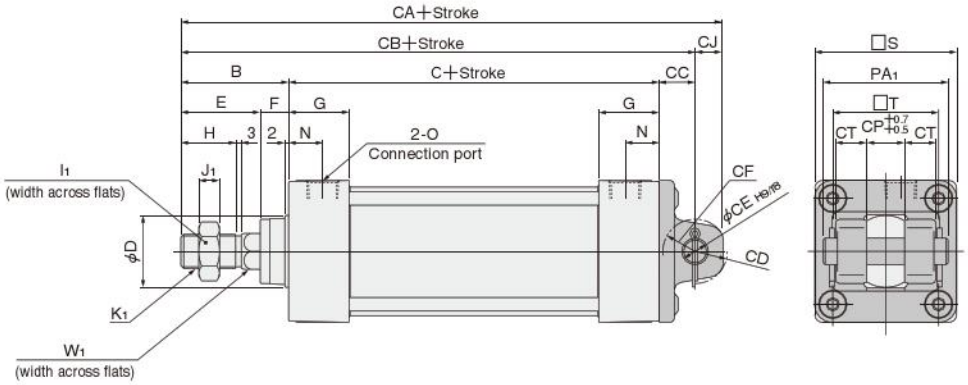

Bore mm [in.] \ Code	B	C	D	E	F	G	H	I1	J1	K1	N	O	S	T	W1
40 [1.575]	49	93	32	34	15	31	21	19	7	M12×1.25	18	Rc1/4	50	37	14
50 [1.969]	57	93	38	42	15	31	29	27	11	M18×1.5	18	Rc3/8	62	47	19
63 [2.480]	57	96	38	42	15	32	29	27	11	M18×1.5	18	Rc3/8	75	56	19
80 [3.150]	75	108	44	54	21	36	37	32	13	M22×1.5	20	Rc1/2	94	70	23
100 [3.940]	75	108	50	54	21	36	37	32	13	M22×1.5	20	Rc1/2	112	84	23

Bore mm [in.] \ Code	CA	CB	CC	CD	CE	CF	CJ	CP	CT	PA1
40 [1.575]	174	161	19	R15	14	R17	13	20	12.5	58
50 [1.969]	184	169	19	R17	14	R17	15	20	16.5	66
63 [2.480]	187	172	19	R17	14	R17	15	20	16.5	66
80 [3.150]	236	215	32	R24	20	R30	21	32	17.5	78
100 [3.940]	236	215	32	R24	20	R30	21	32	17.5	78

● With Supporting Bracket DDAL Bore size × Stroke -7-7C

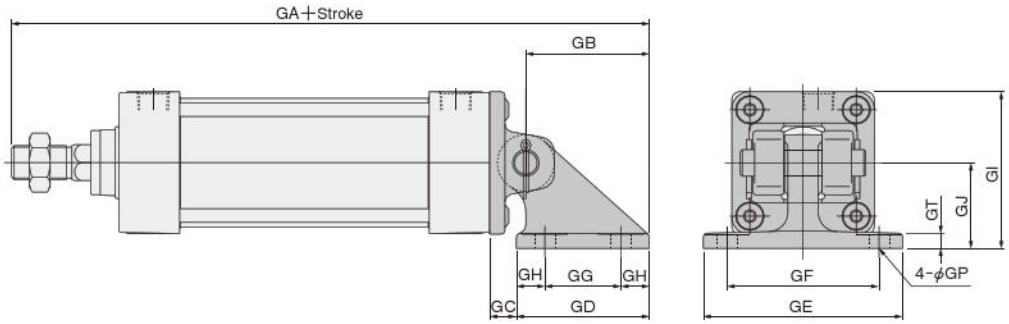

Bore mm [in.] \ Code	GA	GB	GC	GD	GE	GF	GG	GH	GI	GJ	GP	GT
40 [1.575]	227.5	66.5	12.5	73	105	80	40	16.5	70	45	11(Thru hole)	8
50 [1.969]	235.5	66.5	12.5	73	105	80	40	16.5	76	45	11(Thru hole)	8
63 [2.480]	238.5	66.5	12.5	73	105	80	40	16.5	82.5	45	11(Thru hole)	8
80 [3.150]	301.5	86.5	20.5	98	135	105	65	16.5	107	60	14(Thru hole)	12
100 [3.940]	301.5	86.5	20.5	98	135	105	65	16.5	116	60	14(Thru hole)	12

Dimensions of Pivot Mounting Type (mm)

DDAL Bore size × Stroke **-8**

CAD Pivot mounting bracket only
DDA Bore size -8

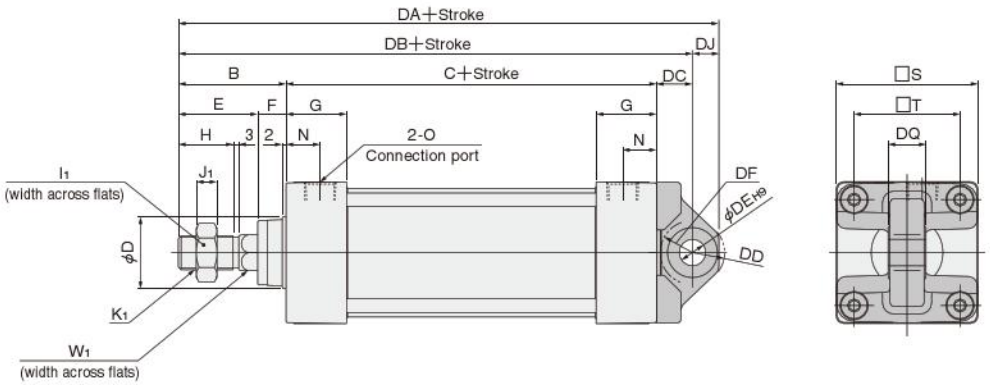

Bore mm [in.] \ Code	B	C	D	E	F	G	H	I1	J1	K1	N	O	S	T	W1
40 [1.575]	49	93	32	34	15	31	21	19	7	M12×1.25	18	Rc1/4	50	37	14
50 [1.969]	57	93	38	42	15	31	29	27	11	M18×1.5	18	Rc3/8	62	47	19
63 [2.480]	57	96	38	42	15	32	29	27	11	M18×1.5	18	Rc3/8	75	56	19
80 [3.150]	75	108	44	54	21	36	37	32	13	M22×1.5	20	Rc1/2	94	70	23
100 [3.940]	75	108	50	54	21	36	37	32	13	M22×1.5	20	Rc1/2	112	84	23

Bore mm [in.] \ Code	DA	DB	DC	DD	DE	DF	DJ	DQ
40 [1.575]	175	161	19	R17	14	R17	14	$20^{0}_{-0.084}$
50 [1.969]	183	169	19	R17	14	R17	14	$20^{0}_{-0.084}$
63 [2.480]	186	172	19	R17	14	R17	14	$20^{0}_{-0.084}$
80 [3.150]	236	215	32	R24	20	R25	21	$32^{0}_{-0.100}$
100 [3.940]	235	215	32	R24	20	R26	20	$32^{0}_{-0.100}$

Dimensions of Trunnion Type (mm)

DDAL Bore size × Stroke **-11**

CAD Trunnion bracket only
DDA Bore size -11

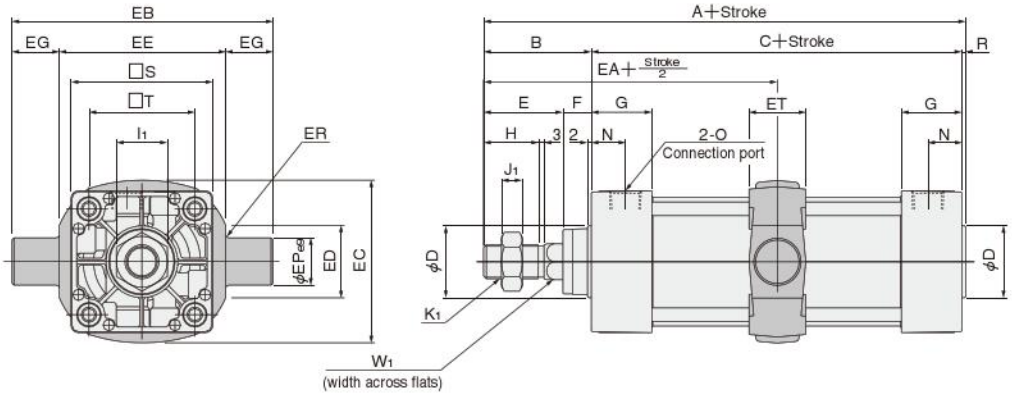

Bore mm [in.] \ Code	A	B	C	D	E	F	G	H	I1	J1	K1	N	O	R	S	T	W1
40 [1.575]	144	49	93	32	34	15	31	21	19	7	M12×1.25	18	Rc1/4	2	50	37	14
50 [1.969]	152	57	93	38	42	15	31	29	27	11	M18×1.5	18	Rc3/8	2	62	47	19
63 [2.480]	155	57	96	38	42	15	32	29	27	11	M18×1.5	18	Rc3/8	2	75	56	19
80 [3.150]	185	75	108	44	54	21	36	37	32	13	M22×1.5	20	Rc1/2	2	94	70	23
100 [3.940]	185	75	108	50	54	21	36	37	32	13	M22×1.5	20	Rc1/2	2	112	84	23

Bore mm [in.] \ Code	EA	EB	EC	ED	EE	EG	EP	ER	ET
40 [1.575]	95.5	113	60	30	63	25	25	R1.6	30
50 [1.969]	103.5	126	72	30	76	25	25	R1.6	30
63 [2.480]	105	138	87	40	88	25	25	R1.6	30
80 [3.150]	129	164	105	40	114	25	25	R1.6	35
100 [3.940]	129	182	129	44	132	25	25	R2	40

●With Supporting Brackets DDAL Bore size × Stroke -11-11T

CAD Trunnion supporting bracket only
DDA Bore size -11T

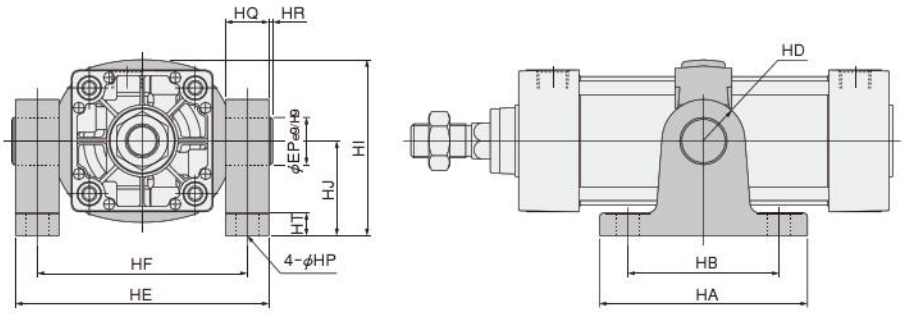

Bore mm [in.] \ Code	HA	HB	HD	HE	HF	HI	HJ	HP	HQ	HR	HT	EP
40 [1.575]	111	80	R22	109	86	80	50	12(Thru hole)	23	2	14	25
50 [1.969]	111	80	R22	122	99	86	50	12(Thru hole)	23	2	14	25
63 [2.480]	111	80	R22	134	111	93.5	50	12(Thru hole)	23	2	14	25
80 [3.150]	121	85	R22	160	137	122.5	70	14(Thru hole)	23	2	14	25
100 [3.940]	121	85	R22	178	155	134.5	70	14(Thru hole)	23	2	14	25

DYNA DOUBLE ROD CYLINDERS

Symbol

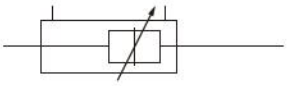

Specifications

Item / Bore size mm [in.]	32 [1.260]	40 [1.575]	50 [1.969]	63 [2.480]	80 [3.150]	100 [3.940]	125 [4.921]
Operation type	Double acting type						
Media	Air						
Mounting type	Basic type, Foot type, Axial foot type, Flange type, Trunnion type						
Operating pressure range MPa [psi.]	0.1～1.0 [15～145]						
Proof pressure MPa [psi.]	1.5 [218]						
Operating temperature range °C [°F]	—10～70 [14～158] (Freezing prohibited, With sensor is 0～60 [32～140].)						
Operating speed range mm/s [in./sec.]	50～800 [2.0～31.5]	50～700 [2.0～27.6]					
Cushion	Variable cushion at both ends of stroke						
Cushion stroke mm [in.]	16 [0.630]		20 [0.787]		25 [0.984]		
Lubrication	Not required (If lubrication is required, use Turbine Oil Class 1 (ISO VG32) or equivalent.)						
Port size Rc	1/8	1/4	3/8		1/2		

Bore Size and Stroke

mm

Bore size	Standard strokes	Maximum available stroke
32	50, 75, 100, 150, 200, 250, 300, 350, 400, 450, 500	500
40	50, 75, 100, 150, 200, 250, 300, 350, 400, 450, 500 600, 700, 800	800
50		
63		
80	50, 75, 100, 150, 200, 250, 300, 350, 400, 450, 500 600, 700, 800, 900, 1000	1000
100		
125		

Remarks: 1. Stroke tolerance;
Strokes of 250 or less: $^{+1}_{0}$ [$^{+0.039in.}_{0}$]
Strokes of 251～1000: $^{+1.5}_{0}$ [$^{+0.059in.}_{0}$]
2. For non-standard strokes, consult us.
3. For the maximum available stroke with bellows specification, see p.538.

Order Codes

DDA [ ] [**50×100**] – [ ] – [ ] – [ ] – [ ] [ ] [ ]

Bore size × Stroke

Cylinder specification
D —— Double rod cylinder
DJ —— Double rod cylinder with bellows

Types of bellows
JT —— Nylon tarpaulin (～80°C [176°F])
JC —— Chloroprene (～100°C [212°F])
JK —— Conex (～200°C [392°F])
JA —— Alumix (～250°C [482°F])
●Mounted on both sides.
●Conex is a registered trademark of Teijin, Inc.
●The temperatures shown are the bellows' own durable temperatures, and are not temperatures for cylinder use.

DYNA Cylinder Basic model

Mounting type
Blank — Basic type
1 —— Foot mounting type
2 —— Axial foot mounting type
3 —— Flange mounting type
11 —— Trunnion type
11-11T — Trunnion type (with supporting brackets)
●Mounting brackets are already assembled at shipping.
●Orders for mounting brackets only are also accepted.

Sensor switch (For cylinder with magnet)

ZC130	2-lead wire	Solid state type	with indicator lamp	DC10～28V
ZC153	3-lead wire	Solid state type	with indicator lamp	DC4.5～28V
CS5T	2-lead wire	Reed switch type	without indicator lamp	DC5～28V AC85～115V
CS11T	2-lead wire	Reed switch type	with indicator lamp	DC10～28V
CS2F	DIN type	Reed switch type	with indicator lamp	AC85～230V
CS3F	DIN type	Reed switch type	with indicator lamp	DC10～30V
CS4F	DIN type	Reed switch type	with indicator lamp	DC10～30V
CS5F	DIN type	Reed switch type	without indicator lamp	DC3～30V

●For mounting location of sensor switch, see p.534.
●**CS□F** comes with a DIN connector. All others are grommet type.
●Orders for sensor switches only are also accepted.

Rod end accessory
Blank — No rod end accessory
Y —— With Y type knuckle (with pin)
I —— With I type knuckle
●Rod end accessory for one side is included at shipping. If required for both sides, order separately. For order code, see p.538.
●For the cylinder joint and cylinder rod end, see p.1568.
●Orders for rod end accessories only are also accepted.
●For dimensions of rod end accessories, see p.537.

Lead wire length
(Applicable only to **ZC,CS□T** types)
A : 1000mm [39in.]
B : 3000mm [118in.]

Number of sensor switches
1 —— With 1 sensor switch
2 —— With 2 sensor switches
⋮ ⋮
n —— With n sensor switches

Inner Construction and Major Parts

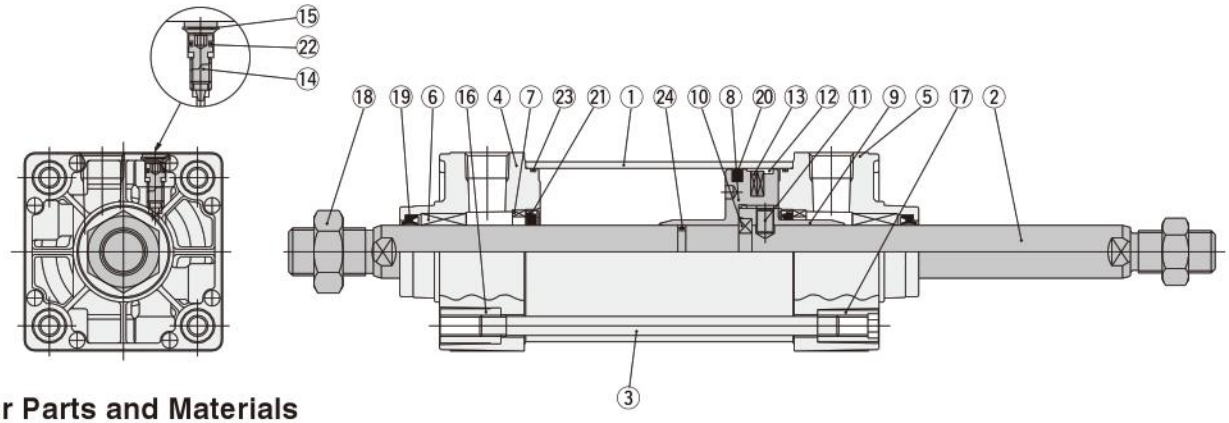

Major Parts and Materials

No.	Parts	Materials
①	Cylinder tube	Aluminum alloy
②	Piston rod	φ32:Stainless steel, φ40～φ125:Carbon steel for machine structural use
③	Tie rod	Carbon steel for machine structural use
④	Rod cover	Aluminum die-casting
⑤	Rod cover D	Aluminum die-casting
⑥	Rod bushing	Oil impregnated sintered copper alloy
⑦	Keep ring	Aluminum alloy
⑧	Piston A	Aluminum alloy
⑨	Cushion ring D[Note 1]	Aluminum alloy
⑩	Split ring	Carbon steel for machine structural use
⑪	Pin	Carbon steel for machine structural use
⑫	Wear ring	Plastic
⑬	Magnet	Rubber magnet
⑭	Cushion needle	Carbon steel for machine structural use
⑮	Snap ring	Spring steel
⑯	Tie rod nut R	Rolled steel for general structural use

No.	Parts	Materials
⑰	Tie rod nut H	Chrome-molybdenum steel
⑱	Rod end nut	Rolled steel for general structural use
⑲	Rod seal	Synthetic rubber (NBR)
⑳	Piston seal	Synthetic rubber (NBR)
㉑	Cushion seal	Synthetic rubber (NBR)
㉒	Cushion gasket	Synthetic rubber (NBR)
㉓	Tube gasket	Synthetic rubber (NBR)
㉔	Piston gasket	Synthetic rubber (NBR)
—	Foot mounting bracket	Rolled steel for general structural use
—	Axial foot mounting bracket	Cast iron
—	Flange mounting bracket	Rolled steel for general structural use
—	Trunnion bracket	Cast iron
—	Trunnion supporting bracket	Cast iron
—	Knuckles	Cast iron [Note 2]

Notes: 1. Piston B for φ32～φ50, cushion ring D for φ63～φ125.
2: Only the I knuckle for φ125 is carbon steel for machine structural use.

Seals

Parts / Bore size mm \ Quantity	Rod seal	Piston seal	Cushion seal	Tube gasket	Piston gasket	Cushion gasket
	2★	1★	2	2★	1	2
32	DRP12	PWP32N	CPF15	1.5×32	P9	S5
40	DRP16	PWP40N	CPF20	1.5×40	P12	S5
50	DRP20	PWP50N	CPF24	1.5×50	P16	S6
63	DRP20	PWP63N	CPF24	1.5×63	P16	S6
80	DRP25	PWP80N	CPF30	1.5×80	P21	S6
100	DRP30	PWP100N	CPF35	1.5×100	G25	S6
125	DRP35	PWP125N	CPF45	1.5×125	G30	S7

Remark: Items marked with a star (★) are available as repair kits.
Order codes: For double rod cylinders…SRK-NDDAD Bore size

Mass

kg [lb.]

Bore size mm [in.]	Zero stroke mass						Additional mass for each 1mm [0.0394in.] stroke	Mass of 1 sensor switch [w. holder]		Mass of knuckle	
	Basic type	Foot mounting type	Axial foot mounting type	Flange mounting type	Trunnion type	Trunnion type (with supporting brackets)		ZC□□□ CS□T [Note]	CS□F	Y type knuckle (with pin)	I type knuckle
32 [1.260]	0.68 [1.50]	0.79 [1.74]	0.82 [1.81]	0.88 [1.94]	0.98 [2.16]	1.20 [2.65]	0.00306 [0.00675]	0.04 [0.09]	0.05 [0.11]	0.22 [0.49]	0.16 [0.35]
40 [1.575]	0.84 [1.85]	0.97 [2.14]	1.04 [2.29]	1.21 [2.67]	1.32 [2.91]	1.82 [4.01]	0.00457 [0.01008]			0.27 [0.60]	0.16 [0.35]
50 [1.969]	1.35 [2.98]	1.52 [3.35]	1.67 [3.68]	1.74 [3.84]	1.90 [4.19]	2.40 [5.29]	0.00673 [0.01484]			0.34 [0.75]	0.21 [0.46]
63 [2.480]	1.86 [4.10]	2.09 [4.61]	2.38 [5.25]	2.39 [5.27]	2.56 [5.64]	3.06 [6.75]	0.00760 [0.01676]	0.04 [0.09]	0.06 [0.13]	0.34 [0.75]	0.21 [0.46]
80 [3.150]	3.16 [6.97]	3.54 [7.81]	4.01 [8.84]	4.76 [10.50]	4.32 [9.53]	5.04 [11.11]	0.01217 [0.02683]			0.87 [1.92]	0.62 [1.37]
100 [3.940]	4.22 [9.31]	4.69 [10.34]	5.50 [12.13]	6.44 [14.20]	5.75 [12.68]	6.47 [14.27]	0.01612 [0.03554]			1.47 [3.24]	1.24 [2.73]
125 [4.921]	9.48 [20.90]	9.95 [21.94]	10.86 [23.95]	12.35 [27.23]	12.89 [28.42]	14.44 [31.84]	0.02240 [0.04939]	0.046 [0.101]	0.066 [0.146]	1.47 [3.24]	1.24 [2.73]

Note: For lead wire length A (1000mm [39in.]).

Calculation example: For foot mounting type with bore size of 50mm, and stroke of 100mm, 1.52+(0.00673×100)=2.193kg [4.836lb.]

Dimensions of Basic Type (mm)

DDAD Bore size × Stroke

CAD DDAD Bore size

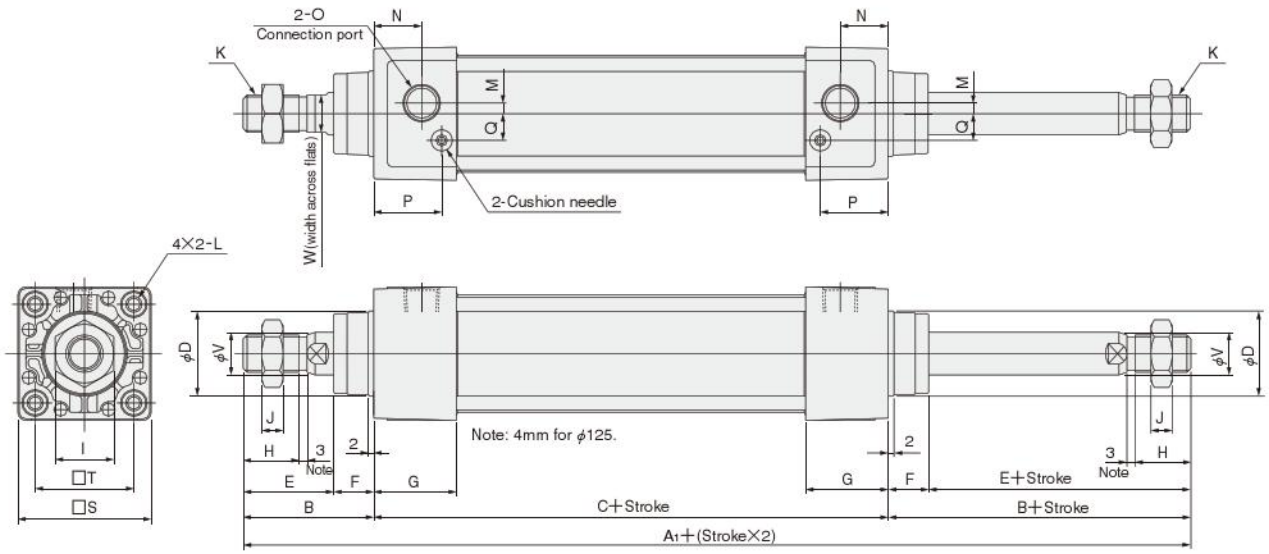

Bore mm[in] \ Code	A_1	B	C	D	E	F	G	H	I	J	K	L	
32 [1.260]	187	47	93	26	32	15	31	19	17	6	M10×1.25	M 6×1	Depth 14
40 [1.575]	191	49	93	32	34	15	31	21	22	8	M14×1.5	M 6×1	Depth 14
50 [1.969]	207	57	93	38	42	15	31	29	27	11	M18×1.5	M 6×1	Depth 14
63 [2.480]	210	57	96	38	42	15	32	29	27	11	M18×1.5	M 8×1.25	Depth 14
80 [3.150]	258	75	108	44	54	21	36	37	32	13	M22×1.5	M10×1.5	Depth 15
100 [3.940]	258	75	108	50	54	21	36	37	36	14	M26×1.5	M10×1.5	Depth 15
125 [4.921]	292	89	114	60	68	21	36	50	36	16	M27×2	M12×1.75	Depth 15

Bore mm[in] \ Code	M	N	O	P	Q	S	T	V	W
32 [1.260]	3	16	Rc1/8	25.5	7	44	33	12	10
40 [1.575]	4	18	Rc1/4	25.5	10	50	37	16	14
50 [1.969]	7	18	Rc3/8	24	12	62	47	20	17
63 [2.480]	8	18	Rc3/8	25	12	75	56	20	17
80 [3.150]	11	20	Rc1/2	29	16	94	70	25	21
100 [3.940]	12	20	Rc1/2	29	18	112	84	30	26
125 [4.921]	14	20	Rc1/2	29	20	136	104	35	32

Dimensions of Foot Mounting Type (mm)

DDAD Bore size × Stroke **-1**

CAD Foot mounting bracket only DDA Bore size -1

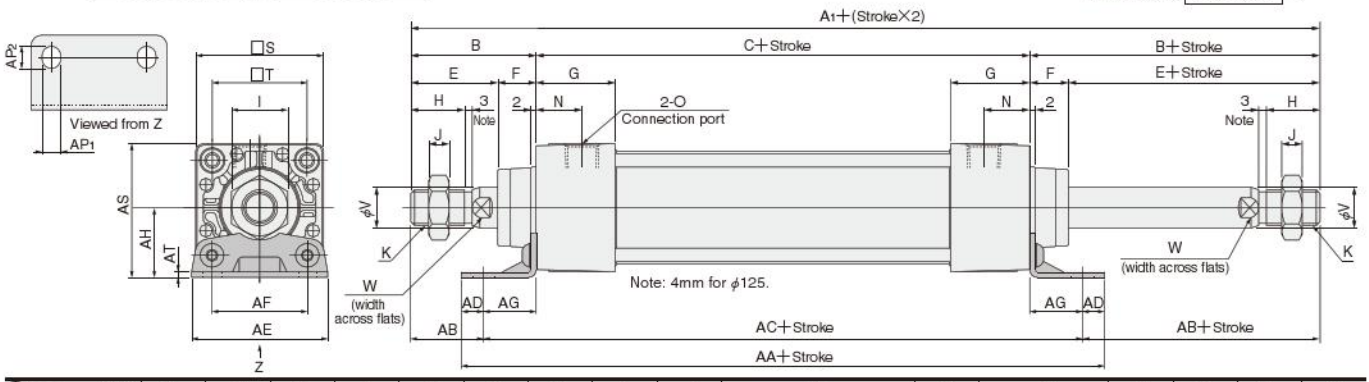

Bore mm [in.] \ Code	A1	B	C	E	F	G	H	I	J	K	N	O	S	T	V	W
32 [1.260]	187	47	93	32	15	31	19	17	6	M10×1.25	16	Rc1/8	44	33	12	10
40 [1.575]	191	49	93	34	15	31	21	22	8	M14×1.5	18	Rc1/4	50	37	16	14
50 [1.969]	207	57	93	42	15	31	29	27	11	M18×1.5	18	Rc3/8	62	47	20	17
63 [2.480]	210	57	96	42	15	32	29	27	11	M18×1.5	18	Rc3/8	75	56	20	17
80 [3.150]	258	75	108	54	21	36	37	32	13	M22×1.5	20	Rc1/2	94	70	25	21
100 [3.940]	258	75	108	54	21	36	37	36	14	M26×1.5	20	Rc1/2	112	84	30	26
125 [4.921]	292	89	114	68	21	36	50	36	16	M27×2	20	Rc1/2	136	104	35	32

Bore mm [in.] \ Code	AA	AB	AC	AD	AE	AF	AG	AH	AP1	AP2	AS	AT
32 [1.260]	153	26.5	134	9.5	50	33	20.5	28	9	11	50	3.2
40 [1.575]	165	25.5	140	12.5	57	36	23.5	30	11	13	55	3.2
50 [1.969]	173	29	149	12	68	47	28	36.5	11	13	67.5	3.2
63 [2.480]	184	26	158	13	80	56	31	41	11	13	78.5	3.2
80 [3.150]	200	45	168	16	97	70	30	49	14	16	96	4
100 [3.940]	200	45	168	16	112	84	30	57	14	16	113	4
125 [4.921]	220	54	184	18	136	104	35	70	18	20	138	6

Dimensions of Axial Foot Mounting Type (mm)

DDAD Bore size × Stroke **-2**

CAD Axial foot mounting bracket only DDA Bore size -2

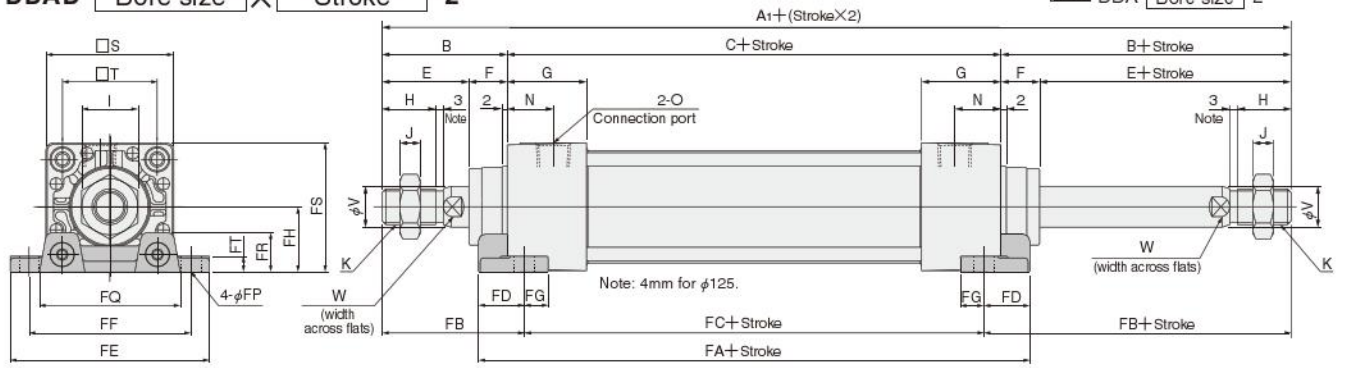

Bore mm [in.] \ Code	A1	B	C	E	F	G	H	I	J	K	N	O	S	T	V	W
32 [1.260]	187	47	93	32	15	31	19	17	6	M10×1.25	16	Rc1/8	44	33	12	10
40 [1.575]	191	49	93	34	15	31	21	22	8	M14×1.5	18	Rc1/4	50	37	16	14
50 [1.969]	207	57	93	42	15	31	29	27	11	M18×1.5	18	Rc3/8	62	47	20	17
63 [2.480]	210	57	96	42	15	32	29	27	11	M18×1.5	18	Rc3/8	75	56	20	17
80 [3.150]	258	75	108	54	21	36	37	32	13	M22×1.5	20	Rc1/2	94	70	25	21
100 [3.940]	258	75	108	54	21	36	37	36	14	M26×1.5	20	Rc1/2	112	84	30	26
125 [4.921]	292	89	114	68	21	36	50	36	16	M27×2	20	Rc1/2	136	104	35	32

Bore mm [in.] \ Code	FA	FB	FC	FD	FE	FF	FG	FH	FP	FQ	FR	FS	FT
32 [1.260]	119	57	73	23	81	63	14	22	9	54	14	44	8
40 [1.575]	119	59	73	23	92	70	14	25	12	58	16	50	8
50 [1.969]	123	67	73	25	105	83	14	31	12	68	17	62	9
63 [2.480]	130	67	76	27	117	95	14	38	12	84	22	75.5	9
80 [3.150]	150	88	82	34	147	121	18	47	14	104	28	94	13
100 [3.940]	158	88	82	38	168	140	18	57	14	120	30	113	14
125 [4.921]	172	106	80	46	213	175	21	69	18	144	35	137	18

Dimensions of Flange Mounting Type (mm)

DDAD Bore size × Stroke **-3**

CAD Flange mounting bracket only
DDA Bore size -3

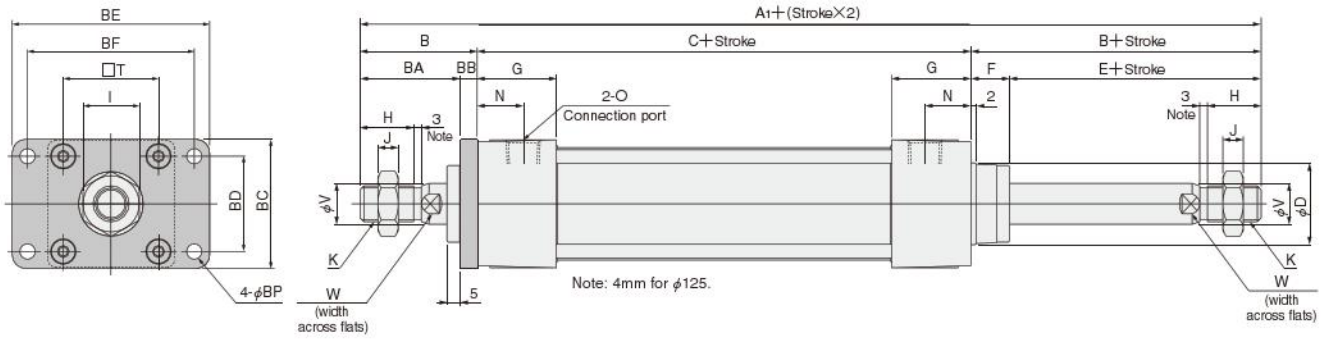

Bore mm[in.] \ Code	A1	B	C	D	E	F	G	H	I	J	K	N	O	T	V	W
32 [1.260]	187	47	93	26	32	15	31	19	17	6	M10×1.25	16	Rc1/8	33	12	10
40 [1.575]	191	49	93	32	34	15	31	21	22	8	M14×1.5	18	Rc1/4	37	16	14
50 [1.969]	207	57	93	38	42	15	31	29	27	11	M18×1.5	18	Rc3/8	47	20	17
63 [2.480]	210	57	96	38	42	15	32	29	27	11	M18×1.5	18	Rc3/8	56	20	17
80 [3.150]	258	75	108	44	54	21	36	37	32	13	M22×1.5	20	Rc1/2	70	25	21
100 [3.940]	258	75	108	50	54	21	36	37	36	14	M26×1.5	20	Rc1/2	84	30	26
125 [4.921]	292	89	114	60	68	21	36	50	36	16	M27×2	20	Rc1/2	104	35	32

Bore mm[in.] \ Code	BA	BB	BC	BD	BE	BF	BP
32 [1.260]	37	10	47	33	72	58	7
40 [1.575]	39	10	52	36	84	70	7
50 [1.969]	47	10	65	47	104	86	9
63 [2.480]	47	10	76	56	116	98	9
80 [3.150]	59	16	95	70	143	119	12
100 [3.940]	59	16	115	84	162	138	12
125 [4.921]	73	16	138	104	196	168	14

Dimensions of Trunnion Type (mm)

DDAD Bore size × Stroke **-11**

CAD Trunnion bracket only
DDA Bore size -11

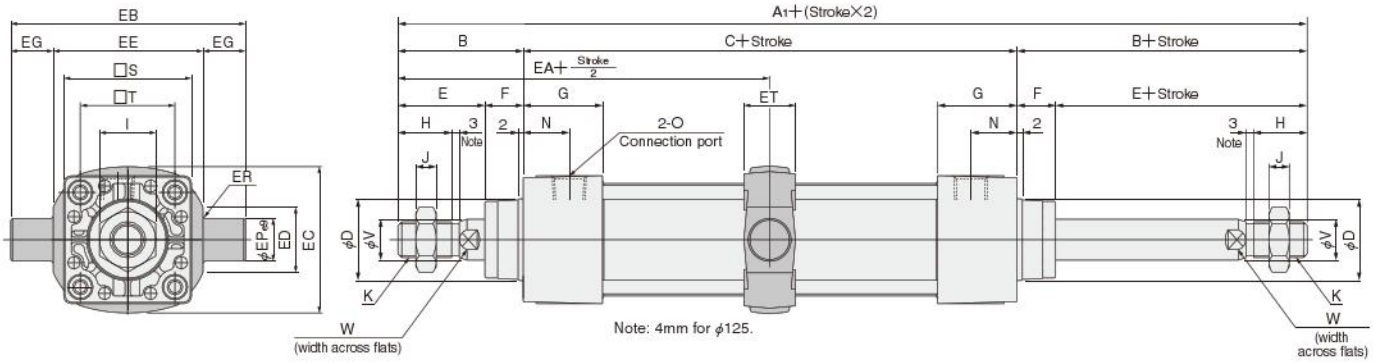

Bore mm [in.] \ Code	A1	B	C	D	E	F	G	H	I	J	K	N	O	S	T	V	W
32 [1.260]	187	47	93	26	32	15	31	19	17	6	M10×1.25	16	Rc1/8	44	33	12	10
40 [1.575]	191	49	93	32	34	15	31	21	22	8	M14×1.5	18	Rc1/4	50	37	16	14
50 [1.969]	207	57	93	38	42	15	31	29	27	11	M18×1.5	18	Rc3/8	62	47	20	17
63 [2.480]	210	57	96	38	42	15	32	29	27	11	M18×1.5	18	Rc3/8	75	56	20	17
80 [3.150]	258	75	108	44	54	21	36	37	32	13	M22×1.5	20	Rc1/2	94	70	25	21
100 [3.940]	258	75	108	50	54	21	36	37	36	14	M26×1.5	20	Rc1/2	112	84	30	26
125 [4.921]	292	89	114	60	68	21	36	50	36	16	M27×2	20	Rc1/2	136	104	35	32

Bore mm [in.] \ Code	EA	EB	EC	ED	EE	EG	EP	ER	ET
32 [1.260]	93.5	87	53	20	55	16	16	R1	30
40 [1.575]	95.5	113	60	30	63	25	25	R1.6	30
50 [1.969]	103.5	126	72	30	76	25	25	R1.6	30
63 [2.480]	105	138	87	40	88	25	25	R1.6	30
80 [3.150]	129	164	105	40	114	25	25	R1.6	35
100 [3.940]	129	182	129	44	132	25	25	R2	40
125 [4.921]	146	208	159	37.5	158	25	25	R2	43

●With Supporting Brackets DDAD Bore size × Stroke -11-11T

CAD Trunnion supporting bracket only
DDA Bore size -11T

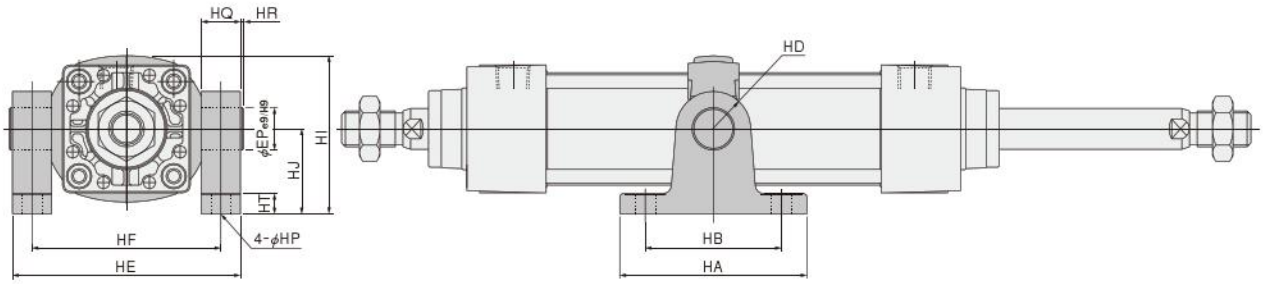

Bore mm [in.] \ Code	HA	HB	HD	HE	HF	HI	HJ	HP	HQ	HR	HT	EP
32 [1.260]	81	60	R16	85	70	66.5	40	9 (Thru hole)	15	1	12	16
40 [1.575]	111	80	R22	109	86	80	50	12 (Thru hole)	23	2	14	25
50 [1.969]	111	80	R22	122	99	86	50	12 (Thru hole)	23	2	14	25
63 [2.480]	111	80	R22	134	111	93.5	50	12 (Thru hole)	23	2	14	25
80 [3.150]	121	85	R22	160	137	122.5	70	14 (Thru hole)	23	2	14	25
100 [3.940]	121	85	R22	178	155	134.5	70	14 (Thru hole)	23	2	14	25
125 [4.921]	145	105	R30	208	183	164.5	85	18 (Thru hole)	25	0	27	25

DYNA NON-ROTATING DOUBLE ROD CYLINDERS

Symbol

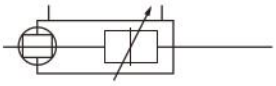

Specifications

Item / Bore size mm [in.]	40 [1.575]	50 [1.969]	63 [2.480]	80 [3.150]	100 [3.940]
Operation type	Double acting type				
Media	Air				
Mounting type	Basic type, Foot type, Axial foot type, Flange type, Trunnion type				
Operating pressure range MPa [psi.]	0.15～1.0 [22～145]				
Proof pressure MPa [psi.]	1.5 [218]				
Operating temperature range °C [°F]	—10～70 [14～158] (Freezing prohibited, With sensor is 0～60 [32～140].)				
Operating speed range mm/s [in./sec.]	50～500 [2.0～19.7]				
Cushion	Variable cushion at both ends of stroke				
Cushion stroke mm [in.]	16 [0.630]	20 [0.787]		25 [0.984]	
Lubrication	Not required (If lubrication is required, use Turbine Oil Class 1 (ISO VG32) or equivalent.)				
Non-rotating accuracy	±1°	±0.8°		±0.5°	
Allowable torque N·m [ft·lbf]	1 [0.74]	3.4 [2.51]		10 [7.38]	
Port size Rc	1/4	3/8		1/2	

Bore Size and Stroke

mm

Bore size	Standard strokes	Maximum available stroke
40	50, 75, 100, 150, 200, 250, 300, 350, 400, 450, 500	500
50		
63		
80		
100		

Remarks: 1. Stroke tolerance;
Strokes of 250 or less: $^{+1}_{0}$ [$^{+0.039}_{0}$ in.]
Strokes of 251～500: $^{+1.5}_{0}$ [$^{+0.059}_{0}$ in.]
2. For non-standard strokes, consult us.
3. For the maximum available stroke with bellows specification, see p.538.

Order Codes

DDA [ ] [**50×100**] – [ ] – [ ] – [ ] – [ ] – [ ] [ ] [ ]

Bore size × Stroke

Types of bellows
- **JT** —— Nylon tarpaulin (～80°C [176°F])
- **JC** —— Chloroprene (～100°C [212°F])
- **JK** —— Conex (～200°C [392°F])
- **JA** —— Alumix (～250°C [482°F])
- ●Conex is a registered trademark of Teijin, Inc.
- ●The temperatures shown are the bellows' own durable temperatures, and are not temperatures for cylinder use.

Tube material
- **Blank** — Standard
- **FT** —— Steel tube specification (Not available for cylinder with magnet.)

Cylinder specification
- **DL** —— Non-rotating double rod cylinder
- **DJL** —— Non-rotating double rod cylinder with bellows

DYNA Cylinder Basic model

Mounting type
- **Blank** — Basic type
- **1** —— Foot mounting type
- **2** —— Axial foot mounting type
- **3** —— Flange mounting type
- **11** —— Trunnion type
- **11-11T** — Trunnion type (with supporting brackets)
- ●Mounting brackets are already assembled at shipping.
- ●Orders for mounting brackets only are also accepted.

Sensor switch (For cylinder with magnet)

ZC130	2-lead wire	Solid state type	with indicator lamp	DC10～28V
ZC153	3-lead wire	Solid state type	with indicator lamp	DC4.5～28V
CS5T	2-lead wire	Reed switch type	without indicator lamp	DC5～28V AC85～115V
CS11T	2-lead wire	Reed switch type	with indicator lamp	DC10～28V
CS2F	DIN type	Reed switch type	with indicator lamp	AC85～230V
CS3F	DIN type	Reed switch type	with indicator lamp	DC10～30V
CS4F	DIN type	Reed switch type	with indicator lamp	DC10～30V
CS5F	DIN type	Reed switch type	without indicator lamp	DC3～30V

- ●For mounting location of sensor switch, see p.534.
- ●**CS□F** comes with a DIN connector. All others are grommet type.
- ●Orders for sensor switches only are also accepted.

Rod end accessory
- **Blank** — No rod end accessory
- **Y** —— With Y type knuckle (with pin)
- **I** —— With I type knuckle
- ●Rod end accessory for one side is included at shipping. If required for both sides, order separately. For order code, see p.538.
- ●For the cylinder joint and cylinder rod end, see p.1568.
- ●Orders for rod end accessories only are also accepted.
- ●For dimensions of rod end accessories, see p.537.

Lead wire length (Applicable only to **ZC,CS□T** types)
- **A** : 1000mm [39in.]
- **B** : 3000mm [118in.]

Number of sensor switches
- **1** —— With 1 sensor switch
- **2** —— With 2 sensor switches
- ⋮ ⋮
- **n** —— With n sensor switches

Inner Construction and Major Parts

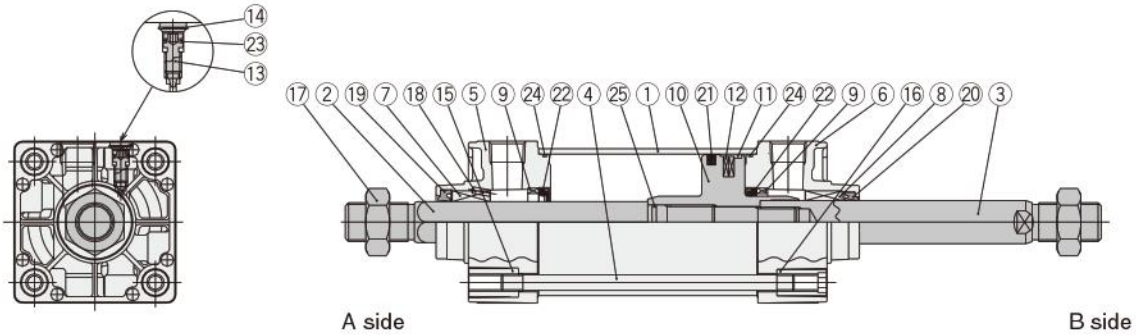

Major Parts and Materials

No.	Parts	Materials
①	Cylinder tube	Aluminum alloy, and steel tube specification is steel
②	Piston rod A	Carbon steel for machine structural use
③	Piston rod B	Carbon steel for machine structural use
④	Tie rod	Carbon steel for machine structural use
⑤	Rod cover A	Aluminum die-casting
⑥	Rod cover B	Aluminum die-casting
⑦	Rod bushing A	Aluminum alloy
⑧	Rod bushing B	Oil impregnated sintered copper alloy
⑨	Keep ring	Aluminum alloy
⑩	Piston	Aluminum alloy
⑪	Wear ring	Plastic
⑫	Magnet	Rubber magnet

No.	Parts	Materials
⑬	Cushion needle	Carbon steel for machine structural use
⑭	Snap ring	Spring steel
⑮	Tie rod nut R	Rolled steel for general structural use
⑯	Tie rod nut H	Chrome-molybdenum steel
⑰	Rod end nut	Rolled steel for general structural use
⑱	Spring pin	Carbon steel for machine structural use
⑲	Rod seal A	Urethane rubber
⑳	Rod seal B	Synthetic rubber (NBR)
㉑	Piston seal	Synthetic rubber (NBR)
㉒	Cushion seal	Synthetic rubber (NBR)
㉓	Cushion gasket	Synthetic rubber (NBR)
㉔	Tube gasket	Synthetic rubber (NBR)
㉕	Piston gasket	Synthetic rubber (NBR)

Seals

Parts	Rod seal A	Rod seal B	Piston seal	Cushion seal	Tube gasket	Piston gasket	Cushion gasket
Bore size mm \ Quantity	1★	1★	1★	2	2★	1	2
40	PGR14A	DRP16	PWP40N	CPF20	1.5×40	S10	S5
50	PGR19	DRP20	PWP50N	CPF24	1.5×50	S14	S6
63	PGR19	DRP20	PWP63N	CPF24	1.5×63	S14	S6
80	PGR23	DRP25	PWP80N	CPF30	1.5×80	S18	S6
100	PGR23	DRP30	PWP100N	CPF35	1.5×100	S18	S6

Remark: Items marked with a star (★) are available as repair kits.
Order codes: For non-rotating double rod cylinders···SRK-NDDADL [Bore size]

Mass

kg [lb.]

Bore size mm [in.]	Zero stroke mass						Additional mass for each 1mm [0.0394in.] stroke	Mass of 1 sensor switch [w. holder]		Mass of knuckle	
	Basic type	Foot mounting type	Axial foot mounting type	Flange mounting type	Trunnion type	Trunnion type (w. supporting bkt.)		ZC□□□ CS□T type	CS□F	Y type knuckle (with pin)	I type knuckle
40 [1.575]	0.84 [1.85] (0.88 [1.94])	0.97 [2.14] (1.01 [2.23])	1.04 [2.29] (1.08 [2.38])	1.21 [2.67] (1.25 [2.76])	1.32 [2.91] (1.36 [3.00])	1.82 [4.01] (1.86 [4.10])	0.00433 [0.00955] (0.00564 [0.01244])	0.04 [0.09]	0.05 [0.11]	0.27 [0.60]	0.16 [0.35]
50 [1.969]	1.35 [2.98] (1.41 [3.11])	1.52 [3.35] (1.58 [3.48])	1.67 [3.68] (1.73 [3.81])	1.74 [3.84] (1.80 [3.97])	1.90 [4.19] (1.96 [4.32])	2.40 [5.29] (2.46 [5.42])	0.00670 [0.01477] (0.00877 [0.01934])			0.34 [0.75]	0.21 [0.46]
63 [2.480]	1.86 [4.10] (1.94 [4.28])	2.09 [4.61] (2.17 [4.78])	2.38 [5.25] (2.46 [5.42])	2.39 [5.27] (2.47 [5.45])	2.56 [5.64] (2.64 [5.82])	3.06 [6.75] (3.14 [6.92])	0.00757 [0.01669] (0.01015 [0.02238])	0.04 [0.09]	0.06 [0.13]	0.34 [0.75]	0.21 [0.46]
80 [3.150]	3.16 [6.97] (3.33 [7.34])	3.54 [7.81] (3.71 [8.18])	4.01 [8.84] (4.18 [9.22])	4.76 [10.50] (4.93 [10.87])	4.32 [9.53] (4.49 [9.90])	5.04 [11.11] (5.21 [11.49])	0.01193 [0.02631] (0.01661 [0.03663])			0.87 [1.92]	0.62 [1.37]
100 [3.940]	4.22 [9.31] (4.43 [9.77])	4.69 [10.34] (4.90 [10.80])	5.50 [12.13] (5.71 [12.59])	6.44 [14.20] (6.65 [14.66])	5.75 [12.68] (5.96 [13.14])	6.47 [14.27] (6.68 [14.73])	0.01420 [0.03131] (0.02001 [0.04412])			A side 0.87 [1.92] B side 1.47 [3.24]	A side 0.62 [1.37] B side 1.24 [2.73]

Note: For lead wire length A (1000mm [39in.]).
Remarks: 1. Figures in parentheses ( ) are for steel tube specification.
2. A side=Non-rotating side

Calculation example: For foot mounting type with bore size of 50mm, and stroke of 100mm, 1.52+(0.00670×100)=2.19kg [4.83lb.]

Dimensions of Basic Type (mm)

DDADL Bore size × Stroke

CAD DDADL Bore size

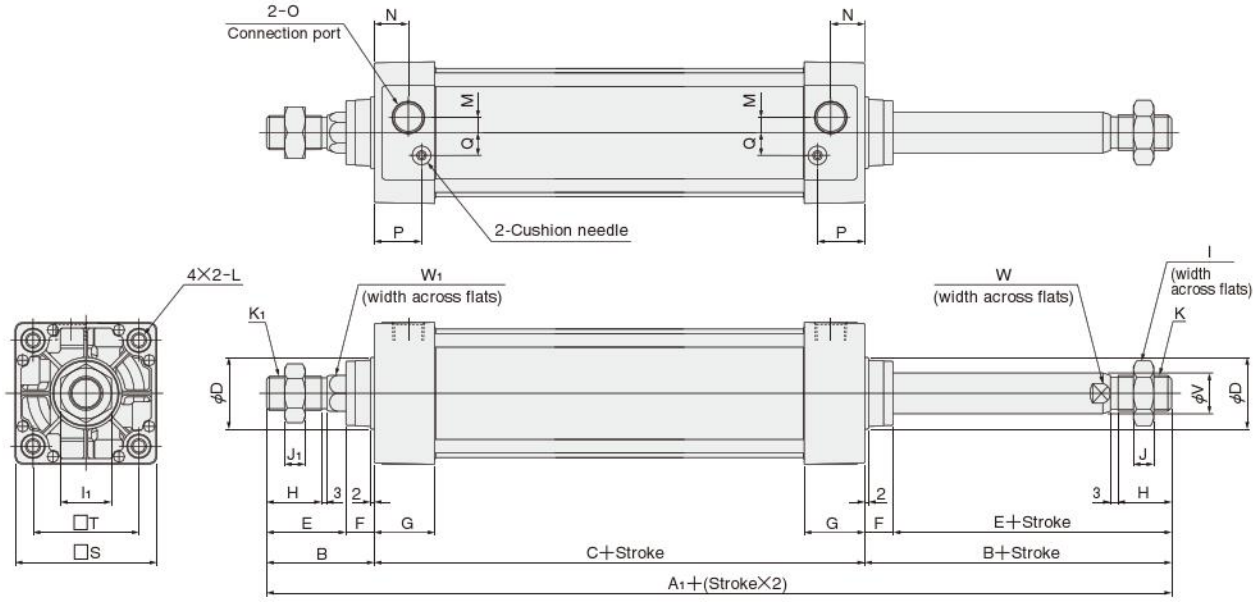

Bore mm[in] \ Code	A_1	B	C	D	E	F	G	H	I	I_1	J	J_1	K	K_1
40 [1.575]	191	49	93	32	34	15	31	21	22	19	8	7	M14×1.5	M12×1.25
50 [1.969]	207	57	93	38	42	15	31	29	27	27	11	11	M18×1.5	M18×1.5
63 [2.480]	210	57	96	38	42	15	32	29	27	27	11	11	M18×1.5	M18×1.5
80 [3.150]	258	75	108	44	54	21	36	37	32	32	13	13	M22×1.5	M22×1.5
100 [3.940]	258	75	108	50	54	21	36	37	36	32	14	13	M26×1.5	M22×1.5

Bore mm[in] \ Code	L	M	N	O	P	Q	S	T	V	W	W_1
40 [1.575]	M 6×1 Depth 14	4	18	Rc1/4	25.5	10	50	37	16	14	14
50 [1.969]	M 6×1 Depth 14	7	18	Rc3/8	24	12	62	47	20	17	19
63 [2.480]	M 8×1.25 Depth 14	8	18	Rc3/8	25	12	75	56	20	17	19
80 [3.150]	M10×1.5 Depth 15	11	20	Rc1/2	29	16	94	70	25	21	23
100 [3.940]	M10×1.5 Depth 15	12	20	Rc1/2	29	18	112	84	30	26	23

Dimensions of Foot Mounting Type (mm)

DDADL Bore size × Stroke **-1**

CAD Foot mounting bracket only DDA Bore size -1

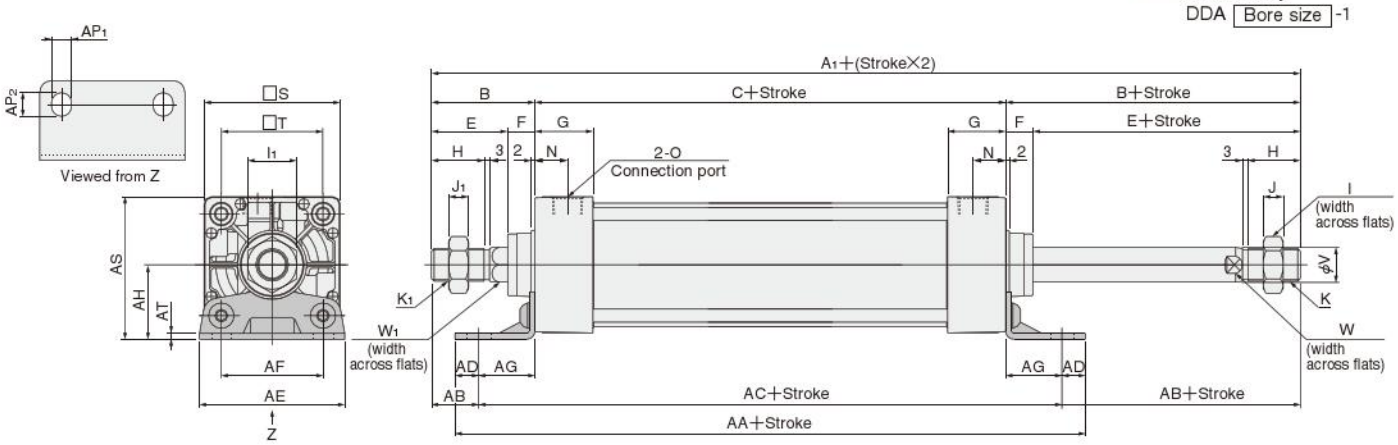

Bore mm [in.] \ Code	A1	B	C	E	F	G	H	I	I1	J	J1	K	K1	N	O	S	T	V	W	W1
40 [1.575]	191	49	93	34	15	31	21	22	19	8	7	M14X1.5	M12X1.25	18	Rc1/4	50	37	16	14	14
50 [1.969]	207	57	93	42	15	31	29	27	27	11	11	M18X1.5	M18X1.5	18	Rc3/8	62	47	20	17	19
63 [2.480]	210	57	96	42	15	32	29	27	27	11	11	M18X1.5	M18X1.5	18	Rc3/8	75	56	20	17	19
80 [3.150]	258	75	108	54	21	36	37	32	32	13	13	M22X1.5	M22X1.5	20	Rc1/2	94	70	25	21	23
100 [3.940]	258	75	108	54	21	36	37	36	32	14	13	M26X1.5	M22X1.5	20	Rc1/2	112	84	30	26	23

Bore mm [in.] \ Code	AA	AB	AC	AD	AE	AF	AG	AH	AP1	AP2	AS	AT
40 [1.575]	165	25.5	140	12.5	57	36	23.5	30	11	13	55	3.2
50 [1.969]	173	29	149	12	68	47	28	36.5	11	13	67.5	3.2
63 [2.480]	184	26	158	13	80	56	31	41	11	13	78.5	3.2
80 [3.150]	200	45	168	16	97	70	30	49	14	16	96	4
100 [3.940]	200	45	168	16	112	84	30	57	14	16	113	4

Dimensions of Axial Foot Mounting Type (mm)

DDADL Bore size × Stroke **-2**

CAD Axial foot mounting bracket only DDA Bore size -2

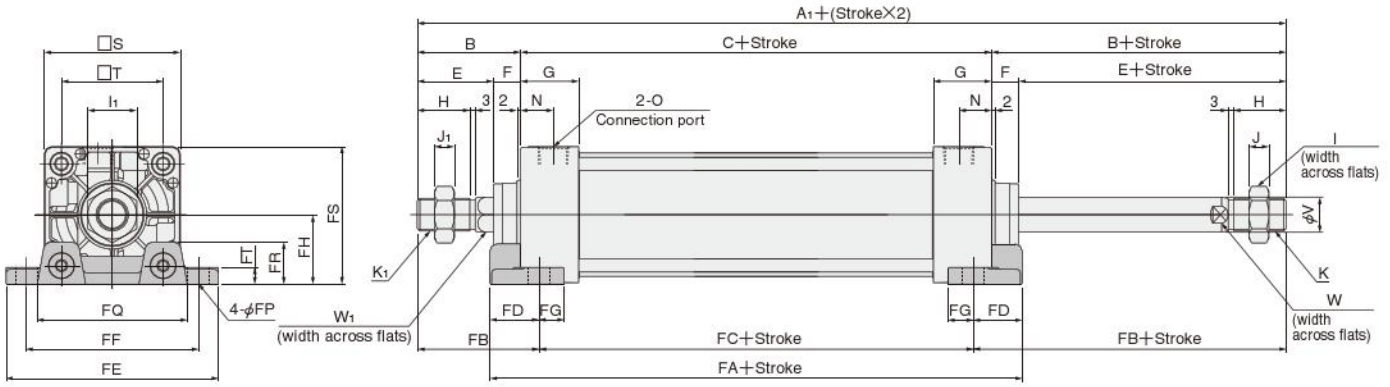

Bore mm [in.] \ Code	A1	B	C	E	F	G	H	I	I1	J	J1	K	K1	N	O	S	T	V	W	W1
40 [1.575]	191	49	93	34	15	31	21	22	19	8	7	M14X1.5	M12X1.25	18	Rc1/4	50	37	16	14	14
50 [1.969]	207	57	93	42	15	31	29	27	27	11	11	M18X1.5	M18X1.5	18	Rc3/8	62	47	20	17	19
63 [2.480]	210	57	96	42	15	32	29	27	27	11	11	M18X1.5	M18X1.5	18	Rc3/8	75	56	20	17	19
80 [3.150]	258	75	108	54	21	36	37	32	32	13	13	M22X1.5	M22X1.5	20	Rc1/2	94	70	25	21	23
100 [3.940]	258	75	108	54	21	36	37	36	32	14	13	M26X1.5	M22X1.5	20	Rc1/2	112	84	30	26	23

Bore mm [in.] \ Code	FA	FB	FC	FD	FE	FF	FG	FH	FP	FQ	FR	FS	FT
40 [1.575]	119	59	73	23	92	70	14	25	12	58	16	50	8
50 [1.969]	123	67	73	25	105	83	14	31	12	68	17	62	9
63 [2.480]	130	67	76	27	117	95	14	38	12	84	22	75.5	9
80 [3.150]	150	88	82	34	147	121	18	47	14	104	28	94	13
100 [3.940]	158	88	82	38	168	140	18	57	14	120	30	113	14

Dimensions of Flange Mounting Type (mm)

DDADL Bore size × Stroke **-3**

CAD Flange mounting bracket only
DDA Bore size -3

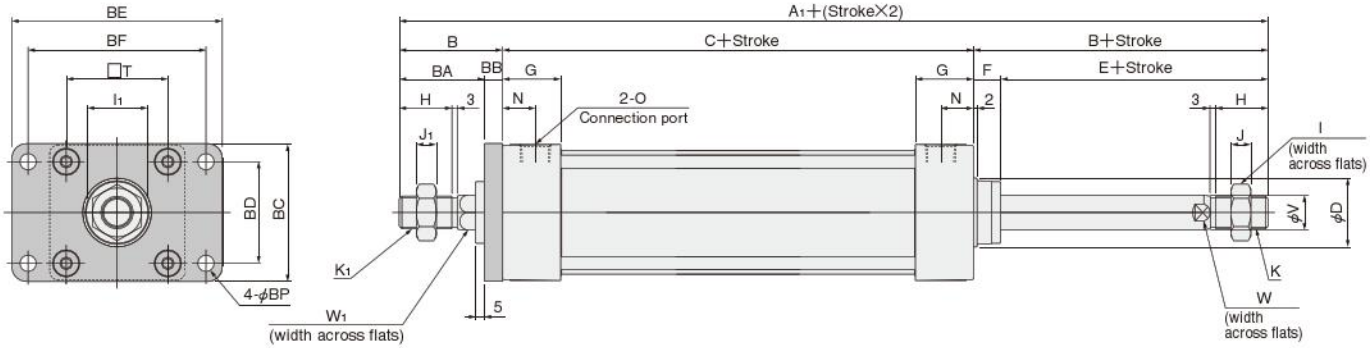

Bore mm [in.] \ Code	A1	B	C	D	E	F	G	H	I	I1	J	J1	K	K1	N	O	T	V	W	W1
40 [1.575]	191	49	93	32	34	15	31	21	22	19	8	7	M14×1.5	M12×1.25	18	Rc1/4	37	16	14	14
50 [1.969]	207	57	93	38	42	15	31	29	27	27	11	11	M18×1.5	M18×1.5	18	Rc3/8	47	20	17	19
63 [2.480]	210	57	96	38	42	15	32	29	27	27	11	11	M18×1.5	M18×1.5	18	Rc3/8	56	20	17	19
80 [3.150]	258	75	108	44	54	21	36	37	32	32	13	13	M22×1.5	M22×1.5	20	Rc1/2	70	25	21	23
100 [3.940]	258	75	108	50	54	21	36	37	36	32	14	13	M26×1.5	M22×1.5	20	Rc1/2	84	30	26	23

Bore mm [in.] \ Code	BA	BB	BC	BD	BE	BF	BP
40 [1.575]	39	10	52	36	84	70	7
50 [1.969]	47	10	65	47	104	86	9
63 [2.480]	47	10	76	56	116	98	9
80 [3.150]	59	16	95	70	143	119	12
100 [3.940]	59	16	115	84	162	138	12

Dimensions of Trunnion Type (mm)

DDADL Bore size × Stroke **-11**

CAD Trunnion bracket only
DDA Bore size -11

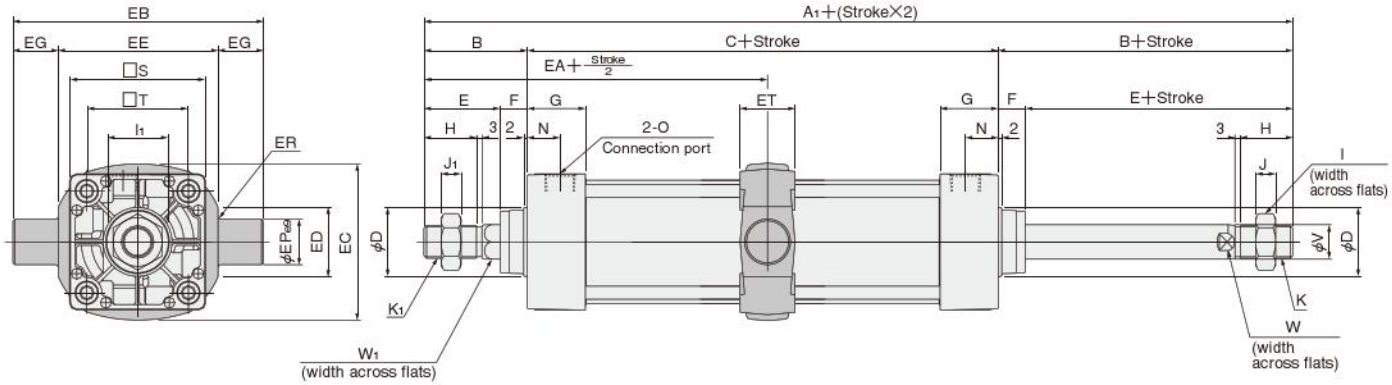

Code / Bore mm [in.]	A1	B	C	D	E	F	G	H	I	I1	J	J1	K	K1	N	O	S	T	V	W	W1
40 [1.575]	191	49	93	32	34	15	31	21	22	19	8	7	M14×1.5	M12×1.25	18	Rc1/4	50	37	16	14	14
50 [1.969]	207	57	93	38	42	15	31	29	27	27	11	11	M18×1.5	M18×1.5	18	Rc3/8	62	47	20	17	19
63 [2.480]	210	57	96	38	42	15	32	29	27	27	11	11	M18×1.5	M18×1.5	18	Rc3/8	75	56	20	17	19
80 [3.150]	258	75	108	44	54	21	36	37	32	32	13	13	M22×1.5	M22×1.5	20	Rc1/2	94	70	25	21	23
100 [3.940]	258	75	108	50	54	21	36	37	36	32	14	13	M26×1.5	M22×1.5	20	Rc1/2	112	84	30	26	23

Code / Bore mm [in.]	EA	EB	EC	ED	EE	EG	EP	ER	ET
40 [1.575]	95.5	113	60	30	63	25	25	R1.6	30
50 [1.969]	103.5	126	72	30	76	25	25	R1.6	30
63 [2.480]	105	138	87	40	88	25	25	R1.6	30
80 [3.150]	129	164	105	40	114	25	25	R1.6	35
100 [3.940]	129	182	129	44	132	25	25	R2	40

●With Supporting Brackets DDADL Bore size × Stroke -11-11T

CAD Trunnion supporting bracket only
DDA Bore size -11T

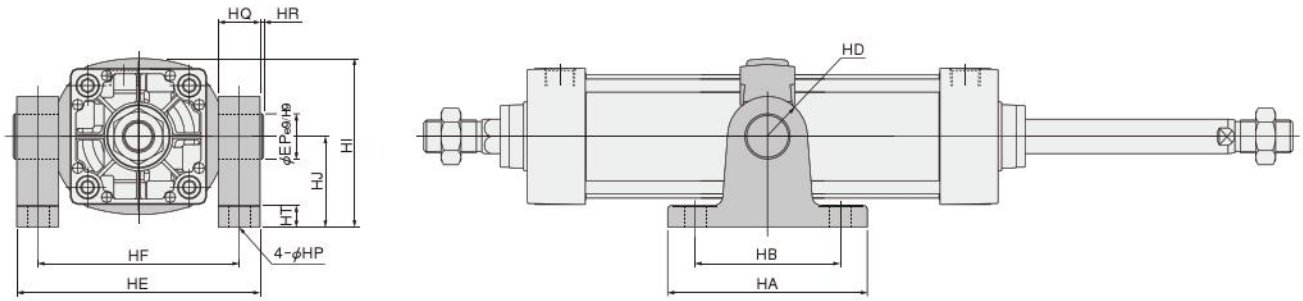

Code / Bore mm [in.]	HA	HB	HD	HE	HF	HI	HJ	HP	HQ	HR	HT	EP
40 [1.575]	111	80	R22	109	86	80	50	12(Thru hole)	23	2	14	25
50 [1.969]	111	80	R22	122	99	86	50	12(Thru hole)	23	2	14	25
63 [2.480]	111	80	R22	134	111	93.5	50	12(Thru hole)	23	2	14	25
80 [3.150]	121	85	R22	160	137	122.5	70	14(Thru hole)	23	2	14	25
100 [3.940]	121	85	R22	178	155	134.5	70	14(Thru hole)	23	2	14	25

DYNA TANDEM CYLINDERS

Symbol

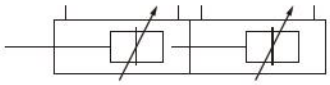

Specifications

Item / Bore size mm [in.]	40 [1.575]	50 [1.969]	63 [2.480]	80 [3.150]	100 [3.940]
Operation type	Double acting type				
Media	Air				
Mounting type	Basic type, Foot type, Axial foot type, Rod side flange type, Head side flange type, Clevis type, Pivot type, Trunnion type				
Operating pressure range MPa [psi.]	0.05～0.7 [7～102]				
Proof pressure MPa [psi.]	1.05 [152]				
Operating temperature range °C [°F]	—10～70 [14～158] (Freezing prohibited, With sensor is 0～60 [32～140].)				
Operating speed range mm/s [in./sec.]	30～700 [1.2～27.6]				
Cushion	Variable cushion at both ends of stroke (applied to each cylinder)				
Cushion stroke mm [in.]	16 [0.630]	20 [0.787]		25 [0.984]	
Lubrication	Not required (If lubrication is required, use Turbine Oil Class 1 (ISO VG32) or equivalent.)				
Port size Rc	1/4	3/8		1/2	

Bore Size and Stroke

mm

	Bore size	Stroke1									Maximum available stroke (Stroke 1＋Stroke 2)
		50	75	100	150	200	250	300	350	400	
Stroke 2	40	0, 25, 50, 100 150, 200, 250 300, 350, 400	0, 25, 75, 125 175, 225, 275 325	0, 50, 100, 150 200, 250, 300	0, 50, 100, 150 200	0, 50, 100	0	—	—	—	800
	50, 63	0, 25, 50, 100 150, 200, 250 300, 350, 400 450	0, 25, 75, 125 175, 225, 275 325, 375, 425	0, 50, 100, 150 200, 250, 300 350, 400	0, 50, 100, 150 200, 250, 300	0, 50, 100, 150 200	0, 50, 100	0	—	—	1000
	80, 100	0, 25, 50, 100 150, 200, 250 300, 350, 400 450, 550, 650	0, 25, 75, 125 175, 225, 275 325, 375, 425 525, 625	0, 50, 100, 150 200, 250, 300 350, 400, 500 600	0, 50, 100, 150 200, 250, 300 350, 450	0, 50, 100, 150 200, 250, 300 400	0, 50, 100 150, 200 250	0, 50, 100 150, 200	0, 50 100	0	1000

Caution: Figures in the table are a combination of stroke 2 (standard) corresponding to stroke 1 (standard).

Remarks: 1. Stroke tolerance; Strokes of 250 or less: $^{+1}_{0}$ [$^{+0.039in.}_{0}$]
Strokes of 251～1000: $^{+1.5}_{0}$ [$^{+0.059in.}_{0}$]
2. For non-standard strokes, consult us.
3. For the maximum available stroke with bellows specification, see p.538.

●About stroke 1 and stroke 2

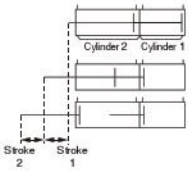

Stroke 1 is the stroke of cylinder 1.
Stroke 2 is obtained by subtracting stroke 1 from the stroke of cylinder 2.

Order Codes

DDA □ **63×100×50** – □ – □ – □ – □ □ □

Bore size × Stroke1 × Stroke2

Types of bellows
- **JT** —— Nylon tarpaulin (～80°C [176°F])
- **JC** —— Chloroprene (～100°C [212°F])
- **JK** —— Conex (～200°C [392°F])
- **JA** —— Alumix (～250°C [482°F])

●Conex is a registered trademark of Teijin, Inc.
●The temperatures shown are the bellows' own durable temperatures, and are not temperatures for cylinder use.

Cylinder specification
- **T** —— Tandem cylinder
- **JT** —— Tandem cylinder with bellows

DYNA Cylinder Basic model

Mounting type
- **Blank** — Basic type
- **1** —— Foot mounting type
- **2** —— Axial foot mounting type
- **3** —— Rod side flange mounting type
- **5** —— Head side flange mounting type
- **7** —— Clevis mounting type (with pin)
- **7-7C** — Clevis mounting type (with supporting bracket)
- **8** —— Pivot mounting type
- **11** —— Trunnion type
- **11-11T**— Trunnion type (with supporting brackets)

●Mounting brackets are already assembled at shipping.
●Orders for mounting brackets only are also accepted.

Sensor switch (For cylinder with magnet)

ZC130 —	2-lead wire	Solid state type	with indicator lamp	DC10～28V
ZC153 —	3-lead wire	Solid state type	with indicator lamp	DC4.5～28V
CS5T —	2-lead wire	Reed switch type	without indicator lamp	DC5～28V AC85～115V
CS11T —	2-lead wire	Reed switch type	with indicator lamp	DC10～28V
CS2F —	DIN type	Reed switch type	with indicator lamp	AC85～230V
CS3F —	DIN type	Reed switch type	with indicator lamp	DC10～30V
CS4F —	DIN type	Reed switch type	with indicator lamp	DC10～30V
CS5F —	DIN type	Reed switch type	without indicator lamp	DC3～30V

●For mounting location of sensor switch, see p.534.
●CS□F comes with a DIN connector. All others are grommet type.
●Orders for sensor switches only are also accepted.

Rod end accessory
- **Blank** — No rod end accessory
- **Y** —— With Y type knuckle (with pin)
- **I** —— With I type knuckle

●For the cylinder joint and cylinder rod end, see p.1568.
●Orders for rod end accessories only are also accepted.
●For dimensions of rod end accessories, see p.537.

Number of sensor switches
- **1** —— With 1 sensor switch
- **2** —— With 2 sensor switches
- ⋮ ⋮
- **n** —— With n sensor switches

Lead wire length
(Applicable only to **ZC,CS□T** types)
- **A** : 1000mm [39in.]
- **B** : 3000mm [118in.]

Inner Construction and Major Parts

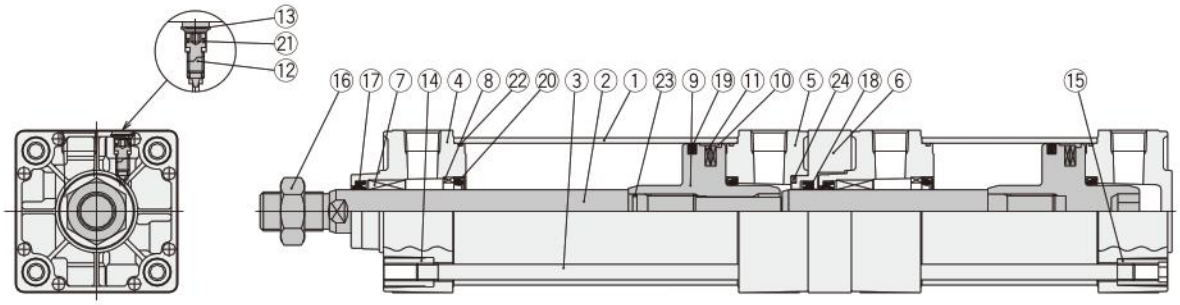

●Operation principle of tandem cylinders

Tandem Cylinders are a set of 2 cylinders joined end to end.
It can be used as a 2-stage stroke cylinder by supplying air to either Port A or Port B. It can also obtain twice the thrust within the stroke 1 range.

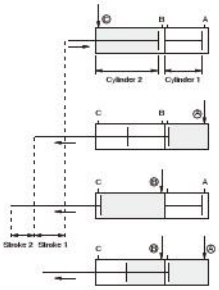

The rods retract strokes 2 and 1 when air is supplied from Port Ⓒ.

The rod moves stroke 1 when air is supplied from Port Ⓐ.

The rod moves stroke 2 when air is supplied from Port Ⓑ.

Twice the thrust is obtained within the stroke 1 range when air is supplied from Ports Ⓐ and Ⓑ.

Major Parts and Materials

No.	Parts	Materials
①	Cylinder tube	Aluminum alloy
②	Piston rod	Carbon steel for machine structural use
③	Tie rod	Carbon steel for machine structural use
④	Rod cover	Aluminum die-casting
⑤	Head cover	Aluminum die-casting
⑥	Spacer	Aluminum alloy
⑦	Rod bushing	Oil impregnated sintered copper alloy
⑧	Keep ring	Aluminum alloy
⑨	Piston	Aluminum alloy
⑩	Wear ring	Plastic
⑪	Magnet	Rubber magnet
⑫	Cushion needle	Carbon steel for machine structural use
⑬	Snap ring	Spring steel
⑭	Tie rod nut R	Rolled steel for general structural use
⑮	Tie rod nut H	Chrome-molybdenum steel
⑯	Rod end nut	Rolled steel for general structural use

No.	Parts	Materials
⑰	Rod seal A	Synthetic rubber (NBR)
⑱	Rod seal B	Synthetic rubber (NBR)
⑲	Piston seal	Synthetic rubber (NBR)
⑳	Cushion seal	Synthetic rubber (NBR)
㉑	Cushion gasket	Synthetic rubber (NBR)
㉒	Tube gasket	Synthetic rubber (NBR)
㉓	Piston gasket	Synthetic rubber (NBR)
㉔	Spacer gasket	Synthetic rubber (NBR)
—	Foot mounting bracket	Rolled steel for general structural use
—	Axial foot mounting bracket	Cast iron
—	Flange mounting bracket	Rolled steel for general structural use
—	Clevis mounting bracket	Cast iron
—	Clevis supporting bracket	Cast iron
—	Pivot mounting bracket	Cast iron
—	Trunnion bracket	Cast iron
—	Trunnion supporting bracket	Cast iron
—	Knuckles	Cast iron

Seals

Parts / Bore size mm \ Quantity	Rod seal A	Rod seal B	Piston seal	Cushion seal	Tube gasket	Cushion gasket	Piston gasket	Spacer gasket
	2★	1★	2	4	4★	4	1	1
40	DRP16	PNU16	PWP40N	CPF20	1.5×40	S5	S10	S25
50	DRP20	PNU20	PWP50N	CPF24	1.5×50	S6	S14	G30
63	DRP20	PNU20	PWP63N	CPF24	1.5×63	S6	S14	G30
80	DRP25	PNU25	PWP80N	CPF30	1.5×80	S6	S18	G35
100	DRP30	PNU30	PWP100N	CPF35	1.5×100	S6	S18	G40

Remark: Items marked with a star (★) are available as repair kits.
Order codes: For tandem cylinders···SRK-NDDAT Bore size

Mass

kg [lb.]

Bore size mm [in.]	Zero stroke mass									Additional mass for each 1mm [0.0394in.] stroke		Mass of 1 sensor switch [w. holder]		Mass of knuckle	
	Basic type	Foot type	Axial foot type	Flange type	Clevis type (with pin)	Clevis type (w. supporting bkt.)	Pivot type	Trunnion type	Trunnion type (w. supporting bkt.)	Stroke1	Stroke2	ZC□□□ CS□T Note	CS□F	Y type knuckle (with pin)	I type knuckle
40 [1.575]	1.40 [3.09]	1.53 [3.37]	1.60 [3.53]	1.77 [3.90]	1.67 [3.68]	2.37 [5.23]	1.58 [3.48]	1.88 [4.15]	2.38 [5.25]	0.00300 [0.00662]	0.00300 [0.00662]	0.04 [0.09]	0.05 [0.11]	0.27 [0.60]	0.16 [0.35]
50 [1.969]	2.20 [4.85]	2.37 [5.23]	2.52 [5.56]	2.59 [5.71]	2.59 [5.71]	3.29 [7.25]	2.46 [5.42]	2.75 [6.06]	3.25 [7.17]	0.00428 [0.00944]	0.00428 [0.00944]			0.34 [0.75]	0.21 [0.46]
63 [2.480]	2.97 [6.55]	3.20 [7.06]	3.49 [7.70]	3.50 [7.72]	3.45 [7.61]	4.15 [9.15]	3.39 [7.47]	3.67 [8.09]	4.17 [9.19]	0.00515 [0.01136]	0.00515 [0.01136]	0.04 [0.09]	0.06 [0.13]	0.34 [0.75]	0.21 [0.46]
80 [3.150]	5.15 [11.36]	5.53 [12.19]	6.00 [13.23]	6.75 [14.88]	6.07 [13.38]	6.79 [14.97]	6.23 [13.74]	6.31 [13.91]	7.03 [15.50]	0.00834 [0.01839]	0.00834 [0.01839]			0.87 [1.92]	0.62 [1.37]
100 [3.940]	6.61 [14.58]	7.08 [15.61]	7.89 [17.40]	8.83 [19.47]	7.85 [17.31]	8.57 [18.90]	8.00 [17.64]	8.14 [17.95]	8.86 [19.54]	0.01061 [0.02340]	0.01061 [0.02340]			1.47 [3.24]	1.24 [2.73]

Note: For lead wire length A (1000mm [39in.]).

Calculation example: For foot mounting type with bore size of 50mm, stroke1 of 100mm and stroke 2 of 50mm, 2.37+(0.00428×100)+(0.00428×50)=3.012kg [6.641lb.]

Dimensions of Basic Type (mm)

DDAT Bore size × Stroke1 × Stroke2

CAD DDAT Bore size

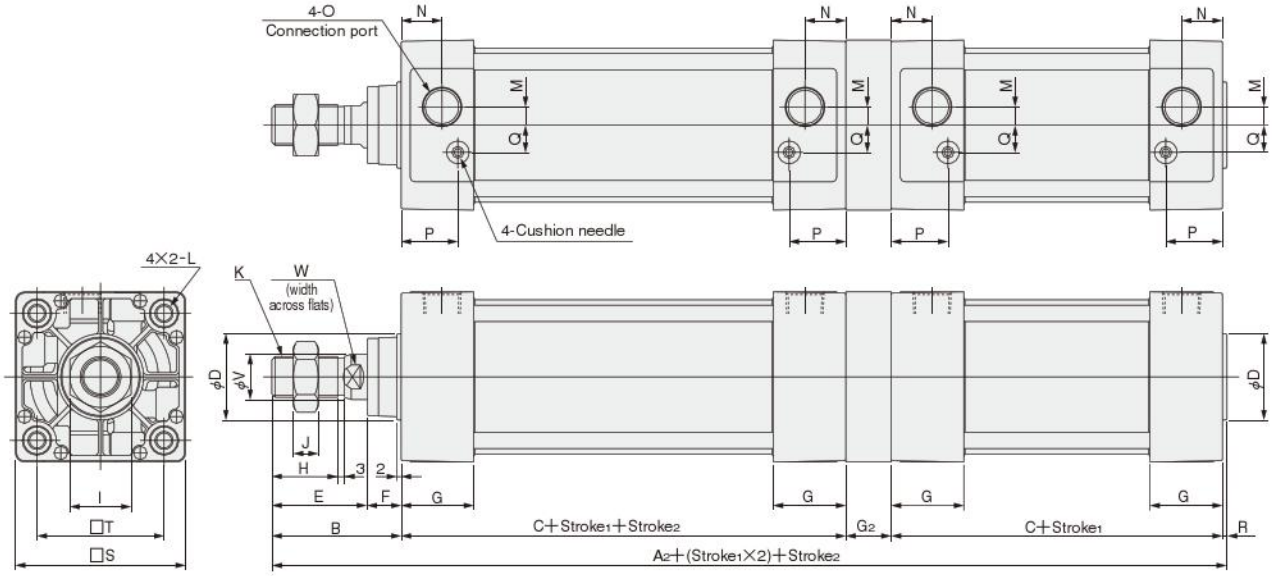

Bore mm [in.] / Code	A_2	B	C	D	E	F	G	G_2	H	I	J	K
40 [1.575]	257	49	93	32	34	15	31	20	21	22	8	M14×1.5
50 [1.969]	265	57	93	38	42	15	31	20	29	27	11	M18×1.5
63 [2.480]	271	57	96	38	42	15	32	20	29	27	11	M18×1.5
80 [3.150]	318	75	108	44	54	21	36	25	37	32	13	M22×1.5
100 [3.940]	318	75	108	50	54	21	36	25	37	36	14	M26×1.5

Bore mm [in.] / Code	L		M	N	O	P	Q	R	S	T	V	W
40 [1.575]	M 6×1	Depth 14	4	18	Rc1/4	25.5	10	2	50	37	16	14
50 [1.969]	M 6×1	Depth 14	7	18	Rc3/8	24	12	2	62	47	20	17
63 [2.480]	M 8×1.25	Depth 14	8	18	Rc3/8	25	12	2	75	56	20	17
80 [3.150]	M10×1.5	Depth 15	11	20	Rc1/2	29	16	2	94	70	25	21
100 [3.940]	M10×1.5	Depth 15	12	20	Rc1/2	29	18	2	112	84	30	26

Dimensions of Foot Mounting Type (mm)

DDAT Bore size × Stroke1 × Stroke2 **-1**

CAD Foot mounting bracket only
DDA Bore size -1

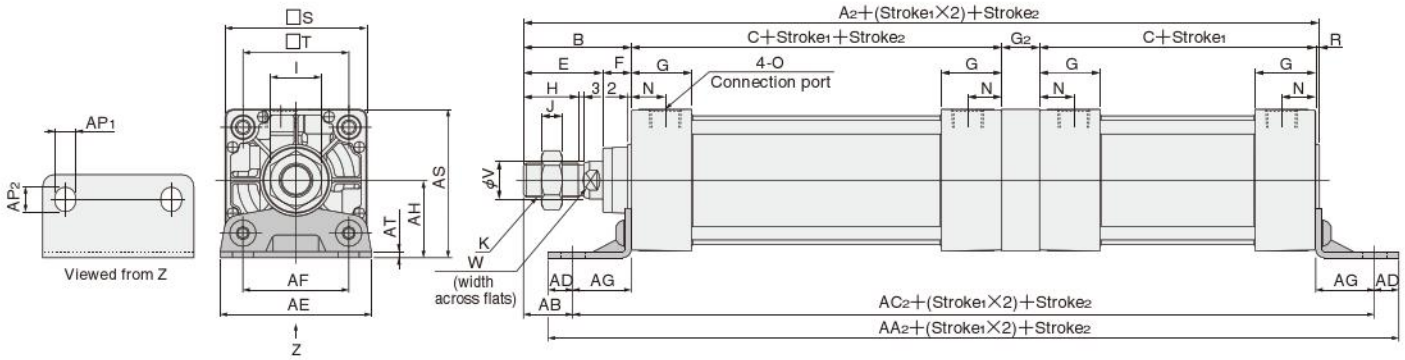

Bore mm [in.] \ Code	A_2	B	C	E	F	G	G_2	H	I	J	K	N	O	R	S	T	V	W
40 [1.575]	257	49	93	34	15	31	20	21	22	8	M14×1.5	18	Rc1/4	2	50	37	16	14
50 [1.969]	265	57	93	42	15	31	20	29	27	11	M18×1.5	18	Rc3/8	2	62	47	20	17
63 [2.480]	271	57	96	42	15	32	20	29	27	11	M18×1.5	18	Rc3/8	2	75	56	20	17
80 [3.150]	318	75	108	54	21	36	25	37	32	13	M22×1.5	20	Rc1/2	2	94	70	25	21
100 [3.940]	318	75	108	54	21	36	25	37	36	14	M26×1.5	20	Rc1/2	2	112	84	30	26

Bore mm [in.] \ Code	AA_2	AB	AC_2	AD	AE	AF	AG	AH	AP_1	AP_2	AS	AT
40 [1.575]	278	25.5	253	12.5	57	36	23.5	30	11	13	55	3.2
50 [1.969]	286	29	262	12	68	47	28	36.5	11	13	67.5	3.2
63 [2.480]	300	26	274	13	80	56	31	41	11	13	78.5	3.2
80 [3.150]	333	45	301	16	97	70	30	49	14	16	96	4
100 [3.940]	333	45	301	16	112	84	30	57	14	16	113	4

Dimensions of Axial Foot Mounting Type (mm)

DDAT Bore size × Stroke1 × Stroke2 **-2**

CAD Axial foot mounting bracket only
DDA Bore size -2

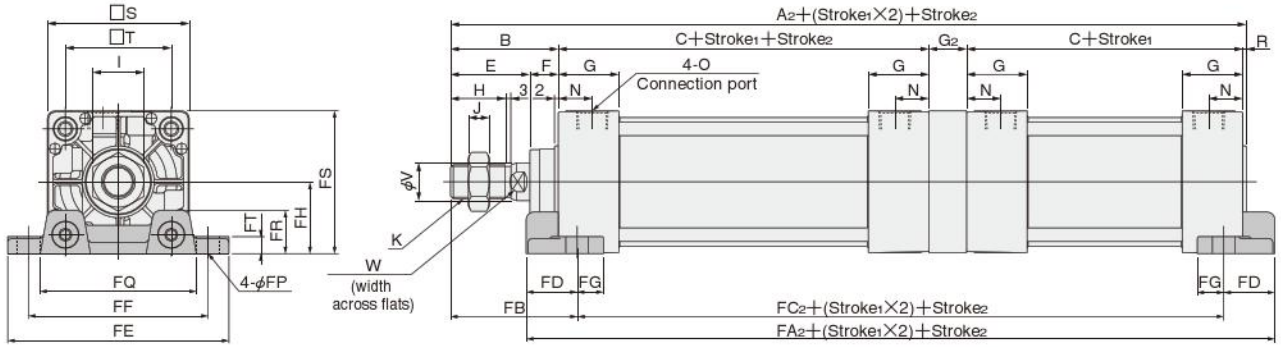

Bore mm [in.] \ Code	A_2	B	C	E	F	G	G_2	H	I	J	K	N	O	R	S	T	V	W
40 [1.575]	257	49	93	34	15	31	20	21	22	8	M14×1.5	18	Rc1/4	2	50	37	16	14
50 [1.969]	265	57	93	42	15	31	20	29	27	11	M18×1.5	18	Rc3/8	2	62	47	20	17
63 [2.480]	271	57	96	42	15	32	20	29	27	11	M18×1.5	18	Rc3/8	2	75	56	20	17
80 [3.150]	318	75	108	54	21	36	25	37	32	13	M22×1.5	20	Rc1/2	2	94	70	25	21
100 [3.940]	318	75	108	54	21	36	25	37	36	14	M26×1.5	20	Rc1/2	2	112	84	30	26

Bore mm [in.] \ Code	FA_2	FB	FC_2	FD	FE	FF	FG	FH	FP	FQ	FR	FS	FT
40 [1.575]	232	59	186	23	92	70	14	25	12	58	16	50	8
50 [1.969]	236	67	186	25	105	83	14	31	12	68	17	62	9
63 [2.480]	246	67	192	27	117	95	14	38	12	84	22	75.5	9
80 [3.150]	283	88	215	34	147	121	18	47	14	104	28	94	13
100 [3.940]	291	88	215	38	168	140	18	57	14	120	30	113	14

Dimensions of Rod Side Flange Mounting Type (mm)

DDAT Bore size × Stroke1 × Stroke2 **-3**

CAD Flange mounting bracket only DDA Bore size -3

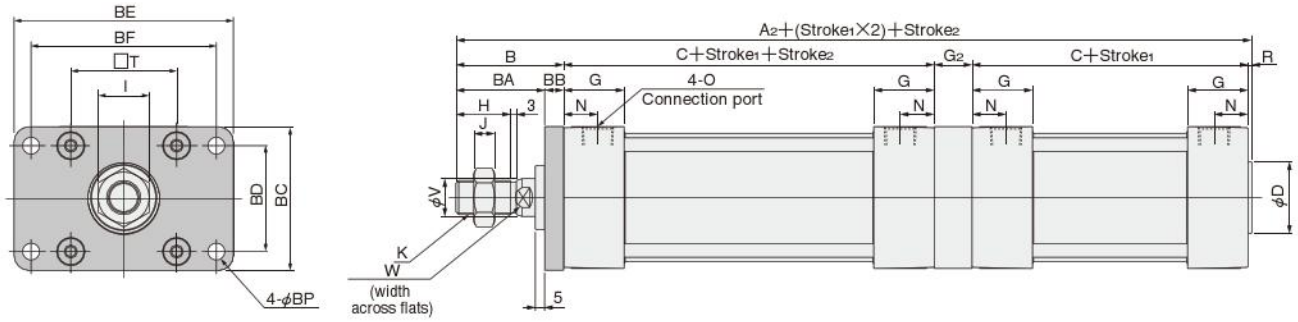

Bore mm[in.] \ Code	A2	B	C	D	G1	G2	H	I	J	K	N	O	R	T	V	W
40 [1.575]	257	49	93	32	31	20	21	22	8	M14×1.5	18	Rc1/4	2	37	16	14
50 [1.969]	265	57	93	38	31	20	29	27	11	M18×1.5	18	Rc3/8	2	47	20	17
63 [2.480]	271	57	96	38	32	20	29	27	11	M18×1.5	18	Rc3/8	2	56	20	17
80 [3.150]	318	75	108	44	36	25	37	32	13	M22×1.5	20	Rc1/2	2	70	25	21
100 [3.940]	318	75	108	50	36	25	37	36	14	M26×1.5	20	Rc1/2	2	84	30	26

Bore mm[in.] \ Code	BA	BB	BC	BD	BE	BF	BP
40 [1.575]	39	10	52	36	84	70	7
50 [1.969]	47	10	65	47	104	86	9
63 [2.480]	47	10	76	56	116	98	9
80 [3.150]	59	16	95	70	143	119	12
100 [3.940]	59	16	115	84	162	138	12

Dimensions of Head Side Flange Mounting Type (mm)

DDAT Bore size × Stroke1 × Stroke2 **-5**

CAD Flange mounting bracket only DDA Bore size -3

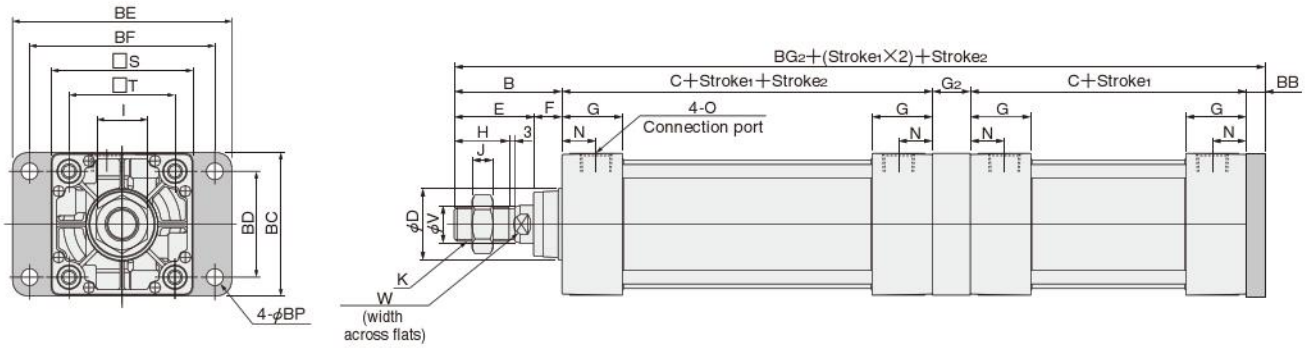

Bore mm[in.] \ Code	B	C	D	E	F	G1	G2	H	I	J	K	N	O	S	T	V	W
40 [1.575]	49	93	32	34	15	31	20	21	22	8	M14×1.5	18	Rc1/4	50	37	16	14
50 [1.969]	57	93	38	42	15	31	20	29	27	11	M18×1.5	18	Rc3/8	62	47	20	17
63 [2.480]	57	96	38	42	15	32	20	29	27	11	M18×1.5	18	Rc3/8	75	56	20	17
80 [3.150]	75	108	44	54	21	36	25	37	32	13	M22×1.5	20	Rc1/2	94	70	25	21
100 [3.940]	75	108	50	54	21	36	25	37	36	14	M26×1.5	20	Rc1/2	112	84	30	26

Bore mm[in.] \ Code	BB	BC	BD	BE	BF	BG2	BP
40 [1.575]	10	52	36	84	70	265	7
50 [1.969]	10	65	47	104	86	273	9
63 [2.480]	10	76	56	116	98	279	9
80 [3.150]	16	95	70	143	119	332	12
100 [3.940]	16	115	84	162	138	332	12

Dimensions of Clevis Mounting Type (mm)

DDAT Bore size × Stroke1 × Stroke2 **-7**

CAD Clevis mounting bracket only
DDA Bore size -7

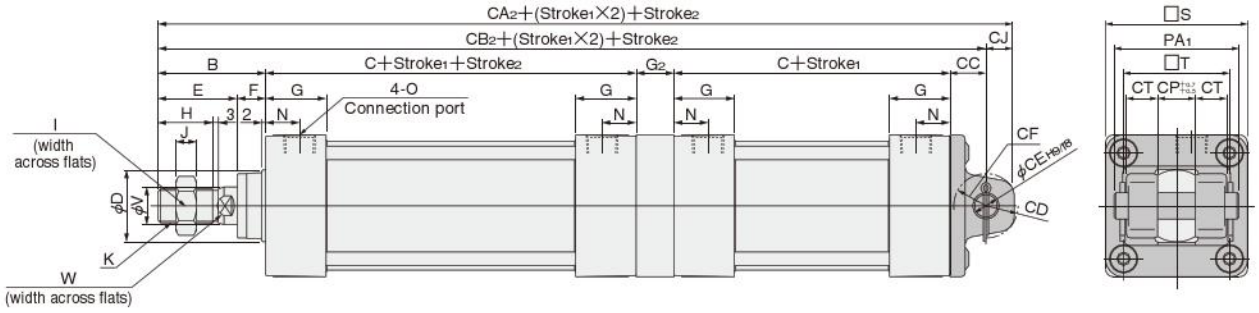

Bore mm [in.] \ Code	B	C	D	E	F	G	G2	H	I	J	K	N	O	S	T	V	W
40 [1.575]	49	93	32	34	15	31	20	21	22	8	M14×1.5	18	Rc1/4	50	37	16	14
50 [1.969]	57	93	38	42	15	31	20	29	27	11	M18×1.5	18	Rc3/8	62	47	20	17
63 [2.480]	57	96	38	42	15	32	20	29	27	11	M18×1.5	18	Rc3/8	75	56	20	17
80 [3.150]	75	108	44	54	21	36	25	37	32	13	M22×1.5	20	Rc1/2	94	70	25	21
100 [3.940]	75	108	50	54	21	36	25	37	36	14	M26×1.5	20	Rc1/2	112	84	30	26

Bore mm [in.] \ Code	CA2	CB2	CC	CD	CE	CF	CJ	CP	CT	PA1
40 [1.575]	287	274	19	R15	14	R17	13	20	12.5	58
50 [1.969]	297	282	19	R17	14	R17	15	20	16.5	66
63 [2.480]	303	288	19	R17	14	R17	15	20	16.5	66
80 [3.150]	369	348	32	R24	20	R30	21	32	17.5	78
100 [3.940]	369	348	32	R24	20	R30	21	32	17.5	78

●With Supporting Bracket DDAT Bore size × Stroke1 × Stroke2 -7-7C

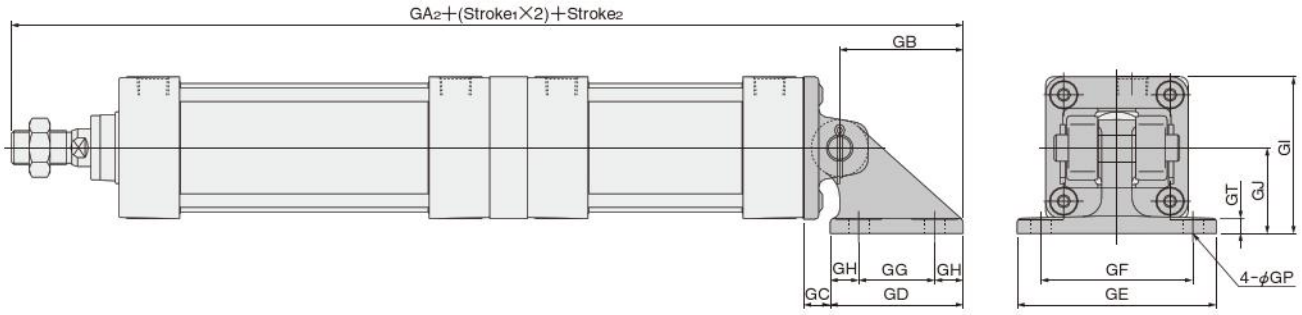

Bore mm [in.] \ Code	GA2	GB	GC	GD	GE	GF	GG	GH	GI	GJ	GP	GT
40 [1.575]	340.5	66.5	12.5	73	105	80	40	16.5	70	45	11(Thru hole)	8
50 [1.969]	348.5	66.5	12.5	73	105	80	40	16.5	76	45	11(Thru hole)	8
63 [2.480]	354.5	66.5	12.5	73	105	80	40	16.5	82.5	45	11(Thru hole)	8
80 [3.150]	434.5	86.5	20.5	98	135	105	65	16.5	107	60	14(Thru hole)	12
100 [3.940]	434.5	86.5	20.5	98	135	105	65	16.5	116	60	14(Thru hole)	12

Dimensions of Pivot Mounting Type (mm)

DDAT Bore size × Stroke1 × Stroke2 **-8**

CAD Pivot mounting bracket only
DDA Bore size -8

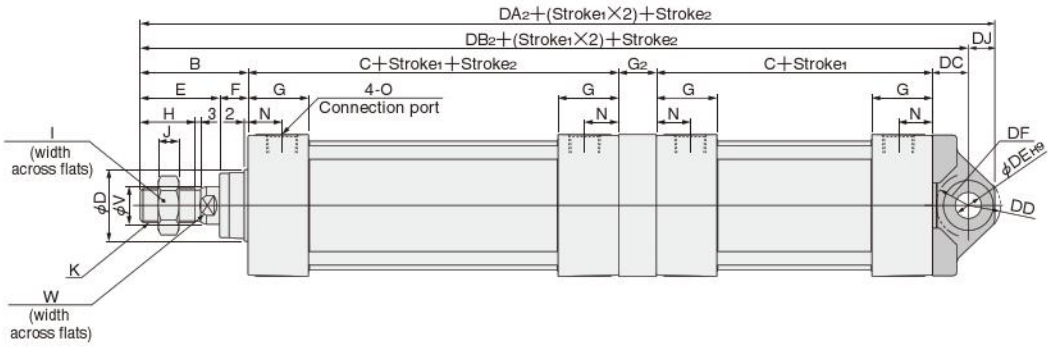

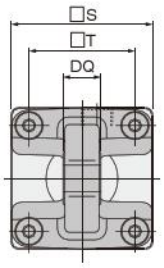

Code / Bore mm[in.]	B	C	D	E	F	G	G2	H	I	J	K	N	O	S	T	V	W
40 [1.575]	49	93	32	34	15	31	20	21	22	8	M14×1.5	18	Rc1/4	50	37	16	14
50 [1.969]	57	93	38	42	15	31	20	29	27	11	M18×1.5	18	Rc3/8	62	47	20	17
63 [2.480]	57	96	38	42	15	32	20	29	27	11	M18×1.5	18	Rc3/8	75	56	20	17
80 [3.150]	75	108	44	54	21	36	25	37	32	13	M22×1.5	20	Rc1/2	94	70	25	21
100 [3.940]	75	108	50	54	21	36	25	37	36	14	M26×1.5	20	Rc1/2	112	84	30	26

Code / Bore mm[in.]	DA2	DB2	DC	DD	DE	DF	DJ	DQ
40 [1.575]	288	274	19	R17	14	R17	14	$20^{0}_{-0.084}$
50 [1.969]	296	282	19	R17	14	R17	14	$20^{0}_{-0.084}$
63 [2.480]	302	288	19	R17	14	R17	14	$20^{0}_{-0.084}$
80 [3.150]	369	348	32	R24	20	R25	21	$32^{0}_{-0.100}$
100 [3.940]	368	348	32	R24	20	R26	20	$32^{0}_{-0.100}$

Dimensions of Trunnion Type (mm)

DDAT Bore size × Stroke1 × Stroke2 **-11**

CAD Trunnion bracket only DDA Bore size -11

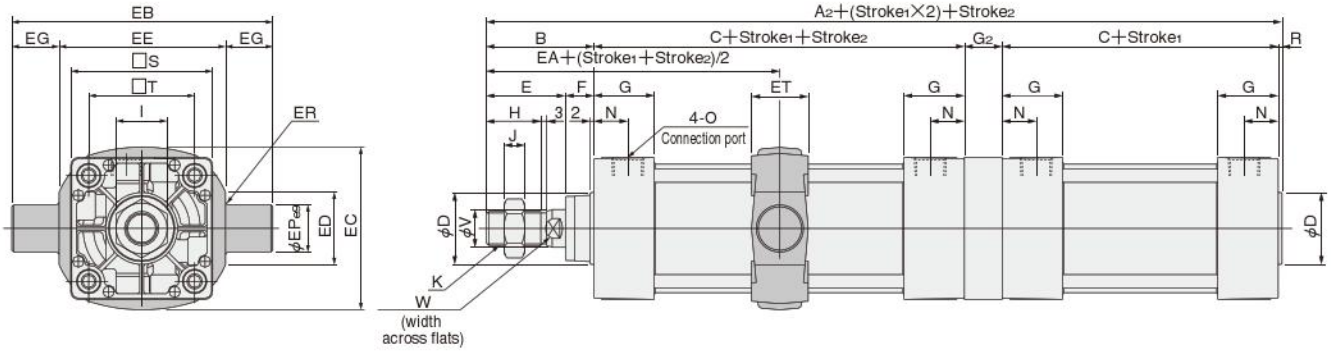

Bore mm [in.] \ Code	A2	B	C	D	E	F	G	G2	H	I	J	K	N	O	R	S	T	V	W
40 [1.575]	257	49	93	32	34	15	31	20	21	22	8	M14×1.5	18	Rc1/4	2	50	37	16	14
50 [1.969]	265	57	93	38	42	15	31	20	29	27	11	M18×1.5	18	Rc3/8	2	62	47	20	17
63 [2.480]	271	57	96	38	42	15	32	20	29	27	11	M18×1.5	18	Rc3/8	2	75	56	20	17
80 [3.150]	318	75	108	44	54	21	36	25	37	32	13	M22×1.5	20	Rc1/2	2	94	70	25	21
100 [3.940]	318	75	108	50	54	21	36	25	37	36	14	M26×1.5	20	Rc1/2	2	112	84	30	26

Bore mm [in.] \ Code	EA	EB	EC	ED	EE	EG	EP	ER	ET
40 [1.575]	95.5	113	60	30	63	25	25	R1.6	30
50 [1.969]	103.5	126	72	30	76	25	25	R1.6	30
63 [2.480]	105	138	87	40	88	25	25	R1.6	30
80 [3.150]	129	164	105	40	114	25	25	R1.6	35
100 [3.940]	129	182	129	44	132	25	25	R2	40

●With Supporting Brackets DDAT Bore size × Stroke1 × Stroke2 -11-11T

CAD Trunnion supporting bracket only DDA Bore size -11T

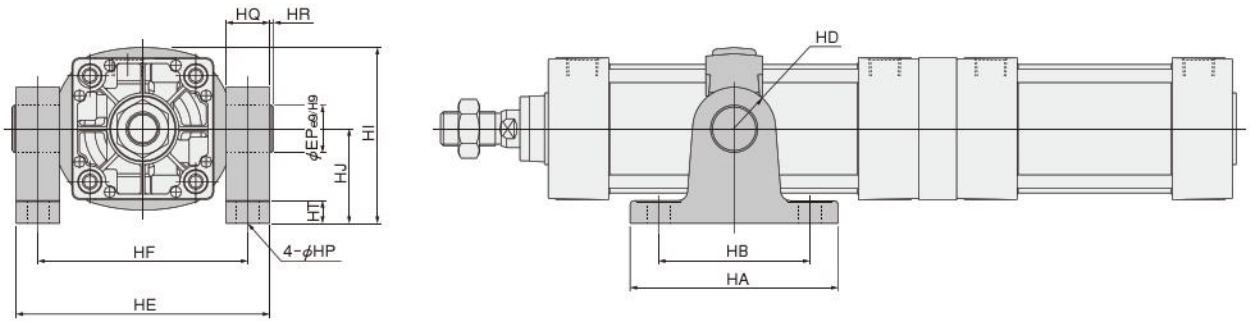

Bore mm [in.] \ Code	HA	HB	HD	HE	HF	HI	HJ	HP	HQ	HR	HT	EP
40 [1.575]	111	80	R22	109	86	80	50	12(Thru hole)	23	2	14	25
50 [1.969]	111	80	R22	122	99	86	50	12(Thru hole)	23	2	14	25
63 [2.480]	111	80	R22	134	111	93.5	50	12(Thru hole)	23	2	14	25
80 [3.150]	121	85	R22	160	137	122.5	70	14(Thru hole)	23	2	14	25
100 [3.940]	121	85	R22	178	155	134.5	70	14(Thru hole)	23	2	14	25

DYNA DUAL STROKE CYLINDERS

Symbol

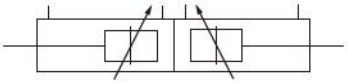

Specifications

Item / Bore size mm [in.]	40 [1.575]	50 [1.969]	63 [2.480]	80 [3.150]	100 [3.940]
Operation type	Double acting type				
Media	Air				
Mounting type	Basic type, Foot type, Axial foot type, Flange type, Trunnion type				
Operating pressure range MPa [psi.]	0.05～0.7 [7～102]				
Proof pressure MPa [psi.]	1.05 [152]				
Operating temperature range °C [°F]	—10～70 [14～158] (Freezing prohibited, With sensor is 0～60 [32～140].)				
Operating speed range mm/s [in./sec.]	30～700 [1.2～27.6]				
Cushion	Variable cushion at both ends of stroke (applied to each cylinder)				
Cushion stroke mm [in.]	16 [0.630]	20 [0.787]		25 [0.984]	
Lubrication	Not required (If lubrication is required, use Turbine Oil Class 1 (ISO VG32) or equivalent.)				
Port size Rc	1/4	3/8		1/2	

Bore Size and Stroke

mm

Bore size	Standard strokes	Maximum available stroke (Stroke1+Stroke2)
40	50, 75, 100, 150, 200, 250, 300, 350, 400, 450	800
50	50, 75, 100, 150, 200, 250, 300, 350, 400, 450, 500	1000
63		
80	50, 75, 100, 150, 200, 250, 300, 350, 400, 450, 500	1000
100	600, 700	

●**Aboout stroke 1 and stroke 2**
Stroke 1 is the stroke of cylinder 1.
Stroke 2 is the stroke of cylinder 2.

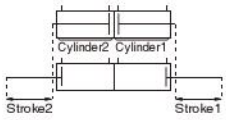

Remarks: 1. Stroke tolerance; Strokes of 250 or less: $^{+1}_{0}$ [$^{+0.039in.}_{0}$]
Strokes of 251～1000: $^{+1.5}_{0}$ [$^{+0.059in.}_{0}$]
2. The table to the left applies to both stroke 1 and stroke 2.
However, do not let (stroke 1 + stroke 2) exceed the maximum stroke.
3. For non-standard strokes, consult us.
4. For the maximum available stroke with bellows specification, see p.538.

Order Codes

DDA [ ] **63×100×50** – [ ] – [ ] – [ ] – [ ] [ ] [ ]

Bore size × Stroke 1 × Stroke 2

Types of bellows
JT —— Nylon tarpaulin (～80°C [176°F])
JC —— Chloroprene (～100°C [212°F])
JK —— Conex (～200°C [392°F])
JA —— Alumix (～250°C [482°F])
●Mounted on both sides.
●Conex is a registered trademark of Teijin, Inc.
●The temperatures shown are the bellows' own durable temperatures, and are not temperatures for cylinder use.

Cylinder specification
W —— Dual stroke cylinder
JW —— Dual stroke cylinder with bellows

DYNA Cylinder Basic model

Mounting type
Blank — Basic type
1 —— Foot mounting type
2 —— Axial foot mounting type
3 —— Flange mounting type
11 —— Trunnion type
11-11T — Trunnion type (with supporting brackets)
●Mounting brackets are already assembled at shipping.
●Orders for mounting brackets only are also accepted.

Sensor switch (For cylinder with magnet)

ZC130	2-lead wire	Solid state type	with indicator lamp	DC10～28V
ZC153	3-lead wire	Solid state type	with indicator lamp	DC4.5～28V
CS5T	2-lead wire	Reed switch type	without indicator lamp	DC5～28V AC85～115V
CS11T	2-lead wire	Reed switch type	with indicator lamp	DC10～28V
CS2F	DIN type	Reed switch type	with indicator lamp	AC85～230V
CS3F	DIN type	Reed switch type	with indicator lamp	DC10～30V
CS4F	DIN type	Reed switch type	with indicator lamp	DC10～30V
CS5F	DIN type	Reed switch type	without indicator lamp	DC3～30V

●For mounting location of sensor switch, see p.534.
●**CS□F** comes with a DIN connector. All others are grommet type.
●Orders for sensor switches only are also accepted.

Rod end accessory
Blank — No rod end accessory
Y —— With Y type knuckle (with pin)
I —— With I type knuckle
●Rod end accessory for one side is included at shipping. If required for both sides, order separately. For order code, see p.538.
●For the cylinder joint and cylinder rod end, see p.1568.
●Orders for rod end accessories only are also accepted.
●For dimensions of rod end accessories, see p.537.

Number of sensor switches
1 —— With 1 sensor switch
2 —— With 2 sensor switches
⋮ ⋮
n —— With n sensor switches

Lead wire length
(Applicable only to **ZC,CS□T** types)
A : 1000mm [39in.]
B : 3000mm [118in.]

Inner Construction and Major Parts

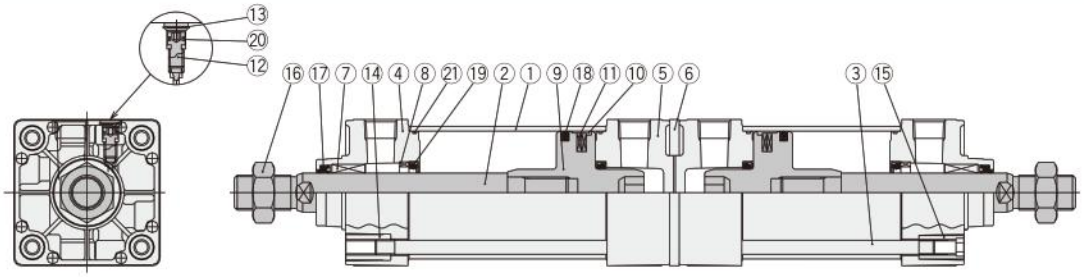

●Operation of dual stroke cylinders

Dual Stroke Cylinders are a set of 2 cylinders connected back to back. The cylinder body can be secured in place and each stroke can be controlled separately. It can also be used to obtain 2-stage or 3-stage strokes by securing the piston rod on one side in place.

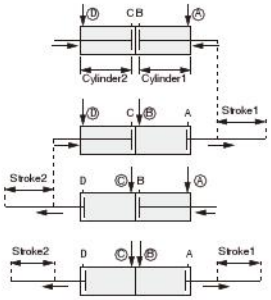

The rods retract stroke 1 and stroke 2 independently when air is supplied from Ports Ⓐ and Ⓓ.

The rod moves stroke 1 when air is supplied from Ports Ⓑ and Ⓓ.

The rod moves stroke 2 when air is supplied from Ports Ⓐ and Ⓒ.

The rod moves stroke 1 and stroke 2 when air is supplied from Ports Ⓑ and Ⓒ.

Major Parts and Materials

No.	Parts	Materials
①	Cylinder tube	Aluminum alloy
②	Piston rod	Carbon steel for machine structural use
③	Tie rod	Carbon steel for machine structural use
④	Rod cover	Aluminum die-casting
⑤	Head cover	Aluminum die-casting
⑥	Spacer	Aluminum alloy
⑦	Rod bushing	Oil impregnated sintered copper alloy
⑧	Keep ring	Aluminum alloy
⑨	Piston	Aluminum alloy
⑩	Wear ring	Plastic
⑪	Magnet	Rubber magnet
⑫	Cushion needle	Carbon steel for machine structural use
⑬	Snap ring	Spring steel
⑭	Tie rod nut R	Rolled steel for general structural use

No.	Parts	Materials
⑮	Tie rod nut H	Chrome-molybdenum steel
⑯	Rod end nut	Rolled steel for general structural use
⑰	Rod seal	Synthetic rubber (NBR)
⑱	Piston seal	Synthetic rubber (NBR)
⑲	Cushion seal	Synthetic rubber (NBR)
⑳	Cushion gasket	Synthetic rubber (NBR)
㉑	Tube gasket	Synthetic rubber (NBR)
—	Foot mounting bracket	Rolled steel for general structural use
—	Axial foot mounting bracket	Cast iron
—	Flange mounting bracket	Rolled steel for general structural use
—	Trunnion bracket	Cast iron
—	Trunnion supporting bracket	Cast iron
—	Knuckles	Cast iron

Seals

Parts / Bore size mm \ Quantity	Rod seal	Piston seal	Cushion seal	Tube gasket	Cushion gasket
	2★	2★	4	4★	4
40	DRP16	PWP40N	CPF20	1.5×40	S5
50	DRP20	PWP50N	CPF24	1.5×50	S6
63	DRP20	PWP63N	CPF24	1.5×63	S6
80	DRP25	PWP80N	CPF30	1.5×80	S6
100	DRP30	PWP100N	CPF35	1.5×100	S6

Remark: Items marked with a star (★) are available as repair kits.
Order codes: For dual stroke cylinders…SRK-NDDAW Bore size

Mass

kg [lb.]

Bore size mm [in.]	Zero stroke mass						Additional mass for each 1mm [0.0394in.] stroke	Mass of 1 sensor switch [with holder]		Mass of 1 knuckle	
	Basic type	Foot mounting type	Axial foot mounting type	Flange mounting type	Trunnion type	Trunnion type (w. supporting bkt.)		ZC□□□ CS□T Note2	CS□F	Y type knuckle (with pin)	I type knuckle
40 [1.575]	1.32 [2.91]	1.45 [3.20]	1.52 [3.35]	1.69 [3.73]	1.80 [3.97]	2.30 [5.07]	0.00300 [0.00662]	0.04 [0.09]	0.05 [0.11]	0.27 [0.60]	0.16 [0.35]
50 [1.969]	2.08 [4.59]	2.25 [4.96]	2.40 [5.29]	2.47 [5.45]	2.63 [5.80]	3.13 [6.90]	0.00428 [0.00944]			0.34 [0.75]	0.21 [0.46]
63 [2.480]	2.78 [6.13]	3.01 [6.64]	3.30 [7.28]	3.31 [7.30]	3.48 [7.67]	3.98 [8.78]	0.00515 [0.01136]	0.04 [0.09]	0.06 [0.13]	0.34 [0.75]	0.21 [0.46]
80 [3.150]	4.74 [10.45]	5.12 [11.29]	5.59 [12.33]	6.34 [13.98]	5.90 [13.01]	6.62 [14.60]	0.00834 [0.01839]			0.87 [1.92]	0.62 [1.37]
100 [3.940]	6.02 [13.27]	6.49 [14.31]	7.30 [16.10]	8.24 [18.17]	7.55 [16.65]	8.27 [18.24]	0.01061 [0.02340]			1.47 [3.24]	1.24 [2.73]

Notes: 1. Applicable to both stroke 1 and stroke 2.
2. For lead wire length A (1000mm [39in.]).

Calculation example: For foot mounting type with bore size of 50mm, and stroke 1 of 100mm and stroke 2 of 50mm, 2.25+(0.00428×100)+(0.00428×50)=2.892kg [6.377lb.]

Dimensions of Basic Type (mm)

DDAW Bore size × Stroke1 × Stroke2

CAD DDAW Bore size

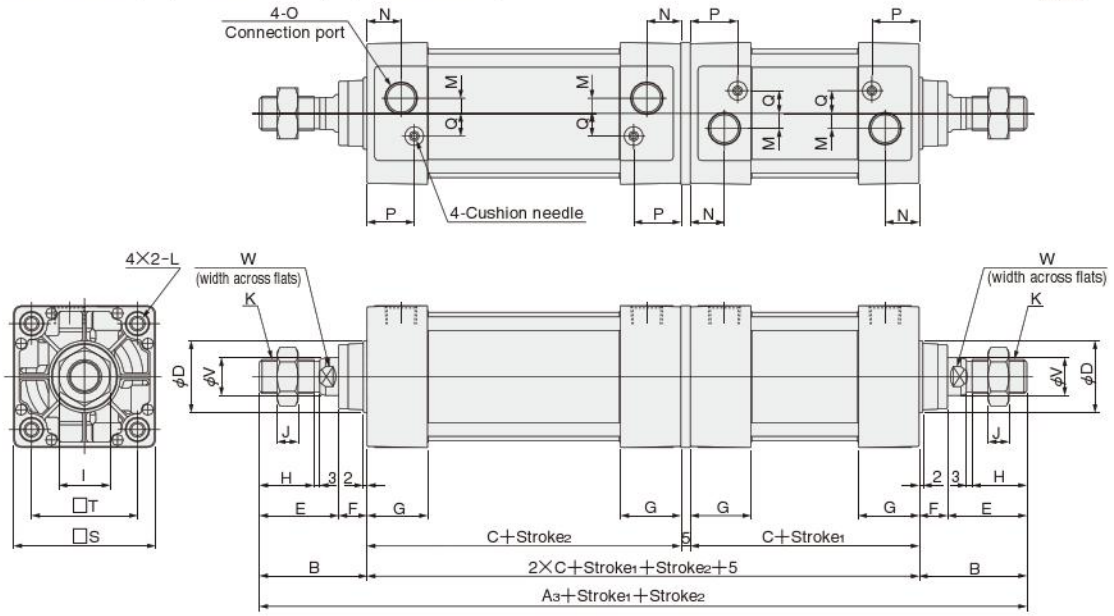

Bore mm [in.] \ Code	A3	B	C	D	E	F	G	H	I	J	K	L
40 [1.575]	289	49	93	32	34	15	31	21	22	8	M14×1.5	M6×1 Depth 14
50 [1.969]	305	57	93	38	42	15	31	29	27	11	M18×1.5	M6×1 Depth 14
63 [2.480]	311	57	96	38	42	15	32	29	27	11	M18×1.5	M8×1.25 Depth 14
80 [3.150]	371	75	108	44	54	21	36	37	32	13	M22×1.5	M10×1.5 Depth 15
100 [3.940]	371	75	108	50	54	21	36	37	36	14	M26×1.5	M10×1.5 Depth 15

Bore mm [in.] \ Code	M	N	O	P	Q	S	T	V	W
40 [1.575]	4	18	Rc1/4	25.5	10	50	37	16	14
50 [1.969]	7	18	Rc3/8	24	12	62	47	20	17
63 [2.480]	8	18	Rc3/8	25	12	75	56	20	17
80 [3.150]	11	20	Rc1/2	29	16	94	70	25	21
100 [3.940]	12	20	Rc1/2	29	18	112	84	30	26

Dimensions of Foot Mounting Type (mm)

DDAW Bore size × Stroke1 × Stroke2 **-1**

CAD Foot mounting bracket only
DDA Bore size -1

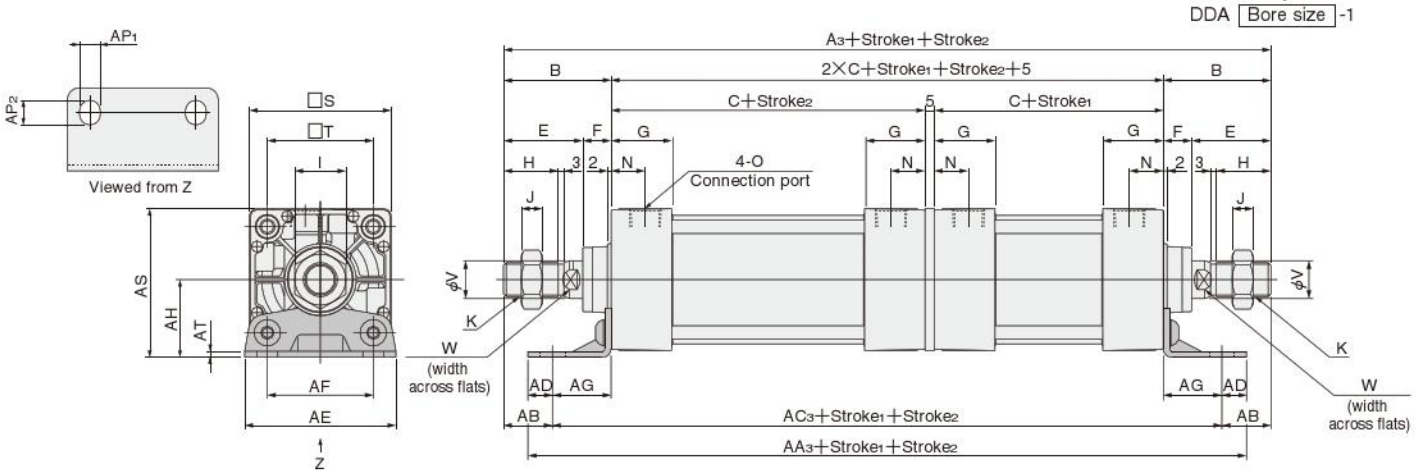

Bore mm [in.] \ Code	A3	B	C	E	F	G	H	I	J	K	N	O	S	T	V	W
40 [1.575]	289	49	93	34	15	31	21	22	8	M14×1.5	18	Rc1/4	50	37	16	14
50 [1.969]	305	57	93	42	15	31	29	27	11	M18×1.5	18	Rc3/8	62	47	20	17
63 [2.480]	311	57	96	42	15	32	29	27	11	M18×1.5	18	Rc3/8	75	56	20	17
80 [3.150]	371	75	108	54	21	36	37	32	13	M22×1.5	20	Rc1/2	94	70	25	21
100 [3.940]	371	75	108	54	21	36	37	36	14	M26×1.5	20	Rc1/2	112	84	30	26

Bore mm [in.] \ Code	AA3	AB	AC3	AD	AE	AF	AG	AH	AP1	AP2	AS	AT
40 [1.575]	263	25.5	238	12.5	57	36	23.5	30	11	13	55	3.2
50 [1.969]	271	29	247	12	68	47	28	36.5	11	13	67.5	3.2
63 [2.480]	285	26	259	13	80	56	31	41	11	13	78.5	3.2
80 [3.150]	313	45	281	16	97	70	30	49	14	16	96	4
100 [3.940]	313	45	281	16	112	84	30	57	14	16	113	4

Dimensions of Axial Foot Mounting Type (mm)

DDAW Bore size × Stroke1 × Stroke2 **-2**

CAD Axial foot mounting bracket only
DDA Bore size -2

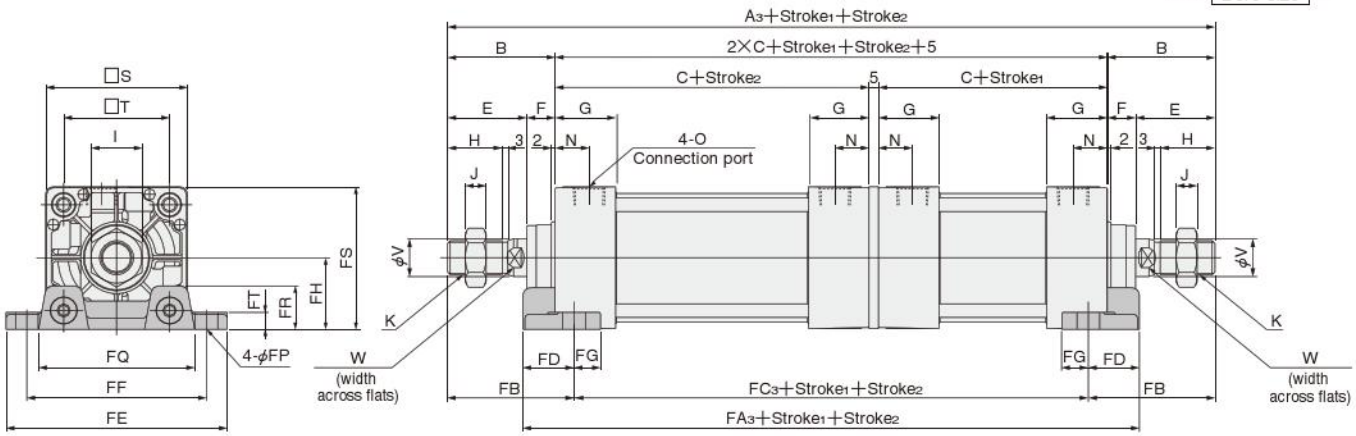

Bore mm [in.] \ Code	A3	B	C	E	F	G	H	I	J	K	N	O	S	T	V	W
40 [1.575]	289	49	93	34	15	31	21	22	8	M14×1.5	18	Rc1/4	50	37	16	14
50 [1.969]	305	57	93	42	15	31	29	27	11	M18×1.5	18	Rc3/8	62	47	20	17
63 [2.480]	311	57	96	42	15	32	29	27	11	M18×1.5	18	Rc3/8	75	56	20	17
80 [3.150]	371	75	108	54	21	36	37	32	13	M22×1.5	20	Rc1/2	94	70	25	21
100 [3.940]	371	75	108	54	21	36	37	36	14	M26×1.5	20	Rc1/2	112	84	30	26

Bore mm [in.] \ Code	FA3	FB	FC3	FD	FE	FF	FG	FH	FP	FQ	FR	FS	FT
40 [1.575]	217	59	171	23	92	70	14	25	12	58	16	50	8
50 [1.969]	221	67	171	25	105	83	14	31	12	68	17	62	9
63 [2.480]	231	67	177	27	117	95	14	38	12	84	22	75.5	9
80 [3.150]	263	88	195	34	147	121	18	47	14	104	28	94	13
100 [3.940]	271	88	195	38	168	140	18	57	14	120	30	113	14

Dimensions of Flange Mounting Type (mm)

DDAW Bore size × Stroke1 × Stroke2 **-3**

CAD Flange mounting bracket only
DDA Bore size -3

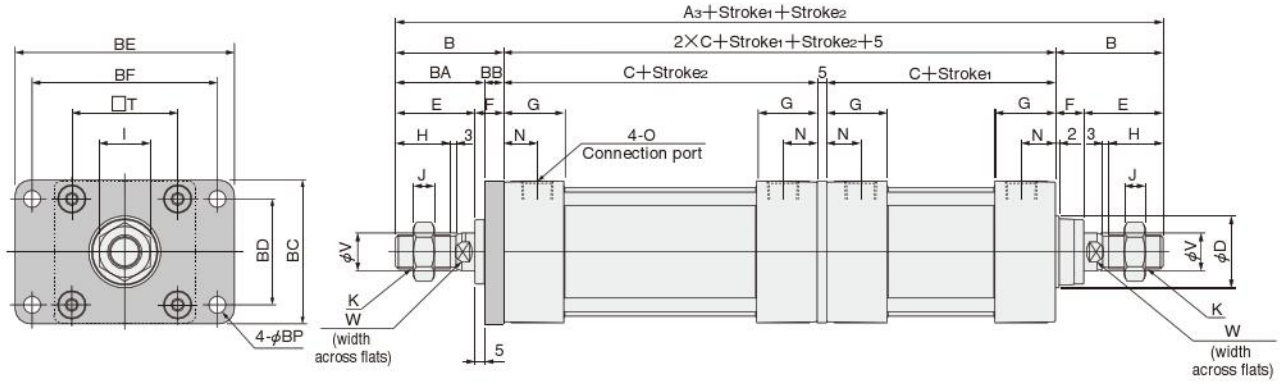

Bore mm[in.] / Code	A3	B	C	D	E	F	G	H	I	J	K	N	O	T	V	W
40 [1.575]	289	49	93	32	34	15	31	21	22	8	M14×1.5	18	Rc1/4	37	16	14
50 [1.969]	305	57	93	38	42	15	31	29	27	11	M18×1.5	18	Rc3/8	47	20	17
63 [2.480]	311	57	96	38	42	15	32	29	27	11	M18×1.5	18	Rc3/8	56	20	17
80 [3.150]	371	75	108	44	54	21	36	37	32	13	M22×1.5	20	Rc1/2	70	25	21
100 [3.940]	371	75	108	50	54	21	36	37	36	14	M26×1.5	20	Rc1/2	84	30	26

Bore mm[in.] / Code	BA	BB	BC	BD	BE	BF	BP
40 [1.575]	39	10	52	36	84	70	7
50 [1.969]	47	10	65	47	104	86	9
63 [2.480]	47	10	76	56	116	98	9
80 [3.150]	59	16	95	70	143	119	12
100 [3.940]	59	16	115	84	162	138	12

Dimensions of Trunnion Type (mm)

DDAW Bore size × Stroke1 × Stroke2 **-11**

CAD Trunnion bracket only DDA Bore size -11

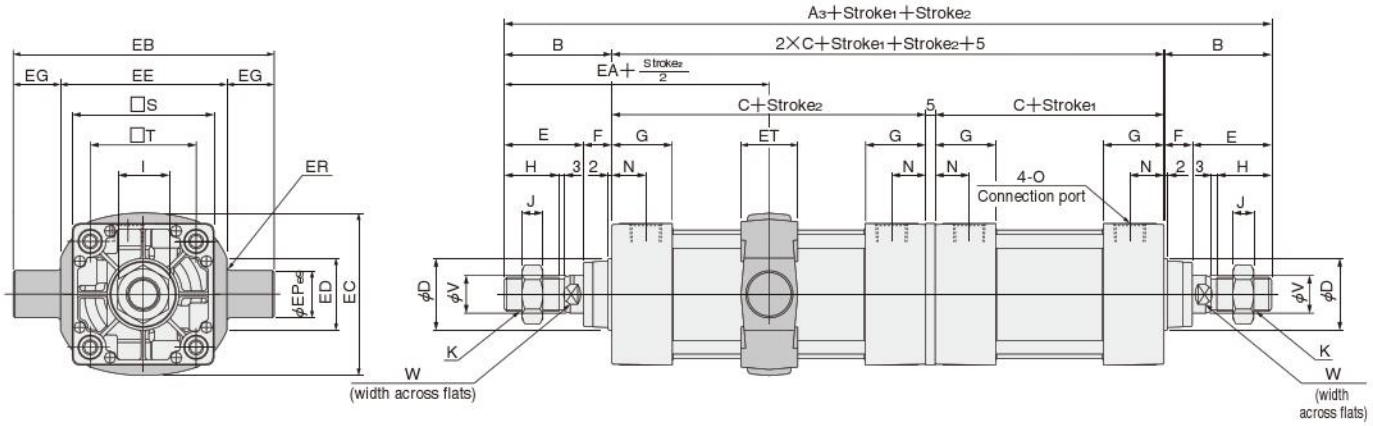

Bore mm [in.] \ Code	A3	B	C	D	E	F	G	H	I	J	K	N	O	S	T	V	W
40 [1.575]	289	49	93	32	34	15	31	21	22	8	M14×1.5	18	Rc1/4	50	37	16	14
50 [1.969]	305	57	93	38	42	15	31	29	27	11	M18×1.5	18	Rc3/8	62	47	20	17
63 [2.480]	311	57	96	38	42	15	32	29	27	11	M18×1.5	18	Rc3/8	75	56	20	17
80 [3.150]	371	75	108	44	54	21	36	37	32	13	M22×1.5	20	Rc1/2	94	70	25	21
100 [3.940]	371	75	108	50	54	21	36	37	36	14	M26×1.5	20	Rc1/2	112	84	30	26

Bore mm [in.] \ Code	EA	EB	EC	ED	EE	EG	EP	ER	ET
40 [1.575]	95.5	113	60	30	63	25	25	R1.6	30
50 [1.969]	103	126	72	30	76	25	25	R1.6	30
63 [2.480]	105	138	87	40	88	25	25	R1.6	30
80 [3.150]	129	164	105	40	114	25	25	R1.6	35
100 [3.940]	129	182	129	44	132	25	25	R2	40

●With Supporting Brackets DDAW Bore size × Stroke1 × Stroke2 **-11-11T**

CAD Trunnion supporting bracket only DDA Bore size -11T

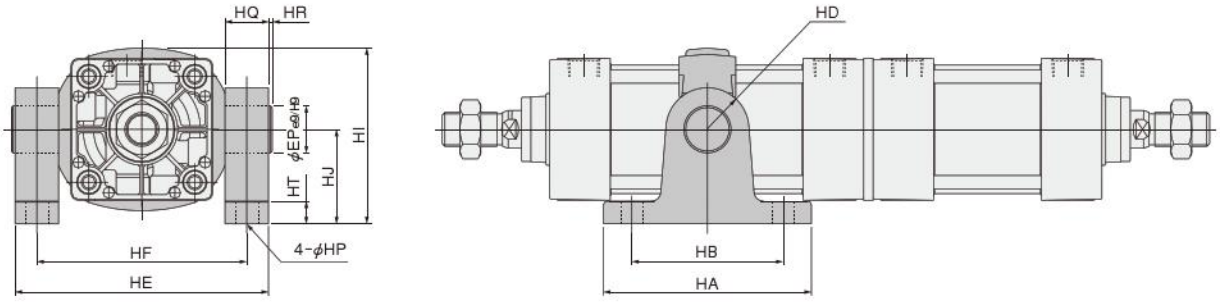

Bore mm [in.] \ Code	HA	HB	HD	HE	HF	HI	HJ	HP	HQ	HR	HT	EP
40 [1.575]	111	80	R22	109	86	80	50	12(Thru hole)	23	2	14	25
50 [1.969]	111	80	R22	122	99	86	50	12(Thru hole)	23	2	14	25
63 [2.480]	111	80	R22	134	111	93.5	50	12(Thru hole)	23	2	14	25
80 [3.150]	121	85	R22	160	137	122.5	70	14(Thru hole)	23	2	14	25
100 [3.940]	121	85	R22	178	155	134.5	70	14(Thru hole)	23	2	14	25

DYNA STROKE ADJUSTING CYLINDERS

Push Side Stroke Adjusting Type
Pull Side Stroke Adjusting Type

Symbols

● Push side stroke adjusting type

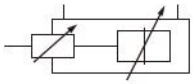

● Pull side stroke adjusting type

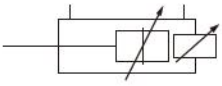

Specifications

Item		Bore size mm [in.] 40 [1.575]	50 [1.969]	63 [2.480]	80 [3.150]	100 [3.940]
Operation type		Double acting type with stroke adjusting mechanism				
Media		Air				
Mounting type		Basic type, Foot type, Axial foot type, Rod side flange type, Trunnion type				
Stroke adjusting range mm [in.]	Push side stroke	−50～0 [−1.969～0] (To the specified stroke)				
	Pull side stroke	−60～0 [−2.362～0] (To the specified stroke)				
Operating pressure range MPa [psi.]		0.05～1.0 [7～145]				
Proof pressure MPa [psi.]		1.5 [218]				
Operating temperature range °C [°F]		−10～70 [14～158] (Freezing prohibited, With sensor is 0～60 [32～140].)				
Operating speed range mm/s [in./sec.]	Push side stroke	50～700 [2.0～27.6]Note 1				
	Pull side stroke	30～700 [1.2～27.6]Note 2				
Cushion	Push side stroke	Head cover side: Variable cushion Rod cover side: Rubber bumperNote 3				
	Pull side stroke	Rod cover side: Variable cushion Head cover side: NoneNote 3				
Cushion stroke mm [in.]		16 [0.630]	20 [0.787]		25 [0.984]	
Lubrication		Not required (If lubrication is required, use Turbine Oil Class 1 (ISO VG32) or equivalent.)				
Port size Rc		1/4	3/8		1/2	

Notes : 1. For pull side. For push side (Stroke adjusting side) 50～500mm/s [2.0～19.7in./sec.] for ϕ40: adjustment 10mm [0.394in.] or less, for ϕ50, 63: adjustment 15mm [0.591in.] or less, for ϕ80, 100: adjustment 20mm [0.787in.] or less. 50～200mm/s [2.0～7.9in./sec.] for ϕ40: adjustment 10mm [0.394in.] or more, for ϕ50, 63: adjustment 15mm [0.591in.] or more, for ϕ80, 100: adjustment 20mm [0.787in.] or more.
2. For push side. For pull side (Stroke adjusting side) 30～500mm/s [1.2～19.7in./sec.] for ϕ40: adjustment 10mm [0.394in.] or less, for ϕ50, 63: adjustment 15mm [0.591in.] or less, for ϕ80, 100: adjustment 20mm [0.787in.] or less. 30～150mm/s [1.2～5.9in./sec.] for ϕ40: adjustment 10mm [0.394in.] or more, for ϕ50, 63: adjustment 15mm [0.591in.] or more, for ϕ80, 100: adjustment 20mm [0.787in.] or more.
3. The cushion seals are mounted on both sides of the cover.

Bore Size and Stroke

● Push side stroke adjusting type

mm

Bore size	Standard strokes	Maximum available stroke
40	50, 75, 100, 150, 200, 250, 300, 350, 400 450, 500, 600, 700	700
50		
63		
80	50, 75, 100, 150, 200, 250, 300, 350, 400 450, 500, 600, 700, 800, 900	900
100		

Remarks: 1. Stroke tolerance; Strokes of 250 or less: $^{+1}_{0}$ [$^{+0.039}_{0}$in.]
Strokes of 251～1000: $^{+1.5}_{0}$ [$^{+0.059}_{0}$in.]
2. For non-standard strokes, consult us.

● Pull side stroke adjusting type

mm

Bore size	Standard strokes	Maximum available stroke
40	50, 75, 100, 150, 200, 250, 300, 350, 400, 450, 500, 600, 700, 800	1000
50	50, 75, 100, 150, 200, 250, 300, 350, 400 450, 500, 600, 700, 800, 900, 1000	1500
63		
80		
100		

Remarks: 1. Stroke tolerance; Strokes of 250 or less: $^{+1}_{0}$ [$^{+0.039}_{0}$in.], strokes of 251～1000: $^{+1.5}_{0}$ [$^{+0.059}_{0}$in.], and strokes of 1001 or more: $^{+2.0}_{0}$ [$^{+0.079}_{0}$in.].
2. For non-standard strokes, consult us.
3. For the maximum available stroke with bellows specification, see p.538.

Order Codes

DDA □ **50×100** – □ – □ – □ – □ □ □

Bore size × Stroke

Types of bellows
- **JT** —— Nylon tarpaulin (～80°C [176°F])
- **JC** —— Chloroprene (～100°C [212°F])
- **JK** —— Conex (～200°C [392°F]
- **JA** —— Alumix (～250°C [482°F])

●Conex is a registered trademark of Teijin, Inc.
●The temperatures shown are the bellows' own durable temperatures, and are not temperatures for cylinder use.

Cylinder specification
- **P** —— Push side stroke adjusting cylinder
- **E** —— Pull side stroke adjusting cylinder
- **JP** —— Push side stroke adjusting cylinder with bellows
- **EJ** —— Pull side stroke adjusting cylinder with bellows

DYNA Cylinder Basic model

Mounting type
- **Blank** — Basic type
- **1** —— Foot mounting type
- **2** —— Axial foot mounting type
- **3** —— Rod side flange mounting type
- **11** —— Trunnion type
- **11-11T** — Trunnion type (with supporting brackets)

●Mounting brackets are already assembled at shipping.
●Orders for mounting brackets only are also accepted.

Sensor switch (For cylinder with magnet)

ZC130	2-lead wire	Solid state type	with indicator lamp	DC10～28V
ZC153	3-lead wire	Solid state type	with indicator lamp	DC4.5～28V
CS5T	2-lead wire	Reed switch type	without indicator lamp	DC5～28V AC85～115V
CS11T	2-lead wire	Reed switch type	with indicator lamp	DC10～28V
CS2F	DIN type	Reed switch type	with indicator lamp	AC85～230V
CS3F	DIN type	Reed switch type	with indicator lamp	DC10～30V
CS4F	DIN type	Reed switch type	with indicator lamp	DC10～30V
CS5F	DIN type	Reed switch type	without indicator lamp	DC3～30V

●For mounting location of sensor switch, see p.534.
●CS□F comes with a DIN connector. All others are grommet type.

Rod end accessory
- **Blank** — No rod end accessory
- **Y** —— With Y type knuckle (with pin)
- **I** —— With I type knuckle

●For the cylinder joint and cylinder rod end, see p.1568.
●Orders for rod end accessories only are also accepted.
●For dimensions of rod end accessories, see p.537.

Number of sensor switches
- **1** —— With 1 sensor switch
- **2** —— With 2 sensor switches
- ⋮ ⋮
- **n** —— With n sensor switches

Lead wire length
(Applicable only to **ZC,CS□T** types)
- **A** : 1000mm [39in.]
- **B** : 3000mm [118in.]

Inner Construction and Major Parts

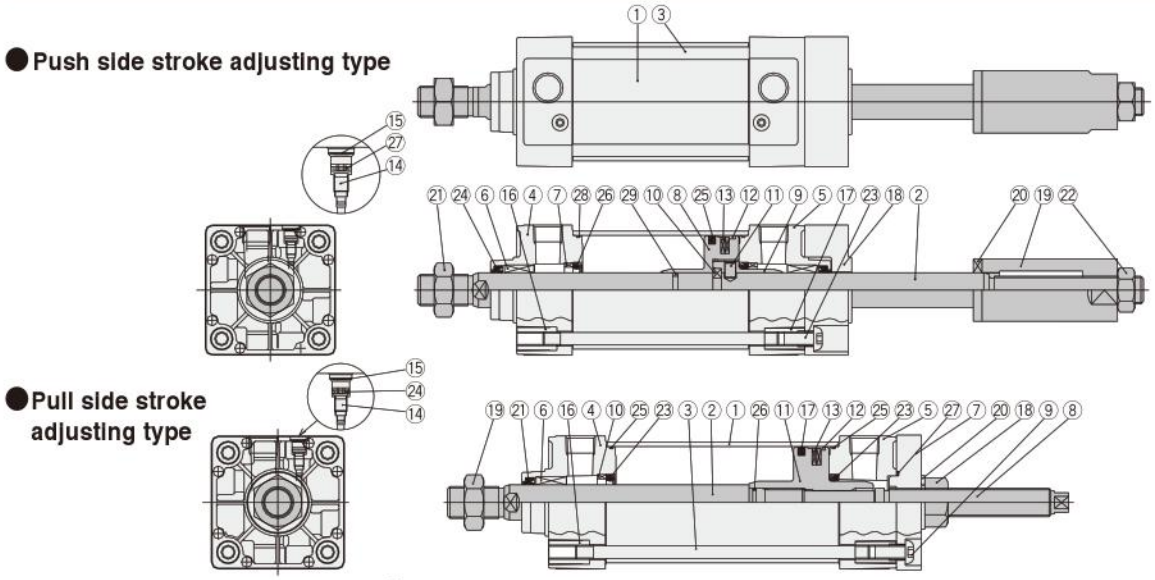

●**Instructions for stroke adjustment**

Stroke adjusting is performed by rotating the adjusting stopper (push side ⑲) or stroke adjusting screw (pull side ⑧).
After completing stroke adjustment, secure the adjusting stopper or adjusting screw in place with a lock nut.
If mounting a sensor switch, move the mounting location of the sensor switch along the length of the adjusted stroke.

Major Parts and Materials

●Push side stroke adjusting type

No.	Parts	Materials
①	Cylinder tube	Aluminum alloy
②	Piston rod	Carbon steel for machine structural use
③	Tie rod	Carbon steel for machine structural use
④	Rod cover	Aluminum die-casting
⑤	Rod cover	Aluminum die-casting
⑥	Rod bushing	Oil impregnated sintered copper alloy
⑦	Keep ring	Aluminum alloy
⑧	Piston	Aluminum alloy
⑨	Piston	Aluminum alloy
⑩	Split ring	Carbon steel for machine structural use
⑪	(Detent) pin	Carbon steel for machine structural use
⑫	Wear ring	Plastic
⑬	Magnet	Rubber magnet
⑭	Cushion needle	Carbon steel for machine structural use
⑮	Snap ring	Spring steel
⑯	Tie rod nut R	Rolled steel for general structural use
⑰	Tie rod nut H	Chrome-molybdenum steel
⑱	Stopper plate	Carbon steel for machine structural use
⑲	Adjusting stopper	Carbon steel for machine structural use
⑳	Rubber bumper	Urethane rubber
㉑	Rod end nut	Rolled steel for general structural use
㉒	Lock nut	Rolled steel for general structural use
㉓	Button bolt	Chrome-molybdenum steel
㉔	Rod seal	Synthetic rubber (NBR)
㉕	Piston seal	Synthetic rubber (NBR)
㉖	Cushion seal	Synthetic rubber (NBR)
㉗	Cushion gasket	Synthetic rubber (NBR)
㉘	Tube gasket	Synthetic rubber (NBR)
㉙	Piston gasket	Synthetic rubber (NBR)

●Pull side stroke adjusting type

No.	Parts	Materials
①	Cylinder tube	Aluminum alloy
②	Piston rod	Carbon steel for machine structural use
③	Tie rod	Carbon steel for machine structural use
④	Rod cover	Aluminum die-casting
⑤	Head cover	Aluminum die-casting
⑥	Rod bushing	Oil impregnated sintered copper alloy
⑦	Housing	Carbon steel for machine structural use
⑧	Adjusting screw	Carbon steel for machine structural use
⑨	Button bolt	Chrome-molybdenum steel
⑩	Keep ring	Aluminum alloy
⑪	Piston	Aluminum alloy
⑫	Wear ring	Plastic
⑬	Magnet	Rubber magnet
⑭	Cushion needle	Carbon steel for machine structural use
⑮	Snap ring	Spring steel
⑯	Tie rod nut R	Rolled steel for general structural use
⑰	Tie rod nut H	Chrome-molybdenum steel
⑱	Lock nut	Rolled steel for general structural use
⑲	Rod end nut	Rolled steel for general structural use
⑳	Seal washer	Nitrile rubber with metal ring
㉑	Rod seal	Synthetic rubber (NBR)
㉒	Piston seal	Synthetic rubber (NBR)
㉓	Cushion seal	Synthetic rubber (NBR)
㉔	Cushion gasket	Synthetic rubber (NBR)
㉕	Tube gasket	Synthetic rubber (NBR)
㉖	Piston gasket	Synthetic rubber (NBR)
㉗	Housing gasket	Synthetic rubber (NBR)

Seals

●Push side stroke adjusting type

Parts	Rod seal	Piston seal	Cushion seal	Tube gasket	Cushion gasket	Piston gasket
Quantity / Bore mm	2★	1★	2	2★	2	1
40	DRP16	PWP40N	CPF20	1.5×40	S5	P12
50	DRP20	PWP50N	CPF24	1.5×50	S6	P16
63	DRP20	PWP63N	CPF24	1.5×63	S6	P16
80	DRP25	PWP80N	CPF30	1.5×80	S6	P21
100	DRP30	PWP100N	CPF35	1.5×100	S6	P25

●Pull side stroke adjusting type

Parts	Rod seal	Piston seal	Cushion seal	Tube gasket	Cushion gasket	Piston gasket	Housing gasket	Seal washer
Quantity / Bore mm	1	1	2	2	2	1	1	1
40	DRP16	PWP40N	CPF20	1.5×40	S5	S10	S26	DT1-12
50	DRP20	PWP50N	CPF24	1.5×50	S6	S14	S32	DT1-16
63	DRP20	PWP63N	CPF24	1.5×63	S6	S14	S32	DT1-16
80	DRP25	PWP80N	CPF30	1.5×80	S6	S18	S38	DT1-20
100	DRP30	PWP100N	CPF35	1.5×100	S6	S18	S38	DT1-20

Remark: Items marked with a star (★) are available as repair kits.

Order codes: For push side stroke adjusting cylinders···SRK-NDDAP Bore size

Mass

●Push side stroke adjusting type

kg [lb.]

Bore size mm [in.]	Zero stroke mass						Additional mass for each 1mm [0.0394in.] stroke	Mass of 1 sensor switch [with holder]		Mass of 1 knuckle	
	Basic type	Foot mounting type	Axial foot mounting type	Flange mounting type	Trunnion type	Trunnion type (with supporting brackets)		ZC□□□ CS□T Note	CS□F	Y type knuckle (with pin)	I type knuckle
40 [1.575]	1.57 [3.46]	1.70 [3.75]	1.77 [3.90]	1.94 [4.28]	2.05 [4.52]	2.55 [5.62]	0.00457 [0.01008]	0.04 [0.09]	0.05 [0.11]	0.27 [0.60]	0.16 [0.35]
50 [1.969]	2.53 [5.58]	2.70 [5.95]	2.85 [6.28]	2.92 [6.44]	3.08 [6.79]	3.58 [7.89]	0.00673 [0.01484]			0.34 [0.75]	0.21 [0.46]
63 [2.480]	3.38 [7.45]	3.61 [7.96]	3.90 [8.60]	3.91 [8.62]	4.08 [9.00]	4.58 [10.10]	0.00760 [0.01676]	0.04 [0.09]	0.06 [0.13]	0.34 [0.75]	0.21 [0.46]
80 [3.150]	6.10 [13.45]	6.48 [14.29]	6.95 [15.32]	7.70 [16.98]	7.26 [16.01]	7.98 [17.60]	0.01217 [0.02683]			0.87 [1.92]	0.62 [1.37]
100 [3.940]	8.45 [18.63]	8.92 [19.67]	9.73 [21.45]	10.67 [23.53]	9.98 [22.01]	10.70 [23.59]	0.01612 [0.03554]			1.47 [3.24]	1.24 [2.73]

Note: For lead wire length A (1000mm [39in.]).

Calculation example: For foot mounting type with bore size of 50mm, and stroke of 100 mm,
2.70+(0.00673×100)=3.373kg [7.437lb.]

●Pull side stroke adjusting type

kg [lb.]

Bore size mm [in.]	Zero stroke mass						Additional mass for each 1mm [0.0394in.] stroke	Mass of 1 sensor switch [with holder]		Mass of 1 knuckle	
	Basic type	Foot mounting type	Axial foot mounting type	Flange mounting type	Trunnion type	Trunnion type (with supporting brackets)		ZC□□□ CS□T Note	CS□F	Y type knuckle (with pin)	I type knuckle
40 [1.575]	1.14 [2.51]	1.27 [2.80]	1.34 [2.95]	1.51 [3.33]	1.62 [3.57]	2.12 [4.67]	0.00300 [0.00662]	0.04 [0.09]	0.05 [0.11]	0.27 [0.60]	0.16 [0.35]
50 [1.969]	1.87 [4.12]	2.04 [4.50]	2.19 [4.83]	2.26 [4.98]	2.42 [5.34]	2.92 [6.44]	0.00428 [0.00944]			0.34 [0.75]	0.21 [0.46]
63 [2.480]	2.54 [5.60]	2.77 [6.11]	3.06 [6.75]	3.07 [6.77]	3.24 [7.14]	3.74 [8.25]	0.00515 [0.01136]	0.04 [0.09]	0.06 [0.13]	0.34 [0.75]	0.21 [0.46]
80 [3.150]	4.67 [10.30]	5.05 [11.14]	5.52 [12.17]	6.27 [13.83]	5.83 [12.86]	6.55 [14.44]	0.00834 [0.01839]			0.87 [1.92]	0.62 [1.37]
100 [3.940]	6.35 [14.00]	6.82 [15.04]	7.63 [16.82]	8.57 [18.90]	7.88 [17.38]	8.60 [18.96]	0.01061 [0.02340]			1.47 [3.24]	1.24 [2.73]

Note: For lead wire length A (1000mm [39in.]).

Calculation example: For foot mounting type with bore size of 50mm, and stroke of 100 mm,
2.04+(0.00428×100)=2.468kg [5.442lb.]

Dimensions of Push Side Stroke Adjusting Basic Type (mm)

DDAP Bore size × Stroke

CAD DDAP Bore size

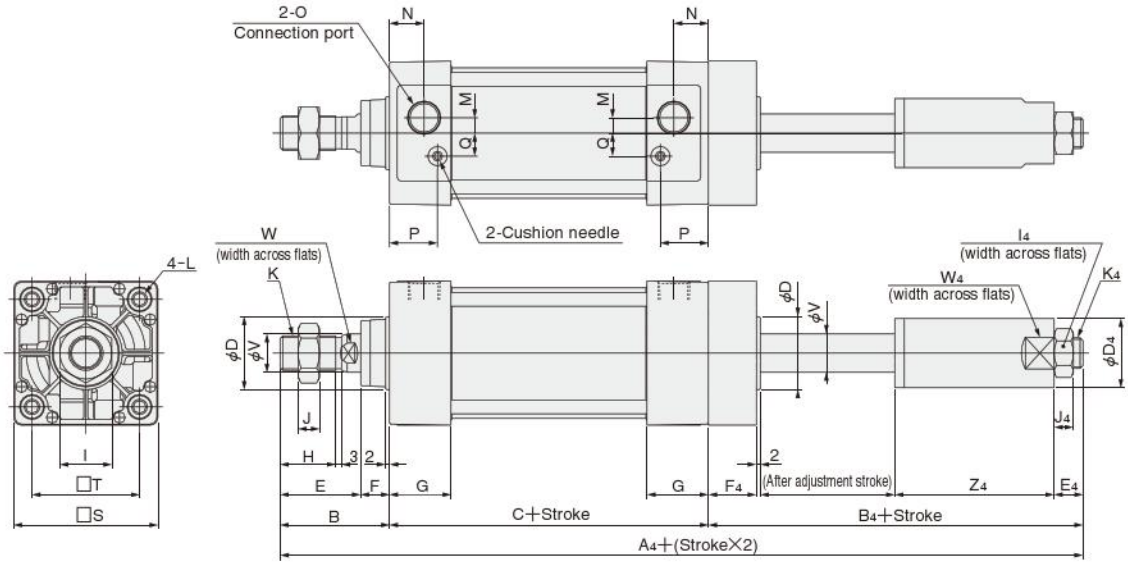

Bore mm [in.] \ Code	A4	B	B4	C	D	D4	E	E4	F	F4	G	H	I	I4	J
40 [1.575]	254	49	112	93	32	30	34	11	15	25	31	21	22	19	8
50 [1.969]	274	57	124	93	38	36	42	14	15	25	31	29	27	22	11
63 [2.480]	277	57	124	96	38	36	42	14	15	25	32	29	27	22	11
80 [3.150]	321	75	138	108	44	45	54	17	21	35	36	37	32	27	13
100 [3.940]	321	75	138	108	50	50	54	17	21	35	36	37	36	27	14

Bore mm [in.] \ Code	J4	K	K4	L	M	N	O	P	Q	S	T	V	W	W4	Z4
40 [1.575]	7	M14×1.5	M12×1.25	M6×1 Depth 14	4	18	Rc1/4	25.5	10	50	37	16	14	27	74
50 [1.969]	10	M18×1.5	M16×1.5	M6×1 Depth 14	7	18	Rc3/8	24	12	62	47	20	17	32	83
63 [2.480]	10	M18×1.5	M16×1.5	M8×1.25 Depth 14	8	18	Rc3/8	25	12	75	56	20	17	32	83
80 [3.150]	12	M22×1.5	M20×1.5	M10×1.5 Depth 15	11	20	Rc1/2	29	16	94	70	25	21	41	84
100 [3.940]	12	M26×1.5	M20×1.5	M10×1.5 Depth 15	12	20	Rc1/2	29	18	112	84	30	26	46	84

Dimensions of Push Side Stroke Adjusting Foot Mounting Type (mm)

DDAP Bore size × Stroke **-1**

CAD Foot mounting bracket only
DDA Bore size -1

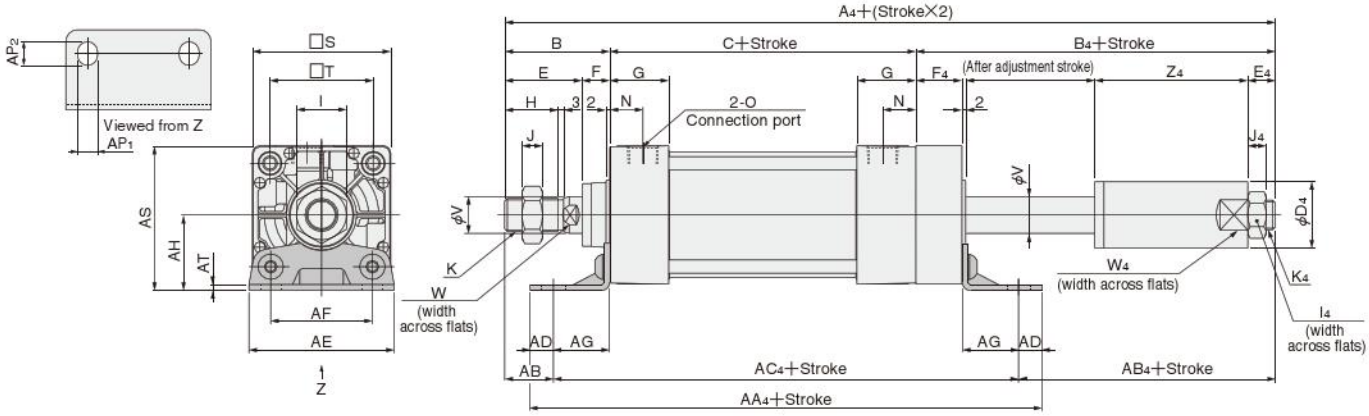

Bore mm [in.] \ Code	A4	B	B4	C	D4	E	E4	F	F4	G	H	I	I4	J	J4	K	K4	N	O
40 [1.575]	254	49	112	93	30	34	11	15	25	31	21	22	19	8	7	M14×1.5	M12×1.25	18	Rc1/4
50 [1.969]	274	57	124	93	36	42	14	15	25	31	29	27	22	11	10	M18×1.5	M16×1.5	18	Rc3/8
63 [2.480]	277	57	124	96	36	42	14	15	25	32	29	27	22	11	10	M18×1.5	M16×1.5	18	Rc3/8
80 [3.150]	321	75	138	108	45	54	17	21	35	36	37	32	27	13	12	M22×1.5	M20×1.5	20	Rc1/2
100 [3.940]	321	75	138	108	50	54	17	21	35	36	37	36	27	14	12	M26×1.5	M20×1.5	20	Rc1/2

Bore mm [in.] \ Code	S	T	V	W	W4	Z4	AA4	AB	AB4	AC4	AD	AE	AF	AG	AH	AP1	AP2	AS	AT
40 [1.575]	50	37	16	14	27	74	190	25.5	63.5	165	12.5	57	36	23.5	30	11	13	55	3.2
50 [1.969]	62	47	20	17	32	83	198	29	71	174	12	68	47	28	36.5	11	13	67.5	3.2
63 [2.480]	75	56	20	17	32	83	209	26	68	183	13	80	56	31	41	11	13	78.5	3.2
80 [3.150]	94	70	25	21	41	84	235	45	73	203	16	97	70	30	49	14	16	96	4
100 [3.940]	112	84	30	26	46	84	235	45	73	203	16	112	84	30	57	14	16	113	4

Dimensions of Push Side Stroke Adjusting Axial Foot Mounting Type (mm)

DDAP Bore size × Stroke **-2**

CAD Axial foot mounting bracket only
DDA Bore size -2

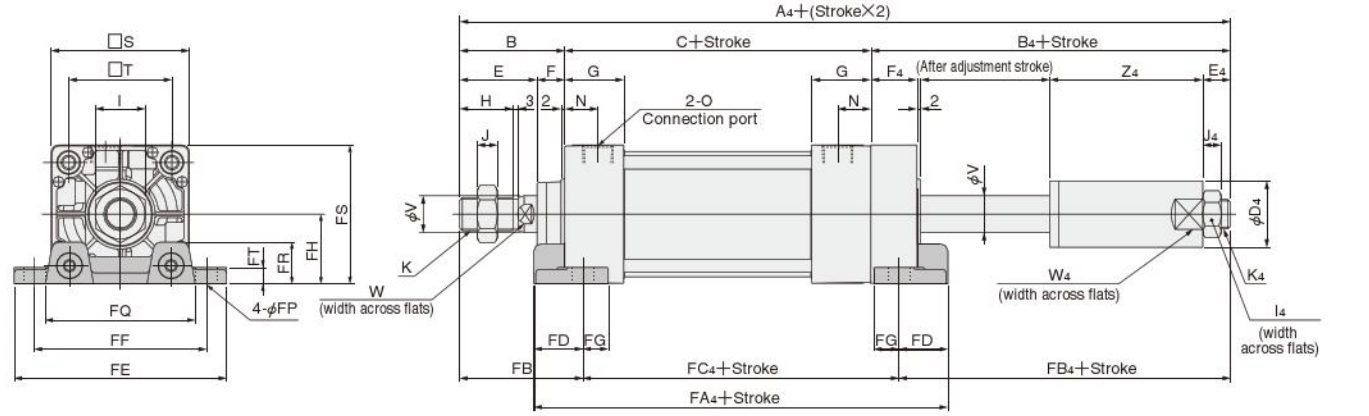

Bore mm [in.] \ Code	A4	B	B4	C	D4	E	E4	F	F4	G	H	I	I4	J	J4	K	K4	N	O
40 [1.575]	254	49	112	93	30	34	11	15	25	31	21	22	19	8	7	M14×1.5	M12×1.25	18	Rc1/4
50 [1.969]	274	57	124	93	36	42	14	15	25	31	29	27	22	11	10	M18×1.5	M16×1.5	18	Rc3/8
63 [2.480]	277	57	124	96	36	42	14	15	25	32	29	27	22	11	10	M18×1.5	M16×1.5	18	Rc3/8
80 [3.150]	321	75	138	108	45	54	17	21	35	36	37	32	27	13	12	M22×1.5	M20×1.5	20	Rc1/2
100 [3.940]	321	75	138	108	50	54	17	21	35	36	37	36	27	14	12	M26×1.5	M20×1.5	20	Rc1/2

Bore mm [in.] \ Code	S	T	V	W	W4	Z4	FA4	FB	FB4	FC4	FD	FE	FF	FG	FH	FP	FQ	FR	FS	FT
40 [1.575]	50	37	16	14	27	74	144	59	97	98	23	92	70	14	25	12	58	16	50	8
50 [1.969]	62	47	20	17	32	83	148	67	109	98	25	105	83	14	31	12	68	17	62	9
63 [2.480]	75	56	20	17	32	83	155	67	109	101	27	117	95	14	38	12	84	22	75.5	9
80 [3.150]	94	70	25	21	41	84	185	88	116	117	34	147	121	18	47	14	104	28	94	13
100 [3.940]	112	84	30	26	46	84	193	88	116	117	38	168	140	18	57	14	120	30	113	14

Dimensions of Push Side Stroke Adjusting Rod Side Flange Mounting Type (mm)

DDAP Bore size × Stroke **-3**

CAD Flange mounting bracket only
DDA Bore size -3

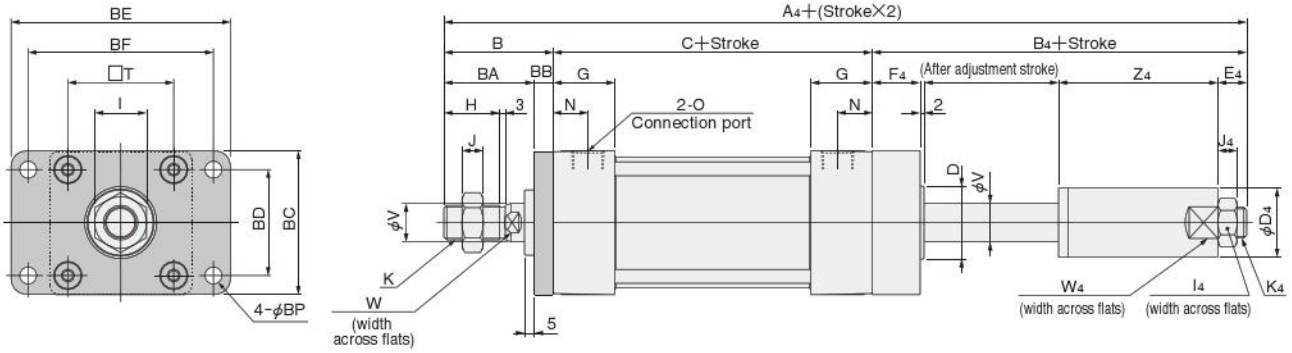

Bore mm[in] \ Code	A4	B	B4	C	D4	E4	F4	G	H	I	I4	J	J4	K	K4
40 [1.575]	254	49	112	93	30	11	25	31	21	22	19	8	7	M14×1.5	M12×1.25
50 [1.969]	274	57	124	93	36	14	25	31	29	27	22	11	10	M18×1.5	M16×1.5
63 [2.480]	277	57	124	96	36	14	25	32	29	27	22	11	10	M18×1.5	M16×1.5
80 [3.150]	321	75	138	108	45	17	35	36	37	32	27	13	12	M22×1.5	M20×1.5
100 [3.940]	321	75	138	108	50	17	35	36	37	36	27	14	12	M26×1.5	M20×1.5

Bore mm[in] \ Code	N	O	T	V	W	W4	Z4	BA	BB	BC	BD	BE	BF	BP
40 [1.575]	18	Rc1/4	37	16	14	27	74	39	10	52	36	84	70	7
50 [1.969]	18	Rc3/8	47	20	17	32	83	47	10	65	47	104	86	9
63 [2.480]	18	Rc3/8	56	20	17	32	83	47	10	76	56	116	98	9
80 [3.150]	20	Rc1/2	70	25	21	41	84	59	16	95	70	143	119	12
100 [3.940]	20	Rc1/2	84	30	26	46	84	59	16	115	84	162	138	12

Dimensions of Push Side Stroke Adjusting Trunnion Type (mm)

DDAP Bore size × Stroke **-11**

CAD Trunnion bracket only
DDA Bore size -11

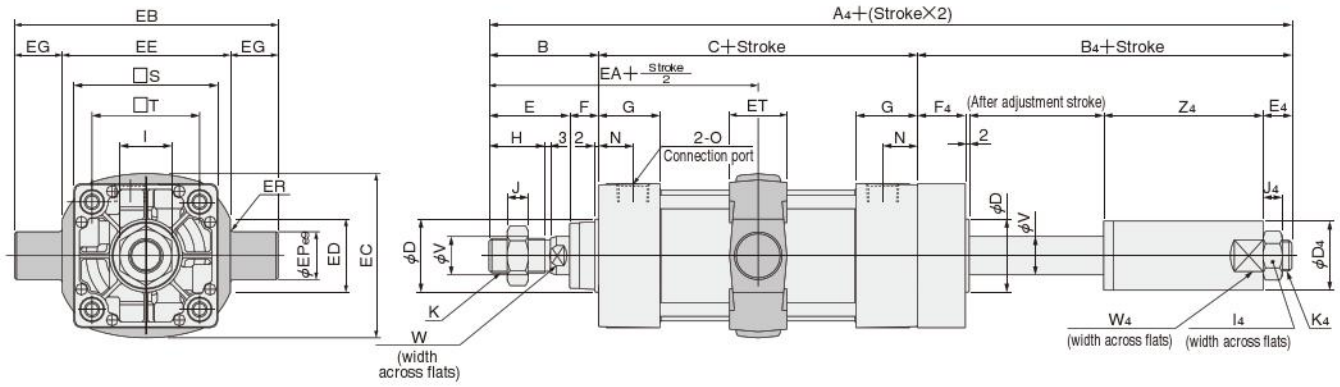

Bore mm [in.] \ Code	A4	B	B4	C	D	D4	E	E4	F	F4	G	H	I	I4	J	J4	K	K4
40 [1.575]	254	49	112	93	32	30	34	11	15	25	31	21	22	19	8	7	M14×1.5	M12×1.25
50 [1.969]	274	57	124	93	38	36	42	14	15	25	31	29	27	22	11	10	M18×1.5	M16×1.5
63 [2.480]	277	57	124	96	38	36	42	14	15	25	32	29	27	22	11	10	M18×1.5	M16×1.5
80 [3.150]	321	75	138	108	44	45	54	17	21	35	36	37	32	27	13	12	M22×1.5	M20×1.5
100 [3.940]	321	75	138	108	50	50	54	17	21	35	36	37	36	27	14	12	M26×1.5	M20×1.5

Bore mm [in.] \ Code	N	O	S	T	V	W	W4	Z4	EA	EB	EC	ED	EE	EG	EP	ER	ET
40 [1.575]	18	Rc1/4	50	37	16	14	27	74	95.5	113	60	30	63	25	25	R1.6	30
50 [1.969]	18	Rc3/8	62	47	20	17	32	83	103.5	126	72	30	76	25	25	R1.6	30
63 [2.480]	18	Rc3/8	75	56	20	17	32	83	105	138	87	40	88	25	25	R1.6	30
80 [3.150]	20	Rc1/2	94	70	25	21	41	84	129	164	105	40	114	25	25	R1.6	35
100 [3.940]	20	Rc1/2	112	84	30	26	46	84	129	182	129	44	132	25	25	R2	40

●With Supporting Brackets DDAP Bore size × Stroke -11-11T

CAD Trunnion supporting bracket only
DDA Bore size -11T

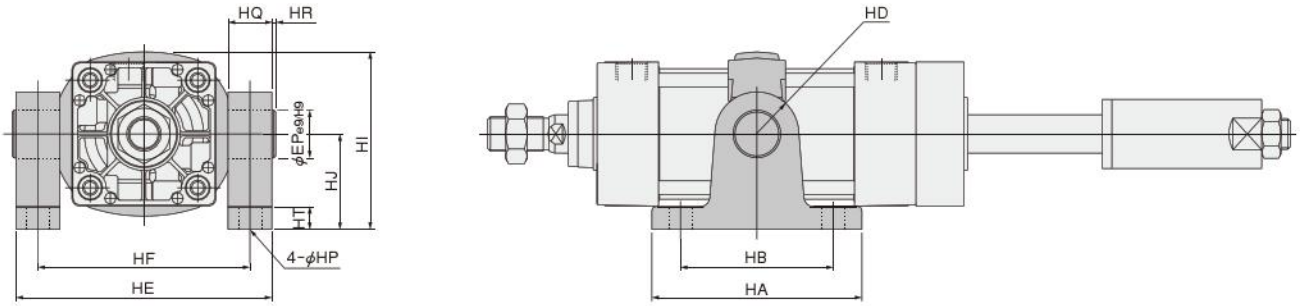

Bore mm [in.] \ Code	HA	HB	HD	HE	HF	HI	HJ	HP	HQ	HR	HT	EP
40 [1.575]	111	80	R22	109	86	80	50	12 (Thru hole)	23	2	14	25
50 [1.969]	111	80	R22	122	99	86	50	12 (Thru hole)	23	2	14	25
63 [2.480]	111	80	R22	134	111	93.5	50	12 (Thru hole)	23	2	14	25
80 [3.150]	121	85	R22	160	137	122.5	70	14 (Thru hole)	23	2	14	25
100 [3.940]	121	85	R22	178	155	134.5	70	14 (Thru hole)	23	2	14	25

Dimensions of Pull Side Stroke Adjusting Basic Type (mm)

DDAE Bore size × Stroke

CAD DDAE Bore size

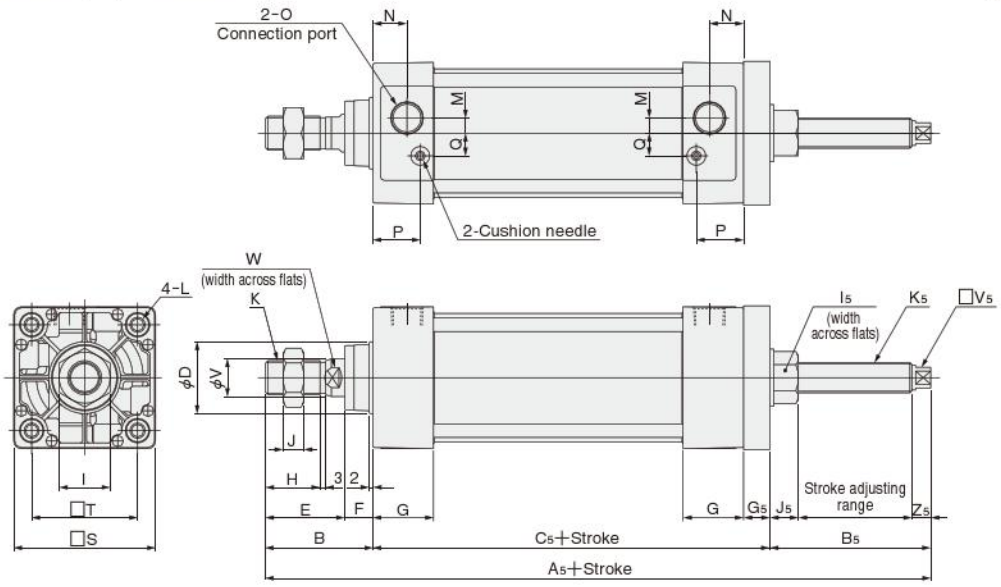

Bore mm[in.] / Code	A5	B	B5	C5	D	E	F	G	G5	H	I	I5	J	J5	K	K5
40 [1.575]	238	49	82	107	32	34	15	31	14	21	22	19	8	12	M14×1.5	M12×1.25
50 [1.969]	249	57	85	107	38	42	15	31	14	29	27	24	11	15	M18×1.5	M16×1.5
63 [2.480]	252	57	85	110	38	42	15	32	14	29	27	24	11	15	M18×1.5	M16×1.5
80 [3.150]	296	75	91	130	44	54	21	36	22	37	32	30	13	19	M22×1.5	M20×1.5
100 [3.940]	296	75	91	130	50	54	21	36	22	37	36	30	14	19	M26×1.5	M20×1.5

Bore mm[in.] / Code	L		M	N	O	P	Q	S	T	V	V5	W	Z5
40 [1.575]	M6×1	Depth 14	4	18	Rc1/4	25.5	10	50	37	16	8	14	10
50 [1.969]	M6×1	Depth 14	7	18	Rc3/8	24	12	62	47	20	11	17	10
63 [2.480]	M8×1.25	Depth 14	8	18	Rc3/8	25	12	75	56	20	11	17	10
80 [3.150]	M10×1.5	Depth 15	11	20	Rc1/2	29	16	94	70	25	14	21	12
100 [3.940]	M10×1.5	Depth 15	12	20	Rc1/2	29	18	112	84	30	14	26	12

Dimensions of Pull Side Stroke Adjusting Foot Mounting Type (mm)

DDAE Bore size × Stroke **-1**

Foot mounting bracket only
DDA Bore size -1

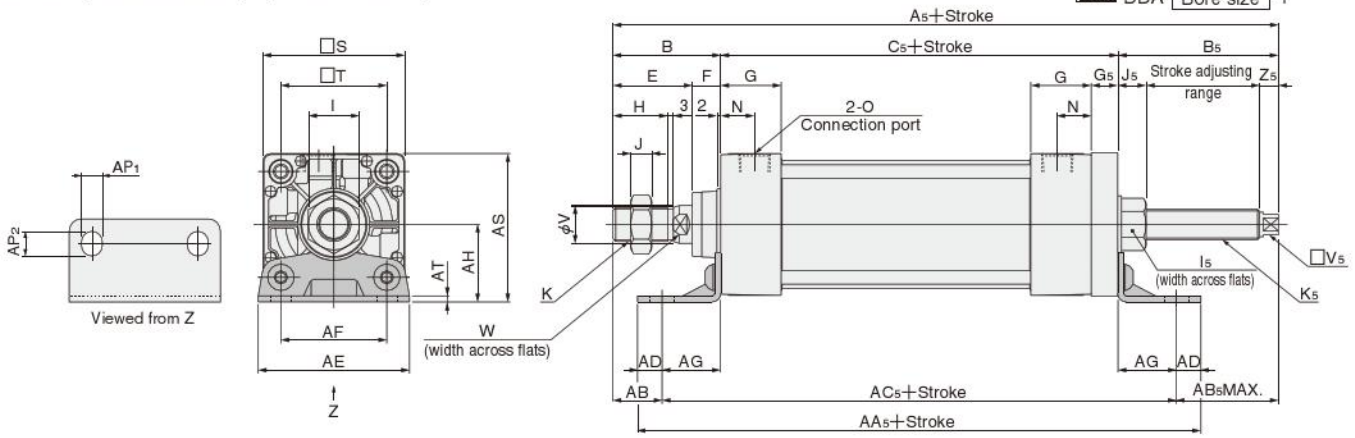

Bore mm [in.] / Code	A5	B	B5	C5	E	F	G	G5	H	I	I5	J	J5	K	K5
40 [1.575]	238	49	82	107	34	15	31	14	21	22	19	8	12	M14×1.5	M12×1.25
50 [1.969]	249	57	85	107	42	15	31	14	29	27	24	11	15	M18×1.5	M16×1.5
63 [2.480]	252	57	85	110	42	15	32	14	29	27	24	11	15	M18×1.5	M16×1.5
80 [3.150]	296	75	91	130	54	21	36	22	37	32	30	13	19	M22×1.5	M20×1.5
100 [3.940]	296	75	91	130	54	21	36	22	37	36	30	14	19	M26×1.5	M20×1.5

Bore mm [in.] / Code	N	O	S	T	V	V5	W	Z5	AA5	AB	AB5	AC5	AD	AE	AF	AG	AH	AP1	AP2	AS	AT
40 [1.575]	18	Rc1/4	50	37	16	8	14	10	179	25.5	58.5	154	12.5	57	36	23.5	30	11	13	55	3.2
50 [1.969]	18	Rc3/8	62	47	20	11	17	10	187	29	57	163	12	68	47	28	36.5	11	13	67.5	3.2
63 [2.480]	18	Rc3/8	75	56	20	11	17	10	198	26	54	172	13	80	56	31	41	11	13	78.5	3.2
80 [3.150]	20	Rc1/2	94	70	25	14	21	12	222	45	61	190	16	97	70	30	49	14	16	96	4
100 [3.940]	20	Rc1/2	112	84	30	14	26	12	222	45	61	190	16	112	84	30	57	14	16	113	4

Dimensions of Pull Side Stroke Adjusting Axial Foot Mounting Type (mm)

DDAE Bore size × Stroke **-2**

Axial foot mounting bracket only
DDA Bore size -2

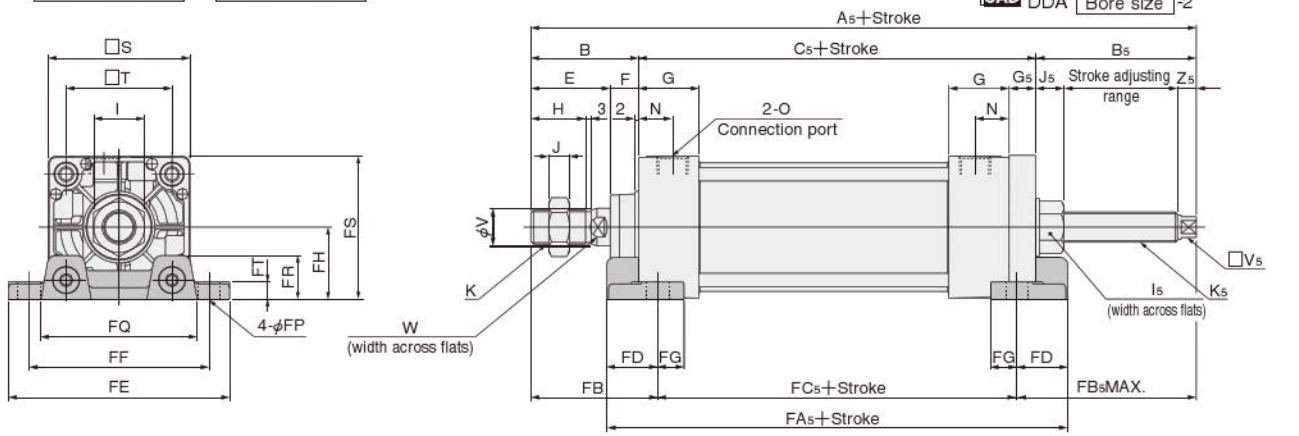

Bore mm [in.] / Code	A5	B	B5	C5	E	F	G	G5	H	I	I5	J	J5	K	K5
40 [1.575]	238	49	82	107	34	15	31	14	21	22	19	8	12	M14×1.5	M12×1.25
50 [1.969]	249	57	85	107	42	15	31	14	29	27	24	11	15	M18×1.5	M16×1.5
63 [2.480]	252	57	85	110	42	15	32	14	29	27	24	11	15	M18×1.5	M16×1.5
80 [3.150]	296	75	91	130	54	21	36	22	37	32	30	13	19	M22×1.5	M20×1.5
100 [3.940]	296	75	91	130	54	21	36	22	37	36	30	14	19	M26×1.5	M20×1.5

Bore mm [in.] / Code	N	O	S	T	V	V5	W	Z5	FA5	FB	FB5	FC5	FD	FE	FF	FG	FH	FP	FQ	FR	FS	FT
40 [1.575]	18	Rc1/4	50	37	16	8	14	10	133	59	92	87	23	92	70	14	25	12	58	16	50	8
50 [1.969]	18	Rc3/8	62	47	20	11	17	10	137	67	95	87	25	105	83	14	31	12	68	17	62	9
63 [2.480]	18	Rc3/8	75	56	20	11	17	10	144	67	95	90	27	117	95	14	38	12	84	22	75.5	9
80 [3.150]	20	Rc1/2	94	70	25	14	21	12	172	88	104	104	34	147	121	18	47	14	104	28	94	13
100 [3.940]	20	Rc1/2	112	84	30	14	26	12	180	88	104	104	38	168	140	18	57	14	120	30	113	14

Dimensions of Pull Side Stroke Adjusting Rod Side Flange Mounting Type (mm)

DDAE Bore size × Stroke **-3**

CAD Flange mounting bracket only
DDA Bore size -3

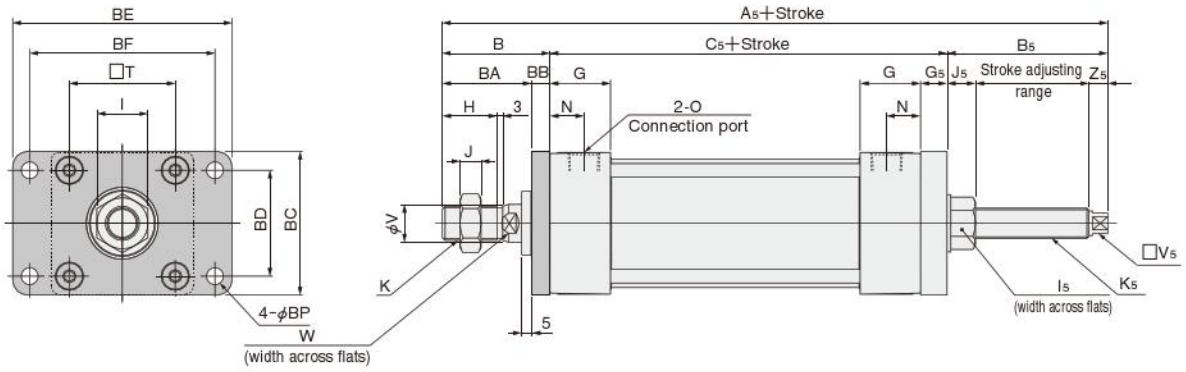

Bore mm[in.] \ Code	A5	B	B5	C5	G	G5	H	I	I5	J	J5	K	K5
40 [1.575]	238	49	82	107	31	14	21	22	19	8	12	M14×1.5	M12×1.25
50 [1.969]	249	57	85	107	31	14	29	27	24	11	15	M18×1.5	M16×1.5
63 [2.480]	252	57	85	110	32	14	29	27	24	11	15	M18×1.5	M16×1.5
80 [3.150]	296	75	91	130	36	22	37	32	30	13	19	M22×1.5	M20×1.5
100 [3.940]	296	75	91	130	36	22	37	36	30	14	19	M26×1.5	M20×1.5

Bore mm[in.] \ Code	N	O	T	V	V5	W	Z5	BA	BB	BC	BD	BE	BF	BP
40 [1.575]	18	Rc1/4	37	16	8	14	10	39	10	52	36	84	70	7
50 [1.969]	18	Rc3/8	47	20	11	17	10	47	10	65	47	104	86	9
63 [2.480]	18	Rc3/8	56	20	11	17	10	47	10	76	56	116	98	9
80 [3.150]	20	Rc1/2	70	25	14	21	12	59	16	95	70	143	119	12
100 [3.940]	20	Rc1/2	84	30	14	26	12	59	16	115	84	162	138	12

Dimensions of Pull Side Stroke Adjusting Trunnion Type (mm)

DDAE Bore size × Stroke **-11**

CAD Trunnion bracket only
DDA Bore size -11

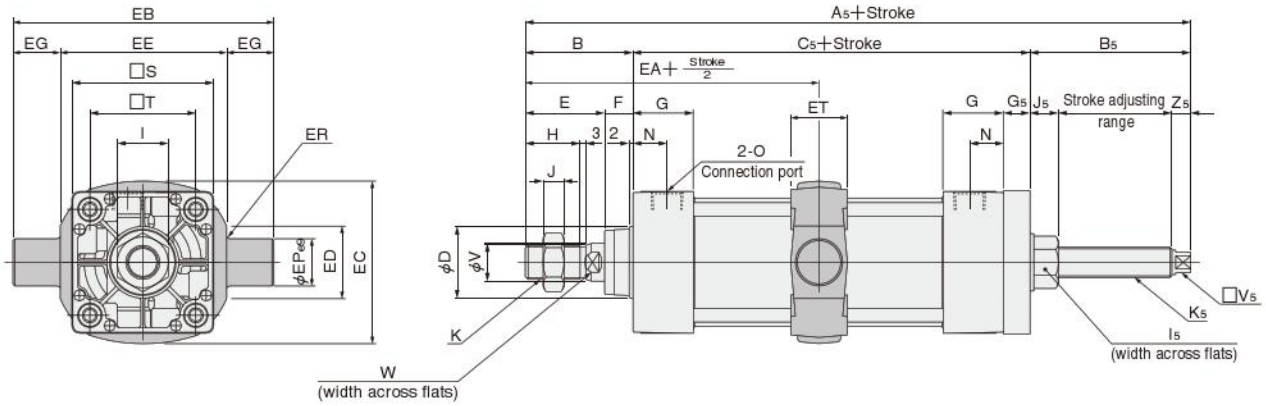

Bore mm [in.] \ Code	A5	B	B5	C5	D	E	F	G	G5	H	I	I5	J	J5	K	K5
40 [1.575]	238	49	82	107	32	34	15	31	14	21	22	19	8	12	M14×1.5	M12×1.25
50 [1.969]	249	57	85	107	38	42	15	31	14	29	27	24	11	15	M18×1.5	M16×1.5
63 [2.480]	252	57	85	110	38	42	15	32	14	29	27	24	11	15	M18×1.5	M16×1.5
80 [3.150]	296	75	91	130	44	54	21	36	22	37	32	30	13	19	M22×1.5	M20×1.5
100 [3.940]	296	75	91	130	50	54	21	36	22	37	36	30	14	19	M26×1.5	M20×1.5

Bore mm [in.] \ Code	N	O	S	T	V	V5	W	Z5	EA	EB	EC	ED	EE	EG	EP	ER	ET
40 [1.575]	18	Rc1/4	50	37	16	8	14	10	95.5	113	60	30	63	25	25	R1.6	30
50 [1.969]	18	Rc3/8	62	47	20	11	17	10	103.5	126	72	30	76	25	25	R1.6	30
63 [2.480]	18	Rc3/8	75	56	20	11	17	10	105	138	87	40	88	25	25	R1.6	30
80 [3.150]	20	Rc1/2	94	70	25	14	21	12	129	164	105	40	114	25	25	R1.6	35
100 [3.940]	20	Rc1/2	112	84	30	14	26	12	129	182	129	44	132	25	25	R2	40

●With Supporting Brackets DDAE Bore size × Stroke -11-11T

CAD Trunnion supporting bracket only
DDA Bore size -11T

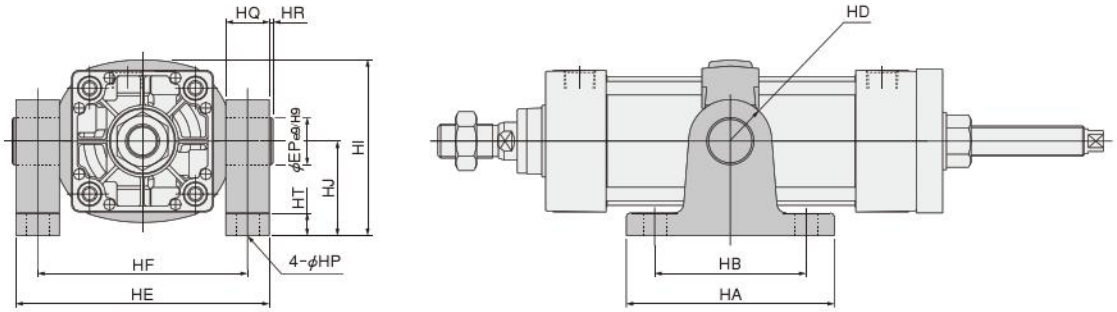

Bore mm [in.] \ Code	HA	HB	HD	HE	HF	HI	HJ	HP	HQ	HR	HT	EP
40 [1.575]	111	80	R22	109	86	80	50	12 (Thru hole)	23	2	14	25
50 [1.969]	111	80	R22	122	99	86	50	12 (Thru hole)	23	2	14	25
63 [2.480]	111	80	R22	134	111	93.5	50	12 (Thru hole)	23	2	14	25
80 [3.150]	121	85	R22	160	137	122.5	70	14 (Thru hole)	23	2	14	25
100 [3.940]	121	85	R22	178	155	134.5	70	14 (Thru hole)	23	2	14	25

DYNA LOW HYDRAULIC CYLINDERS

Symbol

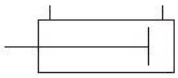

Specifications

Item / Bore size mm [in.]	32 [1.260]	40 [1.575]	50 [1.969]	63 [2.480]	80 [3.150]	100 [3.940]
Operation type	Double acting type					
Media	Turbine oil with defoaming agent (ISO VG22～100 or equivalent) or petroleum-based hydraulic oil					
Mounting type	Basic type, Foot type, Axial foot type, Rod side flange type, Head side flange type, Clevis type, Pivot type, Trunnion type					
Operating pressure range MPa [psi.]	0.2～1.0 [29～145]					
Proof pressure MPa [psi.]	1.5 [218]					
Operating temperature range °C [°F]	0～60 [32～140]					
Operating speed range mm/s [in./sec.]	1～150 [0.04～5.9]					
Cushion	None					
Port size Rc	1/8	1/4	3/8		1/2	

Notes: 1. For low hydraulic cylinders, use of oil on both sides is recommended. Use of air on one side and oil on the other side could lead to an inability to maintain accurate speed control, or to oil leaking into the air side. Moreover, use meter-out control for the speed control.
2. If mounting a reed switch type sensor switch, set the minimum speed to 30mm/s or more.
3. Nonflammable hydraulic oil, machine oil, or spindle oil cannot be used.
4. Be aware that a change in oil temperature can cause the speed to change.

Bore Size and Stroke

mm

Bore size	Standard strokes	Maximum avaiable stroke
32	50, 75, 100, 150, 200, 250, 300, 350, 400, 450, 500, 600, 700	700
40	50, 75, 100, 150, 200, 250, 300, 350, 400, 450, 500, 600, 700	1000
50	800	1500
63	50, 75, 100, 150, 200, 250, 300, 350, 400, 450, 500, 600, 700 800, 900, 1000	1500
80		
100		

Remarks: 1. Stroke tolerance;
Strokes of 250 or less: $^{+1}_{0}$ [$^{+0.039}_{0}$ in.]
Strokes of 251～1000: $^{+1.5}_{0}$ [$^{+0.059}_{0}$ in.]
Strokes of 1001 or more: $^{+2.0}_{0}$ [$^{+0.079}_{0}$ in.]
2. For non-standard strokes, consult us.
3. For the maximum available stroke with bellows specification, see p.538.

Order Codes

DDA [ ] [**50×100**] – [ ] – [ ] – [ ] – [ ] [ ] [ ]

Bore size × Stroke

Types of bellows
- **JT** — Nylon tarpaulin (～80°C [176°F])
- **JC** — Chloroprene (～100°C [212°F])
- **JK** — Conex (～200°C [392°F])
- **JA** — Alumix (～250°C [482°F])
- ●Conex is a registered trademark of Teijin, Inc.
- ●The temperatures shown are the bellows' own durable temperatures, and are not temperatures for cylinder use.

Cylinder specification
- **H** — Low hydraulic cylinder
- **HJ** — Low hydraulic cylinder with bellows

DYNA Cylinder Basic model

Mounting type
- **Blank** — Basic type
- **1** — Foot mounting type
- **2** — Axial foot mounting type
- **3** — Rod side flange mounting type
- **5** — Head side flange mounting type
- **7** — Clevis mounting type (with pin)
- **7-7C** — Clevis mounting type (with supporting bracket)
- **8** — Pivot mounting type
- **11** — Trunnion type
- **11-11T** — Trunnion type (with supporting brackets)
- ●Mounting brackets are already assembled at shipping.
- ●Orders for mounting brackets only are also accepted.

Sensor switch (For cylinder with magnet)

ZC130	2-lead wire	Solid state type	with indicator lamp	DC10～28V
ZC153	3-lead wire	Solid state type	with indicator lamp	DC4.5～28V
CS5T	2-lead wire	Reed switch type	without indicator lamp	DC5～28V AC85～115V
CS11T	2-lead wire	Reed switch type	with indicator lamp	DC10～28V
CS2F	DIN type	Reed switch type	with indicator lamp	AC85～230V
CS3F	DIN type	Reed switch type	with indicator lamp	DC10～30V
CS4F	DIN type	Reed switch type	with indicator lamp	DC10～30V
CS5F	DIN type	Reed switch type	without indicator lamp	DC3～30V

- ●For mounting location of sensor switch, see p.534
- ●**CS□F** comes with a DIN connector. All others are grommet type.
- ●Orders for sensor switches only are also accepted.

Rod end accessory
- **Blank** — No rod end accessory
- **Y** — With Y type knuckle (with pin)
- **I** — With I type knuckle
- ●For the cylinder joint and cylinder rod end, see p.1568.
- ●Orders for rod end accessories only are also accepted.
- ●For dimensions rod end accessories, see p.537.

Lead wire length
(Applicable only to **ZC,CS□T** types)
- **A** : 1000mm [39in.]
- **B** : 3000mm [118in.]

Number of sensor switches
- **1** — With 1 sensor switch
- **2** — With 2 sensor switches
- ⋮ ⋮
- **n** — With n sensor switches

Inner Construction and Major Parts

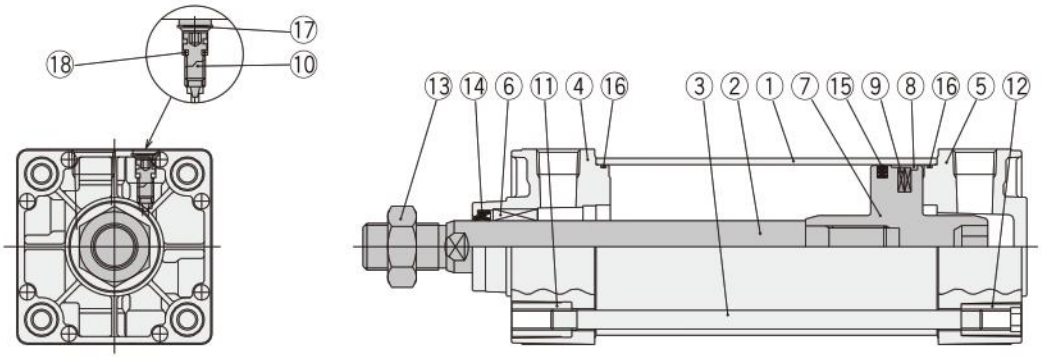

Major Parts and Materials

No.	Parts	Materials
①	Cylinder tube	Aluminum alloy
②	Piston rod	Carbon steel for machine structural use
③	Tie rod	Carbon steel for machine structural use
④	Rod cover	Aluminum die-casting
⑤	Head cover	Aluminum die-casting
⑥	Rod bushing	Oil impregnated sintered copper alloy
⑦	Piston	Aluminum alloy
⑧	Wear ring	Plastic
⑨	Magnet	Rubber magnet

No.	Parts	Materials
⑩	Plug	Carbon steel for machine structural use
⑪	Tie rod nut R	Rolled steel for general structural use
⑫	Tie rod nut H	Chrome-molybdenum steel
⑬	Rod end nut	Rolled steel for general structural use
⑭	Rod seal	Synthetic rubber (NBR)
⑮	Piston seal	Synthetic rubber (NBR)
⑯	Tube gasket	Synthetic rubber (NBR)
⑰	Snap ring	Spring steel
⑱	Plug gasket	Synthetic rubber (NBR)

Seals

Parts / Bore size mm \ Quantity	Rod seal	Piston seal	Tube gasket	Plug gasket
	1★	1★	2★	2
32	NHU-12	OSD-32A	1.5×32	S5
40	NHU-16	OSD-40A	1.5×40	S5
50	NHU-20	OSD-50A	1.5×50	S6
63	NHU-20	OSD-63A	1.5×63	S6
80	NHU-25	OSD-80A	1.5×80	S6
100	NHU-30	OSD-100A	1.5×100	S6

Remark: Items marked with a star (★) are available as repair kits.
Order codes: For low hydraulic cylinders··· SRK-NDDAH Bore size

Mass

kg [lb.]

Bore size mm [in.]	Zero stroke mass										Additional mass for each 1mm [0.0394in.] stroke	Mass of 1 sensor switch [with holder]		Mass of knuckle	
	Basic type	Foot mounting type	Axial foot mounting type	Flange mounting type	Clevis mtg. type (with pin)	Clevis mtg. type (w. supporting bkt.)	Pivot mounting type	Trunnion type	Trunnion type (w. supporting bkt.)			ZC□□□ CS□□ Note	CS□F	Y type knuckle (with pin)	I type knuckle
32 [1.260]	0.57 [1.26]	0.68 [1.50]	0.71 [1.57]	0.77 [1.70]	0.76 [1.68]	1.22 [2.69]	0.69 [1.52]	0.87 [1.92]	1.09 [2.40]	0.00218 [0.00481]	0.04 [0.09]		0.05 [0.11]	0.22 [0.49]	0.16 [0.35]
40 [1.575]	0.65 [1.43]	0.78 [1.72]	0.85 [1.87]	1.02 [2.25]	0.92 [2.03]	1.62 [3.57]	0.83 [1.83]	1.13 [2.49]	1.63 [3.59]	0.00300 [0.00661]				0.27 [0.60]	0.16 [0.35]
50 [1.969]	1.02 [2.25]	1.19 [2.62]	1.34 [2.95]	1.41 [3.11]	1.41 [3.11]	2.11 [4.65]	1.28 [2.82]	1.57 [3.46]	2.07 [4.56]	0.00428 [0.00944]				0.34 [0.75]	0.21 [0.46]
63 [2.480]	1.36 [3.00]	1.59 [3.51]	1.88 [4.15]	1.89 [4.17]	1.84 [4.06]	3.54 [7.81]	1.78 [3.92]	2.06 [4.54]	2.56 [5.64]	0.00515 [0.01136]	0.04 [0.09]		0.06 [0.13]	0.34 [0.75]	0.21 [0.46]
80 [3.150]	2.32 [5.12]	2.70 [5.95]	3.17 [6.99]	3.92 [8.64]	3.24 [7.14]	3.96 [8.73]	3.40 [7.50]	3.48 [7.67]	4.20 [9.26]	0.00834 [0.01839]				0.87 [1.92]	0.62 [1.37]
100 [3.940]	2.94 [6.48]	3.41 [7.52]	4.22 [9.31]	5.16 [11.38]	4.18 [9.22]	4.90 [10.80]	4.33 [9.55]	4.47 [9.86]	5.19 [11.44]	0.01061 [0.02340]				1.47 [3.24]	1.24 [2.73]

Note: For lead wire length A (1000mm [39in.]).

Calculation example: For foot mounting type with bore size of 50mm, and stroke of 100mm,
1.19+(0.00428×100)=1.618kg [3.568lb.]

Dimensions of Basic Type (mm)

DDAH 32× Stroke

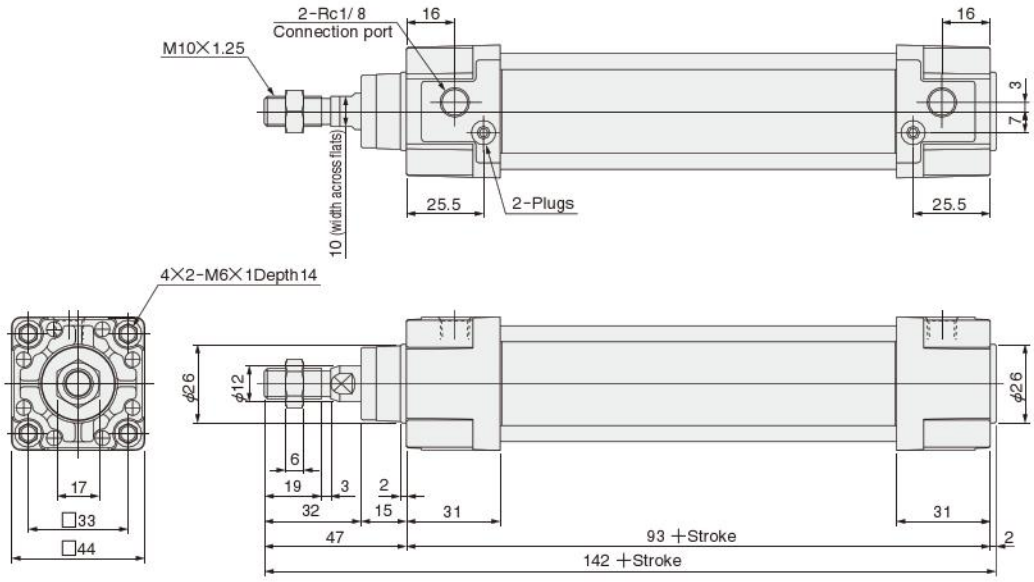

DDAH Bore size × Stroke

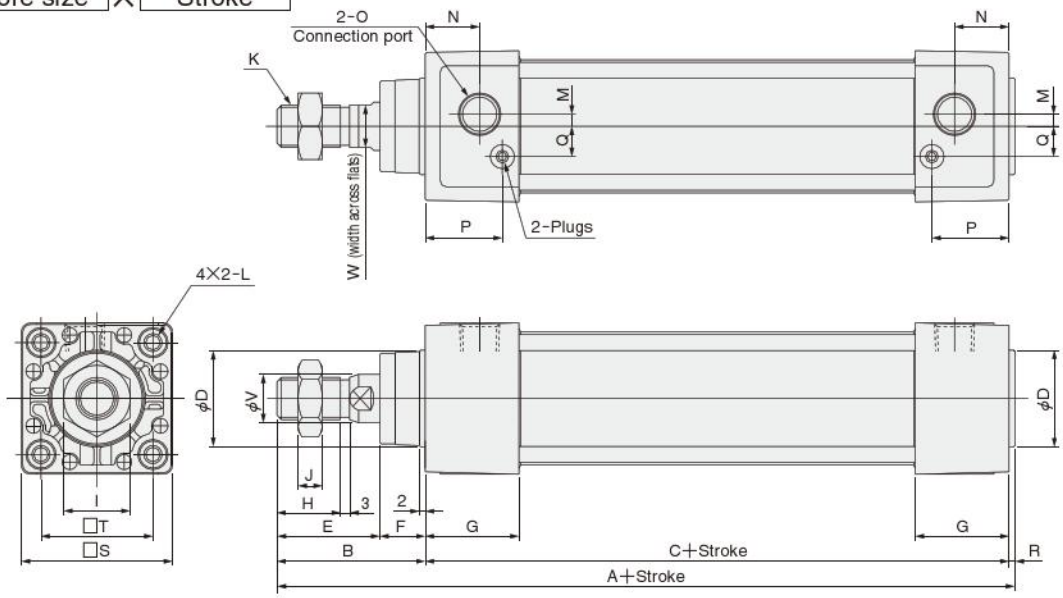

Bore mm [in.] / Code	A	B	C	D	E	F	G	H	I	J	K	L	
40 [1.575]	144	49	93	32	34	15	31	21	22	8	M14×1.5	M 6×1	Depth 14
50 [1.969]	152	57	93	38	42	15	31	29	27	11	M18×1.5	M 6×1	Depth 14
63 [2.480]	155	57	96	38	42	15	32	29	27	11	M18×1.5	M 8×1.25	Depth 14
80 [3.150]	185	75	108	44	54	21	36	37	32	13	M22×1.5	M10×1.5	Depth 15
100 [3.940]	185	75	108	50	54	21	36	37	36	14	M26×1.5	M10×1.5	Depth 15

Bore mm [in.] / Code	M	N	O	P	Q	R	S	T	V	W	Y
40 [1.575]	4	18	Rc1/4	25.5	10	2	50	37	16	14	2.5
50 [1.969]	7	18	Rc3/8	24	12	2	62	47	20	17	3
63 [2.480]	8	18	Rc3/8	25	12	2	75	56	20	17	3
80 [3.150]	11	20	Rc1/2	29	16	2	94	70	25	21	3
100 [3.940]	12	20	Rc1/2	29	18	2	112	84	30	26	3

Dimensions of Foot Mounting Type (mm)

DDAH Bore size × Stroke **-1**

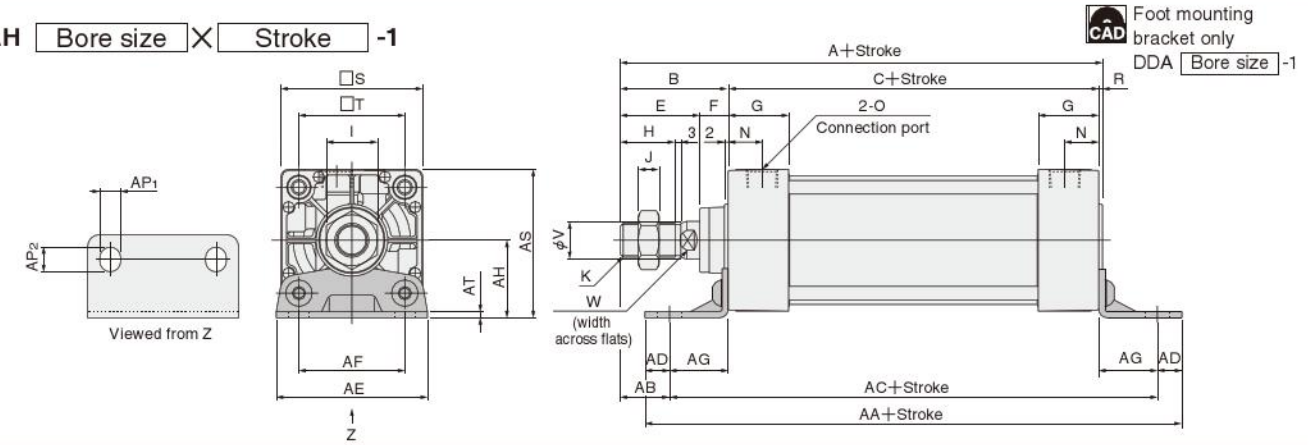

Bore mm [in.] / Code	A	B	C	E	F	G	H	I	J	K	N	O	R	S	T	V	W
32 [1.260]	142	47	93	32	15	31	19	17	6	M10×1.25	16	Rc1/8	2	44	33	12	10
40 [1.575]	144	49	93	34	15	31	21	22	8	M14×1.5	18	Rc1/4	2	50	37	16	14
50 [1.969]	152	57	93	42	15	31	29	27	11	M18×1.5	18	Rc3/8	2	62	47	20	17
63 [2.480]	155	57	96	42	15	32	29	27	11	M18×1.5	18	Rc3/8	2	75	56	20	17
80 [3.150]	185	75	108	54	21	36	37	32	13	M22×1.5	20	Rc1/2	2	94	70	25	21
100 [3.940]	185	75	108	54	21	36	37	36	14	M26×1.5	20	Rc1/2	2	112	84	30	26

Bore mm [in.] / Code	AA	AB	AC	AD	AE	AF	AG	AH	AP_1	AP_2	AS	AT
32 [1.260]	153	26.5	134	9.5	50	33	20.5	28	9	11	50	3.2
40 [1.575]	165	25.5	140	12.5	57	36	23.5	30	11	13	55	3.2
50 [1.969]	173	29	149	12	68	47	28	36.5	11	13	67.5	3.2
63 [2.480]	184	26	158	13	80	56	31	41	11	13	78.5	3.2
80 [3.150]	200	45	168	16	97	70	30	49	14	16	96	4
100 [3.940]	200	45	168	16	112	84	30	57	14	16	113	4

Dimensions of Axial Foot Mounting Type (mm)

DDAH Bore size × Stroke **-2**

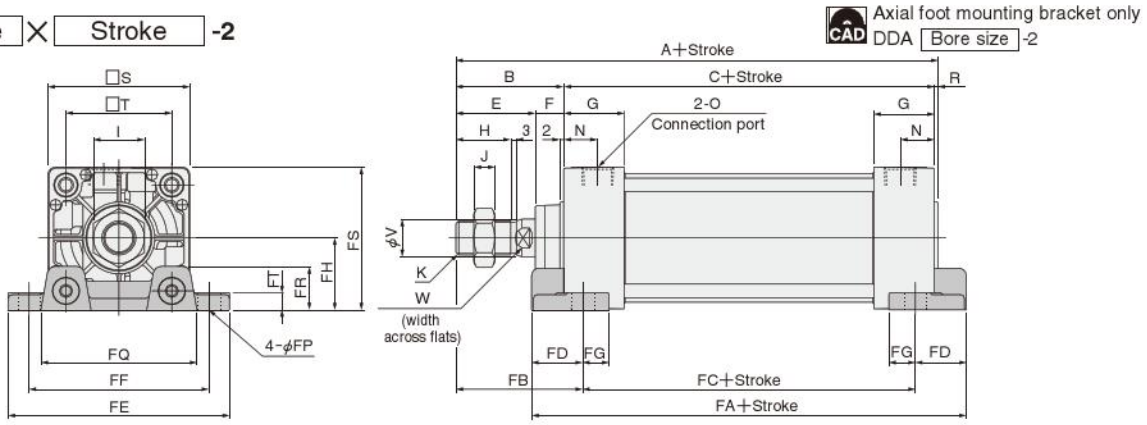

Bore mm [in.] / Code	A	B	C	E	F	G	H	I	J	K	N	O	R	S	T	V	W
32 [1.260]	142	47	93	32	15	31	19	17	6	M10×1.25	16	Rc1/8	2	44	33	12	10
40 [1.575]	144	49	93	34	15	31	21	22	8	M14×1.5	18	Rc1/4	2	50	37	16	14
50 [1.969]	152	57	93	42	15	31	29	27	11	M18×1.5	18	Rc3/8	2	62	47	20	17
63 [2.480]	155	57	96	42	15	32	29	27	11	M18×1.5	18	Rc3/8	2	75	56	20	17
80 [3.150]	185	75	108	54	21	36	37	32	13	M22×1.5	20	Rc1/2	2	94	70	25	21
100 [3.940]	185	75	108	54	21	36	37	36	14	M26×1.5	20	Rc1/2	2	112	84	30	26

Bore mm [in.] / Code	FA	FB	FC	FD	FE	FF	FG	FH	FP	FQ	FR	FS	FT
32 [1.260]	119	57	73	23	81	63	14	22	9	54	14	44	8
40 [1.575]	119	59	73	23	92	70	14	25	12	58	16	50	8
50 [1.969]	123	67	73	25	105	83	14	31	12	68	17	62	9
63 [2.480]	130	67	76	27	117	95	14	38	12	84	22	75.5	9
80 [3.150]	150	88	82	34	147	121	18	47	14	104	28	94	13
100 [3.940]	158	88	82	38	168	140	18	57	14	120	30	113	14

Dimensions of Rod Side Flange Mounting Type (mm)

DDAH Bore size × Stroke **-3**

CAD Flange mounting bracket only DDA Bore size -3

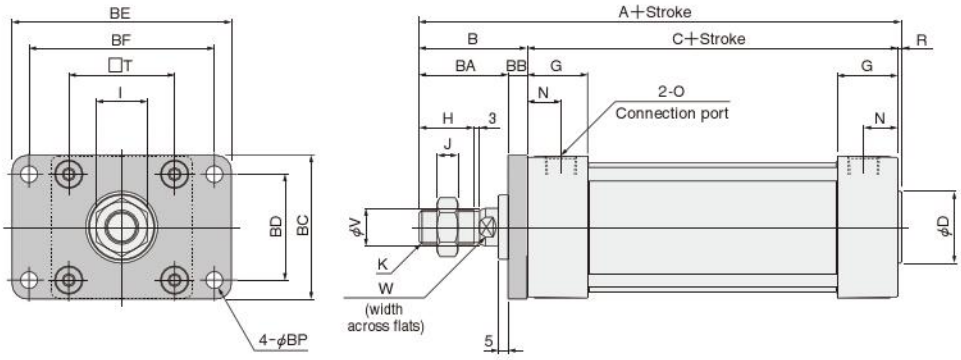

Bore mm[in.] \ Code	A	B	C	D	G	H	I	J	K	N	O	R	T	V	W
32 [1.260]	142	47	93	26	31	19	17	6	M10×1.25	16	Rc1/8	2	33	12	10
40 [1.575]	144	49	93	32	31	21	22	8	M14×1.5	18	Rc1/4	2	37	16	14
50 [1.969]	152	57	93	38	31	29	27	11	M18×1.5	18	Rc3/8	2	47	20	17
63 [2.480]	155	57	96	38	32	29	27	11	M18×1.5	18	Rc3/8	2	56	20	17
80 [3.150]	185	75	108	44	36	37	32	13	M22×1.5	20	Rc1/2	2	70	25	21
100 [3.940]	185	75	108	50	36	37	36	14	M26×1.5	20	Rc1/2	2	84	30	26

Bore mm[in.] \ Code	BA	BB	BC	BD	BE	BF	BP
32 [1.260]	37	10	47	33	72	58	7
40 [1.575]	39	10	52	36	84	70	7
50 [1.969]	47	10	65	47	104	86	9
63 [2.480]	47	10	76	56	116	98	9
80 [3.150]	59	16	95	70	143	119	12
100 [3.940]	59	16	115	84	162	138	12

Dimensions of Head Side Flange Mounting Type (mm)

DDAH Bore size × Stroke **-5**

CAD Flange mounting bracket only DDA Bore size -3

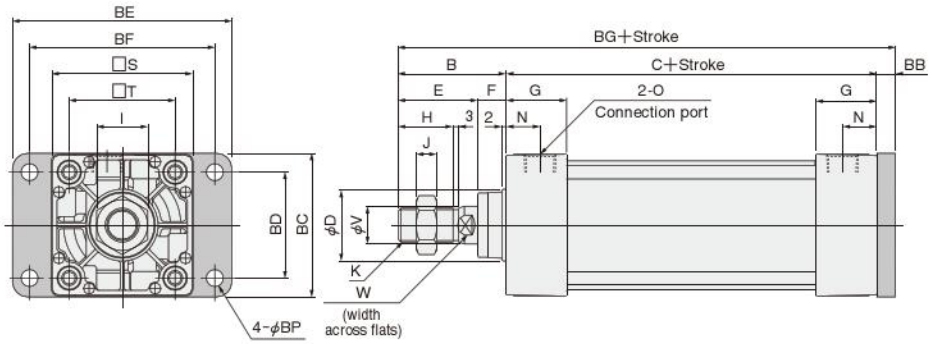

Bore mm[in.] \ Code	B	C	D	E	F	G	H	I	J	K	N	O	S	T	V	W
32 [1.260]	47	93	26	32	15	31	19	17	6	M10×1.25	16	Rc1/8	44	33	12	10
40 [1.575]	49	93	32	34	15	31	21	22	8	M14×1.5	18	Rc1/4	50	37	16	14
50 [1.969]	57	93	38	42	15	31	29	27	11	M18×1.5	18	Rc3/8	62	47	20	17
63 [2.480]	57	96	38	42	15	32	29	27	11	M18×1.5	18	Rc3/8	75	56	20	17
80 [3.150]	75	108	44	54	21	36	37	32	13	M22×1.5	20	Rc1/2	94	70	25	21
100 [3.940]	75	108	50	54	21	36	37	36	14	M26×1.5	20	Rc1/2	112	84	30	26

Bore mm[in.] \ Code	BB	BC	BD	BE	BF	BG	BP
32 [1.260]	10	47	33	72	58	150	7
40 [1.575]	10	52	36	84	70	152	7
50 [1.969]	10	65	47	104	86	160	9
63 [2.480]	10	76	56	116	98	163	9
80 [3.150]	16	95	70	143	119	199	12
100 [3.940]	16	115	84	162	138	199	12

Dimensions of Clevis Mounting Type (mm)

DDAH Bore size × Stroke **-7**

CAD Clevis mounting bracket only DDA Bore size -7

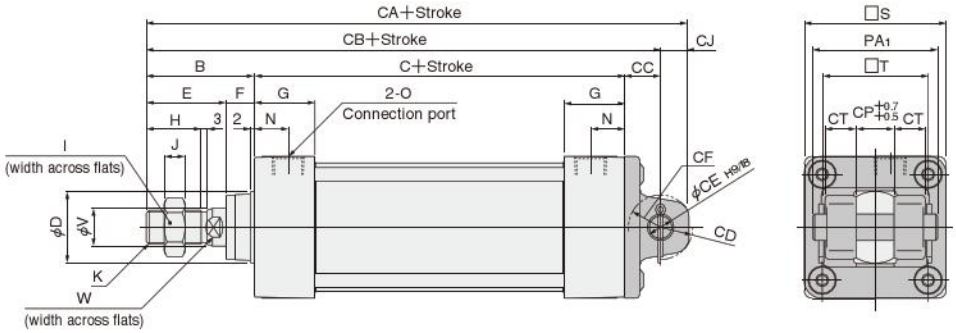

Bore mm [in.] \ Code	B	C	D	E	F	G	H	I	J	K	N	O	S	T	V	W
32 [1.260]	47	93	26	32	15	31	19	17	6	M10×1.25	16	Rc1/8	44	33	12	10
40 [1.575]	49	93	32	34	15	31	21	22	8	M14×1.5	18	Rc1/4	50	37	16	14
50 [1.969]	57	93	38	42	15	31	29	27	11	M18×1.5	18	Rc3/8	62	47	20	17
63 [2.480]	57	96	38	42	15	32	29	27	11	M18×1.5	18	Rc3/8	75	56	20	17
80 [3.150]	75	108	44	54	21	36	37	32	13	M22×1.5	20	Rc1/2	94	70	25	21
100 [3.940]	75	108	50	54	21	36	37	36	14	M26×1.5	20	Rc1/2	112	84	30	26

Bore mm [in.] \ Code	CA	CB	CC	CD	CE	CF	CJ	CP	CT	PA1
32 [1.260]	172	159	19	R15	12	R17	13	16	8.5	46
40 [1.575]	174	161	19	R15	14	R17	13	20	12.5	58
50 [1.969]	184	169	19	R17	14	R17	15	20	16.5	66
63 [2.480]	187	172	19	R17	14	R17	15	20	16.5	66
80 [3.150]	236	215	32	R24	20	R30	21	32	17.5	78
100 [3.940]	236	215	32	R24	20	R30	21	32	17.5	78

●With Supporting Bracket DDAH Bore size × Stroke -7-7C

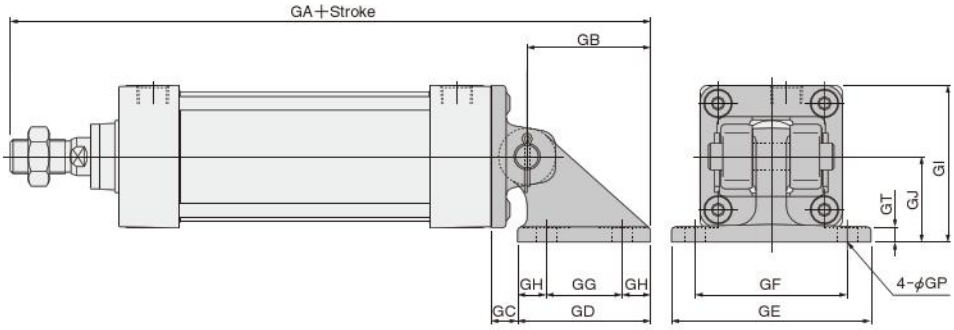

Bore mm [in.] \ Code	GA	GB	GC	GD	GE	GF	GG	GH	GI	GJ	GP	GT
32 [1.260]	215.5	56.5	12.5	63	85	65	40	11.5	57	35	9(Thru hole)	8
40 [1.575]	227.5	66.5	12.5	73	105	80	40	16.5	70	45	11(Thru hole)	8
50 [1.969]	235.5	66.5	12.5	73	105	80	40	16.5	76	45	11(Thru hole)	8
63 [2.480]	238.5	66.5	12.5	73	105	80	40	16.5	82.5	45	11(Thru hole)	8
80 [3.150]	301.5	86.5	20.5	98	135	105	65	16.5	107	60	14(Thru hole)	12
100 [3.940]	301.5	86.5	20.5	98	135	105	65	16.5	116	60	14(Thru hole)	12

Dimensions of Pivot Mounting Type (mm)

DDAH Bore size × Stroke **-8**

CAD Pivot mounting bracket only
DDA Bore size -8

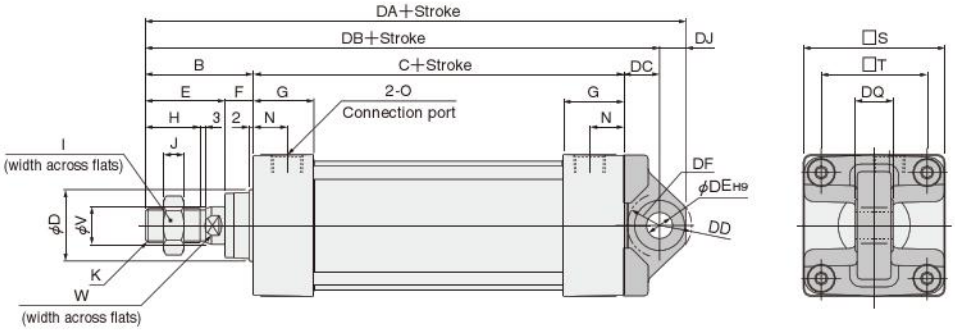

Bore mm[in] \ Code	B	C	D	E	F	G	H	I	J	K	N	O	S	T	V	W
32 [1.260]	47	93	26	32	15	31	19	17	6	M10×1.25	16	Rc1/8	44	33	12	10
40 [1.575]	49	93	32	34	15	31	21	22	8	M14×1.5	18	Rc1/4	50	37	16	14
50 [1.969]	57	93	38	42	15	31	29	27	11	M18×1.5	18	Rc3/8	62	47	20	17
63 [2.480]	57	96	38	42	15	32	29	27	11	M18×1.5	18	Rc3/8	75	56	20	17
80 [3.150]	75	108	44	54	21	36	37	32	13	M22×1.5	20	Rc1/2	94	70	25	21
100 [3.940]	75	108	50	54	21	36	37	36	14	M26×1.5	20	Rc1/2	112	84	30	26

Bore mm[in] \ Code	DA	DB	DC	DD	DE	DF	DJ	DQ
32 [1.260]	172	159	19	R16	12	R16	13	$16^{0}_{-0.070}$
40 [1.575]	175	161	19	R17	14	R17	14	$20^{0}_{-0.084}$
50 [1.969]	183	169	19	R17	14	R17	14	$20^{0}_{-0.084}$
63 [2.480]	186	172	19	R17	14	R17	14	$20^{0}_{-0.084}$
80 [3.150]	236	215	32	R24	20	R25	21	$32^{0}_{-0.100}$
100 [3.940]	235	215	32	R24	20	R26	20	$32^{0}_{-0.100}$

Dimensions of Trunnion Type (mm)

DDAH Bore size × Stroke **-11**

CAD Trunnion bracket only
DDA Bore size -11

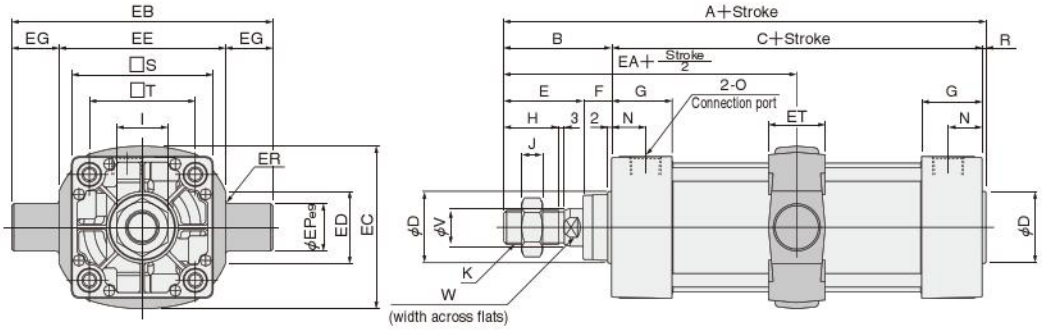

Bore mm [in.] \ Code	A	B	C	D	E	F	G	H	I	J	K	N	O	R	S	T	V	W
32 [1.260]	142	47	93	26	32	15	31	19	17	6	M10×1.25	16	Rc1/8	2	44	33	12	10
40 [1.575]	144	49	93	32	34	15	31	21	22	8	M14×1.5	18	Rc1/4	2	50	37	16	14
50 [1.969]	152	57	93	38	42	15	31	29	27	11	M18×1.5	18	Rc3/8	2	62	47	20	17
63 [2.480]	155	57	96	38	42	15	32	29	27	11	M18×1.5	18	Rc3/8	2	75	56	20	17
80 [3.150]	185	75	108	44	54	21	36	37	32	13	M22×1.5	20	Rc1/2	2	94	70	25	21
100 [3.940]	185	75	108	50	54	21	36	37	36	14	M26×1.5	20	Rc1/2	2	112	84	30	26

Bore mm [in.] \ Code	EA	EB	EC	ED	EE	EG	EP	ER	ET
32 [1.260]	93.5	87	53	20	55	16	16	R1	30
40 [1.575]	95.5	113	60	30	63	25	25	R1.6	30
50 [1.969]	103.5	126	72	30	76	25	25	R1.6	30
63 [2.480]	105	138	87	40	88	25	25	R1.6	30
80 [3.150]	129	164	105	40	114	25	25	R1.6	35
100 [3.940]	129	182	129	44	132	25	25	R2	40

●With Supporting Brackets DDAH Bore size × Stroke -11-11T

CAD Trunnion supporting bracket only
DDA Bore size -11T

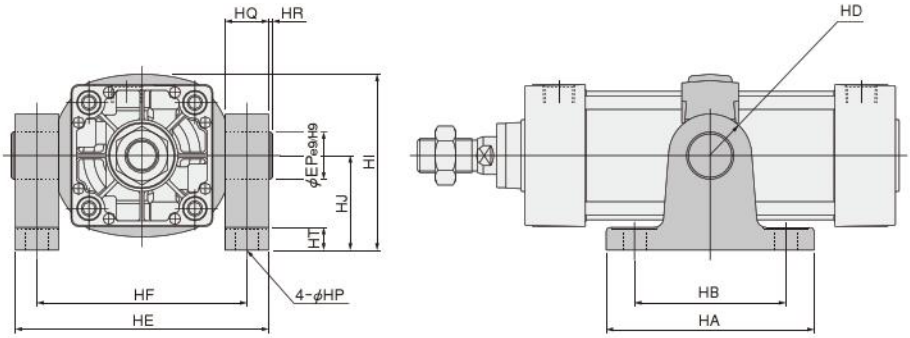

Bore mm [in.] \ Code	HA	HB	HD	HE	HF	HI	HJ	HP	HQ	HR	HT	EP
32 [1.260]	81	60	R16	85	70	66.5	40	9(Thru hole)	15	1	12	16
40 [1.575]	111	80	R22	109	86	80	50	12(Thru hole)	23	2	14	25
50 [1.969]	111	80	R22	122	99	86	50	12(Thru hole)	23	2	14	25
63 [2.480]	111	80	R22	134	111	93.5	50	12(Thru hole)	23	2	14	25
80 [3.150]	121	85	R22	160	137	122.5	70	14(Thru hole)	23	2	14	25
100 [3.940]	121	85	R22	178	155	134.5	70	14(Thru hole)	23	2	14	25

DYNA VALPACK CYLINDERS

Symbol

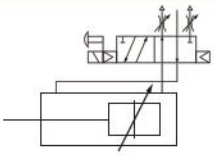

Specifications

Item / Bore size mm [in.]	40 [1.575]	50 [1.969]	63 [2.480]	80 [3.150]	100 [3.940]
Operation type	Double acting type				
Media	Air				
Mounting type	Basic type, Foot type, Axial foot type, Rod side flange type, Head side flange type, Clevis type, Pivot type, Trunnion type				
Operating pressure range MPa [psi.]	0.17～0.7 [25～102]				
Proof pressure MPa [psi.]	1.05 [152]				
Operating temperature range °C [°F]	5～50 [41～122]				
Operating speed range mm/s [in./sec.]	50～500 [2.0～19.7]				50～300 [2.0～11.8]
Speed controller	Exhaust throttle valve (2-way) is standard equipment				
Cushion stroke mm [in.]	16 [0.630]	20 [0.787]		25 [0.984]	
Lubrication	Not required (If lubrication is required, use Turbine Oil Class 1 (ISO VG32) or equivalent.)				
Port size Rc	3/8				

Bore Size and Stroke

mm

Bore size	Standard strokes	Maximum available stroke
40	50Note, 75, 100, 150, 200, 250, 300, 350, 400, 450, 500, 600, 700, 800	1000
50	50Note, 75, 100, 150, 200, 250, 300, 350, 400, 450, 500, 600, 700, 800, 900, 1000	1500
63		
80		
100		

Remarks: 1. Stroke tolerance: Strokes of 250 or less: $^{+1}_{0}$ [$^{+0.039}_{0}$in.], strokes of 251～1000: $^{+1.5}_{0}$ [$^{+0.059}_{0}$in.], and strokes of 1001 or more: $^{+2.0}_{0}$ [$^{+0.079}_{0}$in.].
2. For non-standard strokes, consult us.
3. Cylinders with magnets are not available for steel tube specification.
4. For the maximum available stroke with bellows specification, see p.538.

Note: Not available for trunnion type.

Solenoid Valve Specifications

Item / Series	350 series
Solenoid specification	Single solenoid
Model	VP350-4E1-70
Operation type	Indirect operation
Number of positions and ports	2 positions, 5 ports
Effective area [Cv] mm²	26.5 [1.47]
Port size Rc	1/4
Lubrication	Not required
Operating pressure range MPa [psi.]	0.17～0.7 [25～102]
Proof pressure MPa [psi.]	1.1 [160]
Operating temperature range °C [°F]	5～50 [41～122]
Shock resistance G	90
Mounting direction	Any
Maximum operating frequency cycle/s	5

Solenoid Specifications

Item / Rated voltage		AC100V		AC200V		DC24V
Type		Shading type				Flywheel diode incorporated for surge suppression
Operating voltage range V		90～132 (100$^{+32}_{-10}$%)		180～264 (200$^{+32}_{-10}$%)		21.6～26.4 (24±10%)
Current (When rated voltage applied)	Frequency Hz	50	60	50	60	—
	Starting mA(r.m.s.)	34	32	17	16	—
	Energizing mA(r.m.s.)	22	20	11	10	65(1.6W)
Maximum allowable leakage current mA		4		2		4
Insulation type		B type				
Insulation resistance MΩ		Min. 100				
Wiring and lead wire length		Grommet type: 300mm [11.8in.]				
Color of lead wire		Yellow		White		Red(+),Black(−)
Surge suppression		Built-in varistor (made to order)				Flywheel diode (standard equipment)

Order Codes

DDV □ **50×100** – □ – □ – □ – □ – **AC100V** – □ □ □

Bore size × Stroke

Bellows
Blank — No bellows
J — With bellows

Types of bellows
JT — Nylon tarpaulin (～80°C [176°F])
JC — Chloroprene (～100°C [212°F])
JK — Conex (～200°C [392°F])
JA — Alumix (～250°C [482°F])
●Conex is a registered trademark of Teijin, Inc.
●The temperatures shown are the bellows' own durable temperatures, and are not temperatures for cylinder use.

Tube material
Blank — Standard
FT — Steel tube specification (Not available for cylinder with magnet.)

DYNA Valpack cylinder

Mounting type
Blank — Basic type
1 — Foot mounting type
2 — Axial foot mounting type
3 — Rod side flange mounting type
5 — Head side flange mounting type
7 — Clevis mounting type (with pin)
7-7C — Clevis mounting type (with supporting bracket)
8 — Pivot mounting type
11 — Trunnion type
11-11T — Trunnion type (with supporting brackets)
●Mounting brackets are already assembled at shipping.
●Orders for mounting brackets only are also accepted.

Voltage
AC100V
AC200V
DC24V
●Single unit valve order code **VP350-4E1-70-Voltage**
●2 pcs. standard speed controllers are included.

Rod end accessory
Blank — No rod end accessory
Y — With Y type knuckle (with pin)
I — With I type knuckle
●For the cylinder joint and cylinder rod end, see p.1568.
●Orders for rod end accessories only are also accepted.
●For dimensions of rod end accessories, see p.537.

Sensor switch (For cylinder with magnet)

ZC130	2-lead wire	Solid state type	with indicator lamp	DC10～28V
ZC153	3-lead wire	Solid state type	with indicator lamp	DC4.5～28V
CS5T	2-lead wire	Reed switch type	without indicator lamp	DC5～28V AC85～115V
CS11T	2-lead wire	Reed switch type	with indicator lamp	DC10～28V
CS2F	DIN type	Reed switch type	with indicator lamp	AC85～230V
CS3F	DIN type	Reed switch type	with indicator lamp	DC10～30V
CS4F	DIN type	Reed switch type	with indicator lamp	DC10～30V
CS5F	DIN type	Reed switch type	without indicator lamp	DC3～30V

●For mounting location of sensor switch, see p.534.
●CS□F comes with a DIN connector. All others are grommet type.
●Orders for sensor switches only are also accepted.

Lead wire length
A — 1000mm [39in.]
B — 3000mm [118in.]

Number of sensor switches
1 — With 1 sensor switch
2 — With 2 sensor switches
⋮
n — With n sensor switches

Remarks: 1. The order code of the valpack valve only is **VP350-4E1-70-Voltage**.
2. For made to order valves, or for double solenoid, 3-position, locking type manual override, plug connector, DIN connector, or LED indicator, consult us.

Inner Construction and Major Parts

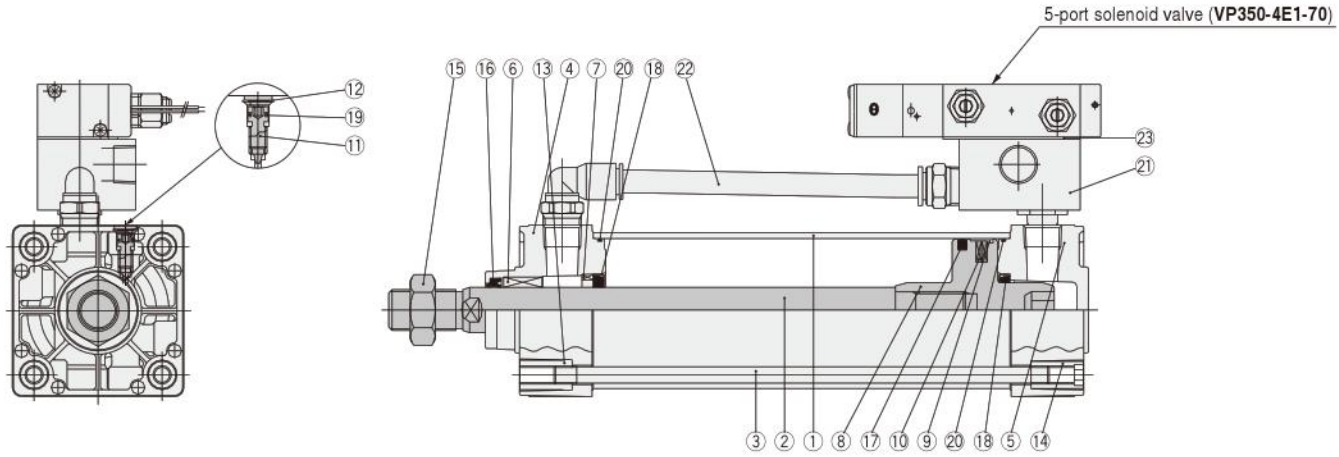

Seals

Parts / Bore size mm \ Quantity	Rod seal	Piston seal	Cushion seal	Tube gasket	Cushion gasket
	1★	1★	2	2★	2
40	DRP16	PWP40N	CPF20	1.5×40	S5
50	DRP20	PWP50N	CPF24	1.5×50	S6
63	DRP20	PWP63N	CPF24	1.5×63	S6
80	DRP25	PWP80N	CPF30	1.5×80	S6
100	DRP30	PWP100N	CPF35	1.5×100	S6

Remark: Items marked with a star (★) are available as repair kits.
Order code: For valpack cylinders··· SRK-NDDV Bore size

Switching from Push to Pull Type Cylinder When Energizing

Push type cylinder when energizing **Pull type cylinder when energizing**

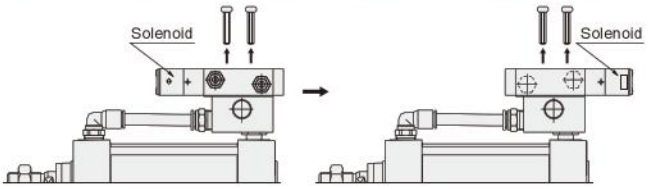

Remove the valve mounting screws, turn the valve 180°, and re-assemble. At this time, confirm that the valve adapter gasket is in the designated position between the valve and the valve adapter.

Major Parts and Materials

No.	Parts	Materials
①	Cylinder tube	Aluminum alloy, and steel tube specification is steel
②	Piston rod	φ32:Stainless steel, φ40~φ125:Carbon steel for machine structural use
③	Tie rod	Carbon steel for machine structural use
④	Rod cover	Aluminum die-casting
⑤	Head cover	Aluminum die-casting
⑥	Rod bushing	Oil impregnated sintered copper alloy
⑦	Keep ring	Aluminum alloy
⑧	Piston	Aluminum alloy
⑨	Wear ring	Plastic
⑩	Magnet	Rubber magnet
⑪	Cushion needle	Carbon steel for machine structural use
⑫	Snap ring	Spring steel
⑬	Tie rod nut R	Rolled steel for general structural use
⑭	Tie rod nut H	Chrome-molybdenum steel
⑮	Rod end nut	Rolled steel for general structural use
⑯	Rod seal	Synthetic rubber (NBR)

No.	Parts	Materials
⑰	Piston seal	Synthetic rubber (NBR)
⑱	Cushion seal	Synthetic rubber (NBR)
⑲	Cushion gasket	Synthetic rubber (NBR)
⑳	Tube gasket	Synthetic rubber (NBR)
㉑	Valve adapter	Aluminum alloy
㉒	Bypass tube	Nylon tube
㉓	Valve adapter gasket	Synthetic rubber (NBR)
—	Foot mounting bracket	Rolled steel for general structural use
—	Axial foot mounting bracket	Cast iron
—	Flange mounting bracket	Rolled steel for general structural use
—	Clevis mounting bracket	Cast iron
—	Clevis supporting bracket	Cast iron
—	Pivot mounting bracket	Cast iron
—	Trunnion bracket	Cast iron
—	Trunnion supporting bracket	Cast iron
—	Knuckles	Cast iron

Mass

kg [lb.]

Bore size mm [in.]	Zero stroke mass: Basic type	Foot mounting type	Axial foot mounting type	Flange mounting type	Clevis mtg. type (with pin)	Clevis mtg. type (w. supporting bkt.)	Pivot mounting type	Trunnion type	Trunnion type (w. supporting bkt.)	Additional mass for each 1mm [0.0394in.] stroke	Mass of 1 sensor switch [with holder]: ZC□□□ CS□□ Note	CS□F	Mass of knuckle: Y type knuckle (with pin)	I type knuckle
40 [1.575]	0.89 [1.96] (0.93 [2.05])	1.02 [2.25] (1.06 [2.34])	1.09 [2.40] (1.13 [2.49])	1.26 [2.78] (1.30 [2.87])	1.16 [2.56] (1.20 [2.65])	1.86 [4.10] (1.90 [4.19])	1.07 [2.36] (1.11 [2.45])	1.37 [3.02] (1.41 [3.11])	1.87 [4.12] (1.91 [4.21])	0.00300 [0.00662] (0.00730 [0.01610])	0.04 [0.09]	0.05 [0.11]	0.27 [0.60]	0.16 [0.35]
50 [1.969]	1.26 [2.78] (1.32 [2.91])	1.43 [3.15] (1.49 [3.29])	1.58 [3.48] (1.64 [3.62])	1.65 [3.64] (1.71 [3.77])	1.65 [3.64] (1.71 [3.77])	2.35 [5.18] (2.41 [5.31])	1.52 [3.35] (1.58 [3.48])	1.81 [3.99] (1.87 [4.12])	2.31 [5.09] (2.37 [5.23])	0.00428 [0.00944] (0.01068 [0.02355])			0.34 [0.75]	0.21 [0.46]
63 [2.480]	1.61 [3.55] (1.69 [3.73])	1.84 [4.06] (1.92 [4.23])	2.13 [4.70] (2.21 [4.87])	2.14 [4.72] (2.22 [4.90])	2.09 [4.61] (2.17 [4.78])	2.79 [6.15] (2.87 [6.33])	2.03 [4.48] (2.11 [4.65])	2.31 [5.09] (2.39 [5.27])	2.81 [6.20] (2.89 [6.37])	0.00515 [0.01136] (0.01285 [0.02833])	0.04 [0.09]	0.06 [0.13]	0.34 [0.75]	0.21 [0.46]
80 [3.150]	2.15 [4.74] (2.32 [5.12])	2.53 [5.58] (2.70 [5.95])	3.00 [6.62] (3.17 [6.99])	3.75 [8.27] (3.92 [8.64])	3.07 [6.77] (3.24 [7.14])	3.79 [8.36] (3.96 [8.73])	3.23 [7.12] (3.40 [7.50])	3.31 [7.30] (3.48 [7.67])	4.03 [8.89] (4.20 [9.26])	0.00834 [0.01839] (0.02134 [0.04705])			0.87 [1.92]	0.62 [1.37]
100 [3.940]	3.22 [7.10] (3.43 [7.56])	3.69 [8.14] (3.90 [8.60])	4.50 [9.92] (4.71 [10.39])	5.44 [12.00] (5.65 [12.46])	4.46 [9.83] (4.67 [10.30])	5.18 [11.42] (5.39 [11.88])	4.61 [10.17] (4.82 [10.63])	4.75 [10.47] (4.96 [10.94])	5.47 [12.06] (5.68 [12.52])	0.01061 [0.02340] (0.02701 [0.05956])			1.47 [3.24]	1.24 [2.73]

Note: For lead wire length A (1000mm [39in.]).
Remark: Figures in parentheses ( ) are for steel tube specification.

Calculation example: For foot mounting type with bore size of 50mm, and stroke of 100mm,
1.43+(0.00428×100)=1.858kg [4.097lb.]

Dimensions of Basic Type (mm)

DDV Bore size × Stroke

CAD DDV Bore size

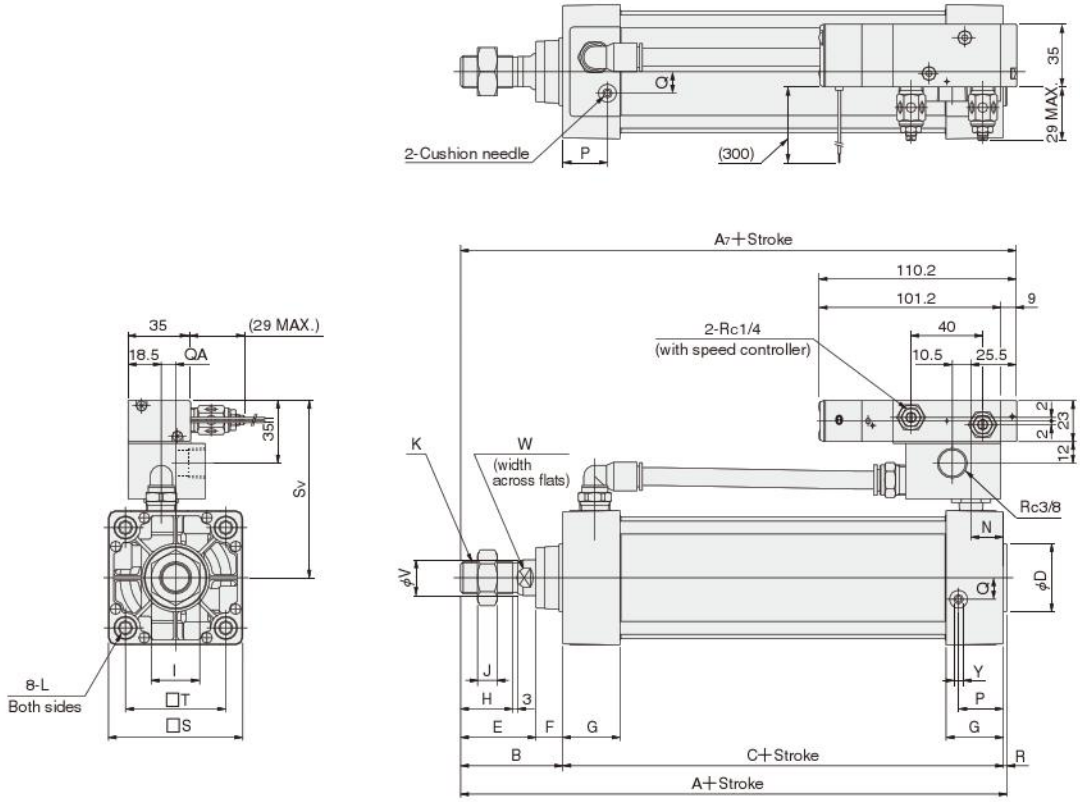

Bore mm [in.] \ Code	A	A_7	B	C	D	E	F	G	H	I	J	K
40 [1.575]	144	149.5	49	93	32	34	15	31	21	22	8	M14×1.5
50 [1.969]	152	157.5	57	93	38	42	15	31	29	27	11	M18×1.5
63 [2.480]	155	160.5	57	96	38	42	15	32	29	27	11	M18×1.5
80 [3.150]	185	188.5	75	108	44	54	21	36	37	32	13	M22×1.5
100 [3.940]	185	188.5	75	108	50	54	21	36	37	36	14	M26×1.5

Bore mm [in.] \ Code	L		N	P	Q	Q_A	R	S	S_V	T	V	W	Y
40 [1.575]	M6×1	Depth 14	18	25.5	10	4	2	50	(86.5)	37	16	14	2.5
50 [1.969]	M6×1	Depth 14	18	24	12	7	2	62	(92.5)	47	20	17	3
63 [2.480]	M8×1.25	Depth 14	18	25	12	8	2	75	(99)	56	20	17	3
80 [3.150]	M10×1.5	Depth 15	20	29	16	11	2	94	(108.5)	70	25	21	3
100 [3.940]	M10×1.5	Depth 15	20	29	18	12	2	112	(117.5)	84	30	26	3

Dimensions of Foot Mounting Type (mm)

DDV Bore size × Stroke **-1**

CAD Foot mounting bracket only
DDA Bore size -1

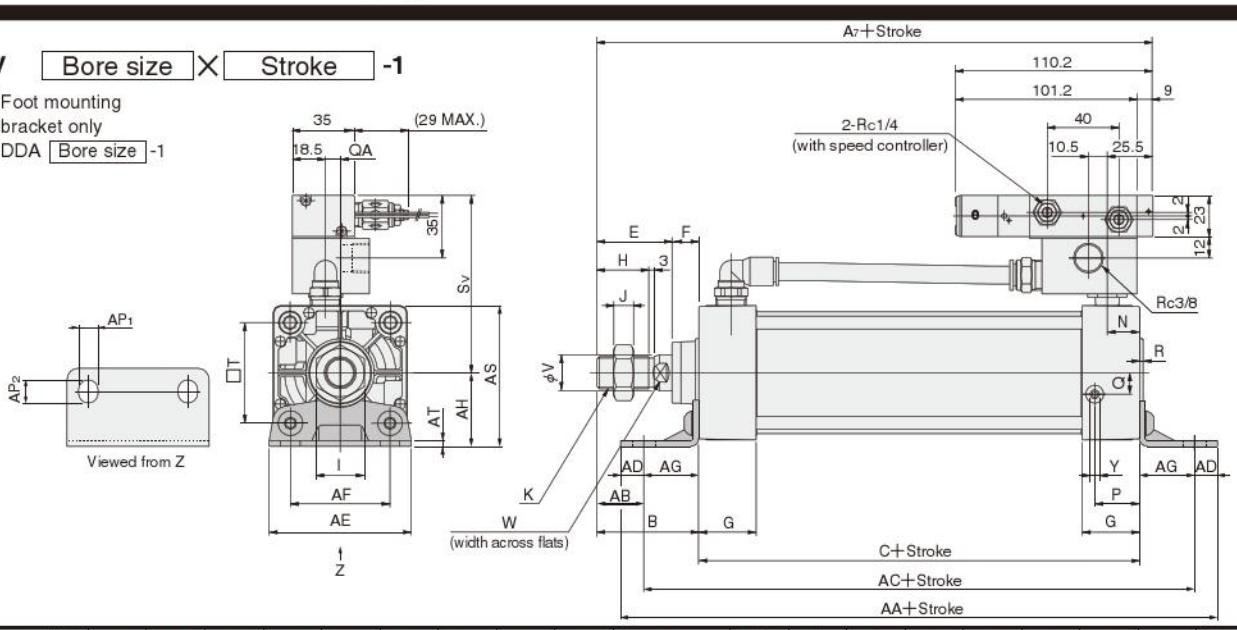

Bore mm [in.] \ Code	A7	B	C	E	F	G	H	I	J	K	N	P	Q	QA	R	Sv	T	V	W	Y
40 [1.575]	149.5	49	93	34	15	31	21	22	8	M14×1.5	18	25.5	10	4	2	(86.5)	37	16	14	2.5
50 [1.969]	157.5	57	93	42	15	31	29	27	11	M18×1.5	18	24	12	7	2	(92.5)	47	20	17	3
63 [2.480]	160.5	57	96	42	15	32	29	27	11	M18×1.5	18	25	12	8	2	(99)	56	20	17	3
80 [3.150]	188.5	75	108	54	21	36	37	32	13	M22×1.5	20	29	16	11	2	(108.5)	70	25	21	3
100 [3.940]	188.5	75	108	54	21	36	37	36	14	M26×1.5	20	29	18	12	2	(117.5)	84	30	26	3

Bore mm [in.] \ Code	AA	AB	AC	AD	AE	AF	AG	AH	AP1	AP2	AS	AT
40 [1.575]	165	25.5	140	12.5	57	36	23.5	30	11	13	55	3.2
50 [1.969]	173	29	149	12	68	47	28	36.5	11	13	67.5	3.2
63 [2.480]	184	26	158	13	80	56	31	41	11	13	78.5	3.2
80 [3.150]	200	45	168	16	97	70	30	49	14	16	96	4
100 [3.940]	200	45	168	16	112	84	30	57	14	16	113	4

Dimensions of Axial Foot Mounting Type (mm)

DDV Bore size × Stroke **-2**

CAD Axial foot mounting bracket only
DDA Bore size -2

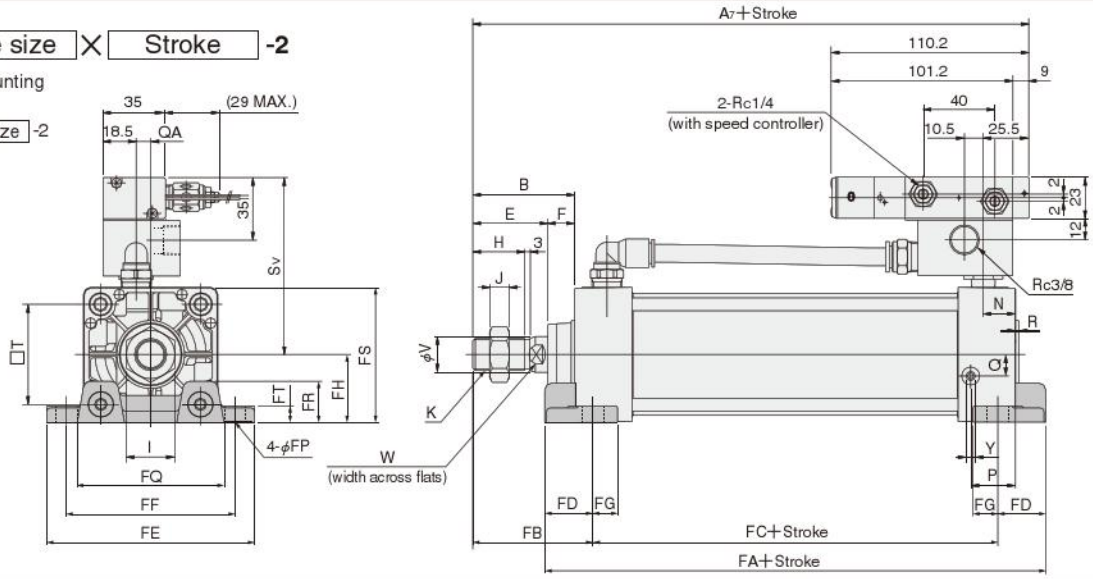

Bore mm [in.] \ Code	A7	B	E	F	H	I	J	K	N	P	Q	QA	R	Sv	T	V	W	Y
40 [1.575]	149.5	49	34	15	21	22	8	M14×1.5	18	25.5	10	4	2	(86.5)	37	16	14	2.5
50 [1.969]	157.5	57	42	15	29	27	11	M18×1.5	18	24	12	7	2	(92.5)	47	20	17	3
63 [2.480]	160.5	57	42	15	29	27	11	M18×1.5	18	25	12	8	2	(99)	56	20	17	3
80 [3.150]	188.5	75	54	21	37	32	13	M22×1.5	20	29	16	11	2	(108.5)	70	25	21	3
100 [3.940]	188.5	75	54	21	37	36	14	M26×1.5	20	29	18	12	2	(117.5)	84	30	26	3

Bore mm [in.] \ Code	FA	FB	FC	FD	FE	FF	FG	FH	FP	FQ	FR	FS	FT
40 [1.575]	119	59	73	23	92	70	14	25	12	58	16	50	8
50 [1.969]	123	67	73	25	105	83	14	31	12	68	17	62	9
63 [2.480]	130	67	76	27	117	95	14	38	12	84	22	75.5	9
80 [3.150]	150	88	82	34	147	121	18	47	14	104	28	94	13
100 [3.940]	158	88	82	38	168	140	18	57	14	120	30	113	14

Dimensions of Rod Side Flange Mounting Type (mm)

DDV Bore size × Stroke -3

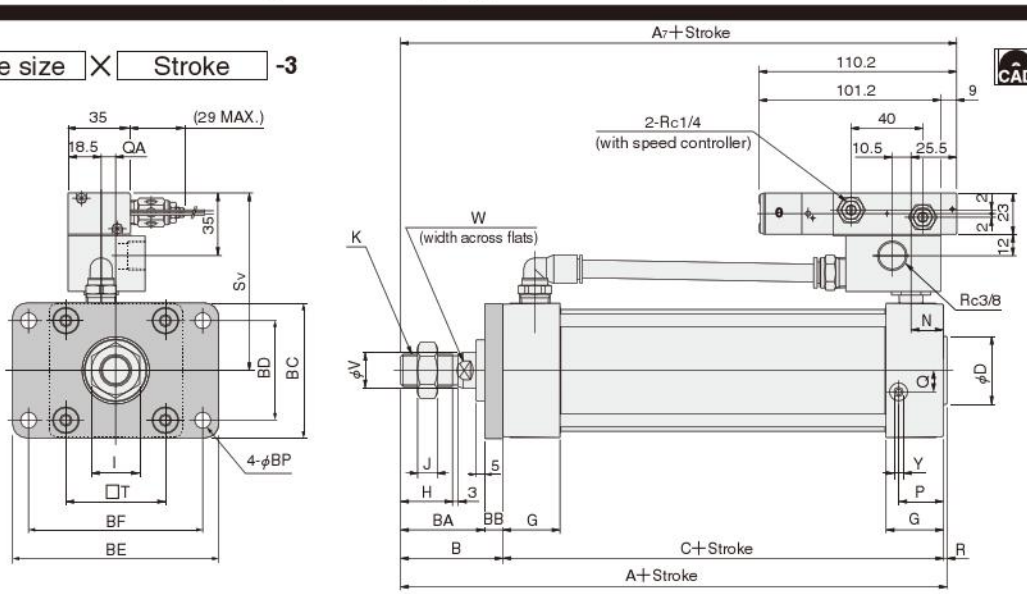

Flange mounting bracket only DDA Bore size -3

Bore mm[in.] \ Code	A	A_7	B	C	D	G	H	I	J	K	N	P	Q	Q_A	R	S_V	T	V	W	Y
40 [1.575]	144	149.5	49	93	32	31	21	22	8	M14×1.5	18	25.5	10	4	2	(86.5)	37	16	14	2.5
50 [1.969]	152	157.5	57	93	38	31	29	27	11	M18×1.5	18	24	12	7	2	(92.5)	47	20	17	3
63 [2.480]	155	160.5	57	96	38	32	29	27	11	M18×1.5	18	25	12	8	2	(99)	56	20	17	3
80 [3.150]	185	188.5	75	108	44	36	37	32	13	M22×1.5	20	29	16	11	2	(108.5)	70	25	21	3
100 [3.940]	185	188.5	75	108	50	36	37	36	14	M26×1.5	20	29	18	12	2	(117.5)	84	30	26	3

Bore mm[in.] \ Code	BA	BB	BC	BD	BE	BF	BP
40 [1.575]	39	10	52	36	84	70	7
50 [1.969]	47	10	65	47	104	86	9
63 [2.480]	47	10	76	56	116	98	9
80 [3.150]	59	16	95	70	143	119	12
100 [3.940]	59	16	115	84	162	138	12

Dimensions of Head Side Flange Mounting Type (mm)

DDV Bore size × Stroke -5

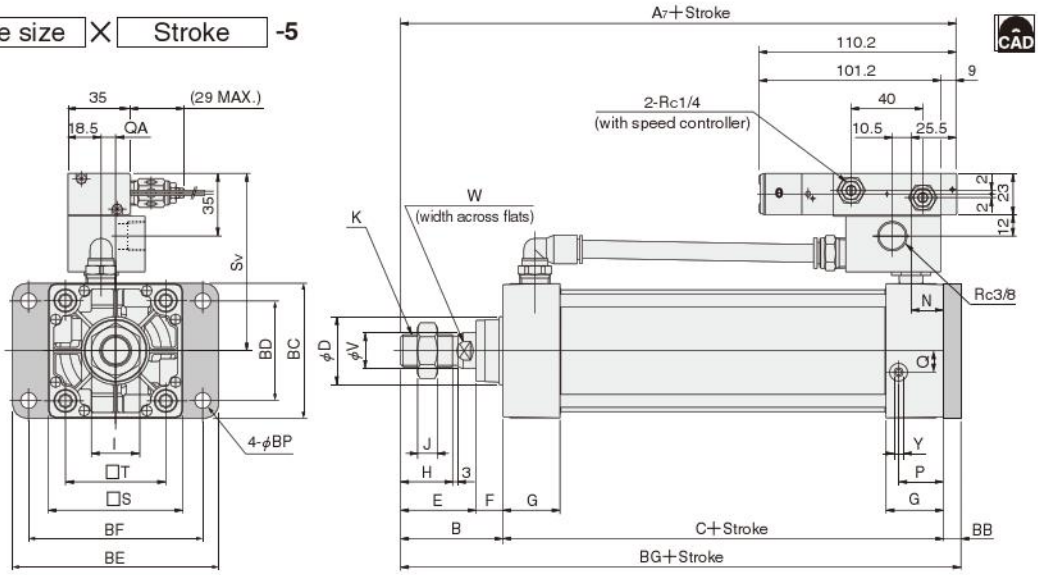

Flange mounting bracket only DDA Bore size -3

Bore mm[in.] \ Code	A_7	B	C	D	E	F	G	H	I	J	K	N	P	Q	Q_A	S	S_V	T	V	W	Y
40 [1.575]	149.5	49	93	32	34	15	31	21	22	8	M14×1.5	18	25.5	10	4	50	(86.5)	37	16	14	2.5
50 [1.969]	157.5	57	93	38	42	15	31	29	27	11	M18×1.5	18	24	12	7	62	(92.5)	47	20	17	3
63 [2.480]	160.5	57	96	38	42	15	32	29	27	11	M18×1.5	18	25	12	8	75	(99)	56	20	17	3
80 [3.150]	188.5	75	108	44	54	21	36	37	32	13	M22×1.5	20	29	16	11	94	(108.5)	70	25	21	3
100 [3.940]	188.5	75	108	50	54	21	36	37	36	14	M26×1.5	20	29	18	12	112	(117.5)	84	30	26	3

Bore mm[in.] \ Code	BB	BC	BD	BE	BF	BG	BP
40 [1.575]	10	52	36	84	70	152	7
50 [1.969]	10	65	47	104	86	160	9
63 [2.480]	10	76	56	116	98	163	9
80 [3.150]	16	95	70	143	119	199	12
100 [3.940]	16	115	84	162	138	199	12

Dimensions of Clevis Mounting Type (mm)

DDV Bore size × Stroke -7

CAD Clevis mounting bracket only DDA Bore size -7

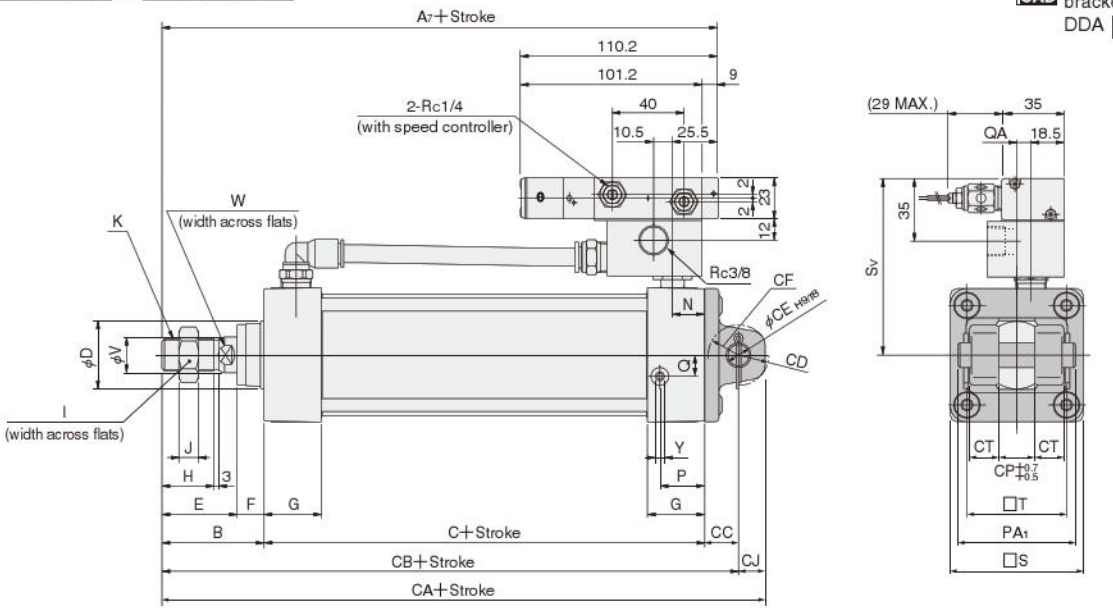

Bore mm [in.] \ Code	A7	B	C	D	E	F	G	H	I	J	K	N	P	Q	QA	S	SV	T	V	W	Y
40 [1.575]	149.5	49	93	32	34	15	31	21	22	8	M14×1.5	18	25.5	10	4	50	(86.5)	37	16	14	2.5
50 [1.969]	157.5	57	93	38	42	15	31	29	27	11	M18×1.5	18	24	12	7	62	(92.5)	47	20	17	3
63 [2.480]	160.5	57	96	38	42	15	32	29	27	11	M18×1.5	18	25	12	8	75	(99)	56	20	17	3
80 [3.150]	188.5	75	108	44	54	21	36	37	32	13	M22×1.5	20	29	16	11	94	(108.5)	70	25	21	3
100 [3.940]	188.5	75	108	50	54	21	36	37	36	14	M26×1.5	20	29	18	12	112	(117.5)	84	30	26	3

Bore mm [in.] \ Code	CA	CB	CC	CD	CE	CF	CJ	CP	CT	PA1
40 [1.575]	174	161	19	R15	14	R17	13	20	12.5	58
50 [1.969]	184	169	19	R17	14	R17	15	20	16.5	66
63 [2.480]	187	172	19	R17	14	R17	15	20	16.5	66
80 [3.150]	236	215	32	R24	20	R30	21	32	17.5	78
100 [3.940]	236	215	32	R24	20	R30	21	32	17.5	78

●With Supporting Bracket DDV Bore size × Stroke -7-7C

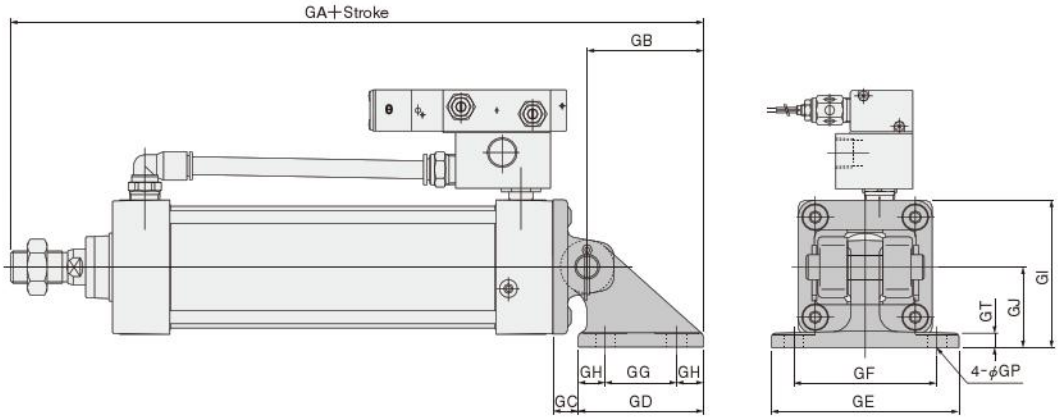

Bore mm [in.] \ Code	GA	GB	GC	GD	GE	GF	GG	GH	GI	GJ	GP	GT
40 [1.575]	227.5	66.5	12.5	73	105	80	40	16.5	70	45	11(Thru hole)	8
50 [1.969]	235.5	66.5	12.5	73	105	80	40	16.5	76	45	11(Thru hole)	8
63 [2.480]	238.5	66.5	12.5	73	105	80	40	16.5	82.5	45	11(Thru hole)	8
80 [3.150]	301.5	86.5	20.5	98	135	105	65	16.5	107	60	14(Thru hole)	12
100 [3.940]	301.5	86.5	20.5	98	135	105	65	16.5	116	60	14(Thru hole)	12

Dimensions of Pivot Mounting Type (mm)

DDV Bore size × Stroke **-8**

CAD Pivot mounting bracket only
DDA Bore size -8

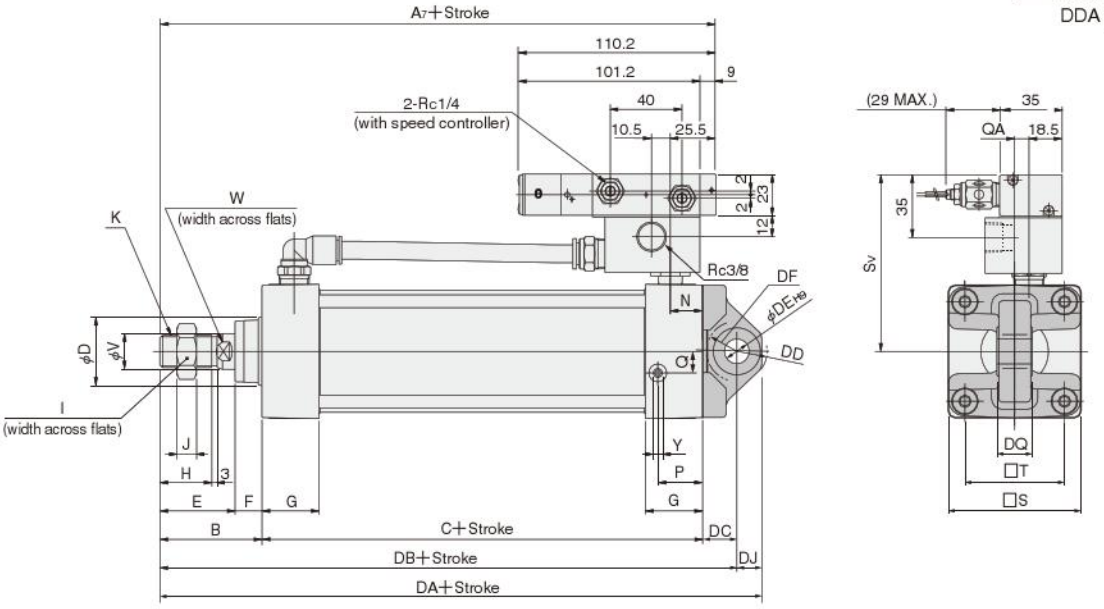

Bore mm [in.] / Code	A7	B	C	D	E	F	G	H	I	J	K	N	P	Q	QA	S	SV	T	V	W	Y
40 [1.575]	149.5	49	93	32	34	15	31	21	22	8	M14×1.5	18	25.5	10	4	50	(86.5)	37	16	14	2.5
50 [1.969]	157.5	57	93	38	42	15	31	29	27	11	M18×1.5	18	24	12	7	62	(92.5)	47	20	17	3
63 [2.480]	160.5	57	96	38	42	15	32	29	27	11	M18×1.5	18	25	12	8	75	(99)	56	20	17	3
80 [3.150]	188.5	75	108	44	54	21	36	37	32	13	M22×1.5	20	29	16	11	94	(108.5)	70	25	21	3
100 [3.940]	188.5	75	108	50	54	21	36	37	36	14	M26×1.5	20	29	18	12	112	(117.5)	84	30	26	3

Bore mm [in.] / Code	DA	DB	DC	DD	DE	DF	DJ	DQ
40 [1.575]	175	161	19	R17	14	R17	14	$20^{0}_{-0.084}$
50 [1.969]	183	169	19	R17	14	R17	14	$20^{0}_{-0.084}$
63 [2.480]	186	172	19	R17	14	R17	14	$20^{0}_{-0.084}$
80 [3.150]	236	215	32	R24	20	R25	21	$32^{0}_{-0.100}$
100 [3.940]	235	215	32	R24	20	R26	20	$32^{0}_{-0.100}$

Dimensions of Trunnion Type (mm)

DDV Bore size × Stroke **-11**

Trunnion bracket only DDA Bore size -11

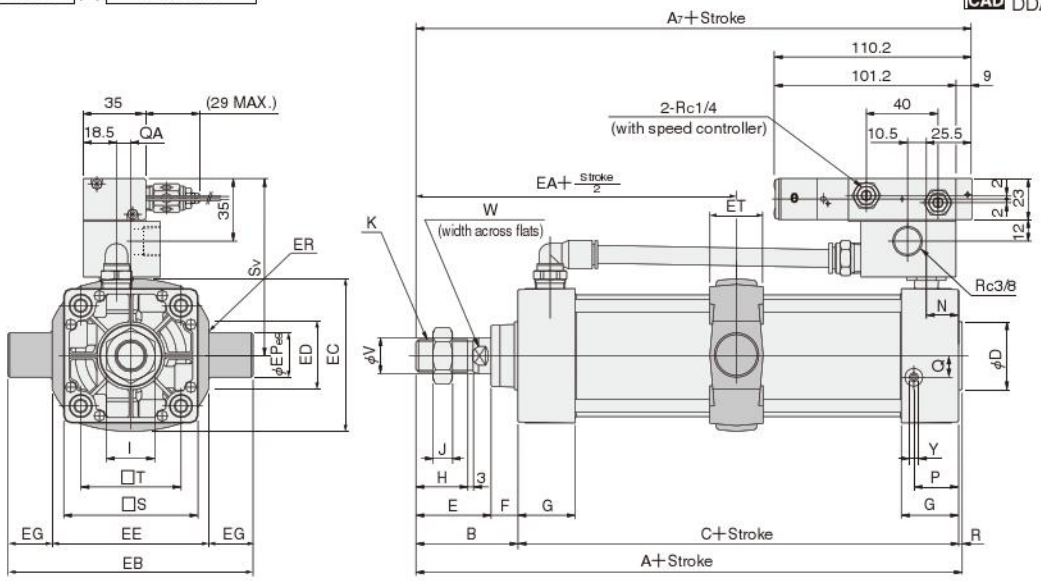

Bore mm [in.] \ Code	A	A_7	B	C	D	E	F	G	H	I	J	K	N	P	Q	Q_A	R	S	S_V	T	V	W	Y
40 [1.575]	144	149.5	49	93	32	34	15	31	21	22	8	M14×1.5	18	25.5	10	4	2	50	(86.5)	37	16	14	2.5
50 [1.969]	152	157.5	57	93	38	42	15	31	29	27	11	M18×1.5	18	24	12	7	2	62	(92.5)	47	20	17	3
63 [2.480]	155	160.5	57	96	38	42	15	32	29	27	11	M18×1.5	18	25	12	8	2	75	(99)	56	20	17	3
80 [3.150]	185	188.5	75	108	44	54	21	36	37	32	13	M22×1.5	20	29	16	11	2	94	(108.5)	70	25	21	3
100 [3.940]	185	188.5	75	108	50	54	21	36	37	36	14	M26×1.5	20	29	18	12	2	112	(117.5)	84	30	26	3

Bore mm [in.] \ Code	EA	EB	EC	ED	EE	EG	EP	ER	ET
40 [1.575]	95.5	113	60	30	63	25	25	R1.6	30
50 [1.969]	103.5	126	72	30	76	25	25	R1.6	30
63 [2.480]	105	138	87	40	88	25	25	R1.6	30
80 [3.150]	129	164	105	40	114	25	25	R1.6	35
100 [3.940]	129	182	129	44	132	25	25	R2	40

● With Supporting Brackets DDV Bore size × Stroke -11-11T

Trunnion supporting bracket only DDA Bore size -11T

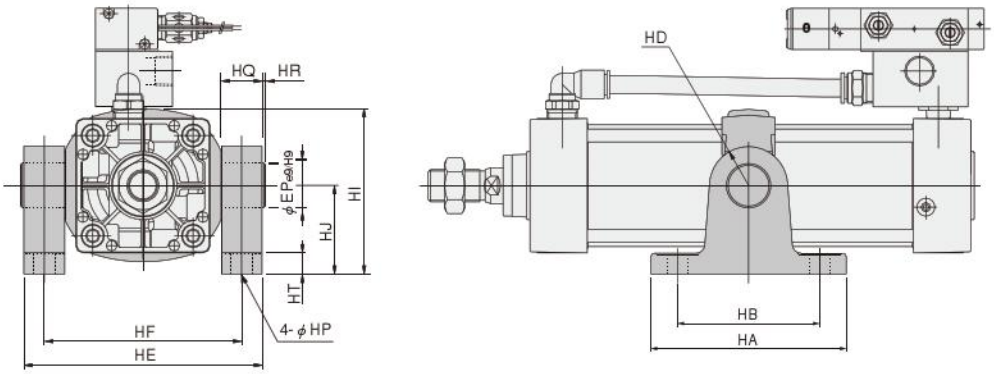

Bore mm [in.] \ Code	HA	HB	HD	HE	HF	HI	HJ	HP	HQ	HR	HT	EP
40 [1.575]	111	80	R22	109	86	80	50	12(Thru hole)	23	2	14	25
50 [1.969]	111	80	R22	122	99	86	50	12(Thru hole)	23	2	14	25
63 [2.480]	111	80	R22	134	111	93.5	50	12(Thru hole)	23	2	14	25
80 [3.150]	121	85	R22	160	137	122.5	70	12(Thru hole)	23	2	14	25
100 [3.940]	121	85	R22	178	155	134.5	70	12(Thru hole)	23	2	14	25

DYNA END KEEP CYLINDERS

Head Side End Keep, Rod Side End Keep

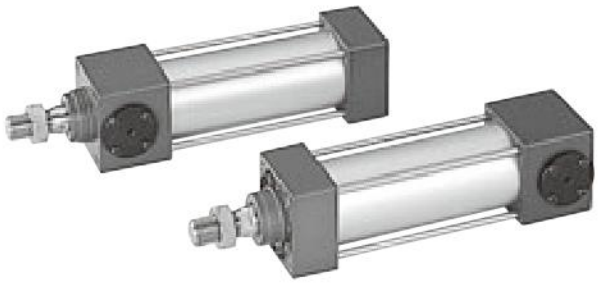

Symbols

●Head side end keep

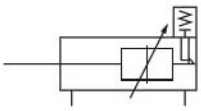

●Rod side end keep

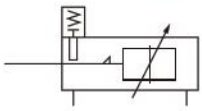

Specifications

Item / Bore size mm [in.]	40 [1.575]	50 [1.969]	63 [2.480]	80 [3.150]	100 [3.940]
Operation type	Double acting type with head side or rod side stroke end keep mechanism				
Media	Air				
Mounting type	Basic type, Foot type, Axial foot type, Rod side flange type, Head side flange type, Clevis type, Pivot type, Trunnion type				
Operating pressure range MPa [psi.]	0.15～1.0 [22～145]				
Proof pressure MPa [psi.]	1.5 [218]				
Operating temperature range °C [°F]	—10～70 [14～158] (Freezing prohibited, With sensor is 0～60 [32～140].)				
Operating speed range mm/s [in./sec.]	30～700 [1.2～27.6]				
Cushion	Variable cushion at both ends of stroke				
Cushion stroke mm [in.]	16 [0.630]	20 [0.787]		25 [0.984]	
Lubrication	Not required (If lubrication is required, use Turbine Oil Class 1 (ISO VG32) or equivalent.)				
Maximum holding force (at end keep) N [lbf.]	880 [198]	1374 [309]	2182 [491]	3519 [791]	5498 [1236]
Backlash (at end keep) mm [in.]	1.0 [0.039] MAX				
Port size Rc	1/4	3/8		1/2	

Bore Size and Stroke

mm

Bore size	Standard strokes	Maximum available stroke
40	50, 75, 100, 150, 200, 250, 300, 350, 400, 450, 500, 600, 700, 800	1000
50	50, 75, 100, 150, 200, 250, 300, 350, 400 450, 500, 600, 700, 800, 900, 1000	1500
63		
80		
100		

Remarks: 1. Stroke tolerance;
Strokes of 250 or less: $^{+1}_{0}$ [$^{+0.039}_{0}$ in.]
Strokes of 251～1000: $^{+1.5}_{0}$ [$^{+0.059}_{0}$ in.]
Strokes of 1001 or more: $^{+2.0}_{0}$ [$^{+0.079}_{0}$ in.]
2. For non-standard strokes, consult us.
3. Cylinders with magnets are not available for steel tube specification.
4. For the maximum available stroke with bellows specification, see p.538.

Order Codes

DDA [ ] **50×100** – [ ] – [ ] – [ ] – [ ] – [ ] – [ ] – [ ] [ ] [ ]

Bore size × Stroke

End keep position
HL— Head side end keep
RL— Rod side end keep

Non-ion specification
Blank — Standard
NCU— Non-ion specification

Tube material
Blank— Standard (Aluminum tube)
FT— Steel tube specification
(Not available for cylinder with magnet.)

Cylinder specification
K — End keep cylinder
JK— End keep cylinder with bellows

Mounting type
Blank — Basic type
1 — Foot mounting type
2 — Axial foot mounting type
3 — Rod side flange mounting type
5 — Head side flange mounting type
7 — Clevis mounting type (with pin)
7-7C — Clevis mounting type (with supporting bracket)
8 — Pivot mounting type
11 — Trunnion type
11-11T— Trunnion type (with supporting brackets)
●Mounting brackets are already assembled at shipping.
●Orders for mounting brackets only are also accepted.

Types of bellows
JT — Nylon tarpaulin (～80°C [176°F])
JC — Chloroprene (～100°C [212°F])
JK — Conex (～200°C [392°F])
JA — Alumix (～250°C [482°F])
●Conex is a registered trademark of Teijin, Inc.
●The temperatures shown are the bellows' own durable temperatures, and are not temperatures for cylinder use.

DYNA Cylinder
Basic model

Sensor switch

ZC130	2-lead wire	Solid state type	with indicator lamp	DC10～28V
ZC153	3-lead wire	Solid state type	with indicator lamp	DC4.5～28V
CS5T	2-lead wire	Reed switch type	without indicator lamp	DC5～28V AC85～115V
CS11T	2-lead wire	Reed switch type	with indicator lamp	DC10～28V
CS2F	DIN type	Reed switch type	with indicator lamp	AC85～230V
CS3F	DIN type	Reed switch type	with indicator lamp	DC10～30V
CS4F	DIN type	Reed switch type	with indicator lamp	DC10～30V
CS5F	DIN type	Reed switch type	without indicator lamp	DC3～30V

●For mounting location of sensor switch, see p.534.
●Cylinders with magnet are not available in steel tube specification.
●**CS□F** comes with a DIN connector. All others are grommet type.
●Orders for sensor switches only are also accepted.

Rod end accessory
Blank — No rod end accessory
Y — With Y type knuckle (with pin)
I — With I type knuckle
●For the cylinder joint and cylinder rod end, see p.1568.
●Orders for rod end accessories only are also accepted.
●For dimensions of rod end accessories, see p.537.

Number of sensor switches
1 — With 1 sensor switch
2 — With 2 sensor switches
⋮
n — With n sensor switches

Lead wire length
(Applicable only to **ZC,CS□T** types)
A : 1000mm [39in.]
B : 3000mm [118in.]

Inner Construction and Major Parts

●Head side end keep

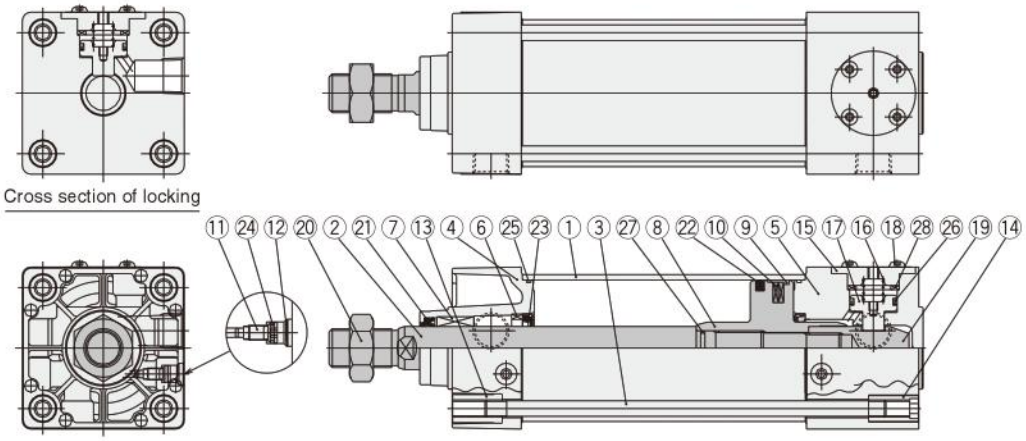

●Rod side end keep

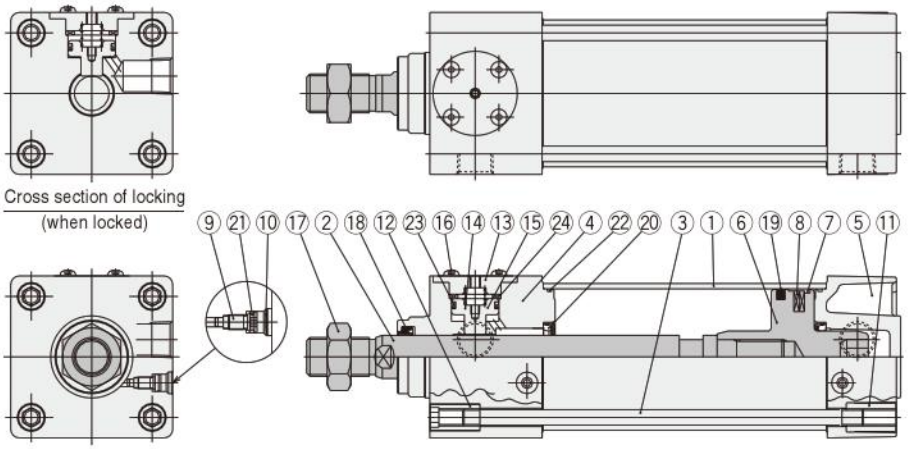

Major Parts and Materials

●Head side end keep

No.	Parts	Materials
①	Cylinder tube	Aluminum alloy
②	Piston rod	Carbon steel for machine structural use
③	Tie rod	Carbon steel for machine structural use
④	Rod cover	Aluminum die-casting
⑤	Head cover	Aluminum alloy
⑥	Keep ring	Aluminum alloy
⑦	Rod bushing	Oil impregnated sintered copper alloy
⑧	Piston	Aluminum alloy
⑨	Wear ring	Plastic
⑩	Magnet	Rubber magnet
⑪	Cushion needle	Carbon steel for machine structural use
⑫	Snap ring	Spring steel
⑬	Tie rod nut R	Rolled steel for general structural use
⑭	Tie rod nut H	Chrome-molybdenum steel
⑮	Lock cover	Aluminum alloy
⑯	Spring	Spring steel
⑰	Lock piston	Aluminum alloy
⑱	Button bolt	Chrome-molybdenum steel
⑲	Lock sleeve	Carbon steel for machine structural use
⑳	Rod end nut	Rolled steel for general structural use
㉑	Rod seal	Synthetic rubber (NBR)
㉒	Piston seal	Synthetic rubber (NBR)
㉓	Cushion seal	Synthetic rubber (NBR)
㉔	Cushion gasket	Synthetic rubber (NBR)
㉕	Tube gasket	Synthetic rubber (NBR)
㉖	Lock piston seal	Synthetic rubber (NBR)
㉗	Piston gasket	Synthetic rubber (NBR)
㉘	Bumper	Urethane rubber

●Rod side end keep

No.	Parts	Materials
①	Cylinder tube	Aluminum alloy
②	Piston rod	Carbon steel for machine structural use
③	Tie rod	Carbon steel for machine structural use
④	Rod cover	Aluminum alloy
⑤	Head cover	Aluminum die-casting
⑥	Piston	Aluminum alloy
⑦	Wear ring	Plastic
⑧	Magnet	Rubber magnet
⑨	Cushion needle	Carbon steel for machine structural use
⑩	Snap ring	Spring steel
⑪	Tie rod nut R	Rolled steel for general structural use
⑫	Tie rod nut H	Chrome-molybdenum steel
⑬	Lock cover	Aluminum alloy
⑭	Spring	Spring steel
⑮	Lock piston	Aluminum alloy
⑯	Button bolt	Chrome-molybdenum steel
⑰	Rod end nut	Rolled steel for general structural use
⑱	Rod seal	Synthetic rubber (NBR)
⑲	Piston seal	Synthetic rubber (NBR)
⑳	Cushion seal	Synthetic rubber (NBR)
㉑	Cushion gasket	Synthetic rubber (NBR)
㉒	Tube gasket	Synthetic rubber (NBR)
㉓	Lock piston seal	Synthetic rubber (NBR)
㉔	Bumper	Urethane rubber

Seals

Parts / Bore size mm / Quantity	Rod seal	Piston seal	Cushion seal	Tube gasket	Cushion gasket	Lock piston seal	Piston gasket
	1★	1★	2	2★	2	1	1 Note
40	DRP16	PWP40N	CPF20	1.5×40	S5	MYA18	S10
50	DRP20	PWP50N	CPF24	1.5×50	S6	MYA18	S14
63	DRP20	PWP63N	CPF24	1.5×63	S6	MYA18	S14
80	DRP25	PWP80N	CPF30	1.5×80	S6	MYA24	S18
100	DRP30	PWP100N	CPF35	1.5×100	S6	MYA24	S18

Note: Head side end keep only.

Remark: Items marked with a star (★) are available as repair kits.
Order codes: For end keep cylinders··· SRK-NDDAK [Bore size]

Mass

●Head side end keep

kg [lb.]

Bore size mm [in.]	Zero stroke mass: Basic type	Foot type	Axial foot type	Flange type	Clevis type (with pin)	Clevis type (w. supporting bkt.)	Pivot type	Trunnion type	Trunnion type (w. supporting bkt.)	Additional mass for each 1mm [0.0394in.] stroke	Mass of 1 sensor switch [with holder]: ZC□□□ CS□T Note	CS□F	Mass of knuckle: Y type knuckle (with pin)	I type knuckle
40 [1.575]	0.98 [2.16] (1.02 [2.25])	1.11 [2.45] (1.15 [2.54])	1.18 [2.60] (1.22 [2.69])	1.35 [2.98] (1.39 [3.06])	1.25 [2.76] (1.29 [2.84])	1.95 [4.30] (1.99 [4.39])	1.16 [2.56] (1.20 [2.65])	1.46 [3.22] (1.50 [3.31])	1.96 [4.32] (2.00 [4.41])	0.00300 [0.00662] (0.00431 [0.00950])	0.04 [0.09]	0.05 [0.11]	0.27 [0.60]	0.16 [0.35]
50 [1.969]	1.55 [3.42] (1.61 [3.55])	1.72 [3.79] (1.78 [3.92])	1.87 [4.12] (1.93 [4.26])	1.94 [4.28] (2.00 [4.41])	1.94 [4.28] (2.00 [4.41])	2.64 [5.82] (2.70 [5.95])	1.81 [3.99] (1.87 [4.12])	2.10 [4.63] (2.16 [4.76])	2.60 [5.73] (2.66 [5.87])	0.00428 [0.00944] (0.00635 [0.01400])			0.34 [0.75]	0.21 [0.46]
63 [2.480]	2.06 [4.54] (2.14 [4.72])	2.29 [5.05] (2.37 [5.23])	2.58 [5.69] (2.66 [5.87])	2.59 [5.71] (2.67 [5.89])	2.54 [5.60] (2.62 [5.78])	3.24 [7.14] (3.32 [7.32])	2.48 [5.47] (2.56 [5.64])	2.76 [6.09] (2.84 [6.26])	3.26 [7.19] (3.34 [7.36])	0.00515 [0.01136] (0.00773 [0.01704])	0.04 [0.09]	0.06 [0.13]	0.34 [0.75]	0.21 [0.46]
80 [3.150]	3.69 [8.14] (3.86 [8.51])	4.07 [8.97] (4.24 [9.35])	4.54 [10.01] (4.71 [10.39])	5.29 [11.66] (5.46 [12.04])	4.61 [10.17] (4.78 [10.54])	5.33 [11.75] (5.50 [12.13])	4.77 [10.52] (4.94 [10.89])	4.85 [10.69] (5.02 [11.07])	5.57 [12.28] (5.74 [12.66])	0.00834 [0.01839] (0.01302 [0.02871])			0.87 [1.92]	0.62 [1.37]
100 [3.940]	4.83 [10.65] (5.04 [11.11])	5.30 [11.69] (5.51 [12.15])	6.11 [13.47] (6.32 [13.94])	7.05 [15.55] (7.26 [16.01])	6.07 [13.38] (6.28 [13.85])	6.79 [14.97] (7.00 [15.44])	6.22 [13.72] (6.43 [14.18])	6.36 [14.02] (6.57 [14.49])	7.08 [15.61] (7.29 [16.07])	0.01061 [0.02340] (0.01642 [0.03621])			1.47 [3.24]	1.24 [2.73]

Note: For lead wire length A (1000mm [39in.]).
Remark: Figures in parentheses ( ) are for steel tube specification.

Calculation example: For foot mounting type with bore size of 50mm, and stroke of 100mm,
1.72+(0.00428×100)=2.148kg [4.736lb.]

●Rod side end keep

kg [lb.]

Bore size mm [in.]	Zero stroke mass: Basic type	Foot type	Axial foot type	Flange type	Clevis type (with pin)	Clevis type (w. supporting bkt.)	Pivot type	Trunnion type	Trunnion type (w. supporting bkt.)	Additional mass for each 1mm [0.0394in.] stroke	Mass of 1 sensor switch [with holder]: ZC□□□ CS□T Note	CS□F	Mass of knuckle: Y type knuckle (with pin)	I type knuckle
40 [1.575]	0.94 [2.07] (0.98 [2.16])	1.07 [2.36] (1.11 [2.45])	1.14 [2.51] (1.18 [2.60])	1.31 [2.89] (1.35 [2.98])	1.21 [2.67] (1.25 [2.76])	1.91 [4.21] (1.95 [4.30])	1.12 [2.47] (1.16 [2.56])	1.42 [3.13] (1.46 [3.22])	1.92 [4.23] (1.96 [4.32])	0.00300 [0.00662] (0.00431 [0.00950])	0.04 [0.09]	0.05 [0.11]	0.27 [0.60]	0.16 [0.35]
50 [1.969]	1.49 [3.29] (1.55 [3.42])	1.66 [3.66] (1.72 [3.79])	1.81 [3.99] (1.87 [4.12])	1.88 [4.15] (1.94 [4.28])	1.88 [4.15] (1.94 [4.28])	2.58 [5.69] (2.64 [5.82])	1.75 [3.86] (1.81 [3.99])	2.04 [4.50] (2.10 [4.63])	2.54 [5.60] (2.60 [5.73])	0.00428 [0.00944] (0.00635 [0.01400])			0.34 [0.75]	0.21 [0.46]
63 [2.480]	2.00 [4.41] (2.08 [4.59])	2.23 [4.92] (2.31 [5.09])	2.52 [5.56] (2.60 [5.73])	2.53 [5.58] (2.61 [5.76])	2.48 [5.47] (2.56 [5.64])	3.18 [7.01] (3.26 [7.19])	2.42 [5.34] (2.50 [5.51])	2.70 [5.95] (2.78 [6.13])	3.20 [7.06] (3.28 [7.23])	0.00515 [0.01136] (0.00773 [0.01704])	0.04 [0.09]	0.06 [0.13]	0.34 [0.75]	0.21 [0.46]
80 [3.150]	3.58 [7.89] (3.75 [8.27])	3.96 [8.73] (4.13 [9.11])	4.43 [9.77] (4.60 [10.14])	5.18 [11.42] (5.35 [11.80])	4.50 [9.92] (4.67 [10.30])	5.22 [11.51] (5.39 [11.88])	4.66 [10.28] (4.83 [10.65])	4.74 [10.45] (4.91 [10.83])	5.46 [12.04] (5.63 [12.41])	0.00834 [0.01839] (0.01302 [0.02871])			0.87 [1.92]	0.62 [1.37]
100 [3.940]	4.67 [10.30] (4.88 [10.76])	5.14 [11.33] (5.35 [11.80])	5.95 [13.12] (6.16 [13.58])	6.89 [15.19] (7.10 [15.66])	5.91 [13.03] (6.12 [13.49])	6.63 [14.62] (6.84 [15.08])	6.06 [13.36] (6.27 [13.83])	6.20 [13.67] (6.41 [14.13])	6.92 [15.26] (7.13 [15.72])	0.01061 [0.02340] (0.01642 [0.03621])			1.47 [3.24]	1.24 [2.73]

Note: For lead wire length A (1000mm [39in.]).
Remark: Figures in parentheses ( ) are for steel tube specification.

Calculation example: For foot mounting type with bore size of 50mm, and stroke of 100mm,
1.66+(0.00428×100)=2.088kg [4.604lb.]

Dimensions of Head Side End Keep, Basic Type (mm)

DDAK [Bore size] × [Stroke] **-HL**

CAD DDAK [Bore size] HL

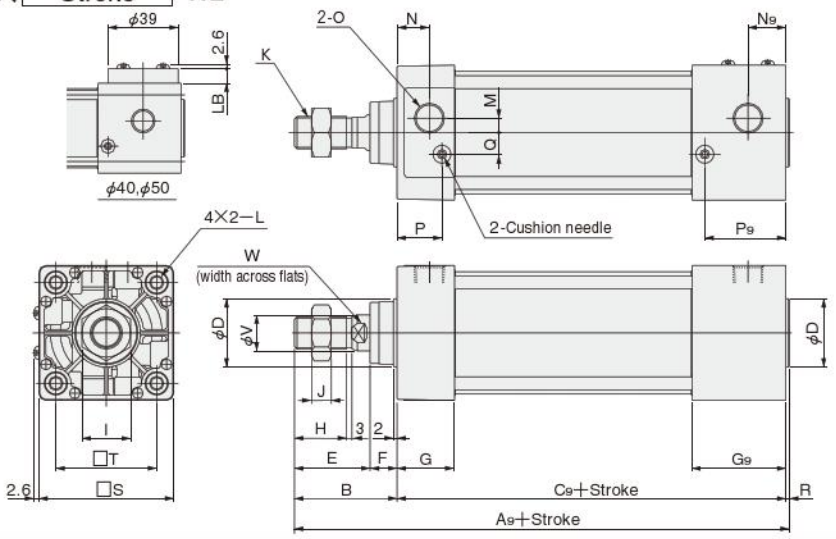

Bore mm [in.] / Code	A9	B	C9	D	E	F	G	G9	H	I	J	K
40 [1.575]	159	49	108	32	34	15	31	46	21	22	8	M14×1.5
50 [1.969]	172	57	113	38	42	15	31	51	29	27	11	M18×1.5
63 [2.480]	175	57	116	38	42	15	32	52	29	27	11	M18×1.5
80 [3.150]	210	75	133	44	54	21	36	61	37	32	13	M22×1.5
100 [3.940]	210	75	133	50	54	21	36	61	37	36	14	M26×1.5

Bore mm [in.] / Code	L	M	N	N9	O	P	P9	Q	R	S	T	V	W	LB
40 [1.575]	M6×1 Depth 14	4	18	21	Rc1/4	25.5	40.5	10	2	50	37	16	14	8
50 [1.969]	M6×1 Depth 14	7	18	21	Rc3/8	24	44	12	2	62	47	20	17	4
63 [2.480]	M8×1.25 Depth 14	8	18	21	Rc3/8	25	45	12	2	75	56	20	17	—
80 [3.150]	M10×1.5 Depth 15	11	20	24	Rc1/2	29	54	16	2	94	70	25	21	—
100 [3.940]	M10×1.5 Depth 15	12	20	24	Rc1/2	29	54	18	2	112	84	30	26	—

Dimensions of Rod Side End Keep, Basic Type (mm)

DDAK Bore size × Stroke **-RL**

CAD DDAK Bore size RL

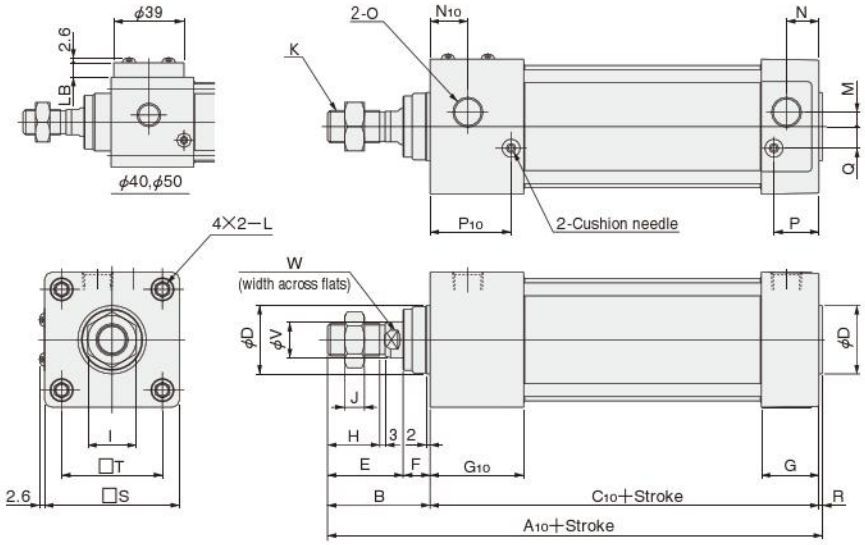

Bore mm [in.] \ Code	A10	B	C10	D	E	F	G	G10	H	I	J	K
40 [1.575]	159	49	108	32	34	15	31	46	21	22	8	M14×1.5
50 [1.969]	172	57	113	38	42	15	31	51	29	27	11	M18×1.5
63 [2.480]	175	57	116	38	42	15	32	52	29	27	11	M18×1.5
80 [3.150]	210	75	133	44	54	21	36	61	37	32	13	M22×1.5
100 [3.940]	210	75	133	50	54	21	36	61	37	36	14	M26×1.5

Bore mm [in.] \ Code	L	M	N	N10	O	P	P10	Q	R	S	T	V	W	LB
40 [1.575]	M6×1 Depth 14	4	18	21	Rc1/4	25.5	40.5	10	2	50	37	16	14	8
50 [1.969]	M6×1 Depth 14	7	18	21	Rc3/8	24	44	12	2	62	47	20	17	4
63 [2.480]	M8×1.25 Depth 14	8	18	21	Rc3/8	25	45	12	2	75	56	20	17	—
80 [3.150]	M10×1.5 Depth 15	11	20	24	Rc1/2	29	54	16	2	94	70	25	21	—
100 [3.940]	M10×1.5 Depth 15	12	20	24	Rc1/2	29	54	18	2	112	84	30	26	—

● For dimensions of end keep cylinder with mounting brackets, see the dimensions of Standard Cylinder. Note that overall length of the body of end keep cylinder with mounting brackets differs from the Standard Cylinder.

DYNA CYLINDERS WITH BRAKES

Single Brake, Double Brake

Symbol

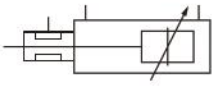

Specifications

Item / Bore size mm [in.]		40 [1.575]	50 [1.969]	63 [2.480]	80 [3.150]	100 [3.940]
Operation type		Double acting type				
Media		Air				
Mounting type		Basic type, Foot type, Axial foot type, Rod side flange type, Head side flange type, Clevis type, Pivot type				
Operating pressure range	MPa [psi.]	0.1～1.0 [15～145]				
Proof pressure	MPa [psi.]	1.5 [218]				
Operating temperature range	°C [°F]	5～60 [41～140]				
Operating speed range	mm/s [in./sec.]	50～300 [2.0～11.8]				
Cushion		Variable cushion at both ends of stroke				
Cushion stroke	mm [in.]	16 [0.630]	20 [0.787]		25 [0.984]	
Lubrication		Required (Turbine Oil Class 1 (ISO VG32) or equivalent.)				
Brake release pressure	MPa [psi.]	0.35 [51]	0.4 [58]	0.35 [51]		
Brake activating direction		Two directions				
Repeatability	mm [in.]	±2 [0.079]				
Maximum load capacity	N [lbf.] Single brake	333 [75]	519 [117]	833 [187]	1352 [304]	2107 [474]
	N [lbf.] Double brake	666 [150]	1038 [233]	1666 [375]	2705 [608]	4214 [947]
Port size	Rc	1/4	3/8		1/2	
Brake unit connection port	Rc	1/4			3/8	

Bore Size and Stroke

mm

Bore size	Standard strokes	Maximum available stroke
40	50, 75, 100, 150, 200, 250, 300, 350, 400, 450, 500, 600, 700, 800	1000
50	50, 75, 100, 150, 200, 250, 300, 350, 400, 450, 500, 600, 700, 800, 900, 1000	1500
63		
80		
100		

Remarks: 1. Stroke tolerance;
Strokes of 250 or less: $^{+1}_{0}$ [$^{+0.039}_{0}$ in.]
Strokes of 251～1000: $^{+1.5}_{0}$ [$^{+0.059}_{0}$ in.]
Strokes of 1001 or more: $^{+2.0}_{0}$ [$^{+0.079}_{0}$ in.]
2. For non-standard strokes, consult us.
3. Cylinders with magnets are not available for heat resistant specification and steel tube specification.
4. For the maximum available stroke with bellows specification, see p.538.

Order Codes

DDA □ **50×100** – □ – □ – □ – □ – □ □ □

Bore size × Stroke

Types of bellows
- **JT** — Nylon tarpaulin (～80°C [176°F])
- **JC** — Chloroprene (～100°C [212°F])
- **JK** — Conex (～200°C [392°F])
- **JA** — Alumix (～250°C [482°F])

●Conex is a registered trademark of Teijin, Inc.
●The temperatures shown are the bellows' own durable temperatures, and are not temperatures for cylinder use.

Cylinder specification
- **R** — Single brake cylinder
- **RR** — Double brake cylinder
- **JR** — Single brake cylinder with bellows
- **JRR** — Double brake cylinder with bellows

Tube material
- **Blank** — Standard (Aluminum tube)
- **FT** — Steel tube specification (Not available for cylinder with magnet.)

DYNA Cylinder Basic model

Mounting type
- **Blank** — Basic type
- **1** — Foot mounting type
- **2** — Axial foot mounting type
- **3** — Rod side flange mounting type
- **5** — Head side flange mounting type
- **7** — Clevis mounting type (with pin)
- **7-7C** — Clevis mounting type (with supporting bracket)
- **8** — Pivot mounting type

●Mounting brackets are already assembled at shipping.

Sensor switch (For cylinder with magnet)

ZC130	2-lead wire	Solid state type	with indicator lamp	DC10～28V
ZC153	3-lead wire	Solid state type	with indicator lamp	DC4.5～28V
CS5T	2-lead wire	Reed switch type	without indicator lamp	DC5～28V AC85～115V
CS11T	2-lead wire	Reed switch type	with indicator lamp	DC10～28V
CS2F	DIN type	Reed switch type	with indicator lamp	AC85～230V
CS3F	DIN type	Reed switch type	with indicator lamp	DC10～30V
CS4F	DIN type	Reed switch type	with indicator lamp	DC10～30V
CS5F	DIN type	Reed switch type	without indicator lamp	DC3～30V

●For mounting location of sensor switch, see p.534.
●**CS□F** comes with a DIN connector. All others are grommet type.
●Orders for sensor switches only are also accepted.

Rod end accessory
- **Blank** — No rod end accessory
- **Y** — With Y type knuckle (with pin)
- **I** — With I type knuckle

●For the cylinder joint and cylinder rod end, see p.1568.
●Orders for rod end accessories only are also accepted.
●For dimensions of rod end accessories, see p.537.

Number of sensor switches
- **1** — With 1 sensor switch
- **2** — With 2 sensor switches
- ⋮ ⋮
- **n** — With n sensor switches

Lead wire length (Applicable only to **ZC,CS□T** types)
- **A** : 1000mm
- **B** : 3000mm

Inner Construction and Major Parts

●Single brake ϕ40 [1.575in.], ϕ50 [1.969in.]

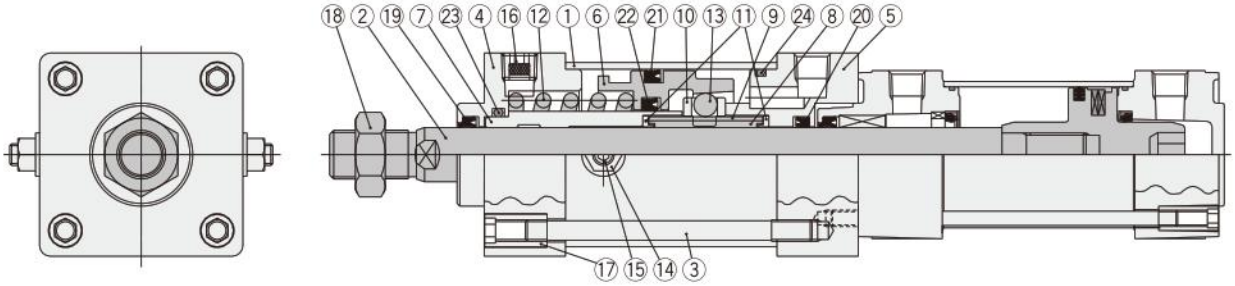

●Single brake ϕ63 [2.480in.]～ ϕ100 [3.940in.]

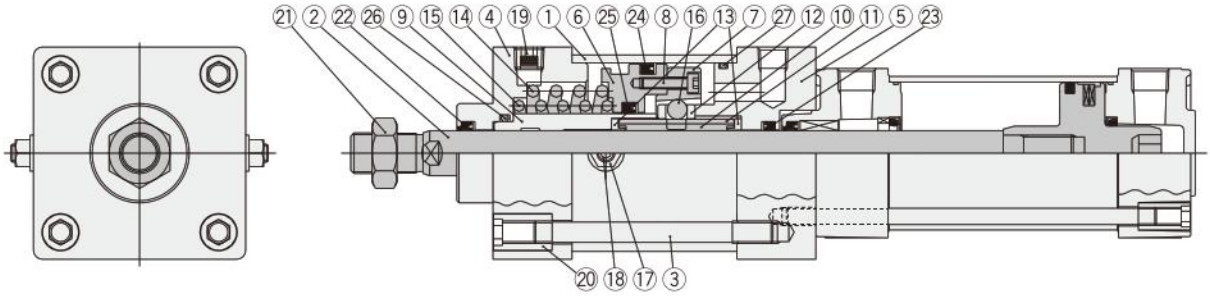

Major Parts and Materials

Note: For the cylinder body, see the DYNA Standard Cylinders.

●Single brake ϕ40, ϕ50

No.	Parts	Materials
①	Brake tube	Carbon steel for machine structural use
②	Piston rod	Carbon steel for machine structural use
③	Brake tie rod	Carbon steel for machine structural use
④	Front cover	Aluminum alloy
⑤	Rear cover	Aluminum alloy
⑥	Brake piston	Cast iron
⑦	Spacer S	Plastic
⑧	Brake shoe	Phosphor bronze
⑨	Ring	High carbon chrome bearing steel
⑩	Retainer A	High carbon chrome bearing steel
⑪	Retainer B	Carbon steel for machine structural use
⑫	Spring	Piano wire
⑬	Steel ball	High carbon chrome bearing steel
⑭	Lock nut	Rolled steel for general structural use
⑮	Brake lock release screw	Chrome-molybdenum steel
⑯	Filter	Chrome-molybdenum steel+plastic
⑰	Tie rod nut H	Chrome-molybdenum steel
⑱	Rod end nut	Rolled steel for general structural use
⑲	Rod seal A at brake section	Synthetic rubber (NBR)
⑳	Rod seal B at brake section	Synthetic rubber (NBR)
㉑	Brake piston seal A	Synthetic rubber (NBR)
㉒	Brake piston seal B	Synthetic rubber (NBR)
㉓	Spacer gasket	Synthetic rubber (NBR)
㉔	Rear cover gasket	Synthetic rubber (NBR)

●Single brake ϕ63～ ϕ100

No.	Parts	Materials
①	Brake tube	Carbon steel for machine structural use
②	Piston rod	Carbon steel for machine structural use
③	Brake tie rod	Carbon steel for machine structural use
④	Front cover	Aluminum alloy
⑤	Rear cover	Aluminum alloy
⑥	Brake piston	Cast iron
⑦	Taper ring	High carbon chrome bearing steel
⑧	Hexagon socket bolt	Chrome-molybdenum steel
⑨	Spacer S	Plastic
⑩	Brake shoe	Phosphor bronze
⑪	Ring	High carbon chrome bearing steel
⑫	Retainer A	High carbon chrome bearing steel
⑬	Retainer B	Carbon steel for machine structural use
⑭	Spring A	Piano wire
⑮	Spring B	Piano wire
⑯	Steel ball	High carbon chrome bearing steel
⑰	Lock nut	Rolled steel for general structural use
⑱	Brake lock release screw	Chrome-molybdenum steel
⑲	Filter	Chrome-molybdenum steel+plastic
⑳	Tie rod nut H	Chrome-molybdenum steel
㉑	Rod end nut	Rolled steel for general structural use
㉒	Rod seal A at brake section	Synthetic rubber (NBR)
㉓	Rod seal B at brake section	Synthetic rubber (NBR)
㉔	Brake piston seal A	Synthetic rubber (NBR)
㉕	Brake piston seal B	Synthetic rubber (NBR)
㉖	Spacer gasket	Synthetic rubber (NBR)
㉗	Rear cover gasket	Synthetic rubber (NBR)

Inner Construction and Major Parts

● Double brake ϕ40 [1.575in.], ϕ50 [1.969in.]

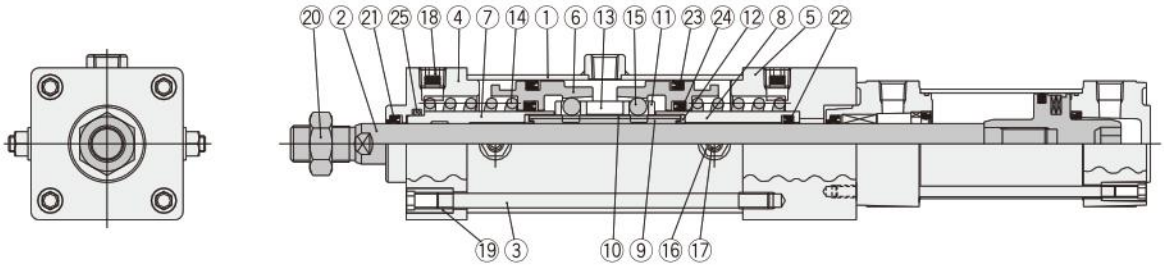

● Double brake ϕ63 [2.480in.]～ ϕ100 [3.940in.]

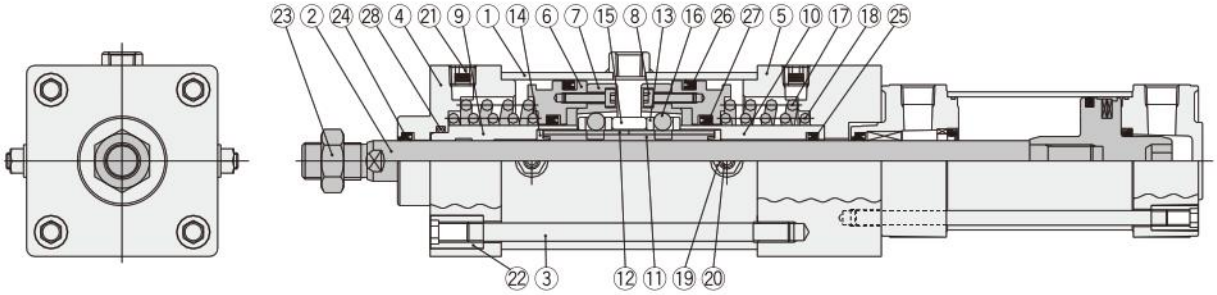

Major Parts and Materials

Note: For the cylinder body, see the DYNA Standard Cylinders.

● Double brake ϕ40, ϕ50

No.	Parts	Materials
①	Brake tube	Carbon steel for machine structural use
②	Piston rod	Carbon steel for machine structural use
③	Brake tie rod	Carbon steel for machine structural use
④	Front cover	Aluminum alloy
⑤	Rear cover	Aluminum alloy
⑥	Brake piston	Cast iron
⑦	Spacer S	Plastic
⑧	Spacer D	Plastic
⑨	Brake shoe	Phosphor bronze
⑩	Ring	High carbon chrome bearing steel
⑪	Retainer A	High carbon chrome bearing steel
⑫	Retainer B	Carbon steel for machine structural use
⑬	Retainer D	Carbon steel for machine structural use
⑭	Spring	Piano wire
⑮	Steel ball	High carbon chrome bearing steel
⑯	Lock nut	Rolled steel for general structural use
⑰	Brake lock release screw	Chrome-molybdenum steel
⑱	Filter	Chrome-molybdenum steel＋plastic
⑲	Tie rod nut H	Chrome-molybdenum steel
⑳	Rod end nut	Rolled steel for general structural use
㉑	Rod seal A at brake section	Synthetic rubber (NBR)
㉒	Rod seal B at brake section	Synthetic rubber (NBR)
㉓	Brake piston seal A	Synthetic rubber (NBR)
㉔	Brake piston seal B	Synthetic rubber (NBR)
㉕	Spacer gasket	Synthetic rubber (NBR)

● Double brake ϕ63～ ϕ100

No.	Parts	Materials
①	Brake tube	Carbon steel for machine structural use
②	Piston rod	Carbon steel for machine structural use
③	Brake tie rod	Carbon steel for machine structural use
④	Front cover	Aluminum alloy
⑤	Rear cover	Aluminum alloy
⑥	Brake piston	Cast iron
⑦	Taper ring	High carbon chrome bearing steel
⑧	Hexagon socket bolt	Chrome-molybdenum steel
⑨	Spacer S	Plastic
⑩	Spacer D	Plastic
⑪	Brake shoe	Phosphor bronze
⑫	Ring	High carbon chrome bearing steel
⑬	Retainer A	High carbon chrome bearing steel
⑭	Retainer B	Carbon steel for machine structural use
⑮	Retainer D	Carbon steel for general structural use
⑯	Steel ball	High carbon chrome bearing steel
⑰	Spring A	Piano wire
⑱	Spring B	Piano wire
⑲	Lock nut	Rolled steel for general structural use
⑳	Brake lock release screw	Chrome-molybdenum steel
㉑	Filter	Chrome-molybdenum steel＋Plastic
㉒	Tie rod nut H	Chrome-molybdenum steel
㉓	Rod end nut	Rolled steel for general structural use
㉔	Rod seal A at brake section	Synthetic rubber (NBR)
㉕	Rod seal B at brake section	Synthetic rubber (NBR)
㉖	Brake piston seal A	Synthetic rubber (NBR)
㉗	Brake piston seal B	Synthetic rubber (NBR)
㉘	Spacer gasket	Synthetic rubber (NBR)

Seals

●Single brake

Parts	Rod seal for front cover	Rod seal for rear cover	Piston seal A	Piston seal B	Spacer gasket	Rear cover gasket
Bore size mm / Quantity	1	1	1	1	1	1
40	DRP16	PNU16	PNU40	PNU28	P22	G45
50	DRP20	PNU20	PNU53	PNU32	P28	G58
63	DRP20	PNU20	PNU70	GLY35	P28	G75
80	DRP25	PNU25A	PNU85	PNU45	P32	G95
100	DRP30	PNU30	PNU115	PNU50	P40	G120

●Double brake

Parts	Rod seal for front cover	Rod seal for rear cover	Piston seal A	Piston seal B	Spacer gasket
Bore size mm / Quantity	1	1	2	2	1
40	DRP16	PNU16	PNU40	PNU28	P22
50	DRP20	PNU20	PNU53	PNU32	P28
63	DRP20	PNU20	PNU70	GLY35	P28
80	DRP25	PNU25A	PNU85	PNU45	P32
100	DRP30	PNU30	PNU115	PNU50	P40

Mass

●Single brake

kg [lb.]

Bore size mm [in.]	Zero stroke mass								Additional mass for each 1mm [0.0394in.] stroke	Mass of 1 sensor switch [with holder]		Mass of knuckle	
	Basic type	Foot mounting type	Axial foot mounting type	Rod side flange mounting type	Head side flange mounting type	Clevis mounting type (with pin)	Clevis mtg. type (w. supporting bkt.)	Pivot mtg. type		ZC□□□ CS□T Note	CS□F	Y type knuckle (with pin)	I type knuckle
40 [1.575]	2.21 [4.87] (2.25 [4.96])	2.38 [5.25] (2.42 [5.34])	2.51 [5.53] (2.55 [5.62])	2.60 [5.73] (2.64 [5.82])	2.58 [5.69] (2.62 [5.78])	2.48 [5.47] (2.52 [5.56])	3.18 [7.01] (3.22 [7.10])	2.39 [5.27] (2.43 [5.36])	0.00300 [0.00662] (0.00431 [0.00950])	0.04 [0.09]	0.05 [0.11]	0.27 [0.60]	0.16 [0.35]
50 [1.969]	3.62 [7.98] (3.68 [8.11])	3.85 [8.49] (3.91 [8.62])	4.14 [9.13] (4.20 [9.26])	4.15 [9.15] (4.21 [9.28])	4.01 [8.84] (4.07 [8.97])	4.01 [8.84] (4.07 [8.97])	4.71 [10.39] (4.77 [10.52])	3.88 [8.56] (3.94 [8.69])	0.00428 [0.00944] (0.00635 [0.01400])			0.34 [0.75]	0.21 [0.46]
63 [2.480]	5.68 [12.52] (5.76 [12.70])	6.06 [13.36] (6.14 [13.54])	6.53 [14.40] (6.61 [14.58])	7.28 [16.05] (7.36 [16.23])	6.21 [13.69] (6.29 [13.87])	6.16 [13.58] (6.24 [13.76])	6.86 [15.13] (6.94 [15.30])	6.10 [13.45] (6.18 [13.63])	0.00515 [0.01136] (0.00773 [0.01704])	0.04 [0.09]	0.06 [0.13]	0.34 [0.75]	0.21 [0.46]
80 [3.150]	8.97 [19.78] (9.14 [20.15])	9.44 [20.82] (9.61 [21.19])	10.25 [22.60] (10.42 [22.98])	11.19 [24.67] (11.36 [25.05])	10.57 [23.31] (10.74 [23.68])	9.89 [21.81] (10.06 [22.18])	10.61 [23.40] (10.78 [23.77])	10.05 [22.16] (10.22 [22.54])	0.00834 [0.01839] (0.01302 [0.02871])			0.87 [1.92]	0.62 [1.37]
100 [3.940]	14.69 [32.39] (14.90 [32.85])	15.25 [33.63] (15.46 [34.09])	16.36 [36.07] (16.57 [36.54])	17.56 [38.72] (17.77 [39.18])	16.91 [37.29] (17.12 [37.75])	15.93 [35.13] (16.14 [35.59])	16.65 [36.71] (16.86 [37.18])	16.08 [35.46] (16.29 [35.92])	0.01061 [0.02340] (0.01642 [0.03621])			1.47 [3.24]	1.24 [2.73]

Note: For lead wire length A (1000mm [39in.]).
Remark: Figures in parentheses ( ) are for steel tube specification.

Calculation example: For basic type with bore size of 50mm, and stroke of 100mm,
3.62＋(0.00428×100)＝4.048kg [8.924lb.]

●Double brake

kg [lb.]

Bore size mm [in.]	Zero stroke mass								Additional mass for each 1mm [0.0394in.] stroke	Mass of 1 sensor switch [with holder]		Mass of knuckle	
	Basic type	Foot mounting type	Axial foot mounting type	Rod side flange mounting type	Head side flange mounting type	Clevis mounting type (with pin)	Clevis mtg. type (w. supporting bkt.)	Pivot mtg. type		ZC□□□ CS□T Note	CS□F	Y type knuckle (with pin)	I type knuckle
40 [1.575]	3.32 [7.32] (3.36 [7.41])	3.49 [7.70] (3.53 [7.78])	3.62 [7.98] (3.66 [8.07])	3.71 [8.18] (3.75 [8.27])	3.69 [8.14] (3.73 [8.22])	3.59 [7.92] (3.63 [8.00])	4.29 [9.46] (4.33 [9.55])	3.50 [7.72] (3.54 [7.81])	0.00300 [0.00662] (0.00431 [0.00950])	0.04 [0.09]	0.05 [0.11]	0.27 [0.60]	0.16 [0.35]
50 [1.969]	4.44 [9.79] (4.50 [9.92])	4.67 [10.30] (4.73 [10.43])	4.96 [10.94] (5.02 [11.07])	4.97 [10.96] (5.03 [11.09])	4.83 [10.65] (4.89 [10.78])	4.83 [10.65] (4.89 [10.78])	5.53 [12.19] (5.59 [12.33])	4.70 [10.36] (4.76 [10.50])	0.00428 [0.00944] (0.00635 [0.01400])			0.34 [0.75]	0.21 [0.46]
63 [2.480]	6.93 [15.28] (7.01 [15.46])	7.31 [16.12] (7.39 [16.29])	7.78 [17.15] (7.86 [17.33])	8.53 [18.81] (8.61 [18.99])	7.46 [16.45] (7.54 [16.63])	7.41 [16.34] (7.49 [16.52])	8.11 [17.88] (8.19 [18.06])	7.35 [16.21] (7.43 [16.38])	0.00515 [0.01136] (0.00773 [0.01704])	0.04 [0.09]	0.06 [0.13]	0.34 [0.75]	0.21 [0.46]
80 [3.150]	11.15 [24.59] (11.32 [24.96])	11.62 [25.62] (11.79 [26.00])	12.43 [27.41] (12.60 [27.78])	13.37 [29.48] (13.54 [29.86])	12.75 [28.11] (12.92 [28.49])	12.07 [26.61] (12.24 [26.99])	12.79 [28.20] (12.96 [28.58])	12.23 [26.97] (12.40 [27.34])	0.00834 [0.01839] (0.01302 [0.02871])			0.87 [1.92]	0.62 [1.37]
100 [3.940]	19.32 [42.60] (19.53 [43.06])	19.88 [43.84] (20.09 [44.30])	20.99 [46.28] (21.20 [46.74])	22.19 [48.93] (22.40 [49.39])	21.54 [47.49] (21.75 [47.96])	20.56 [45.33] (20.79 [45.84])	21.28 [46.92] (21.49 [47.38])	20.71 [45.66] (20.92 [46.13])	0.01061 [0.02340] (0.01642 [0.03621])			1.47 [3.24]	1.24 [2.73]

Note: For lead wire length A (1000mm [39in.]).
Remark: Figures in parentheses ( ) are for steel tube specification.

Calculation example: For basic type with bore size of 50mm, and stroke of 100mm,
4.44＋(0.00428×100)＝4.868kg [10.732lb.]

Dimensions of Single Brake, Basic Type (mm)

DDAR Bore size × Stroke

CAD DDAR Bore size

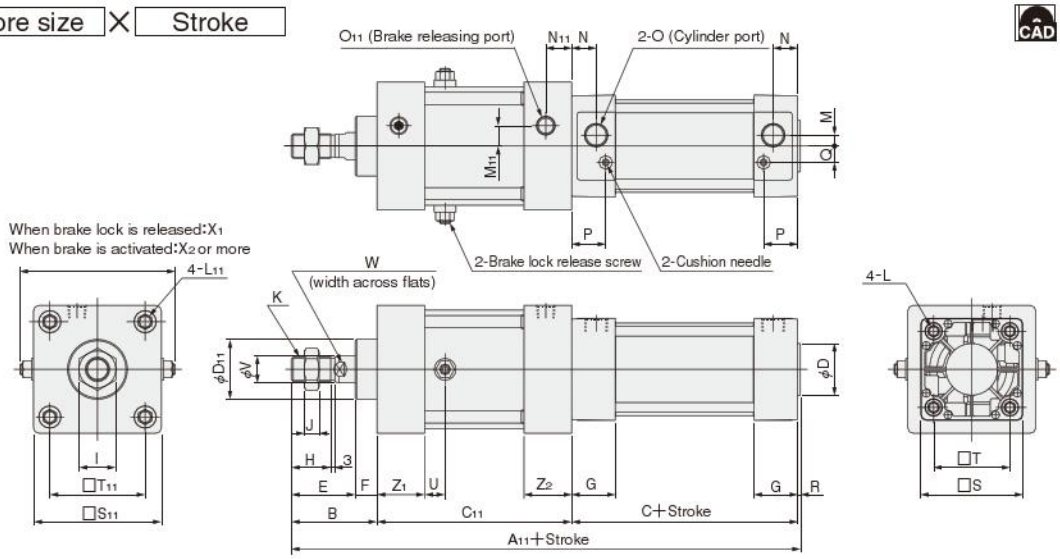

Code / Bore mm[in.]	A11	B	C	C11	D	D11	E	F	G	H	I	J	K	L	L11
40 [1.575]	272	49	93	128	32	38	39	10	31	21	22	8	M14×1.5	M6×1 Depth14	M6×1 Depth14
50 [1.969]	290	57	93	138	38	38	47	10	31	29	27	11	M18×1.5	M6×1 Depth14	M8×1.25 Depth14
63 [2.480]	304	63	96	143	38	44	47	16	32	29	27	11	M18×1.5	M8×1.25 Depth14	M10×1.5 Depth15
80 [3.150]	347	75	108	162	44	50	59	16	36	37	32	13	M22×1.5	M10×1.5 Depth15	M10×1.5 Depth15
100 [3.940]	361	75	108	176	50	60	59	16	36	37	36	14	M26×1.5	M10×1.5 Depth15	M12×1.75 Depth15

Code / Bore mm[in.]	M	M11	N	N11	O	O11	P	Q	R	S	S11	T	T11	U	V	W	X1	X2	Z1	Z2
40 [1.575]	4	6	18	17	Rc1/4	Rc1/4	25.5	10	2	50	62	37	47	12	16	14	88	94	27	28
50 [1.969]	7	11	18	17	Rc3/8	Rc1/4	24	12	2	62	75	47	56	14	20	17	97	104	30	30
63 [2.480]	8	15	18	22	Rc3/8	Rc1/4	25	12	2	75	94	56	70	15	20	17	114	122	35	35
80 [3.150]	11	15	20	24	Rc1/2	Rc3/8	29	16	2	94	112	70	84	18	25	21	134	142	35	39
100 [3.940]	12	15	20	24	Rc1/2	Rc3/8	29	18	2	112	138	84	104	17	30	26	159	166	36	39

Dimensions of Single Brake, Foot Mounting Type (mm)

DDAR Bore size × Stroke **-1**

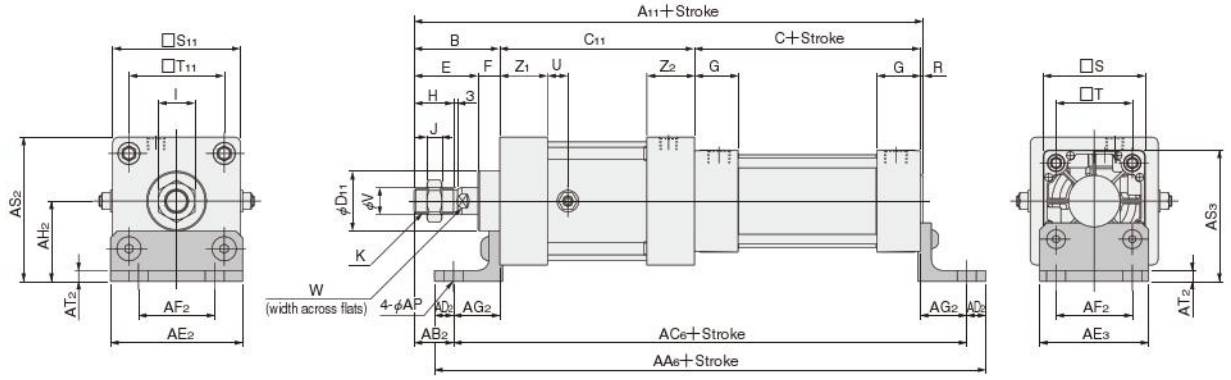

Bore mm [in.] \ Code	A11	B	C	C11	D11	E	F	G	H	I	J	K
40 [1.575]	272	49	93	128	38	39	10	31	21	22	8	M14×1.5
50 [1.969]	290	57	93	138	38	47	10	31	29	27	11	M18×1.5
63 [2.480]	304	63	96	143	44	47	16	32	29	27	11	M18×1.5
80 [3.150]	347	75	108	162	50	59	16	36	37	32	13	M22×1.5
100 [3.940]	361	75	108	176	60	59	16	36	37	36	14	M26×1.5

Bore mm [in.] \ Code	R	S	S11	T	T11	U	V	W	Z1	Z2	AA6	AB2	AC6	AD2	AE2	AE3	AF2	AG2	AH2	AP	AS2	AS3	AT2
40 [1.575]	2	50	62	37	47	12	16	14	27	28	297	23	273	12	70	60	37	26	41	12	72	66	6
50 [1.969]	2	62	75	47	56	14	20	17	30	30	311	29	287	12	80	70	47	28	48	12	85.5	79	6
63 [2.480]	2	75	94	56	70	15	20	17	35	35	335	29	307	14	97	80	56	34	59	14	106	96.5	8
80 [3.150]	2	94	112	70	84	18	25	21	35	39	366	41	338	14	114	97	70	34	66	14	122	113	8
100 [3.940]	2	112	138	84	104	17	30	26	36	39	406	32	370	18	138	114	84	43	79	14	148	135	10

Dimensions of Single Brake, Axial Foot Mounting Type (mm)

DDAR Bore size × Stroke **-2**

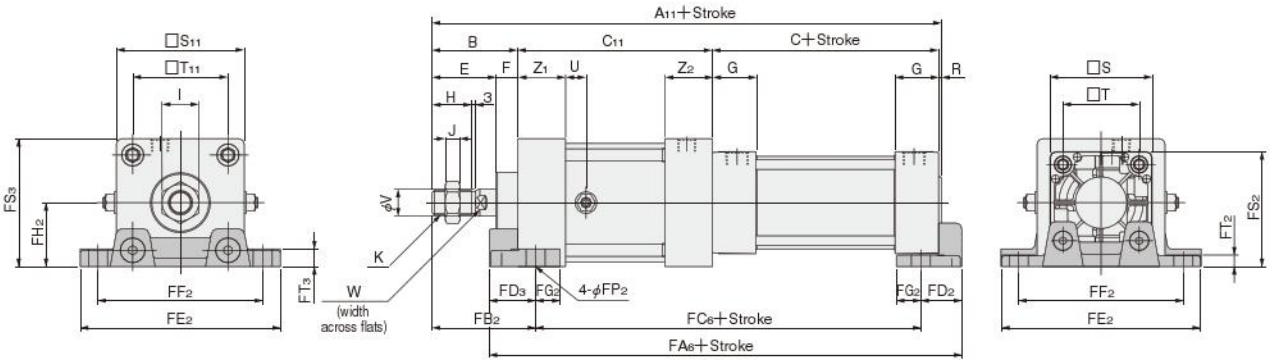

Bore mm [in.] \ Code	A11	B	C	C11	E	F	G	H	I	J	K	R
40 [1.575]	272	49	93	128	39	10	31	21	22	8	M14×1.5	2
50 [1.969]	290	57	93	138	47	10	31	29	27	11	M18×1.5	2
63 [2.480]	304	63	96	143	47	16	32	29	27	11	M18×1.5	2
80 [3.150]	347	75	108	162	59	16	36	37	32	13	M22×1.5	2
100 [3.940]	361	75	108	176	59	16	36	37	36	14	M26×1.5	2

Bore mm [in.] \ Code	S	S11	T	T11	U	V	W	Z1	Z2	FA6	FB2	FC6	FD2	FD3	FE2	FF2	FG2	FH2	FP2	FS2	FS3	FT2	FT3
40 [1.575]	50	62	37	47	12	16	14	27	28	248	59	201	22	25	105	83	14	31	12	56	62	5.5	9
50 [1.969]	62	75	47	56	14	20	17	30	30	262	67	211	24	27	117	95	14	38	12	69	75.5	6.5	9
63 [2.480]	75	94	56	70	15	20	17	35	35	276	76	213	29	34	147	121	18	47	14	84.5	94	8.5	13
80 [3.150]	94	112	70	84	18	25	21	35	39	315	88	244	33	38	168	140	18	57	14	104	113	9.5	14
100 [3.940]	112	138	84	104	17	30	26	36	39	336	89	257	37	42	195	167	18	69	14	125	138	11.5	16

Dimensions of Single Brake, Rod Side Flange Mounting Type (mm)

DDAR Bore size × Stroke **-3**

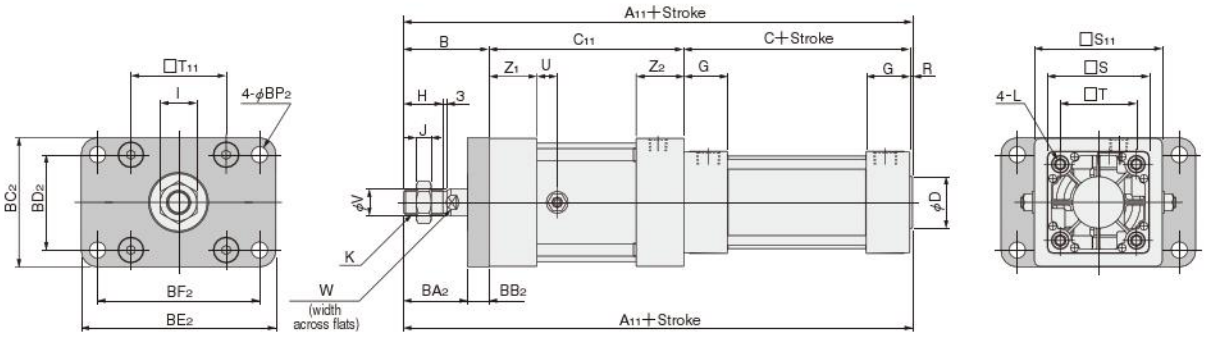

Bore mm[in.] \ Code	A11	B	C	C11	D	G	H	I	J	K	L
40 [1.575]	272	49	93	128	32	31	21	22	8	M14×1.5	M6×1 Depth 14
50 [1.969]	290	57	93	138	38	31	29	27	11	M18×1.5	M6×1 Depth 14
63 [2.480]	304	63	96	143	38	32	29	27	11	M18×1.5	M8×1.25 Depth 14
80 [3.150]	347	75	108	162	44	36	37	32	13	M22×1.5	M10×1.5 Depth 15
100 [3.940]	361	75	108	176	50	36	37	36	14	M26×1.5	M10×1.5 Depth 15

Bore mm[in.] \ Code	R	S	S11	T	T11	U	V	W	Z1	Z2	BA2	BB2	BC2	BD2	BE2	BF2	BP2
40 [1.575]	2	50	62	37	47	12	16	14	27	28	39	10	65	47	104	86	9
50 [1.969]	2	62	75	47	56	14	20	17	30	30	47	10	76	56	116	98	9
63 [2.480]	2	75	94	56	70	15	20	17	35	35	47	16	95	70	143	119	12
80 [3.150]	2	94	112	70	84	18	25	21	35	39	59	16	115	84	162	138	12
100 [3.940]	2	112	138	84	104	17	30	26	36	39	59	16	138	104	196	168	14

Dimensions of Single Brake, Head Side Flange Mounting Type (mm)

DDAR Bore size × Stroke **-5**

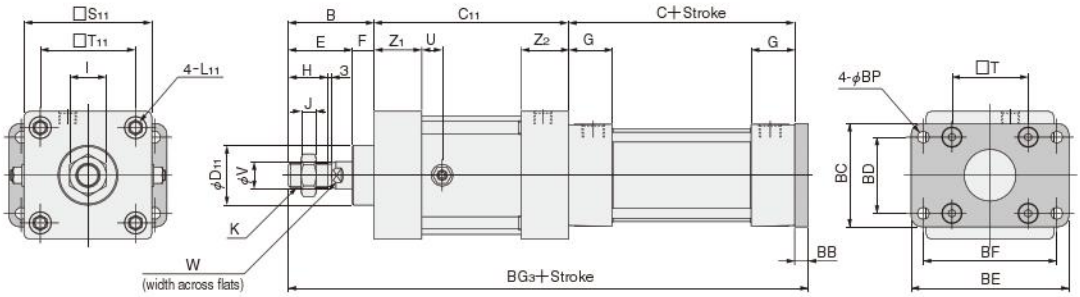

Bore mm[in.] \ Code	B	C	C11	D11	E	F	G	H	I	J	K	L11
40 [1.575]	49	93	128	38	39	10	31	21	22	8	M14×1.5	M6×1 Depth 14
50 [1.969]	57	93	138	38	47	10	31	29	27	11	M18×1.5	M8×1.25 Depth 14
63 [2.480]	63	96	143	44	47	16	32	29	27	11	M18×1.5	M10×1.5 Depth 15
80 [3.150]	75	108	162	50	59	16	36	37	32	13	M22×1.5	M10×1.5 Depth 15
100 [3.940]	75	108	176	60	59	16	36	37	36	14	M26×1.5	M12×1.75 Depth 15

Bore mm[in.] \ Code	S11	T	T11	U	V	W	Z1	Z2	BB	BC	BD	BE	BF	BG3	BP
40 [1.575]	62	37	47	12	16	14	27	28	10	52	36	84	70	280	7
50 [1.969]	75	47	56	14	20	17	30	30	10	65	47	104	86	298	9
63 [2.480]	94	56	70	15	20	17	35	35	10	76	56	116	98	312	9
80 [3.150]	112	70	84	18	25	21	35	39	16	95	70	143	119	361	12
100 [3.940]	138	84	104	17	30	26	36	39	16	115	84	162	138	375	12

Dimensions of Single Brake, Clevis Mounting Type (mm)

DDAR Bore size × Stroke **-7**

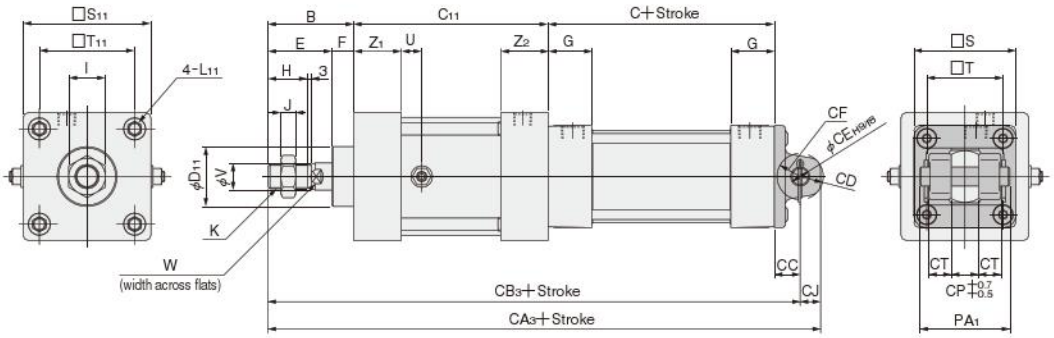

Bore mm [in.] / Code	B	C	C11	D11	E	F	G	H	I	J	K	L11
40 [1.575]	49	93	128	38	39	10	31	21	22	8	M14×1.5	M6×1 Depth 14
50 [1.969]	57	93	138	38	47	10	31	29	27	11	M18×1.5	M8×1.25 Depth 14
63 [2.480]	63	96	143	44	47	16	32	29	27	11	M18×1.5	M10×1.5 Depth 15
80 [3.150]	75	108	162	50	59	16	36	37	32	13	M22×1.5	M10×1.5 Depth 15
100 [3.940]	75	108	176	60	59	16	36	37	36	14	M26×1.5	M12×1.75 Depth 15

Bore mm [in.] / Code	S	S11	T	T11	U	V	W	Z1	Z2	CA3	CB3	CC	CD	CE	CF	CJ	CP	CT	PA1
40 [1.575]	50	62	37	47	12	16	14	27	28	302	289	19	R15	14	R17	13	20	12.5	58
50 [1.969]	62	75	47	56	14	20	17	30	30	322	307	19	R17	14	R17	15	20	16.5	66
63 [2.480]	75	94	56	70	15	20	17	35	35	336	321	19	R17	14	R17	15	20	16.5	66
80 [3.150]	94	112	70	84	18	25	21	35	39	398	377	32	R24	20	R30	21	32	17.5	78
100 [3.940]	112	138	84	104	17	30	26	36	39	412	391	32	R24	20	R30	21	32	17.5	78

●With Supporting Bracket DDAR Bore size × Stroke -7-7C

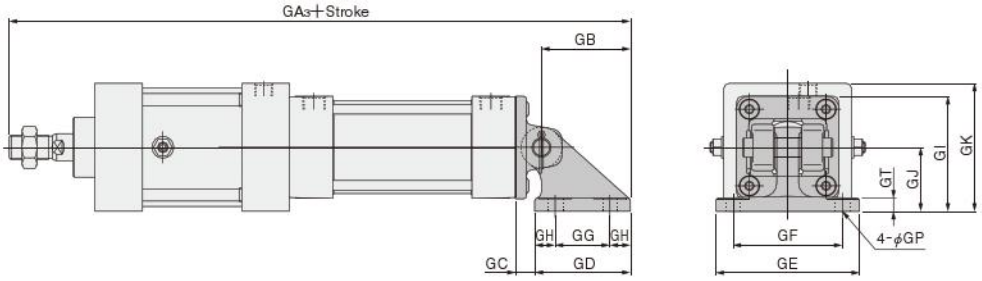

Bore mm [in.] / Code	GA3	GB	GC	GD	GE	GF	GG	GH	GI	GJ	GK	GP	GT
40 [1.575]	355.5	66.5	12.5	73	105	80	40	16.5	70	45	76	11(Thru hole)	8
50 [1.969]	373.5	66.5	12.5	73	105	80	40	16.5	76	45	82.5	11(Thru hole)	8
63 [2.480]	387.5	66.5	12.5	73	105	80	40	16.5	82.5	45	92	11(Thru hole)	8
80 [3.150]	463.5	86.5	20.5	98	135	105	65	16.5	107	60	116	14(Thru hole)	12
100 [3.940]	477.5	86.5	20.5	98	135	105	65	16.5	116	60	129	14(Thru hole)	12

Dimensions of Single Brake, Pivot Mounting Type (mm)

DDAR Bore size × Stroke **-8**

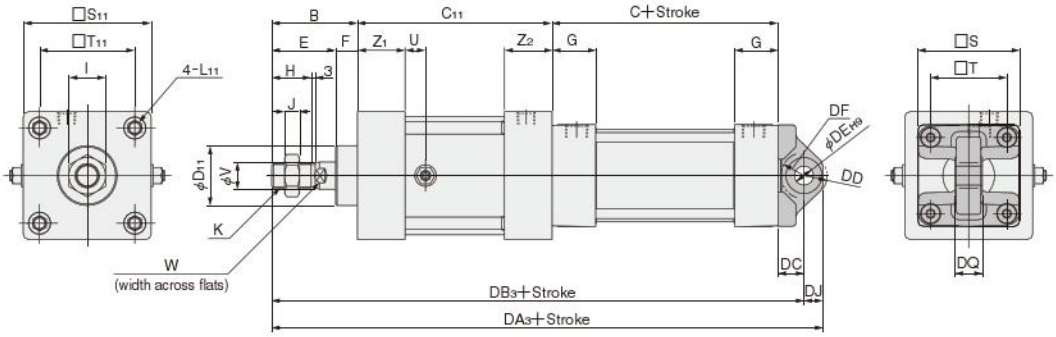

Bore mm[in] \ Code	B	C	C11	D11	E	F	G	H	I	J	K	L11
40 [1.575]	49	93	128	38	39	10	31	21	22	8	M14×1.5	M6×1 Depth 14
50 [1.969]	57	93	138	38	47	10	31	29	27	11	M18×1.5	M8×1.25 Depth 14
63 [2.480]	63	96	143	44	47	16	32	29	27	11	M18×1.5	M10×1.5 Depth 15
80 [3.150]	75	108	162	50	59	16	36	37	32	13	M22×1.5	M10×1.5 Depth 15
100 [3.940]	75	108	176	60	59	16	36	37	36	14	M26×1.5	M12×1.75 Depth 15

Bore mm[in] \ Code	S	S11	T	T11	U	V	W	Z1	Z2	DA3	DB3	DC	DD	DE	DF	DJ	DQ
40 [1.575]	50	62	37	47	12	16	14	27	28	303	289	19	R17	14	R17	14	$20^{0}_{-0.084}$
50 [1.969]	62	75	47	56	14	20	17	30	30	321	307	19	R17	14	R17	14	$20^{0}_{-0.084}$
63 [2.480]	75	94	56	70	15	20	17	35	35	335	321	19	R17	14	R17	14	$20^{0}_{-0.084}$
80 [3.150]	94	112	70	84	18	25	21	35	39	398	377	32	R24	20	R25	21	$32^{0}_{-0.100}$
100 [3.940]	112	138	84	104	17	30	26	36	39	411	391	32	R24	20	R26	20	$32^{0}_{-0.100}$

Dimensions of Double Brake, Basic Type (mm)

DDARR Bore size × Stroke

CAD DDARR Bore size

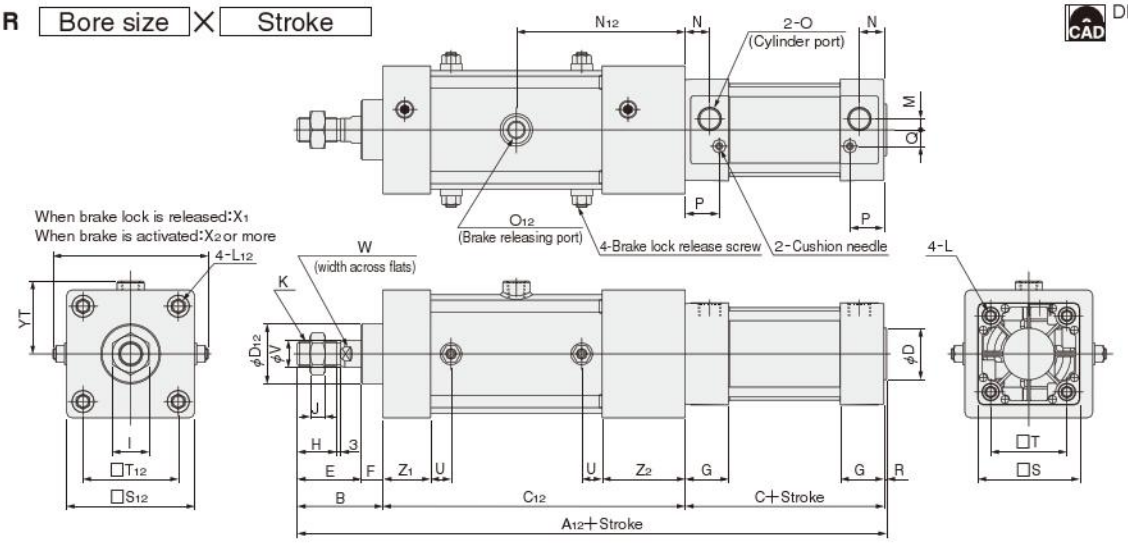

Bore mm [in.] \ Code	A12	B	C	C12	D	D12	E	F	G	H	I	J	K	L	L12
40 [1.575]	350	49	93	206	32	38	39	10	31	21	22	8	M14×1.5	M6×1 Depth14	M6×1 Depth14
50 [1.969]	374	57	93	222	38	38	47	10	31	29	27	11	M18×1.5	M6×1 Depth14	M8×1.25 Depth14
63 [2.480]	383	63	96	222	38	44	47	16	32	29	27	11	M18×1.5	M8×1.25 Depth14	M10×1.5 Depth15
80 [3.150]	439	75	108	254	44	50	59	16	36	37	32	13	M22×1.5	M10×1.5 Depth15	M10×1.5 Depth15
100 [3.940]	467	75	108	282	50	60	59	16	36	37	36	14	M26×1.5	M10×1.5 Depth15	M12×1.75 Depth15

Bore mm [in.] \ Code	M	N	N12	O	O12	P	Q	R	S	S12	T	T12	U	V	W	X1	X2	YT	Z1	Z2
40 [1.575]	4	18	116	Rc1/4	Rc1/4	25.5	10	2	50	62	37	47	12	16	14	88	94	37.5	27	53
50 [1.969]	7	18	124	Rc3/8	Rc1/4	24	12	2	62	75	47	56	14	20	17	97	104	44	30	56
63 [2.480]	8	18	124	Rc3/8	Rc1/4	25	12	2	75	94	56	70	15	20	17	114	122	53.5	35	61
80 [3.150]	11	20	143	Rc1/2	Rc3/8	29	16	2	94	112	70	84	18	25	21	134	142	68.5	35	67
100 [3.940]	12	20	157	Rc1/2	Rc3/8	29	18	2	112	138	84	104	17	30	26	159	166	82	36	68

Dimensions of Double Brake, Foot Mounting Type (mm)

DDARR Bore size × Stroke **-1**

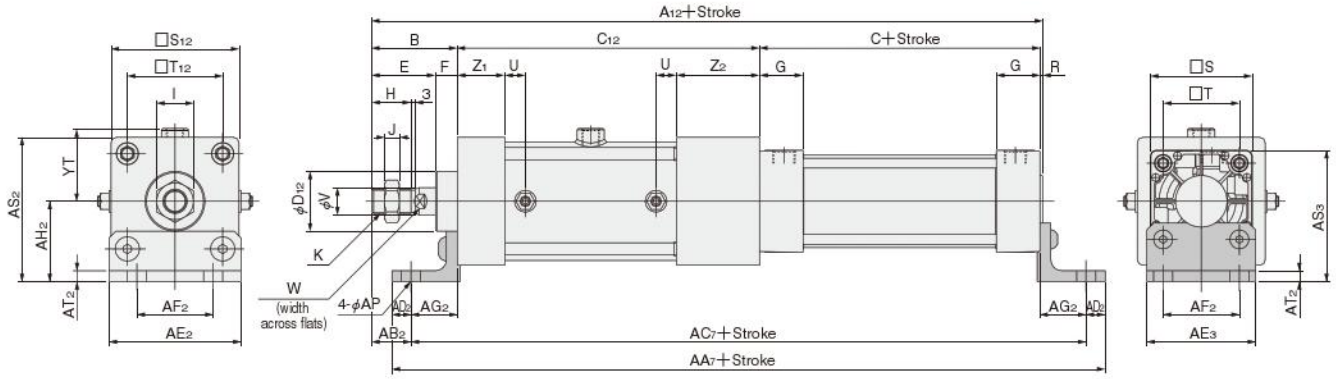

Bore mm[in.] \ Code	A12	B	C	C12	D12	E	F	G	H	I	J	K	R
40 [1.575]	350	49	93	206	38	39	10	31	21	22	8	M14×1.5	2
50 [1.969]	374	57	93	222	38	47	10	31	29	27	11	M18×1.5	2
63 [2.480]	383	63	96	222	44	47	16	32	29	27	11	M18×1.5	2
80 [3.150]	439	75	108	254	50	59	16	36	37	32	13	M22×1.5	2
100 [3.940]	467	75	108	282	60	59	16	36	37	36	14	M26×1.5	2

Bore mm[in.] \ Code	S	S12	T	T12	U	V	W	YT	Z1	Z2	AA7	AB2	AC7	AD2	AE2	AE3	AF2	AG2	AH2	AP	AS2	AS3	AT2
40 [1.575]	50	62	37	47	12	16	14	37.5	27	53	375	23	351	12	70	60	37	26	41	12	72	66	6
50 [1.969]	62	75	47	56	14	20	17	44	30	56	395	29	371	12	80	70	47	28	48	12	85.5	79	6
63 [2.480]	75	94	56	70	15	20	17	53.5	35	61	414	29	386	14	97	80	56	34	59	14	106	96.5	8
80 [3.150]	94	112	70	84	18	25	21	68.5	35	67	458	41	430	14	114	97	70	34	66	14	122	113	8
100 [3.940]	112	138	84	104	17	30	26	82	36	68	512	32	476	18	138	114	84	43	79	14	148	135	10

Dimensions of Double Brake, Axial Foot Mounting Type (mm)

DDARR Bore size × Stroke **-2**

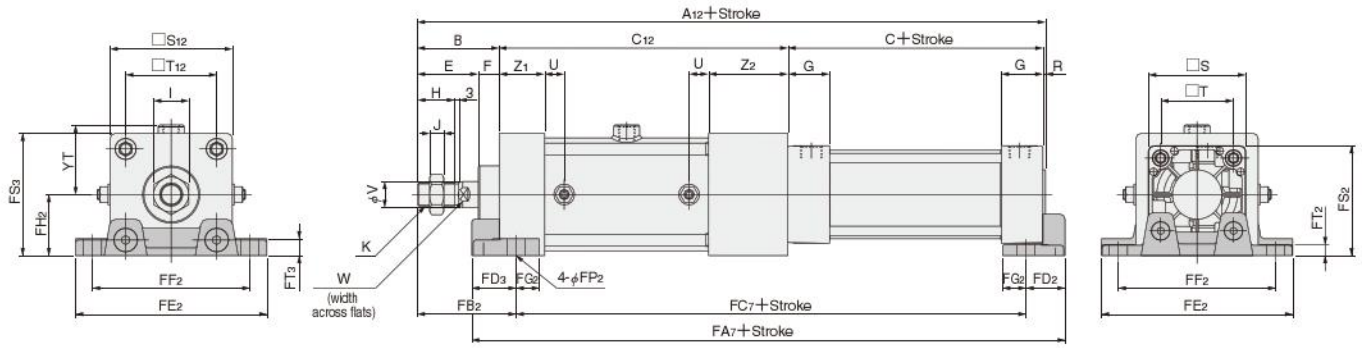

Bore mm[in.] \ Code	A12	B	C	C12	E	F	G	H	I	J	K	R	S
40 [1.575]	350	49	93	206	39	10	31	21	22	8	M14×1.5	2	50
50 [1.969]	374	57	93	222	47	10	31	29	27	11	M18×1.5	2	62
63 [2.480]	383	63	96	222	47	16	32	29	27	11	M18×1.5	2	75
80 [3.150]	439	75	108	254	59	16	36	37	32	13	M22×1.5	2	94
100 [3.940]	467	75	108	282	59	16	36	37	36	14	M26×1.5	2	112

Bore mm[in.] \ Code	S12	T	T12	U	V	W	YT	Z1	Z2	FA7	FB2	FC7	FD2	FD3	FE2	FF2	FG2	FH2	FP2	FS2	FS3	FT2	FT3
40 [1.575]	62	37	47	12	16	14	37.5	27	53	326	59	279	22	25	105	83	14	31	12	56	62	5.5	9
50 [1.969]	75	47	56	14	20	17	44	30	56	346	67	295	24	27	117	95	14	38	12	69	75.5	6.5	9
63 [2.480]	94	56	70	15	20	17	53.5	35	61	355	76	292	29	34	147	121	18	47	14	84.5	94	8.5	13
80 [3.150]	112	70	84	18	25	21	68.5	35	67	407	88	336	33	38	168	140	18	57	14	104	113	9.5	14
100 [3.940]	138	84	104	17	30	26	82	36	68	442	89	363	37	42	195	167	18	69	14	125	138	11.5	16

Dimensions of Double Brake, Rod Side Flange Mounting Type (mm)

DDARR Bore size × Stroke **-3**

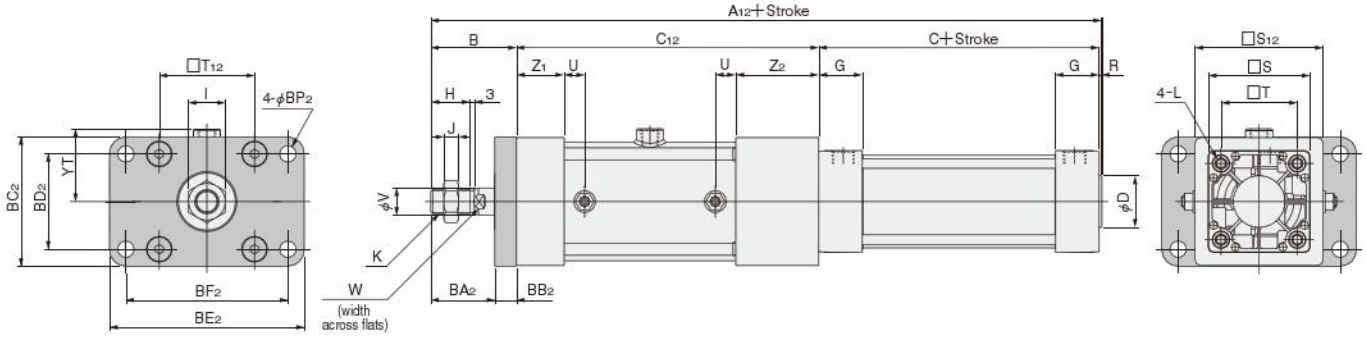

Bore mm [in.] \ Code	A12	B	C	C12	D	G	H	I	J	K	L
40 [1.575]	350	49	93	206	32	31	21	22	8	M14×1.5	M6×1 Depth 14
50 [1.969]	374	57	93	222	38	31	29	27	11	M18×1.5	M6×1 Depth 14
63 [2.480]	383	63	96	222	38	32	29	27	11	M18×1.5	M8×1.25 Depth 14
80 [3.150]	439	75	108	254	44	36	37	32	13	M22×1.5	M10×1.5 Depth 15
100 [3.940]	467	75	108	282	50	36	37	36	14	M26×1.5	M10×1.5 Depth 15

Bore mm [in.] \ Code	R	S	S12	T	T12	U	V	W	YT	Z1	Z2	BA2	BB2	BC2	BD2	BE2	BF2	BP2
40 [1.575]	2	50	62	37	47	12	16	14	37.5	27	53	39	10	65	47	104	86	9
50 [1.969]	2	62	75	47	56	14	20	17	44	30	56	47	10	76	56	116	98	9
63 [2.480]	2	75	94	56	70	15	20	17	53.5	35	61	47	16	95	70	143	119	12
80 [3.150]	2	94	112	70	84	18	25	21	68.5	35	67	59	16	115	84	162	138	12
100 [3.940]	2	112	138	84	104	17	30	26	82	36	68	59	16	138	104	196	168	14

Dimensions of Double Brake, Head Side Flange Mounting Type (mm)

DDARR Bore size × Stroke **-5**

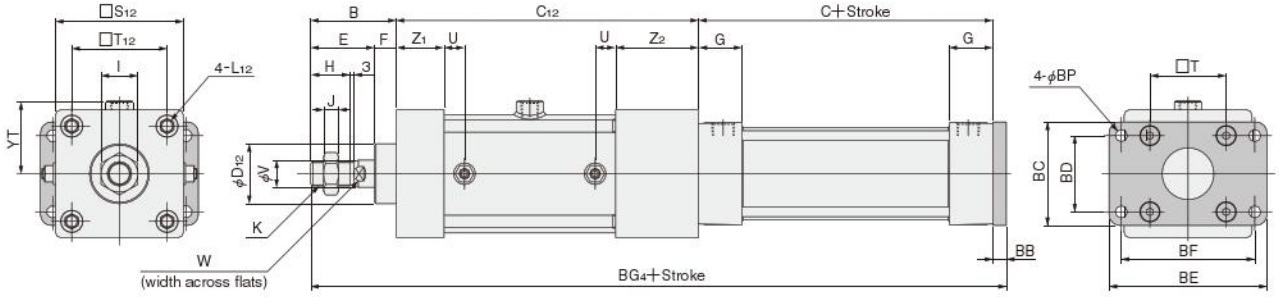

Bore mm [in.] \ Code	B	C	C12	D12	E	F	G	H	I	J	K	L12
40 [1.575]	49	93	206	38	39	10	31	21	22	8	M14×1.5	M6×1 Depth 14
50 [1.969]	57	93	222	38	47	10	31	29	27	11	M18×1.5	M8×1.25 Depth 14
63 [2.480]	63	96	222	44	47	16	32	29	27	11	M18×1.5	M10×1.5 Depth 15
80 [3.150]	75	108	254	50	59	16	36	37	32	13	M22×1.5	M10×1.5 Depth 15
100 [3.940]	75	108	282	60	59	16	36	37	36	14	M26×1.5	M12×1.75 Depth 15

Bore mm [in.] \ Code	S12	T	T12	U	V	W	YT	Z1	Z2	BB	BC	BD	BE	BF	BG4	BP
40 [1.575]	62	37	47	12	16	14	37.5	27	53	10	52	36	84	70	358	7
50 [1.969]	75	47	56	14	20	17	44	30	56	10	65	47	104	86	382	9
63 [2.480]	94	56	70	15	20	17	53.5	35	61	10	76	56	116	98	391	9
80 [3.150]	112	70	84	18	25	21	68.5	35	67	16	95	70	143	119	453	12
100 [3.940]	138	84	104	17	30	26	82	36	68	16	115	84	162	138	481	12

Dimensions of Double Brake, Clevis Mounting Type (mm)

DDARR Bore size × Stroke **-7**

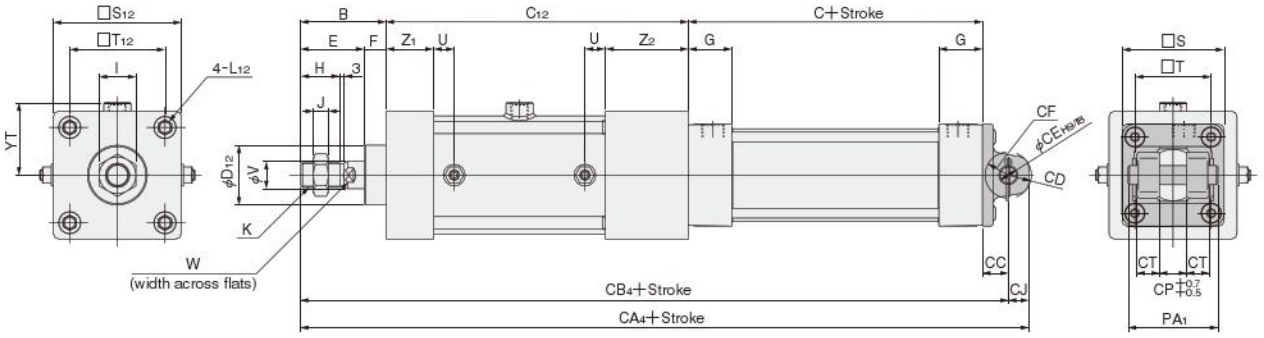

Bore mm[in.] / Code	B	C	C12	D12	E	F	G	H	I	J	K	L12
40 [1.575]	49	93	206	38	39	10	31	21	22	8	M14×1.5	M6×1 Depth 14
50 [1.969]	57	93	222	38	47	10	31	29	27	11	M18×1.5	M8×1.25 Depth 14
63 [2.480]	63	96	222	44	47	16	32	29	27	11	M18×1.5	M10×1.5 Depth 15
80 [3.150]	75	108	254	50	59	16	36	37	32	13	M22×1.5	M10×1.5 Depth 15
100 [3.940]	75	108	282	60	59	16	36	37	36	14	M26×1.5	M12×1.75 Depth 15

Bore mm[in.] / Code	S	S12	T	T12	U	V	W	YT	Z1	Z2	CA4	CB4	CC	CD	CE	CF	CJ	CP	CT	PA1
40 [1.575]	50	62	37	47	12	16	14	37.5	27	53	380	367	19	R15	14	R17	13	20	12.5	58
50 [1.969]	62	75	47	56	14	20	17	44	30	56	406	391	19	R17	14	R17	15	20	16.5	66
63 [2.480]	75	94	56	70	15	20	17	53.5	35	61	415	400	19	R17	14	R17	15	20	16.5	66
80 [3.150]	94	112	70	84	18	25	21	68.5	35	67	490	469	32	R24	20	R30	21	32	17.5	78
100 [3.940]	112	138	84	104	17	30	26	82	36	68	518	497	32	R24	20	R30	21	32	17.5	78

●With Supporting Bracket **DDARR** Bore size × Stroke **-7-7C**

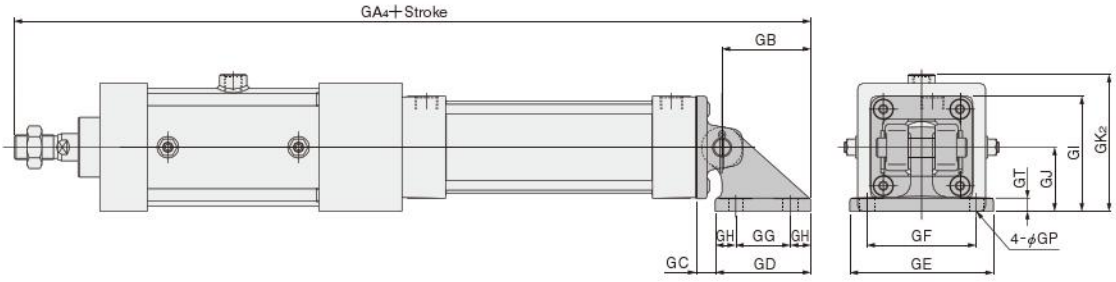

Bore mm[in.] / Code	GA4	GB	GC	GD	GE	GF	GG	GH	GI	GJ	GK2	GP	GT
40 [1.575]	433.5	66.5	12.5	73	105	80	40	16.5	70	45	82.5	11(Thru hole)	8
50 [1.969]	457.5	66.5	12.5	73	105	80	40	16.5	76	45	89	11(Thru hole)	8
63 [2.480]	466.5	66.5	12.5	73	105	80	40	16.5	82.5	45	98.5	11(Thru hole)	8
80 [3.150]	555.5	86.5	20.5	98	135	105	65	16.5	107	60	128.5	14(Thru hole)	12
100 [3.940]	583.5	86.5	20.5	98	135	105	65	16.5	116	60	142	14(Thru hole)	12

Dimensions of Double Brake, Pivot Mounting Type (mm)

DDARR Bore size × Stroke **-8**

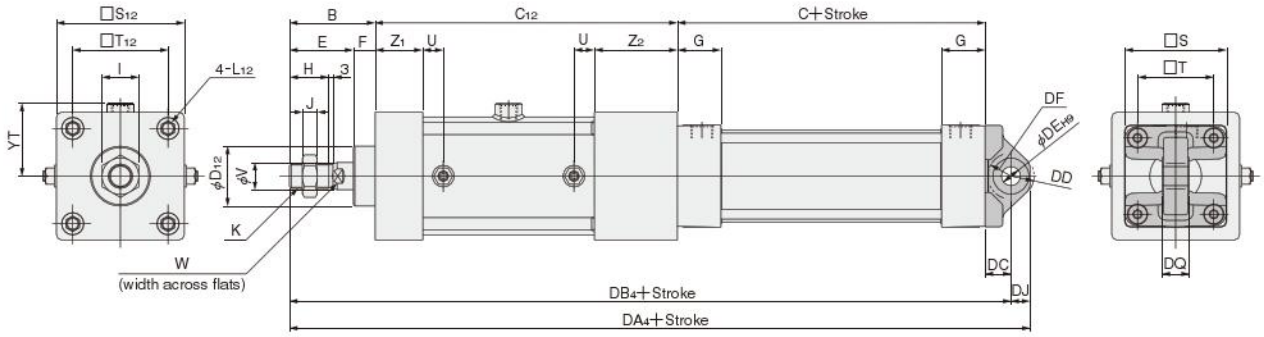

Bore mm [in.] \ Code	B	C	C_{12}	D_{12}	E	F	G	H	I	J	K	L_{12}
40 [1.575]	49	93	206	38	39	10	31	21	22	8	M14×1.5	M6×1 Depth 14
50 [1.969]	57	93	222	38	47	10	31	29	27	11	M18×1.5	M8×1.25 Depth 14
63 [2.480]	63	96	222	44	47	16	32	29	27	11	M18×1.5	M10×1.5 Depth 15
80 [3.150]	75	108	254	50	59	16	36	37	32	13	M22×1.5	M10×1.5 Depth 15
100 [3.940]	75	108	282	60	59	16	36	37	36	14	M26×1.5	M12×1.75 Depth 15

Bore mm [in.] \ Code	S	S_{12}	T	T_{12}	U	V	W	YT	Z_1	Z_2	DA_4	DB_4	DC	DD	DE	DF	DJ	DQ
40 [1.575]	50	62	37	47	12	16	14	37.5	27	53	381	367	19	R17	14	R17	14	$20^{0}_{-0.084}$
50 [1.969]	62	75	47	56	14	20	17	44	30	56	405	391	19	R17	14	R17	14	$20^{0}_{-0.084}$
63 [2.480]	75	94	56	70	15	20	17	53.5	35	61	414	400	19	R17	14	R17	14	$20^{0}_{-0.084}$
80 [3.150]	94	112	70	84	18	25	21	68.5	35	67	490	469	32	R24	20	R25	21	$32^{0}_{-0.100}$
100 [3.940]	112	138	84	104	17	30	26	82	36	68	517	497	32	R24	20	R26	20	$32^{0}_{-0.100}$

SENSOR SWITCHES

Symbol

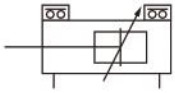

Order Codes

●Without mounting holder — **ZC130** **A**

●With mounting holder — **ZC130** **A** – **NDDA** **40**

Sensor switch model
- **ZC130** — 2-lead wire Solid state type with indicator lamp DC10～28V
- **ZC153** — 3-lead wire Solid state type with indicator lamp DC4.5～28V
- **CS5T** — 2-lead wire Reed switch type without indicator lamp DC5～28V, AC85～115V
- **CS11T** — 2-lead wire Reed switch type with indicator lamp DC10～28V
- **CS2F** — DIN connector Reed switch type with indicator lamp AC85～230V
- **CS3F** — DIN connector Reed switch type with indicator lamp DC10～30V
- **CS4F** — DIN connector Reed switch type with indicator lamp DC10～30V
- **CS5F** — DIN connector Reed switch type without indicator lamp DC3～30V

Lead wire length
(Applicable to other than **CS□F** only)
- **A** — 1000mm [39in.]
- **B** — 3000mm [118in.]

NDDA: Applicable to other than **CS□F**
NDF : Applicable to **CS□F** only

Bore size

●For details of sensor switches, see p.1544.

●**Order codes for mounting holders only**

C1 – **NDDA** **40**

Sensor type
- **C1**: Solid state type for **ZC1□□**
  Reed switch type for **CS□T**
- **DF**: Reed switch type for **CS□F**

NDDA: Applicable to other than **CS□F**
Blank : For **CS□F**

Bore size
- **32** — For ϕ 32 [1.260in.]
- **40** — For ϕ 40 [1.575in.]
- **50** — For ϕ 50 [1.969in.]
- **63** — For ϕ 63 [2.480in.]
- **80** — For ϕ 80 [3.150in.]
- **100** — For ϕ 100 [3.940in.]
- **125** — For ϕ 125 [4.921in.]

Sensor Switches and Mounting Holders

●DYNA cylinder sensor switches come in 2 types, and 2 corresponding types of mounting holders are available.
See the following for details.

Solid state type	**ZC130□□** **ZC153□□**
Reed switch type	**CS5T□** **CS11T□**

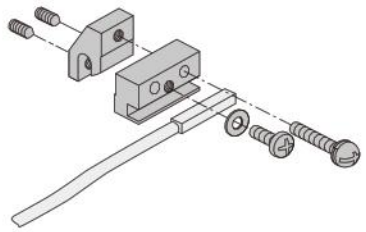

DIN connector	**CS2F** **CS3F** **CS4F** **CS5F**

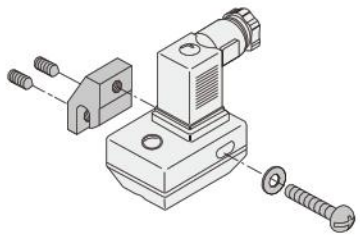

Minimum Cylinder Strokes When Using Sensor Switches

mm

Sensor switch model		Bore size mm [in.]	2pcs. mounting				1pc. mounting	
			Mounting 2 pcs. on a tie rod		Mounting 1 pc. on each tie rod		Rod side	Head side
			In a straight line	In staggered positions	1-plane mounting	2-plane mounting		
Solid state type	ZC130 ZC153	**32 [1.260]**	55 (90)	15 (90)	48 (90)	15 (90)	15 (90)	15 (66)
		40 [1.575]	55 (90)	15 (90)	48 (90)	15 (90)	15 (90)	15 (66)
		50 [1.969]	55 (90)	15 (90)	15 (90)	15 (90)	15 (90)	15 (66)
		63 [2.480]	58 (93)	15 (93)	15 (93)	15 (93)	15 (93)	15 (63)
		80 [3.150]	58 (99)	15 (99)	15 (99)	15 (99)	15 (99)	15 (69)
		100 [3.940]	58 (99)	15 (99)	15 (99)	15 (99)	15 (99)	15 (69)
		125 [4.921]	58 (99)	15 (99)	15 (99)	15 (99)	15 (99)	15 (69)
Reed switch type	CS5T CS11T	**32 [1.260]**	55 (90)	15 (90)	48 (90)	15 (90)	15 (90)	15 (66)
		40 [1.575]	55 (90)	15 (90)	48 (90)	15 (90)	15 (90)	15 (66)
		50 [1.969]	55 (90)	15 (90)	15 (90)	15 (90)	15 (90)	15 (66)
		63 [2.480]	58 (93)	15 (93)	15 (93)	15 (93)	15 (93)	15 (63)
		80 [3.150]	58 (99)	15 (99)	15 (99)	15 (99)	15 (99)	15 (69)
		100 [3.940]	58 (99)	15 (99)	15 (99)	15 (99)	15 (99)	15 (69)
		125 [4.921]	58 (99)	15 (99)	15 (99)	15 (99)	15 (99)	15 (69)
	CS□F	**32 [1.260]**	55 (93)	33 (93)	55 (93)	25 (93)	20 (93)	20 (77)
		40 [1.575]	55 (93)	33 (93)	55 (93)	25 (93)	20 (93)	20 (77)
		50 [1.969]	55 (93)	33 (93)	55 (93)	25 (93)	20 (93)	20 (77)
		63 [2.480]	55 (96)	33 (96)	55 (96)	25 (96)	20 (96)	20 (74)
		80 [3.150]	55 (101)	33 (101)	25 (101)		20 (101)	20 (79)
		100 [3.940]	55 (99)	33 (106)	25 (106)		20 (106)	20 (84)
		125 [4.921]	55 (99)	33 (106)	25 (106)		20 (106)	20 (84)

Remark: Figures in parentheses ( ) are for trunnion type.

●When mounting 2 sensors on a tie rod

When mounted in a straight line

When mounted in staggered positions

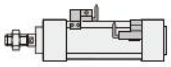

●When mounting 1 sensor on each tie rod

When mounted on 1 plane

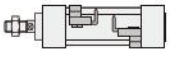

When mounted on 2 planes

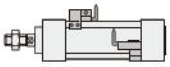

●1pc. mounting

Rod side

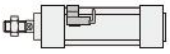

Head side

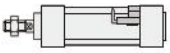

●Mounting on trunnion type

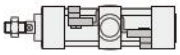

Sensor Switch Operating Range, Response Differential, and Maximum Sensing Location

●ZC1□□type, CS□T type, CS□F type

●Operating range: ℓ

The distance the piston travels in one direction, while the switch is in the ON position.

●Response differential: C

The distance between the point where the piston turns the switch ON and the point where the switch is turned OFF as the piston travels in the opposite direction.

mm [in.]

Sensor switches model	Solid state type	Reed switch type		
	ZC130, ZC153	CS5T	CS11T	CS□F
Operating range: ℓ	2～6 [0.079～0.236]	6～15 [0.236～0.591]		
Response differential: C	1.5 [0.059] MAX.	2.5 [0.098] MAX.		
Maximum sensing location	8.5 [0.335]	7 [0.276]	10.5 [0.413]	16 [0.630]

Notes: 1. Figures in the grommet type are lengths measured from the switch's opposite end side to the lead wire, while the figures in connector type are lengths measured from the connector side's end surface.
2. The above table shows reference values.

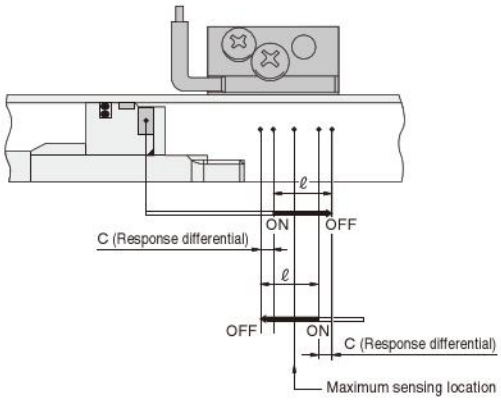

Mounting Location of Sensor Switch

When the sensor switch is mounted in the locations shown in the diagram (figures in the table are reference values), the magnet comes to the sensor switch's maximum sensing location at the end of the stroke.

●Grommet type

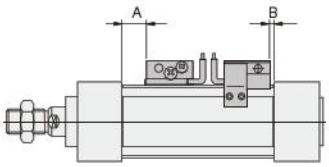

●Connector type

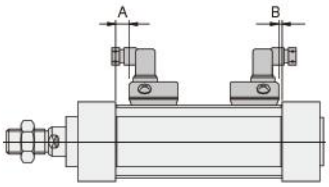

Grommet type enlarged view

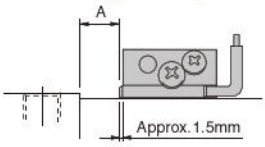

●Precaution for mounting

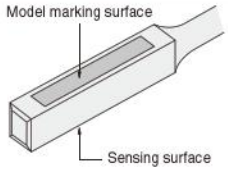

For the ZC type sensor switches, the surface opposite to the model marking surface is the sensing surface side. Mount so that the cylinder magnet comes to the sensing surface side.

●Single rod basic type and non-rotating double rod type

mm [in.]

Sensor switch model		Bore size / Code	32	40	50	63	80	100	125
Solid state type	ZC130 ZC153	A	9 [0.354]	9 [0.354]	9 [0.354]	9.5 [0.374]	12.5 [0.492]	12.5 [0.492]	14.5 [0.571]
		B	5 [0.197]	5 [0.197]	5 [0.197]	5.5 [0.217]	6.5 [0.256]	6.5 [0.256]	10.5 [0.413]
Reed switch type	CS5T	A	10.5 [0.413]	10.5 [0.413]	10.5 [0.413]	11 [0.433]	14 [0.551]	14 [0.551]	16 [0.630]
		B	6.5 [0.256]	6.5 [0.256]	6.5 [0.256]	7 [0.276]	8 [0.315]	8 [0.315]	12 [0.472]
	CS11T	A	7 [0.276]	7 [0.276]	7 [0.276]	7.5 [0.295]	10.5 [0.413]	10.5 [0.413]	12.5 [0.492]
		B	3 [0.118]	3 [0.118]	3 [0.118]	3.5 [0.138]	4.5 [0.177]	4.5 [0.177]	8.5 [0.335]
	CS□F	A	3.5 [0.138]	3.5 [0.138]	3.5 [0.138]	4 [0.157]	7 [0.276]	7 [0.276]	9 [0.354]
		B	0	0	0	0	1 [0.039]	1 [0.039]	5 [0.197]

Caution: The reed sensor switch cannot be mounted on the head side in any direction other than that shown in the diagram.

●Standard double rod type

mm [in.]

Sensor switch model		Bore size / Code	32	40	50	63	80	100	125
Solid state type	ZC130 ZC153	A	9.5 [0.374]	9 [0.354]	9.5 [0.374]	9.5 [0.374]	12.5 [0.492]	12.5 [0.492]	14.5 [0.571]
		B	4.5 [0.177]	5 [0.197]	4.5 [0.177]	5.5 [0.217]	6.5 [0.256]	6.5 [0.256]	10.5 [0.413]
Reed switch type	CS5T	A	11 [0.433]	10.5 [0.413]	11 [0.433]	11 [0.433]	14 [0.551]	14 [0.551]	16 [0.630]
		B	6 [0.236]	6.5 [0.256]	6 [0.236]	7 [0.276]	8 [0.315]	8 [0.315]	12 [0.472]
	CS11T	A	7.5 [0.295]	7 [0.276]	7.5 [0.295]	7.5 [0.295]	10.5 [0.413]	10.5 [0.413]	12.5 [0.492]
		B	2.5 [0.098]	3 [0.118]	2.5 [0.098]	3.5 [0.138]	4.5 [0.177]	4.5 [0.177]	8.5 [0.335]
	CS□F	A	4 [0.157]	3.5 [0.138]	4 [0.157]	4 [0.157]	7 [0.276]	7 [0.276]	9 [0.354]
		B	0	0	0	0	1 [0.039]	1 [0.039]	5 [0.197]

Caution: The reed sensor switch cannot be mounted on the head side in any direction other than that shown in the diagram.

●ZC130, ZC153, CS□T

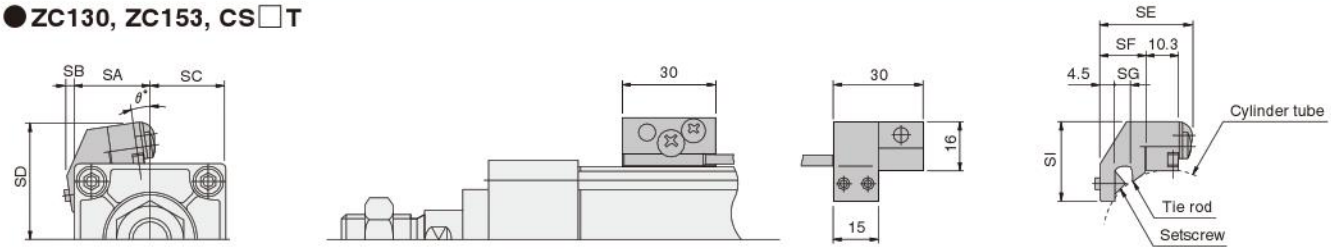

Bore mm [in.] \ Code	SA	SB	SC	SD	SE	SF	SG	SI	θ
32 [1.260]	27	5	17	35	29.8	15.5	6	25.5	1
40 [1.575]	26.1	2	23.9	38.4	29.8	15.5	6	25.5	10
50 [1.969]	27.1	0.7	34.9	43.4	29.8	15.5	6	25.5	10
63 [2.480]	28.3	0	46.7	48.6	31.8	17.5	8	24.5	18
80 [3.150]	30.9	0	63.1	55.9	33.3	19	9.5	22.5	22
100 [3.940]	32.2	0	79.8	63.6	33.3	19	9.5	22.5	24.5
125 [4.921]	36.5	—	99.5	75	37.5	24.8	11	15.5	27.5

●CS□F

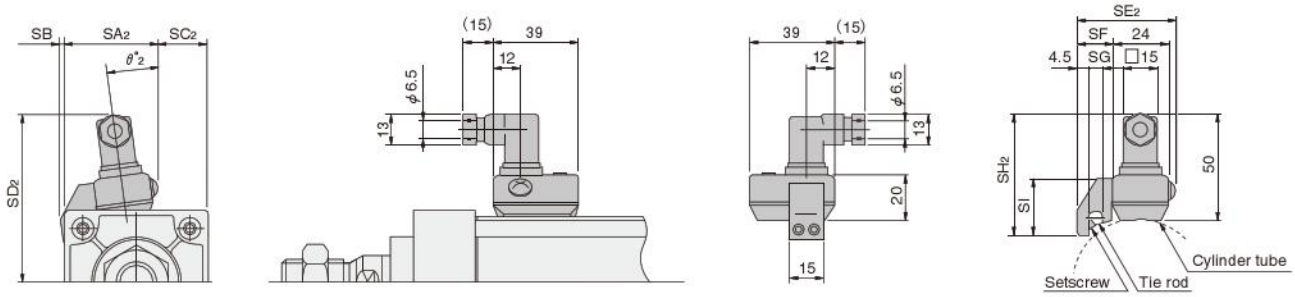

Bore mm [in.] \ Code	SA_2	SB	SC_2	SD_2	SE_2	SF	SG	SH_2	SI	θ_2
32 [1.260]	41.5	5	2.5	66.5	43	15.5	6	56.5	25.5	2.3
40 [1.575]	33.5	1.5	16.5	70	43	15.5	6	56.5	25.5	12
50 [1.969]	40	0.5	22	74.5	43	15.5	6	56.5	25.5	10
63 [2.480]	40.5	0	34.5	79.5	45	17.5	6	55.5	24.5	19
80 [3.150]	42.5	—	51.5	86	46.5	19	9.5	53.5	22.5	23
100 [3.940]	44	—	68	93.5	46.5	19	9.5	53.5	22.5	25
125 [4.921]	49.5	—	86.5	106.5	52.5	25	11	50.5	15.5	23.5

ZC1□□, CS□T types

Requiring parts for mounting 1 sensor switch on a cylinder

①Sensor Switch
②Washer×1
③Screw (short)×1
④Sensor holder×1
⑤Setscrew×2
⑥Tie rod
⑦Screw (long)×1
⑧Sub-holder×1

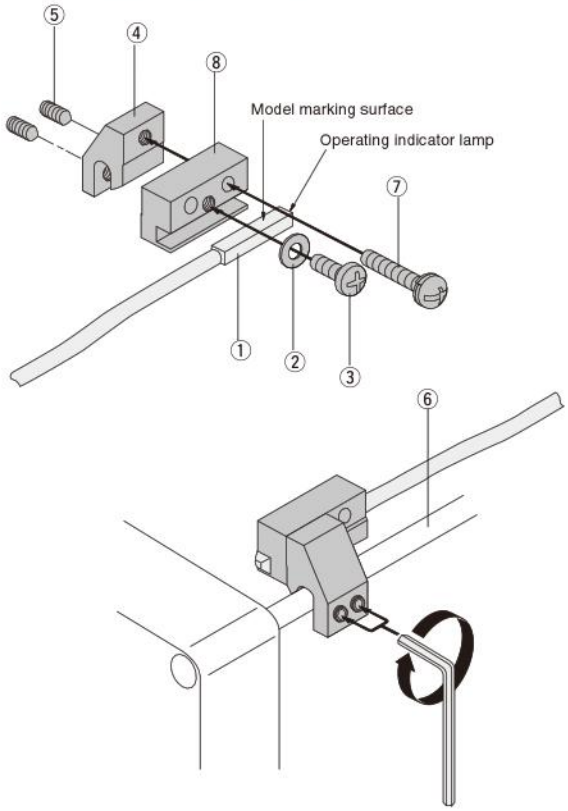

1. ●Align the female thread of sensor holder ④ to the position of the sub-holder ⑧'s thru hole, and use a screw (long) ⑦ to assemble.
   ●Two thru holes are available for ⑧. Either one can be used.
   ●The appropriate tightening torque for ⑦ is 70 N·cm [6.2in·lbf].
2. ●Install the sensor switch ① with the model marking surface facing upward, and fit it on the groove of ⑧.
   ●Align the edges of the body ① and indicator lamp (or the cap) to the end plane of ⑧, and assemble. To protect ①, always assemble so that the body ① does not protrude from the end surface of ⑧.
   ●The appropriate tightening torque for the screw (short) ③ is 70N·cm [6.2in·lbf].
3. ●Two setscrews ⑤ are temporarily fixed ④ in place.
   ●Fit ④ that was assembled with ① and ⑧ onto the tie rod ⑥, and align it to the designated position. Then use an Allen wrench (width across flats B = 2) to tighten ⑤ and secure it in place. Always secure it so that the bottom surface of ⑧ is in contact with the cylinder tube.
   ●The appropriate tightening torque for ⑤ is 70 N·cm [6.2in·lbf].
   ●There are four ⑥s on the cylinder, and ④ can be installed on any of them. In addition, ④ can be fitted in any direction.
   ●Loosening the 2 screws ⑤ allows ④ to be moved freely along ⑥.

CS□F type

Requiring parts for mounting 1 sensor switch on a cylinder

①Sensor Switch
②Washer×1
③Screw×1
④Sensor holder×1
⑤Setscrew×2
⑥Tie rod

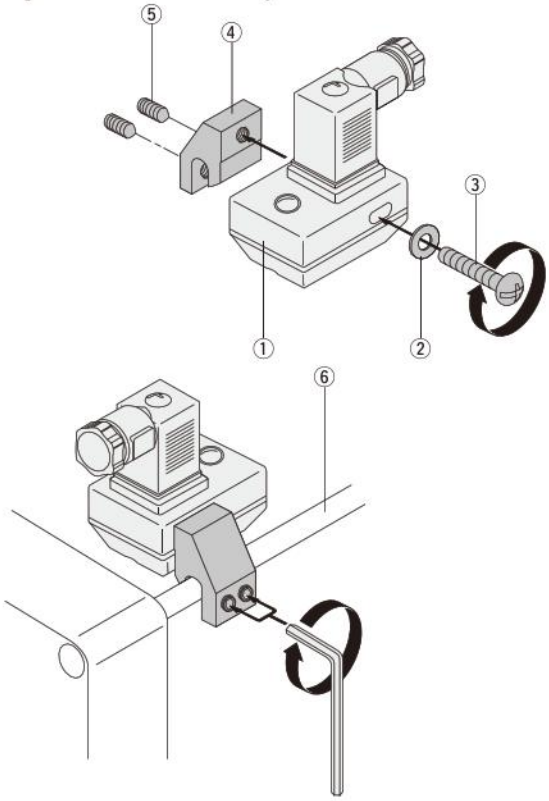

1. ●For the sensor switch ①, align the female thread of sensor holder ④ to any required location of the ①'s thru hole (oval), and assemble.
   ●The appropriate tightening torque for the screw ③ is 70N·cm [6.2in·lbf].
2. ●Use 2 setscrews ⑤ to temporarily fix ④ in place.
   ●Fit ④ that was assembled with ① onto the tie rod ⑥, and align it to the designated position. Then use an Allen wrench (width across flats B = 2) to tighten ⑤ and secure it in place. Always secure it so that the bottom surface of ① is in contact with the cylinder tube.
   ●To detect the head side end of stroke, mount ① so that the connector wiring port faces toward the head cover side, as shown in the diagram to the left.
   ●The appropriate tightening torque for ⑤ is 70N·cm [6.2in·lbf].
   ●There are four ⑥s on the cylinder, and ④ can be installed on any of them. In addition, ④ can be fitted in any direction.
   ●Loosening the 2 screws ⑤ allows ④ to be moved freely along ⑥.

Dimensions of Knuckle (mm)

● Y type

DDA Bore size -Y

ϕ 32

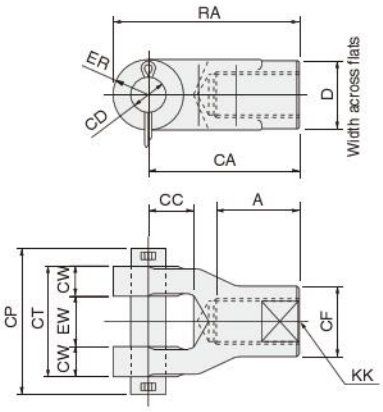

ϕ 40～ ϕ 125

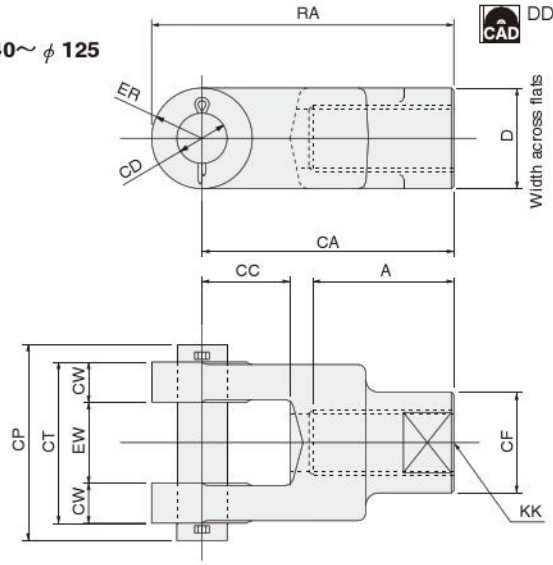

Bore mm [in.] \ Code	A	CA	CC	CD	CF	CP	CT	CW	D	ER	EW	KK (other than non-rotating)	KK (non-rotating)	RA
32 [1.260]	23	55	20	ϕ12H9/f8	ϕ 24	46	32	8	24	R12	16 $^{+1.5}_{+0.5}$	M10×1.25	—	67
40 [1.575]	18	46	16	ϕ12H9/f8	ϕ 25	48	36	9	—	R12.5	18 $^{+0.4}_{+0.1}$	M14×1.5	M12×1.25	58.5
50 [1.969]	22	46	16	ϕ12H9/f8	ϕ 25	48	36	9	—	R12.5	18 $^{+0.4}_{+0.1}$	M18×1.5	M18×1.5	58.5
63 [2.480]	22	50	20	ϕ16H9/f8	ϕ 32	56	44	11	—	R16	22 $^{+0.4}_{+0.1}$	M18×1.5	M18×1.5	66
80 [3.150]	30	75	25	ϕ20H9/f8	ϕ 40	68	56	14	—	R20	28 $^{+0.4}_{+0.1}$	M22×1.5	M22×1.5	95
100 [3.940] (other than non-rotating)	34	75	25	ϕ20H9/f8	ϕ 40	68	56	14	—	R20	28 $^{+0.4}_{+0.1}$	M26×1.5	—	95
100 [3.940] (non-rotating)	34	75	25	ϕ20H9/f8	ϕ 40	68	56	14	—	R20	28 $^{+0.4}_{+0.1}$	—	M22×1.5	95
125 [4.921]	56	100	35	ϕ20H9/f8	ϕ 40	78	64	16	40	R20	32 $^{+1.5}_{+0.5}$	M27×2	—	120

● I type

DDA Bore size -I

ϕ 32～ ϕ 100

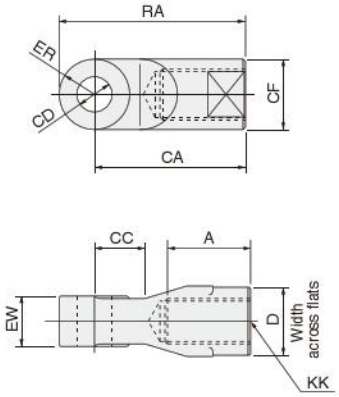

ϕ 125

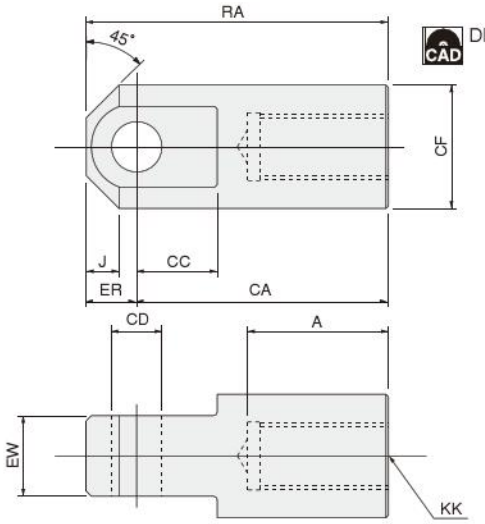

Bore mm [in.] \ Code	A	CA	CC	CD	CF	D	ER	EW	J	KK (other than non-rotating)	KK (non-rotating)	RA
32 [1.260]	23	55	20	ϕ 12H9	ϕ 24	24	R12	16 $^{0}_{-0.1}$	—	M10×1.25	—	67
40 [1.575]	18	46	16	ϕ 12H9	ϕ 25	—	R12.5	18 $^{-0.1}_{-0.4}$	—	M14×1.5	M12×1.25	58.5
50 [1.969]	22	46	16	ϕ 12H9	ϕ 25	—	R12.5	18 $^{-0.1}_{-0.4}$	—	M18×1.5	M18×1.5	58.5
63 [2.480]	22	50	20	ϕ 16H9	ϕ 32	—	R16	22 $^{-0.1}_{-0.4}$	—	M18×1.5	M18×1.5	66
80 [3.150]	30	75	25	ϕ 20H9	ϕ 40	—	R20	28 $^{-0.1}_{-0.4}$	—	M22×1.5	M22×1.5	95
100 [3.940] (other than non-rotating)	34	75	25	ϕ 20H9	ϕ 40	—	R20	28 $^{-0.1}_{-0.4}$	—	M26×1.5	—	95
100 [3.940] (non-rotating)	34	75	25	ϕ 20H9	ϕ 40	—	R20	28 $^{-0.1}_{-0.4}$	—	—	M22×1.5	95
125 [4.921]	56	100	32	ϕ 20H9	ϕ 49	—	20	32 $^{0}_{-0.1}$	13	M27×2	—	120

Dimensions of Bellows (mm [in.])

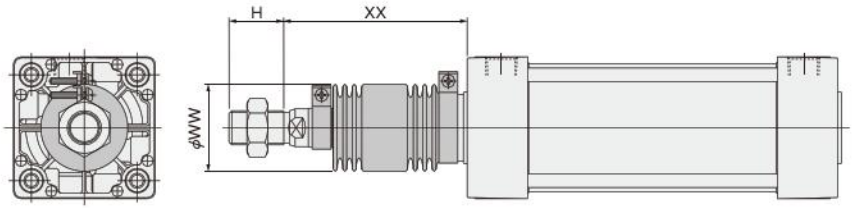

Code / Bore size mm [in.]	WW				XX				H
	Nylon tarpaulin	Chloroprene	Conex	Alumix	Nylon tarpaulin	Chloroprene	Conex	Alumix	
32 [1.260]	36 [1.42]	36 [1.42]	61 [2.40]	36 [1.42]	1/3 stroke＋48 [1.89]	1/3 stroke＋48 [1.89]	1/2 stroke＋48 [1.89]	1/2 stroke＋48 [1.89]	19 [0.75]
40 [1.575]	41 [1.61]	41 [1.61]	61 [2.40]	41 [1.61]					21 [0.83]
50 [1.969]	47 [1.85]	47 [1.85]	61 [2.40]	47 [1.85]	1/3 stroke＋53 [2.09]	1/3 stroke＋53 [2.09]	1/2 stroke＋53 [2.09]	1/2 stroke＋53 [2.09]	29 [1.14]
63 [2.480]	47 [1.85]	47 [1.85]	61 [2.40]	47 [1.85]					29 [1.14]
80 [3.150]	56 [2.20]	56 [2.20]	61 [2.40]	56 [2.20]	1/4 stroke＋58 [2.28]	1/4 stroke＋58 [2.28]	2/5 stroke＋58 [2.28]	2/5 stroke＋58 [2.28]	37 [1.46]
100 [3.940]	61 [2.40]	61 [2.40]	61 [2.40]	61 [2.40]					37 [1.46]
125 [4.921]	71 [2.80]	71 [2.80]	71 [2.80]	71 [2.80]	1/4 stroke＋59 [2.32]	1/4 stroke＋59 [2.32]	2/5 stroke＋59 [2.32]	2/5 stroke＋59 [2.32]	50 [1.97]

●Bellows Specifications

Type / Specifications	Contents	Heat resistant temperature °C [°F]
Nylon tarpaulin (standard)	Coating vinyle to nylon cloth	80 [176]
Chloroprene	Coating chloroprene to nylon cloth	100 [212]
Conex	Coating silicone to Conex cloth (no use of asbestos)	200 [392]
Alumix	Coating aluminum foil to asbestos cloth	250 [482]

Note: The temperatures shown are the bellows' own durable temperatures, and are not temperatures for cylinder use.

Order Codes of Mounting Brackets and Knuckles

●Mounting bracket

□ – □ □

Cylinder type
NDDA — DYNA cylinder
NDDAR — DYNA cylinder with brake
NDDAE — DYNA pull side stroke adjusting cylinder
NDDAP — DYNA push side stroke adjusting cylinder

Bore size
32 — For φ 32 [1.260in.]
40 — For φ 40 [1.575in.]
50 — For φ 50 [1.969in.]
63 — For φ 63 [2.480in.]
80 — For φ 80 [3.150in.]
100 — For φ 100 [3.940in.]
125 — For φ 125 [4.921in.]

Mounting bracket
1 — Foot mounting type (One set of 2 units)
2 — Axial foot mounting type (One set of 2 units)
3 — Rod side flange mounting type Note
5 — Head side flange mounting type
7 — Clevis mounting type (with pin)
7-7C — Clevis mounting type (with supporting bracket)
8 — Pivot mounting type
11 — Trunnion type
11-11T — Trunnion type (with supporting brackets)

Note: The rod side flange cannot be retrofitted with the bellows type .

●Y, I type knuckle

□ – □ □

Cylinder type
NDDA — DYNA cylinder
NDDAL — DYNA non-rotating cylinder

Knuckles
Y — Y type knuckle
I — I type knuckle

●For dimensions of knuckle, see p.537.

Bore size
32 — For φ 32 [1.260in.]
40 — For φ 40 [1.575in.]
50 — For φ 50 [1.969in.]
63 — For φ 63 [2.480in.]
80 — For φ 80 [3.150in.]
100 — For φ 100 [3.940in.]
125 — For φ 125 [4.921in.]

Maximum Available Stroke of Cylinder with Bellows

mm [in.]

Bellows model / Bore size	φ 32 [1.260]～φ 63 [2.480]	φ 80 [3.150]～φ 125 [4.921]
JT	Maximum available St×3／4–50	Maximum available St×4／5–50
JC	Maximum available St×3／4–50	Maximum available St×4／5–50
JK	Maximum available St×2／3–50	Maximum available St×2／3–50
JA	Maximum available St×2／3–50	Maximum available St×2／3–50