CAD drawing data catalog is available.

KOGANEI

ACTUATORS GENERAL CATALOG

JIG CYLINDERS C SERIES

CONTENTS

Series Introduction — 133
Cylinder Thrust — 135

Standard Cylinders Double Acting Type, Single Acting Push Type, and Single Acting Pull Type
- Specifications — 137
- Order Codes — 138
- Inner Construction and Major Parts — 139
- Dimensions — 141

Non-rotating Cylinders Double Acting Type
- Specifications — 145
- Order Codes — 146
- Inner Construction and Major Parts — 147
- Dimensions — 148

Square Rod Cylinders Double Acting Type
- Specifications — 149
- Order Codes — 150
- Inner Construction and Major Parts — 151
- Dimensions — 152

Double Rod Cylinders Double Acting Type and Single Acting Type
- Specifications — 154
- Order Codes — 155
- Inner Construction and Major Parts — 156
- Dimensions — 158

Tandem Cylinders Double Acting Type and Single Acting Push Type
- Specifications — 161
- Order Codes — 162
- Inner Construction and Major Parts — 163
- Dimensions — 165

Dual Stroke Cylinders Double Acting Type, Single Acting Push Type, and Single Acting Pull Type
- Specifications — 170
- Order Codes — 171
- Inner Construction and Major Parts — 172
- Dimensions — 174

Lateral Load Resistant Cylinders Double Acting Type
- Specifications — 180
- Order Codes — 181
- Inner Construction and Major Parts — 182
- Dimensions — 183

Long Stroke Cylinders Double Acting Type
- Specifications — 185
- Order Codes — 186
- Inner Construction and Major Parts — 187
- Dimensions — 188

End Keep Cylinders Double Acting Type
- Specifications — 190
- Order Codes — 191
- Inner Construction and Major Parts — 192
- Dimensions — 194

Mounting Brackets — 197
Sensor Switches — 199
Handling Instructions and Precautions — 205
Optional Rod End Shape Patterns — 208
Mounting Screws for Jig Cylinders — 209

⚠ **Caution** **Before use, be sure to read the "Safety Precautions" on p. 57.**

Square body demonstrates powerful downsizing capacity.

JIG CYLINDERS C SERIES

Richly abundant series of 9 different types and 69 models

A rich series configuration spanning from φ6 [0.236in.] to φ100 [3.940in.] responds to diverse needs far better than previous thin type cylinders.
Moreover, Non-ion specification is also available as standard.
(Excludes φ6 [0.236in.], φ8 [0.315in.], and φ10 [0.394in.])

Provides powerful back-up for device miniaturization

Exhibits no protrusions in its external shape even after a sensor switch has been mounted, for easy mounting in tight spaces.
This cylinder is one step up on cylinders of the same class in terms of size, mass, and performance.

φ6 [0.236in.]

φ100 [3.940in.]

New Line-Up Includes φ6 [0.236in.], φ8 [0.315in.], and φ10 [0.394in.]

For a greater selection in response to needs for miniaturization, 3 new bore sizes at φ6, φ8, and φ10 have been added, increasing the range of sizes to choose from.

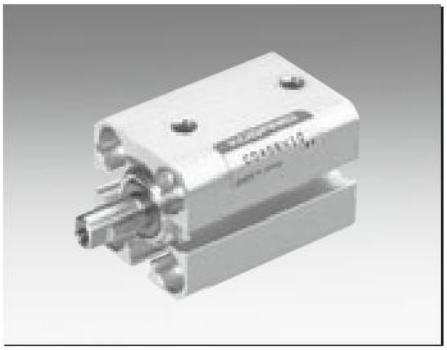

Standard Cylinders
φ6 [0.236in.]～φ100 [3.940in.]

Non-rotating Cylinders
φ6 [0.236in.]～φ10 [0.394in.]

Double Rod Cylinders
φ6 [0.236in.]～φ100 [3.940in.]

The Jig Cylinders C Series Includes the 9 Types Shown Below.

■Standard Cylinders p.137

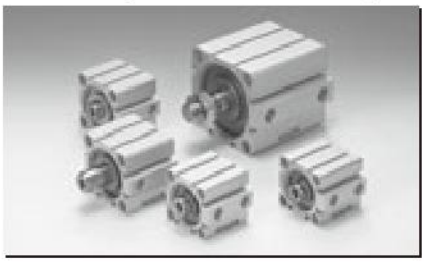

■Non-rotating Cylinders p.145

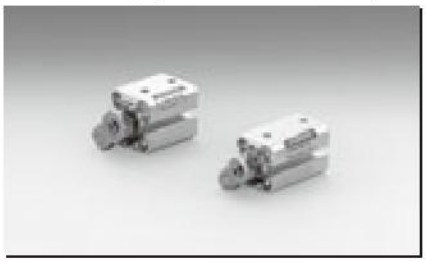

■Square Rod Cylinders p.149

■Double Rod Cylinders p.154

■Tandem Cylinders p.161

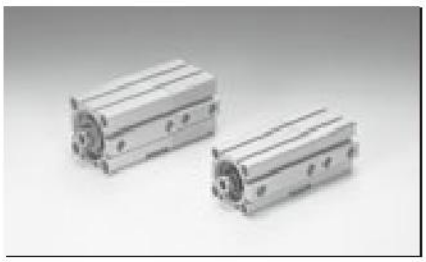

■Dual Stroke Cylinders p.170

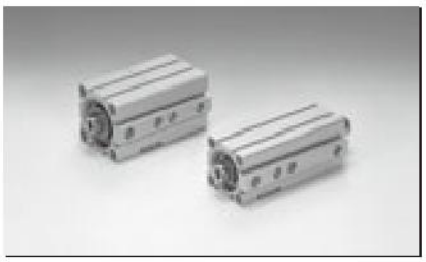

■Lateral Load Resistant Cylinders p.180

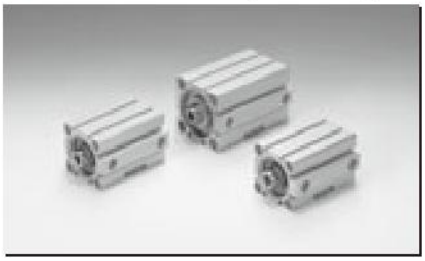

■Long Stroke Cylinders p.185

■End Keep Cylinders p.190

■Mounting Brackets p.197

■Sensor Switches p.199

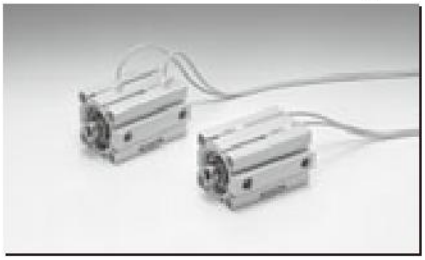

	Operation type			Cylinder specifications		Rod end specifications		Bumpers	Centering location	Non-ion specification	Mounting brackets		
	Double acting type	Single acting push type	Single acting pull type	Cylinder with magnet	Heat resistant type	Female thread	Male thread	Not available for heat resistant type		Not available for heat resistant type	Foot mounting bracket	Flange mounting bracket	Clevis mounting bracket
Standard Cylinders	■	■	■	■	□	■	■	□	□	□	□	□	
Non-rotating Cylinders	■ Note			■ Note		■ Note	■ Note						
Square Rod Cylinders	□			□		□	□	□	□		□	□	
Double Rod Cylinders	■	□	□	■	□	■	■	□	□	□	□	□	
Tandem Cylinders	□	□		□	□	□	□	□	□	□		□	
Dual Stroke Cylinders	□	□	□	□		□	□	□	□	□		□	
Lateral Load Resistant Cylinders	□			□		□	□	□	□	□	□	□	□
Long Stroke Cylinders	□			□		□	□	□	□	□	□	□	□
End Keep Cylinders	□			□		□	□	□	□	□	□	□	□

■ The colored areas include bore sizes of ϕ6, ϕ8, and ϕ10.
Note: Non-rotating cylinders are set at bore sizes ϕ6, ϕ8, and ϕ10 only.

Cylinder Thrust

Select a suitable bore size considering the load and air pressure to obtain the required thrust.
Since the figures in the table are calculated values, select a bore size that results in a load ratio (load ratio = $\frac{\text{Load}}{\text{Calculated value}}$) of 70% or less (50% or less for high speed).

● Double acting type

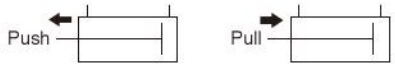

N [lbf.]

Bore size mm [in.]	Piston rod diameter mm [in.]	Operation	Pressure area mm² [in.²]	Air pressure MPa [psi.] 0.1 [15]	0.2 [29]	0.3 [44]	0.4 [58]	0.5 [73]	0.6 [87]	0.7 [102]	0.8 [116]	0.9 [131]	1.0 [145]
6 [0.236]	4 [0.157]	Push side	28.3 [0.0439]	2.8 [0.63]	5.7 [1.28]	8.5 [1.91]	11.3 [2.54]	14.1 [3.17]	17.0 [3.82]	19.8 [4.45]	22.6 [5.08]	25.4 [5.71]	–
		Pull side	15.7 [0.0243]	1.6 [0.36]	3.1 [0.7]	4.7 [1.06]	6.3 [1.42]	7.9 [1.78]	9.4 [2.11]	11.0 [2.47]	12.6 [2.83]	14.1 [3.17]	–
8 [0.315]	5 [0.197]	Push side	50.3 [0.0780]	5.0 [1.12]	10.1 [2.27]	15.1 [3.39]	20.1 [4.52]	25.1 [5.64]	30.2 [6.79]	35.2 [7.91]	40.2 [9.04]	45.2 [10.2]	–
		Pull side	30.6 [0.0474]	3.1 [0.70]	6.1 [1.37]	9.2 [2.07]	12.3 [2.77]	15.3 [3.44]	18.4 [4.14]	21.4 [4.81]	24.5 [5.51]	27.6 [6.20]	–
10 [0.394]	5 [0.197]	Push side	78.5 [0.1217]	7.9 [1.78]	15.7 [3.53]	23.6 [5.31]	31.4 [7.06]	39.3 [8.83]	47.1 [10.6]	55.0 [12.4]	62.8 [14.1]	70.7 [15.9]	–
		Pull side	58.9 [0.0913]	5.9 [1.33]	11.8 [2.65]	17.7 [3.98]	23.6 [5.31]	29.5 [6.63]	35.3 [7.94]	41.2 [9.26]	47.1 [10.6]	53.0 [11.9]	–
12 [0.472]	6 [0.236]	Push side	113.0 [0.175]	11.3 [2.54]	22.6 [5.08]	33.9 [7.62]	45.2 [10.2]	56.5 [12.7]	67.8 [15.2]	79.1 [17.8]	90.4 [20.3]	101.7 [22.86]	113.0 [25.40]
		Pull side	84.8 [0.131]	8.5 [1.91]	17.0 [3.82]	25.4 [5.71]	33.9 [7.62]	42.4 [9.53]	50.9 [11.4]	59.3 [13.3]	67.8 [15.2]	76.3 [17.2]	84.8 [19.1]
16 [0.630]	8 [0.315]	Push side	201.0 [0.312]	20.1 [4.52]	40.2 [9.04]	60.3 [13.6]	80.4 [18.1]	100.5 [22.59]	120.6 [27.11]	140.7 [31.63]	160.8 [36.15]	180.9 [40.67]	201.0 [45.18]
		Pull side	150.0 [0.233]	15.1 [3.39]	30.1 [6.77]	45.2 [10.2]	60.3 [13.6]	75.4 [16.9]	90.4 [20.3]	105.5 [23.72]	120.6 [27.11]	135.6 [30.48]	150.7 [33.88]
20 [0.787]	10 [0.394]	Push side	314.0 [0.487]	31.4 [7.06]	62.8 [14.1]	94.2 [21.2]	125.6 [28.23]	157.0 [35.29]	188.4 [42.35]	219.8 [49.41]	251.2 [56.47]	282.6 [63.53]	314.0 [70.59]
		Pull side	235.5 [0.365]	23.6 [5.31]	47.1 [10.6]	70.7 [15.9]	94.2 [21.2]	117.8 [26.48]	141.3 [31.76]	164.9 [37.07]	188.4 [42.35]	212.0 [47.66]	235.5 [52.94]
25 [0.984]	12 [0.472]	Push side	490.6 [0.760]	49.1 [11.0]	98.1 [22.1]	147.2 [33.09]	196.3 [44.13]	245.3 [55.14]	294.4 [66.18]	343.4 [77.20]	392.5 [88.23]	441.6 [99.27]	490.6 [110.3]
		Pull side	377.6 [0.585]	37.8 [8.50]	75.5 [17.0]	113.3 [25.47]	151.0 [33.94]	188.8 [42.44]	226.6 [50.94]	264.3 [59.41]	302.1 [67.91]	339.8 [76.39]	377.6 [84.88]
32 [1.260]	16 [0.630]	Push side	803.8 [1.246]	80.4 [18.1]	160.8 [36.15]	241.2 [54.22]	321.5 [72.27]	401.9 [90.35]	482.3 [108.4]	562.7 [126.5]	643.1 [144.6]	723.5 [162.6]	803.8 [180.7]
		Pull side	602.9 [0.934]	60.3 [13.6]	120.6 [27.11]	180.9 [40.67]	241.2 [54.22]	301.4 [67.75]	361.7 [81.31]	422.0 [94.87]	482.3 [108.4]	542.6 [122.0]	602.9 [135.5]
40 [1.575]	16 [0.630]	Push side	1256.0 [1.947]	125.6 [28.23]	251.2 [56.47]	376.8 [84.70]	502.4 [112.9]	628.0 [141.2]	753.6 [169.4]	879.2 [197.6]	1004.8 [225.9]	1130.4 [254.1]	1256.0 [282.3]
		Pull side	1055.0 [1.635]	105.5 [23.72]	211.0 [47.43]	316.5 [71.15]	422.0 [94.87]	527.5 [118.6]	633.0 [142.3]	738.5 [166.0]	844.0 [189.7]	949.5 [213.4]	1055.0 [237.2]
50 [1.969]	20 [0.787]	Push side	1962.5 [3.042]	196.3 [44.13]	392.5 [88.23]	588.8 [132.4]	785.0 [176.5]	981.3 [220.6]	1177.5 [264.7]	1373.8 [308.8]	1570.0 [352.9]	1766.3 [397.1]	1962.5 [441.2]
		Pull side	1648.5 [2.555]	164.9 [37.07]	329.7 [74.12]	494.6 [111.2]	659.4 [148.2]	824.3 [185.3]	989.1 [222.3]	1154.0 [259.4]	1318.8 [296.5]	1483.7 [333.5]	1648.5 [370.6]
63 [2.480]	20 [0.787]	Push side	3115.7 [4.829]	311.6 [70.05]	623.1 [140.1]	934.7 [210.1]	1246.3 [280.2]	1557.8 [350.2]	1869.4 [420.2]	2181.0 [490.3]	2492.5 [560.3]	2804.1 [630.4]	3115.7 [700.4]
		Pull side	2801.7 [4.343]	280.2 [62.99]	560.3 [126.0]	840.5 [188.9]	1120.7 [251.9]	1400.8 [314.9]	1681.0 [377.9]	1961.2 [440.9]	2241.3 [503.8]	2521.5 [566.8]	2801.7 [629.8]
80 [3.150]	25 [0.984]	Push side	5024.0 [7.787]	502.4 [112.9]	1004.8 [225.9]	1507.2 [338.8]	2009.6 [451.8]	2512.0 [564.7]	3014.4 [677.6]	3516.8 [790.6]	4019.2 [903.5]	4521.6 [1016.5]	5024.0 [1129.4]
		Pull side	4533.4 [7.027]	453.3 [101.9]	906.7 [203.8]	1360.0 [305.7]	1813.4 [407.7]	2266.7 [509.6]	2720.0 [611.5]	3173.4 [713.4]	3626.7 [815.3]	4080.0 [917.2]	4533.4 [1019.1]
100 [3.940]	32 [1.181]	Push side	7850.0 [12.168]	785.0 [176.5]	1570.0 [352.9]	2355.0 [529.4]	3140.0 [705.9]	3925.0 [882.3]	4710.0 [1058.8]	5495.0 [1235.3]	6280.0 [1411.7]	7065.0 [1588.2]	7850.0 [1764.7]
		Pull side	7046.2 [10.922]	704.6 [158.4]	1409.2 [316.8]	2113.8 [475.2]	2818.5 [633.6]	3523.1 [792.0]	4227.7 [950.4]	4932.3 [1108.8]	5636.9 [1267.2]	6341.5 [1425.6]	7046.2 [1584.0]

● Single acting type

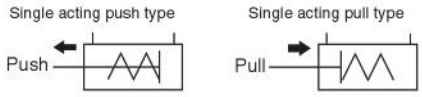

N [lbf.]

Operation type	Bore size mm [in.]	Piston rod diameter mm [in.]	Pressure area mm² [in.²]	Air pressure MPa [psi.] 0.1 [15]	0.2 [29]	0.3 [44]	0.4 [58]	0.5 [73]	0.6 [87]	0.7 [102]	0.8 [116]	0.9 [131]	1.0 [145]
Single acting push type	**6 [0.236]**	4 [0.157]	28.3 [0.0439]	–	–	5.6 [1.26]	8.4 [1.89]	11.2 [2.52]	14.1 [3.17]	16.9 [3.80]	19.7 [4.43]	22.5 [5.06]	–
	8 [0.315]	5 [0.197]	50.3 [0.0780]	–	–	10.4 [2.34]	15.4 [3.46]	20.4 [4.59]	25.5 [5.73]	30.5 [6.86]	35.5 [7.98]	40.5 [9.10]	–
	10 [0.394]	5 [0.197]	78.5 [0.1217]	–	–	18.9 [4.25]	26.7 [6.00]	34.6 [7.78]	42.4 [9.53]	50.3 [11.3]	58.1 [13.1]	66.0 [14.8]	–
	12 [0.472]	6 [0.236]	113.0 [0.175]	–	12.8 [2.88]	24.1 [5.42]	35.4 [7.96]	46.7 [10.5]	58.0 [13.0]	69.3 [15.6]	80.6 [18.1]	91.9 [20.7]	103.2 [23.20]
	16 [0.630]	6 [0.236]	201.0 [0.312]	–	26.1 [5.87]	46.2 [10.4]	66.3 [14.9]	86.4 [19.4]	106.5 [23.94]	126.6 [28.46]	146.7 [32.98]	166.8 [37.50]	186.9 [42.02]
	20 [0.787]	8 [0.315]	314.0 [0.487]	–	49.0 [11.0]	80.4 [18.1]	111.8 [25.13]	143.2 [32.19]	174.6 [39.25]	206.0 [46.31]	237.4 [53.37]	268.8 [60.43]	300.2 [67.48]
	25 [0.984]	10 [0.394]	490.6 [0.760]	–	76.3 [17.2]	125.4 [28.19]	174.5 [39.23]	223.5 [50.24]	272.6 [61.28]	321.6 [72.30]	370.7 [83.33]	419.8 [94.37]	468.8 [105.4]
	32 [1.260]	12 [0.472]	803.8 [1.246]	–	123.4 [27.74]	203.8 [45.81]	284.1 [63.87]	364.5 [81.94]	444.9 [100.0]	525.3 [118.1]	605.7 [136.2]	686.1 [154.2]	766.4 [172.3]
	40 [1.575]	16 [0.630]	1256.0 [1.947]	–	205.9 [46.29]	331.5 [74.52]	457.1 [102.8]	582.7 [131.0]	708.3 [159.2]	833.9 [187.5]	959.5 [215.7]	1085.1 [243.9]	1210.5 [272.1]
	50 [1.969]	20 [0.787]	1962.5 [3.042]	141.0 [31.70]	337.2 [75.80]	533.5 [119.9]	729.7 [164.0]	926.0 [208.2]	1122.2 [252.3]	1318.5 [296.4]	1514.7 [340.5]	1711.0 [384.6]	1907.2 [428.7]
Single acting pull type	**6 [0.236]**	4 [0.157]	15.7 [0.0243]	–	–	1.8 [0.40]	3.4 [0.76]	5.0 [1.12]	6.5 [1.46]	8.1 [1.82]	9.7 [2.18]	11.2 [2.52]	–
	8 [0.315]	5 [0.197]	30.6 [0.0474]	–	–	4.5 [1.01]	7.6 [1.71]	10.6 [2.38]	13.7 [3.08]	16.7 [3.75]	19.8 [4.45]	22.9 [5.15]	–
	10 [0.394]	5 [0.197]	58.9 [0.0913]	–	–	13.0 [2.92]	18.9 [4.25]	24.8 [5.58]	30.6 [6.88]	36.5 [8.21]	42.4 [9.53]	48.3 [10.9]	–
	12 [0.472]	6 [0.236]	84.8 [0.131]	–	7.2 [1.62]	15.6 [3.51]	24.1 [5.42]	32.6 [7.33]	41.1 [9.24]	49.5 [11.1]	58.0 [13.0]	66.5 [14.9]	75.0 [16.9]
	16 [0.630]	6 [0.236]	150.7 [0.234]	–	16.0 [3.60]	31.1 [6.99]	46.2 [10.4]	61.3 [13.8]	76.3 [17.2]	91.4 [20.5]	106.5 [23.94]	121.5 [27.31]	136.6 [30.71]
	20 [0.787]	8 [0.315]	235.5 [0.365]	–	33.3 [7.49]	56.9 [12.8]	80.4 [18.1]	104.0 [23.38]	127.5 [28.66]	151.1 [33.97]	174.6 [39.25]	198.2 [44.56]	221.7 [49.84]
	25 [0.984]	10 [0.394]	377.6 [0.585]	–	75.5 [17.0]	113.3 [25.47]	151.0 [33.94]	188.8 [42.44]	226.6 [50.94]	264.3 [59.41]	302.1 [67.91]	339.8 [76.39]	377.6 [84.88]
	32 [1.260]	12 [0.472]	602.9 [0.934]	–	61.4 [13.8]	121.7 [27.36]	182.0 [40.91]	242.2 [54.45]	302.5 [68.00]	362.8 [81.56]	423.1 [95.11]	483.4 [108.7]	543.7 [122.2]
	40 [1.575]	16 [0.630]	1055.0 [1.635]	–	165.7 [37.25]	271.2 [60.97]	376.7 [84.68]	482.2 [108.4]	587.7 [132.1]	693.2 [155.8]	798.7 [179.5]	904.2 [203.3]	1009.7 [227.0]
	50 [1.969]	20 [0.787]	1648.5 [2.555]	109.6 [24.64]	274.4 [61.69]	439.3 [98.75]	604.1 [135.8]	769.0 [172.9]	933.8 [209.9]	1098.7 [247.0]	1263.5 [284.0]	1428.4 [321.1]	1593.2 [358.2]

●Spring return force

N [lbf.]

Bore size mm	Stroke mm	Zero stroke	End of stroke
6	×5	2.1 [0.47]	2.9 [0.65]
	×10	1.2 [0.27]	
8	×5	3.3 [0.74]	4.7 [1.06]
	×10	1.9 [0.43]	
10	×5	3.3 [0.74]	4.7 [1.06]
	×10	1.9 [0.43]	
12	×5	7.7 [1.73]	9.8 [2.20]
	×10	5.7 [1.28]	
	×15	3.7 [0.83]	
	×20	5.7 [1.28]	
	×25	4.7 [1.06]	
	×30	3.7 [0.83]	
16	×5	11.1 [2.50]	14.1 [3.17]
	×10	8.2 [1.84]	
	×15	5.3 [1.19]	
	×20	8.2 [1.84]	
	×25	6.7 [1.51]	
	×30	5.3 [1.19]	
20	×5	11.6 [2.61]	13.8 [3.10]
	×10	9.5 [2.14]	
	×15	7.3 [1.64]	
	×20	9.5 [2.14]	
	×25	8.4 [1.89]	
	×30	7.3 [1.64]	

N [lbf.]

Bore size mm	Stroke mm	Zero stroke	End of stroke
25	×5	18.1 [4.07]	21.8 [4.90]
	×10	14.5 [3.26]	
	×15	10.7 [2.41]	
	×20	14.5 [3.26]	
	×25	12.7 [2.85]	
	×30	10.9 [2.45]	
32	×5	32.0 [7.19]	37.4 [8.41]
	×10	26.7 [6.00]	
	×15	21.3 [4.79]	
	×20	26.7 [6.00]	
	×25	24.0 [5.40]	
	×30	21.3 [4.79]	
40	×5	37.7 [8.47]	45.3 [10.18]
	×10	30.2 [6.79]	
	×15	22.6 [5.08]	
	×20	30.2 [6.79]	
	×25	26.4 [5.93]	
	×30	22.6 [5.08]	
50	×10	45.4 [10.21]	55.3 [12.43]
	×15	40.5 [9.10]	
	×20	35.5 [7.98]	
	×25	43.0 [9.67]	
	×30	40.5 [9.10]	
	×35	38.0 [8.54]	
	×40	35.5 [7.98]	

●How to read the thrust table

1. For the thrust of the double rod cylinder double acting type, see the pull side of the double acting type thrust table. For the thrust of the single acting type, see the single acting pull type thrust table.
2. The thrust of the tandem cylinder is double that of the standard type when air is supplied simultaneously to Port A and Port B, for any operation type before the stroke in Cylinder 1 is complete. When air is supplied to any of Ports A, B, or C alone, then the thrust is the same as for the standard type.

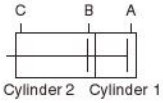

3. The thrust for dual stroke cylinders is the same as for the standard type, for any operation type.
4. When directly carrying a load, care must be exercised of a lateral load.
   For details, see p.206 “Lateral Load.”

●Square rod cylinders

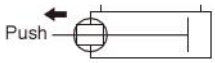

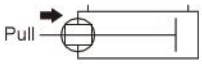

N [lbf.]

Bore size mm [in.]	Piston rod size mm [in.]	Operation	Pressure area mm² [in.²]	Air pressure MPa 0.1 [15]	0.2 [29]	0.3 [44]	0.4 [58]	0.5 [73]	0.6 [87]	0.7 [102]	0.8 [116]	0.9 [131]	1.0 [145]
20 [0.787]	□7.4 [□0.291]	Push side	314.0 [0.487]	31.4 [7.06]	62.8 [14.1]	94.2 [21.2]	125.6 [28.23]	157.0 [35.29]	188.4 [42.35]	219.8 [49.41]	251.2 [56.47]	282.6 [63.53]	314.0 [70.59]
		Pull side	259.2 [0.402]	25.9 [5.82]	51.8 [11.6]	77.8 [17.5]	103.7 [23.3]	129.6 [29.13]	155.5 [34.96]	181.5 [40.80]	207.4 [46.62]	233.3 [52.45]	259.2 [58.27]
25 [0.984]		Push side	490.6 [0.760]	49.1 [11.0]	98.1 [22.1]	147.2 [33.09]	196.3 [44.13]	245.3 [55.14]	294.4 [66.18]	343.4 [77.20]	392.5 [88.23]	441.6 [99.27]	490.6 [110.3]
		Pull side	435.9 [0.676]	43.6 [9.80]	87.2 [19.6]	130.8 [29.40]	174.3 [39.18]	217.9 [48.98]	261.5 [58.79]	305.1 [68.59]	348.7 [78.39]	392.3 [88.19]	435.9 [97.99]
32 [1.260]	□13 [□0.512]	Push side	803.8 [1.246]	80.4 [18.1]	160.8 [36.15]	241.2 [54.22]	321.5 [72.27]	401.9 [90.35]	482.3 [108.4]	562.7 [126.5]	643.1 [144.6]	723.5 [162.6]	803.8 [180.7]
		Pull side	634.8 [0.984]	63.5 [14.3]	127.0 [28.55]	190.5 [42.82]	253.9 [57.08]	317.4 [71.35]	380.9 [85.63]	444.4 [99.90]	507.9 [114.2]	571.4 [128.5]	634.8 [142.7]
40 [1.575]		Push side	1256.0 [1.947]	125.6 [28.23]	251.2 [56.47]	376.8 [84.70]	502.4 [112.9]	628.0 [141.2]	753.6 [169.4]	879.2 [197.6]	1004.8 [225.9]	1130.4 [254.1]	1256.0 [282.3]
		Pull side	1087.0 [1.685]	108.7 [24.44]	217.4 [48.87]	326.1 [73.31]	434.8 [97.74]	543.5 [122.2]	652.2 [146.6]	760.9 [171.1]	869.6 [195.5]	978.3 [219.9]	1087.0 [244.4]
50 [1.969]	□18 [□0.709]	Push side	1962.5 [3.042]	196.3 [44.13]	392.5 [88.23]	588.8 [132.4]	785.0 [176.5]	981.3 [220.6]	1177.5 [264.7]	1373.8 [308.8]	1570.0 [352.9]	1766.3 [397.1]	1962.5 [441.2]
		Pull side	1638.5 [2.540]	163.9 [36.84]	327.7 [73.67]	491.6 [110.5]	655.4 [147.3]	819.3 [184.2]	983.1 [221.0]	1147.0 [257.8]	1310.8 [294.7]	1474.7 [331.5]	1638.5 [368.3]
63 [2.480]		Push side	3115.7 [4.829]	311.6 [70.05]	623.1 [140.1]	934.7 [210.1]	1246.3 [280.2]	1557.8 [350.2]	1869.4 [420.2]	2181.0 [490.3]	2492.5 [560.3]	2804.1 [630.4]	3115.7 [700.4]
		Pull side	2791.7 [4.327]	279.2 [62.76]	558.3 [125.5]	837.5 [188.3]	1116.7 [251.0]	1395.8 [313.8]	1675.0 [376.5]	1954.2 [439.3]	2233.3 [502.0]	2512.5 [564.8]	2791.7 [627.6]

JIG CYLINDERS C SERIES STANDARD CYLINDERS

Double Acting Type,
Single Acting Push Type, Single Acting Pull Type

Symbols

● **Double acting type** ● **Single acting push type** ● **Single acting pull type**

Specifications

Item / Bore size mm [in.]		6 [0.236]	8 [0.315]	10 [0.394]	12 [0.472]	16 [0.630]	20 [0.787]	25 [0.984]	32 [1.260]	40 [1.575]	50 [1.969]	63 [2.480]	80 [3.150]	100 [3.940]
Operation type		Double acting type, Single acting push type, Single acting pull type										Double acting type		
Media		Air												
Operating pressure range MPa [psi.]	Double acting type	0.15～0.9 [22～131]			0.1～1.0 [15～145]						0.05～1.0 [7～145]			
	Single acting type	0.25～0.9 [36～131]			0.15～1.0 Note1 [22～145]						0.1～1.0 [15～145]	—		
Proof pressure	MPa [psi.]	1.35 [196]			1.5 [218]									
Operating temperature range	°C [°F]	0～60 [32～140] (The heat resistant specification is 120 [248]. Note2)												
Operating speed range mm/s [in./sec.]	Double acting type	30～500 [1.2～19.7]			30～500 [1.2～19.7]						30～300 [1.2～11.8]			
	Single acting type	50～500 [2.0～19.7]			100～500 [3.9～19.7]						100～300 [3.9～11.8]	—		
Cushion	Double acting type	None			Rubber bumper (Option Note3)									
	Single acting type	None										—		
Lubrication		Not required (If lubrication is required, use Turbine Oil Class 1 [**ISO VG32**] or equivalent.)												
Port size		M3×0.5			M5×0.8				Rc1/8		Rc1/4		Rc3/8	

Remark: For Handling Instructions and Precautions, see p.205.

Notes: 1. The single acting pull type of ϕ12 is 0.18～1.0MPa [26～145psi.].
2. For heat resistant specification, it is not available with the sensor switch. Not available for bore sizes ϕ6, ϕ8, and ϕ10.
3. Not available for bore sizes ϕ6, ϕ8, and ϕ10, and heat resistant specification.

Note: For strokes that exceed the maximum standard strokes for each double acting type cylinder's bore size, use the long stroke cylinders on p.185～189.

Bore Size and Stroke

For non-standard strokes, see p.206. mm

Operation type	Bore size	Standard strokes: Standard cylinder	Standard strokes: Cylinder with magnet
Double acting type	6	5, 10, 15, 20	5, 10, 15, 20
	8		
	10		
	12	5, 10, 15, 20, 25, 30	5, 10, 15, 20, 25, 30
	16		
	20	5, 10, 15, 20, 25, 30, 35, 40, 45, 50	5, 10, 15, 20, 25, 30, 35, 40, 45, 50
	25		
	32	5, 10, 15, 20, 25, 30, 35, 40, 45, 50, 75, 100	5, 10, 15, 20, 25, 30, 35, 40, 45, 50, 75, 100
	40		
	50	10, 15, 20, 25, 30, 35, 40, 45, 50, 75, 100	10, 15, 20, 25, 30, 35, 40, 45, 50, 75, 100
	63		
	80		
	100		
Single acting type	6	5, 10	5, 10
	8		
	10		
	12	5, 10, 15, 20, 25, 30	5, 10, 15, 20, 25, 30
	16		
	20		
	25		
	32		
	40		
	50	10, 15, 20, 25, 30, 35, 40	10, 15, 20, 25, 30, 35, 40

Remarks: 1. Stroke tolerance $^{+1}_{0}$ [$^{+0.039in.}_{0}$]
2. In most cases, body cutting is used for the non-standard strokes. However, body cutting is not used for strokes of less than 5mm for ϕ12～ϕ40, and strokes of less than 10mm for ϕ50～ϕ100. The collar packed is used for these cases.

Order Codes for Standard Cylinders

Operation type

DA : Double acting type
SA : Single acting push type
TA : Single acting pull type

Rod end specification

Female thread

Male thread

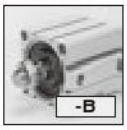

Mounting type

Basic type

Foot mounting type Note7

Flange mounting type Note6

Sensor switch type Note4
(For cylinder with magnet)

Blank:
No sensor switch

-ZE135 : With ZE135
- 2-lead wire Solid state type
- With indicator lamp
- DC10～28V
- Horizontal lead wire

-ZE155 : With ZE155
- 3-lead wire Solid state type
- With indicator lamp
- DC4.5～28V
- Horizontal lead wire

-ZE235 : With ZE235
- 2-lead wire Solid state type
- With indicator lamp
- DC10～28V
- Vertical lead wire

-ZE255 : With ZE255
- 3-lead wire Solid state type
- With indicator lamp
- DC4.5～28V
- Vertical lead wire

-ZE101 : With ZE101 Note7
- 2-lead wire Reed switch type
- Without indicator lamp
- DC5～28V AC85～115V
- Horizontal lead wire

-ZE102 : With ZE102 Note7
- 2-lead wire Reed switch type
- With indicator lamp
- DC10～28V AC85～115V
- Horizontal lead wire

-ZE201 : With ZE201 Note7
- 2-lead wire Reed switch type
- Without indicator lamp
- DC5～28V AC85～115V
- Vertical lead wire

-ZE202 : With ZE202 Note7
- 2-lead wire Reed switch type
- With indicator lamp
- DC10～28V AC85～115V
- Vertical lead wire

Lead wire length

A : 1000mm [39in.]
B : 3000mm [118in.]

Number of sensor switches
(For cylinder with magnet)
Blank:
No sensor switch

1 : With 1 sensor switch
2 : With 2 sensor switches

Cylinder specification

Blank : Standard cylinder Note1 (Non-ion specification Note8)
S : Cylinder with magnet (Non-ion specification Note8)
F : Heat resistant cylinder Note2

Bumper Note3

Blank : No bumper
-R : With bumper

Centering location Note5

Blank : No centering location
-G : With centering location

Basic type			Bore size × Stroke							
C	DA SA TA	S F	×	-B	-R	-G	-1 -3	-ZE135 -ZE155 -ZE235 -ZE255 -ZE101 -ZE102 -ZE201 -ZE202	A B	1 2 ⋮ n

- See table for bore size and stroke.
- For information regarding the cylinder joint and cylinder rod end for male thread, see p.1568.
- For the order codes of sensor switches only, see p.199.
- For heat resistant specification, sensor switch is not available.
- Mounting brackets are included at shipping. For the clevis type, see p.181, Lateral Load Resistant Cylinders.
- In sizes ϕ12 and ϕ16 with foot mounting brackets and strokes of less than 10mm, the foot mounting bracket and sensor switch may interfere with each other, which could prevent 2 sensor switches from being mounted. For details, consult us.

Notes:
1. In the standard cylinder, a magnet for the sensor switch is not built-in.
2. Not available for the cylinder with magnet or the cylinder with bumper. Not available for bore sizes ϕ6, ϕ8, and ϕ10.
3. For the double acting type only. Not available for heat resistant specification, however. Not available for bore sizes ϕ6, ϕ8, and ϕ10.
4. For details of sensor switches, see p.1544.
5. Not available for bore sizes ϕ6～ϕ12.
6. Cannot be mounted on bore size ϕ40 with centering location (**-G**). Not available for bore sizes ϕ6, ϕ8, and ϕ10.
7. Not available for bore sizes ϕ6, ϕ8, and ϕ10. And cannot be mounted on the 5mm strokes of ϕ16 and ϕ25, and 10mm strokes of ϕ50, ϕ63, and ϕ80.
8. Bore sizes ϕ6, ϕ8, and ϕ10 are not non-ion specification.

Additional Parts (To be ordered separately)

Foot mounting bracket (p.197)

Flange mounting bracket (p.198)

Mounting screws (p.209)

Inner Construction and Major Parts

● Double acting type (CDA)

● ϕ6～ϕ10

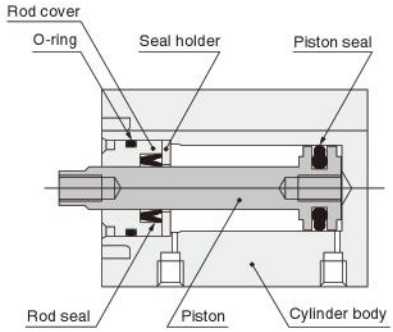

● ϕ12～ϕ40

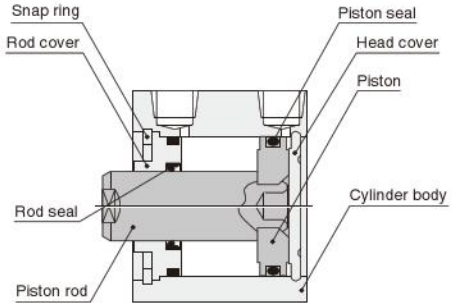

● ϕ50～ϕ100

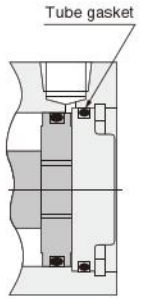

● Single acting push type (CSA)

● ϕ6～ϕ10

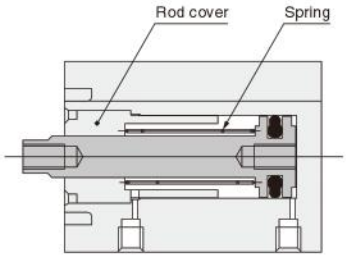

● ϕ12～ϕ50

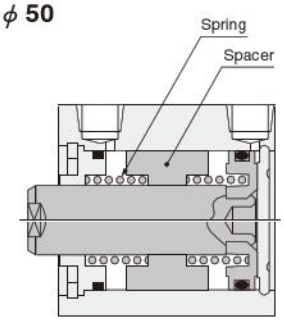

● Cylinder with magnet

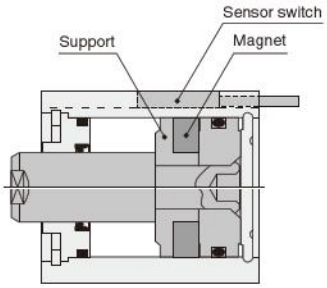

● The diagram is for ϕ12～ϕ100.

● Single acting pull type (CTA)

● ϕ6～ϕ10

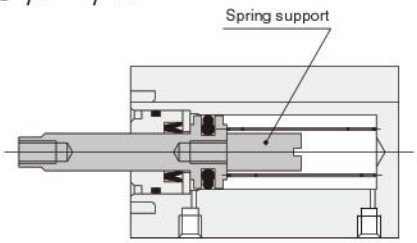

● ϕ12～ϕ50

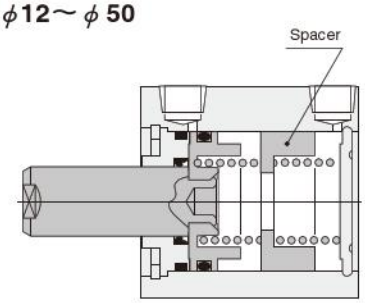

● With bumper

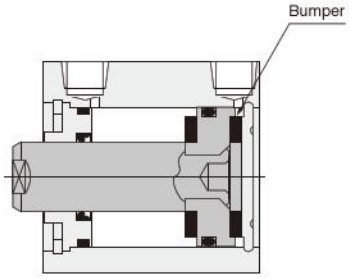

● The diagram is for ϕ12～ϕ100.

Major Parts and Materials

Parts \ Bore mm	ϕ6	ϕ8	ϕ10	ϕ12	ϕ16	ϕ20	ϕ25	ϕ32	ϕ40	ϕ50	ϕ63	ϕ80	ϕ100
Cylinder body	Aluminum alloy (anodized)												
Piston	Stainless steel			Aluminum alloy (special rust prevention treatment)									
Piston rod	—			Stainless steel (chrome plated)				Steel (chrome plated)					
Seal	Synthetic rubber (NBR)												
Rod cover	Aluminum alloy (special wear-resistant treatment)												
Head cover	—			Aluminum alloy (anodized)									
Snap ring	—			Steel (phosphate coating)									
Spring	Piano wire										—		
Spacer	—			Aluminum alloy (special rust prevention treatment)							—		
Bumper	—			Synthetic rubber (NBR; urethane for ϕ12 only)									
Magnet	Neodymium magnet			Plastic magnet									
Support	Copper alloy			Aluminum alloy (special rust prevention treatment)									

Seals

Parts / Bore mm	Rod seal	Piston seal	Tube gasket	
			Rod side	Head side
ϕ 12	MYR-6	COP-12	Y090260	None
ϕ 16	MYR-8	COP-16	Y090207	None
ϕ 20	MYR-10	COP-20(MYA-16)	Y090216	None
ϕ 25	MYR-12	COP-25(MYA-21)	Y090210	None
ϕ 32	MYR-16	COP-32	L090084	None
ϕ 40	MYR-16	COP-40	L090151	None
ϕ 50	MYR-20	COP-50	L090174	L090106
ϕ 63	MYR-20	COP-63	L090180	L090107
ϕ 80	PNY-25	COP-80	L090171	L090108
ϕ 100	PNY-32	COP-100	L090172	L090109

Note: Items in parentheses ( ) are for the single acting type.

Mass

● Double acting type

g [oz.]

Bore size mm [in.]	Zero stroke mass	Additional mass for each 1mm [0.0394in.] stroke	Additional mass of cylinder with bumper	Additional mass of cylinder with magnet	Mass of mounting bracket		Additional mass of sensor switch Note	
					Foot bracket	Flange bracket	ZE□□□A	ZE□□□B
6 [0.236]	9.2 [0.325]	0.74 [0.0261]	—	3.9 [0.138]	—	—	15 [0.53]	35 [1.23]
8 [0.315]	13.1 [0.462]	0.95 [0.0335]	—	5.4 [0.190]	—	—		
10 [0.394]	18.1 [0.638]	1.12 [0.0395]	—	6.8 [0.240]	—	—		
12 [0.472]	20.59 [0.726]	1.28 [0.0451]	6.42 [0.226]	6.59 [0.232]	50 [1.76]	55 [1.94]		
16 [0.630]	28.93 [1.020]	1.62 [0.0571]	8.08 [0.285]	9.93 [0.350]	62 [2.19]	71 [2.50]		
20 [0.787]	46.71 [1.648]	2.26 [0.0797]	11.29 [0.398]	25.71 [0.907]	84 [2.96]	101 [3.56]		
25 [0.984]	70.47 [2.486]	3.11 [0.110]	15.53 [0.548]	37.47 [1.322]	104 [3.67]	160 [5.64]		
32 [1.260]	106.43 [3.754]	4.11 [0.145]	20.57 [0.726]	52.43 [1.849]	126 [4.44]	186 [6.56]		
40 [1.575]	166.15 [5.861]	4.77 [0.168]	0	69.15 [2.439]	160 [5.64]	335 [11.82]		
50 [1.969]	271.69 [9.583]	7.03 [0.248]	0	108 [3.81]	220 [7.76]	447 [15.77]		
63 [2.480]	435.06 [15.35]	8.69 [0.307]	0	159 [5.61]	300 [10.58]	591 [20.85]		
80 [3.150]	861.44 [30.39]	13.06 [0.461]	0	245 [8.64]	644 [22.72]	1414 [49.88]		
100 [3.940]	1583.88 [55.87]	18.61 [0.656]	0	360 [12.70]	1172 [41.34]	2606 [91.92]		

Note: Sensor switch codes A and B show the lead wire lengths.
A: 1000mm [39in.] B: 3000mm [118in.]

● Single acting push type

g [oz.]

Item	Basic mass Note1								Additional mass of cylinder with magnet	Mass of mounting bracket		Additional mass of sensor switch Note2	
Bore mm \ Stroke mm	5	10	15	20	25	30	35	40		Foot bracket	Flange bracket	ZE□□□A	ZE□□□B
6	20.8 [0.734]	24.5 [0.864]	—	—	—	—	—	—	3.9 [0.138]	—	—	15 [0.53]	35 [1.23]
8	28.3 [0.998]	33.1 [1.167]	—	—	—	—	—	—	5.4 [0.190]	—	—		
10	36.2 [1.277]	41.8 [1.474]	—	—	—	—	—	—	6.8 [0.240]	—	—		
12	32.61 [1.157]	39.22 [1.383]	45.64 [1.610]	67 [2.36]	73.42 [2.590]	79.83 [2.816]	—	—	7.78 [0.274]	50 [1.76]	55 [1.94]		
16	46.6 [1.644]	54.68 [1.929]	62.75 [2.213]	91 [3.21]	99.08 [3.495]	107.15 [3.780]	—	—	10.32 [0.364]	62 [2.19]	71 [2.50]		
20	58.33 [2.057]	69.62 [2.456]	80.91 [2.854]	121 [4.27]	132.29 [4.666]	143.58 [5.065]	—	—	25.38 [0.895]	84 [2.96]	101 [3.56]		
25	86.37 [3.047]	101.9 [3.594]	117.43 [4.142]	173 [6.10]	188.53 [6.650]	204.06 [7.198]	—	—	39.1 [1.379]	104 [3.67]	160 [5.64]		
32	128.85 [4.545]	149.42 [5.271]	169.99 [5.996]	276 [9.74]	296.57 [10.461]	317.14 [11.187]	—	—	50.58 [1.784]	126 [4.44]	186 [6.56]		
40	190.73 [6.728]	214.58 [7.569]	238.43 [8.410]	373 [13.16]	396.85 [13.998]	420.7 [14.84]	—	—	69.42 [2.449]	160 [5.64]	335 [11.82]		
50	—	343.95 [12.132]	379.11 [13.372]	414.26 [14.61]	582 [20.53]	617.16 [21.769]	652.31 [23.009]	687.47 [24.249]	106.05 [3.741]	220 [7.76]	447 [15.77]		

Notes: 1. The above table is for the standard strokes.
2. Sensor switch codes A and B show the lead wire lengths.
A: 1000mm [39in.] B: 3000mm [118in.]

● Single acting pull type

g [oz.]

Item	Basic mass Note1								Additional mass of cylinder with magnet	Mass of mounting bracket		Additional mass of sensor switch Note2	
Bore mm \ Stroke mm	5	10	15	20	25	30	35	40		Foot bracket	Flange bracket	ZE□□□A	ZE□□□B
6	20.5 [0.723]	24.2 [0.854]	—	—	—	—	—	—	3.9 [0.138]	—	—	15 [0.53]	35 [1.23]
8	27.6 [0.974]	32.4 [1.143]	—	—	—	—	—	—	5.5 [0.194]	—	—		
10	35.1 [1.238]	40.7 [1.436]	—	—	—	—	—	—	6.7 [0.236]	—	—		
12	32.03 [1.130]	38.44 [1.356]	44.86 [1.582]	64 [2.26]	70.42 [2.484]	76.83 [2.710]	—	—	8.56 [0.302]	50 [1.76]	55 [1.94]		
16	45.55 [1.607]	53.63 [1.892]	61.7 [2.176]	86 [3.03]	94.08 [3.319]	102.15 [3.603]	—	—	11.37 [0.401]	62 [2.19]	71 [2.50]		
20	68.4 [2.413]	79.69 [2.811]	90.98 [3.209]	125 [4.41]	136.29 [4.807]	147.58 [5.206]	—	—	26.31 [0.928]	84 [2.96]	101 [3.56]		
25	100.02 [3.528]	115.55 [4.076]	131.08 [4.623]	178 [6.28]	193.53 [6.826]	209.06 [7.374]	—	—	38.45 [1.356]	104 [3.67]	160 [5.64]		
32	144.73 [5.105]	165.3 [5.831]	185.87 [6.556]	269 [9.49]	289.57 [10.214]	310.14 [10.940]	—	—	51.71 [1.824]	126 [4.44]	186 [6.56]		
40	215.24 [7.592]	239.09 [8.434]	262.94 [9.275]	374 [13.19]	397.85 [14.034]	421.7 [14.875]	—	—	67.91 [2.395]	160 [5.64]	335 [11.82]		
50	—	378.94 [13.366]	414.1 [14.61]	449.25 [15.847]	580 [20.46]	615.16 [21.699]	650.31 [22.939]	685.47 [24.179]	70.06 [2.471]	220 [7.76]	447 [15.77]		

Notes: 1. The above table is for the standard strokes.
2. Sensor switch codes A and B show the lead wire lengths.
A: 1000mm [39in.] B: 3000mm [118in.]

Calculation example: For the mass of a double acting type cylinder with magnet, bore size of 25mm, stroke of 30mm, and with 2 sensor switches (**ZE135A**)
70.47+(3.11×30)+37.47+(15×2)=231.24g [8.157oz.]

Dimensions of Standard Cylinder Double Acting Type (mm)

●φ6～φ25

CDA Bore size

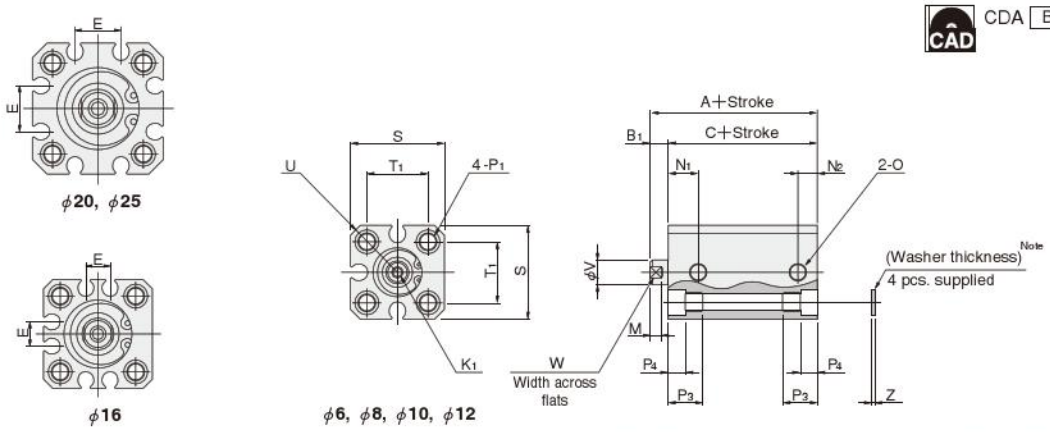

Note: Bore sizes φ6, φ8, and φ10 are not available with washers.
● The drawing is for φ12.

●φ32～φ100

CDA Bore size

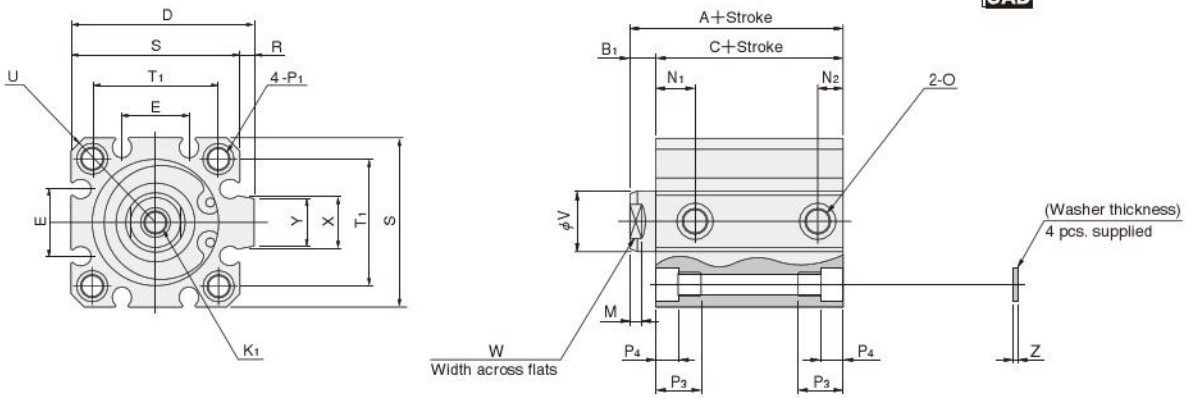

Type / Bore mm [in.] / Code	Standard cylinder (CDA)			Cylinder with magnet (CDAS)			Standard cylinder with bumper (CDA-R)			Cylinder with magnet and bumper (CDAS-R)			D	E	K1	M	N1	N2
	A	B1	C	A	B1	C	A	B1	C	A	B1	C						
6 [0.236]	19	5	14	24	5	19	—	—	—	—	—	—	—	—	M2.5X0.45 Depth5	3	6.5	3.5
8 [0.315]	20	5	15	25	5	20	—	—	—	—	—	—	—	—	M3X0.5 Depth5	3	7.5	3.5
10 [0.394]	21	5	16	26	5	21	—	—	—	—	—	—	—	—	M3X0.5 Depth5	3	8	4
12 [0.472]	22	5	17	27	5	22	27	5	22	32	5	27	—	—	M3X0.5 Depth6	3.5	8	5
16 [0.630]	22.5	5.5	17	27.5	5.5	22	27.5	5.5	22	32.5	5.5	27	—	6.2	M4X0.7 Depth8	3.5	8	5
20 [0.787]	25	5.5	19.5	35	5.5	29.5	30	5.5	24.5	40	5.5	34.5	—	12.2	M5X0.8 Depth10	4.5	9.5	5
25 [0.984]	27	6	21	37	6	31	32	6	26	42	6	36	—	12.2	M6X1 Depth10	5	10.5	5
32 [1.260]	30	7	23	40	7	33	35	7	28	40	7	33	48.5	18.2	M8X1.25 Depth12	6	9.5	7.5〔6〕
40 [1.575]	33	7	26	43	7	36	33	7	26	43	7	36	56.5	18.2	M8X1.25 Depth12	6	10.5	7.5
50 [1.969]	37	9	28	47	9	38	37	9	28	47	9	38	70	24.8	M10X1.5 Depth15	7	11	9.5
63 [2.480]	41	9	32	51	9	42	41	9	32	51	9	42	83	26.8	M10X1.5 Depth15	7	12.5	11
80 [3.150]	52	11	41	62	11	51	52	11	41	62	11	51	102	32.8	M14X2 Depth20	9	18	12
100 [3.940]	63	12	51	73	12	61	63	12	51	73	12	61	122	32.8	M18X2.5 Depth20	9	22.5	16.5

Bore mm [in.] / Type	O	P1	P3	P4	R	S	T1	U	V	W	X	Y	Z	Appropriate through bolt
6 [0.236]	M3X0.5	φ3.3 (Thru hole) C'bore φ6 (Both sides) and M4X0.7 (Both sides)	9.5	3.5	—	19	11	R12	4	3.5	—	—	—	M3
8 [0.315]	M3X0.5	φ3.3 (Thru hole) C'bore φ6.2 (Both sides) and M4X0.7 (Both sides)	9.5	3.5	—	21	13	R13.5	5	4	—	—	—	M3
10 [0.394]	M3X0.5	φ3.3 (Thru hole) C'bore φ6.2 (Both sides) and M4X0.7 (Both sides)	9.5	3.5	—	23	15	R15	5	4	—	—	—	M3
12 [0.472]	M5X0.8	φ4.3 (Thru hole) C'bore φ6.5 (Both sides) and M5X0.8 (Both sides)	9.5	4.5	—	25	16.3	R16	6	5	—	—	1	M3
16 [0.630]	M5X0.8	φ4.3 (Thru hole) C'bore φ6.5 (Both sides) and M5X0.8 (Both sides)	9.5	4.5	—	29	19.8	R19	8	6	—	—	1	M3
20 [0.787]	M5X0.8	φ4.3 (Thru hole) C'bore φ6.5 (Both sides) and M5X0.8 (Both sides)	9.5	4.5	—	34	24	R22	10	8	—	—	1	M3
25 [0.984]	M5X0.8	φ5.1 (Thru hole) C'bore φ8 (Both sides) and M6X1 (Both sides)	11.5	5.5	—	40	28	R25	12	10	—	—	1	M4
32 [1.260]	Rc1/8	φ5.1 (Thru hole) C'bore φ8 (Both sides) and M6X1 (Both sides)	11.5	5.5	4.5	44	34	R29.5	16	14	15	13.6	1	M4
40 [1.575]	Rc1/8	φ6.9 (Thru hole) C'bore φ9.5 (Both sides) and M8X1.25 (Both sides)	15.5	7.5	4.5	52	40	R35	16	14	15	13.6	1.6	M5
50 [1.969]	Rc1/4	φ6.9 (Thru hole) C'bore φ11 (Both sides) and M8X1.25 (Both sides)	16.5	8.5	8	62	48	R41	20	17	21.6	19	1.6	M6
63 [2.480]	Rc1/4	φ6.9 (Thru hole) C'bore φ11 (Both sides) and M8X1.25 (Both sides)	16.5	8.5	8	75	60	R50	20	17	21.6	19	1.6	M6
80 [3.150]	Rc3/8	φ10.5 (Thru hole) C'bore φ14 (Both sides) and M12X1.75 (Both sides)	22.5	10.5	8	94	74	R62	25	22	27.6	25	1.6	M8
100 [3.940]	Rc3/8	φ12.3 (Thru hole) C'bore φ17.5 (Both sides) and M14X2 (Both sides)	27	13	8	114	90	R75	32	27	27.6	25	2	M10

Note: Figure in parentheses 〔 〕 is for the standard cylinder (**CDA**) with 5mm stroke.
Remark: If using a through bolt to directly mount the body in place, see p.205.

Dimensions of Standard Cylinder Single Acting Push Type (mm)

●φ6～φ25

CSA Bore size

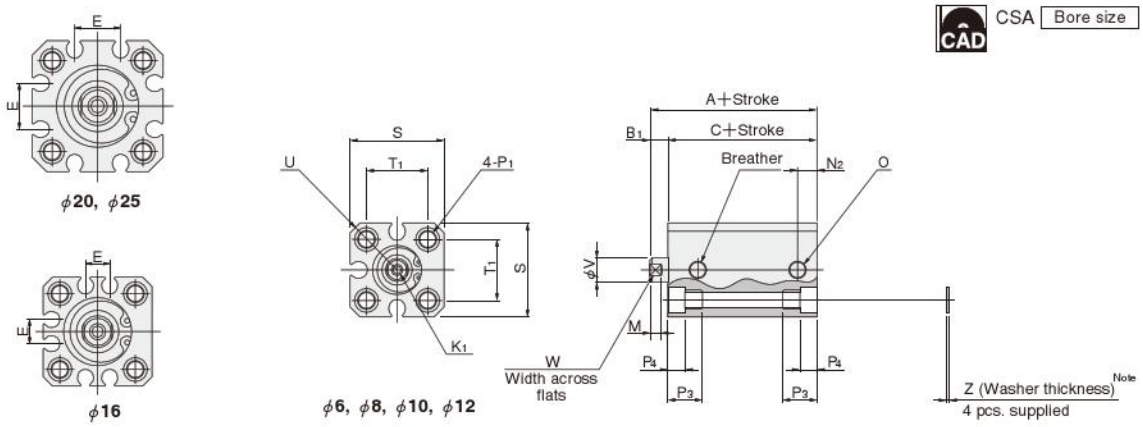

Note: Bore sizes φ6, φ8, and φ10 are not available with washers.
● The drawing is for φ12.

●φ32～φ50

CSA Bore size

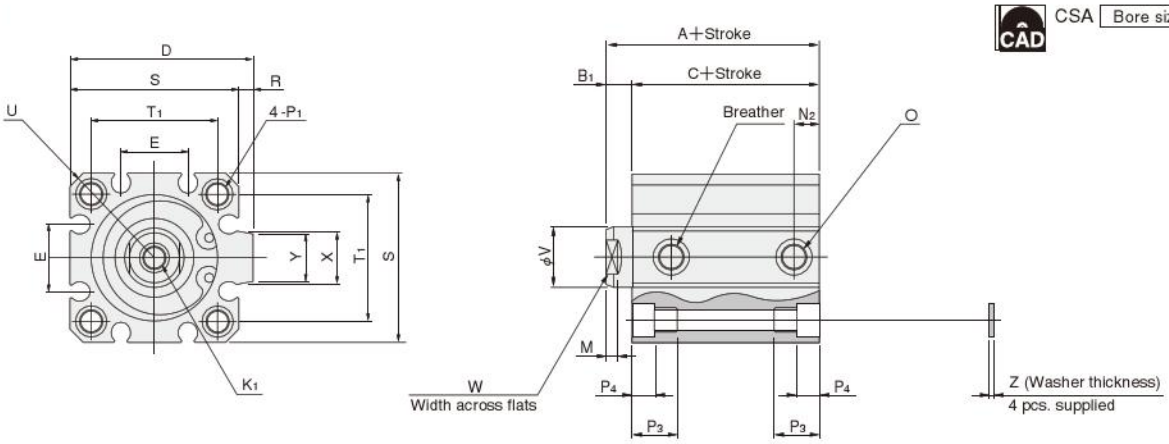

Type / Stroke / Bore mm [in.] Code	Standard cylinder (CSA)						Cylinder with magnet (CSAS)						D	E	K1	M	N2	O
	5～15 (φ50: 10～20)			16～30 (φ50: 21～40)			5～15 (φ50: 10～20)			16～30 (φ50: 21～40)								
	A	B1	C	A	B1	C	A	B1	C	A	B1	C						
6 [0.236]	29	5	24	—	—	—	34	5	29	—	—	—	—	—	M2.5X0.45 Depth5	3	3.5	M3X0.5
8 [0.315]	30	5	25	—	—	—	35	5	30	—	—	—	—	—	M3X0.5 Depth5	3	3.5	M3X0.5
10 [0.394]	31	5	26	—	—	—	36	5	31	—	—	—	—	—	M3X0.5 Depth5	3	4	M3X0.5
12 [0.472]	27	5	22	37	5	32	32	5	27	42	5	37	—	—	M3X0.5 Depth6	3.5	5	M5X0.8
16 [0.630]	27.5	5.5	22	37.5	5.5	32	32.5	5.5	27	42.5	5.5	37	—	6.2	M4X0.7 Depth8	3.5	5	M5X0.8
20 [0.787]	25	5.5	19.5	35	5.5	29.5	35	5.5	29.5	45	5.5	39.5	—	12.2	M5X0.8 Depth10	4.5	5	M5X0.8
25 [0.984]	27	6	21	37	6	31	37	6	31	47	6	41	—	12.2	M6X1 Depth10	5	5	M5X0.8
32 [1.260]	30	7	23	45	7	38	40	7	33	55	7	48	48.5	18.2	M8X1.25 Depth12	6	7.5〔6〕	Rc1/8
40 [1.575]	33	7	26	48	7	41	43	7	36	58	7	51	56.5	18.2	M8X1.25 Depth12	6	7.5	Rc1/8
50 [1.969]	37	9	28	52	9	43	47	9	38	62	9	53	70	24.8	M10X1.5 Depth15	7	9.5	Rc1/4

Bore mm [in.] Code	P1	P3	P4	R	S	T1	U	V	W	X	Y	Z	Appropriate through bolt※
6 [0.236]	φ3.3 (Thru hole) C'bore φ6 (Both sides) and M4X0.7 (Both sides)	9.5	3.5	—	19	11	R12	4	3.5	—	—	—	M3
8 [0.315]	φ3.3 (Thru hole) C'bore φ6.2 (Both sides) and M4X0.7 (Both sides)	9.5	3.5	—	21	13	R13.5	5	4	—	—	—	M3
10 [0.394]	φ3.3 (Thru hole) C'bore φ6.2 (Both sides) and M4X0.7 (Both sides)	9.5	3.5	—	23	15	R15	5	4	—	—	—	M3
12 [0.472]	φ4.3 (Thru hole) C'bore φ6.5 (Both sides) and M5X0.8 (Both sides)	9.5	4.5	—	25	16.3	R16	6	5	—	—	1	M3
16 [0.630]	φ4.3 (Thru hole) C'bore φ6.5 (Both sides) and M5X0.8 (Both sides)	9.5	4.5	—	29	19.8	R19	8	6	—	—	1	M3
20 [0.787]	φ4.3 (Thru hole) C'bore φ6.5 (Both sides) and M5X0.8 (Both sides)	9.5	4.5	—	34	24	R22	10	8	—	—	1	M3
25 [0.984]	φ5.1 (Thru hole) C'bore φ8 (Both sides) and M6X1 (Both sides)	11.5	5.5	—	40	28	R25	12	10	—	—	1	M4
32 [1.260]	φ5.1 (Thru hole) C'bore φ8 (Both sides) and M6X1 (Both sides)	11.5	5.5	4.5	44	34	R29.5	16	14	15	13.6	1	M4
40 [1.575]	φ6.9 (Thru hole) C'bore φ9.5 (Both sides) and M8X1.25 (Both sides)	15.5	7.5	4.5	52	40	R35	16	14	15	13.6	1.6	M5
50 [1.969]	φ6.9 (Thru hole) C'bore φ11 (Both sides) and M8X1.25 (Both sides)	16.5	8.5	8	62	48	R41	20	17	21.6	19	1.6	M6

Note: Figure in parentheses 〔 〕 is for the standard cylinder (**CSA**) with 5mm stroke.
Remark: If using a through bolt to directly mount the body in place, see p.205.
※Some types of mounting screws are available (to be ordered separately). See p.209.

Dimensions of Standard Cylinder Single Acting Pull Type (mm)

●φ6～φ25

CTA Bore size

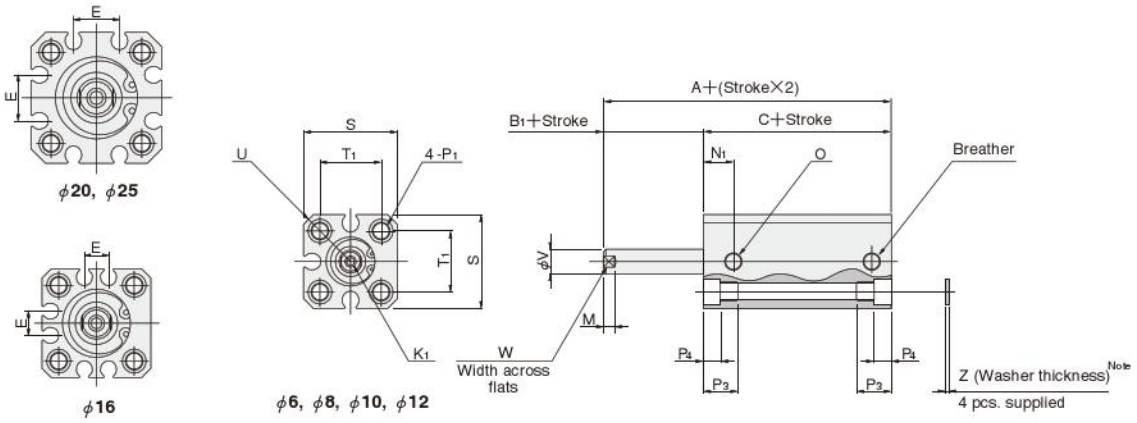

Note: Bore sizes φ6, φ8, and φ10 are not available with washers.
● The drawing is for φ12.

●φ32～φ50

CTA Bore size

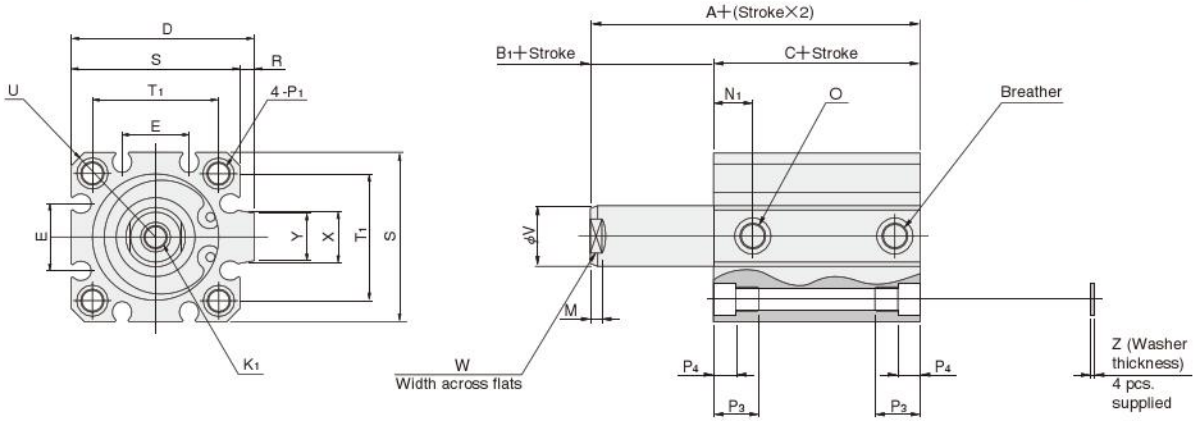

Type / Stroke / Bore mm [in.] Code	Standard cylinder (CTA)						Cylinder with magnet (CTAS)						D	E	K1	M	N1	O
	5～15 (φ50: 10～20)※1			16～30 (φ50: 21～40)			5～15 (φ50: 10～20)※1			16～30 (φ50: 21～40)								
	A	B1	C	A	B1	C	A	B1	C	A	B1	C						
6 [0.236]	29	5	24	—	—	—	34	5	29	—	—	—	—	—	M2.5×0.45 Depth5	3	6.5	M3×0.5
8 [0.315]	30	5	25	—	—	—	35	5	30	—	—	—	—	—	M3×0.5 Depth5	3	7.5	M3×0.5
10 [0.394]	31	5	26	—	—	—	36	5	31	—	—	—	—	—	M3×0.5 Depth5	3	8	M3×0.5
12 [0.472]	27	5	22	37	5	32	32	5	27	42	5	37	—	—	M3×0.5 Depth6	3.5	8	M5×0.8
16 [0.630]	27.5	5.5	22	37.5	5.5	32	32.5	5.5	27	42.5	5.5	37	—	6.2	M4×0.7 Depth8	3.5	8	M5×0.8
20 [0.787]	30	5.5	24.5	40	5.5	34.5	40	5.5	34.5	50	5.5	44.5	—	12.2	M5×0.8 Depth10	4.5	9.5	M5×0.8
25 [0.984]	32	6	26	42	6	36	42	6	36	52	6	46	—	12.2	M6×1 Depth10	5	10.5	M5×0.8
32 [1.260]	35	7	28	50	7	43	45	7	38	60	7	53	48.5	18.2	M8×1.25 Depth12	6	9.5	Rc1/8
40 [1.575]	38	7	31	53	7	46	48	7	41	63	7	56	56.5	18.2	M8×1.25 Depth12	6	10.5	Rc1/8
50 [1.969]	37	9	28	52	9	43	47	9	38	62	9	53	70	24.8	M10×1.5 Depth15	7	11	Rc1/4

Code / Bore mm [in.]	P1	P3	P4	R	S	T1	U	V	W	X	Y	Z	Appropriate through bolt※2
6 [0.236]	φ3.3 (Thru hole) C'bore φ6 (Both sides) and M4×0.7 (Both sides)	9.5	3.5	—	19	11	R12	4	3.5	—	—	—	M3
8 [0.315]	φ3.3 (Thru hole) C'bore φ6.2 (Both sides) and M4×0.7 (Both sides)	9.5	3.5	—	21	13	R13.5	5	4	—	—	—	M3
10 [0.394]	φ3.3 (Thru hole) C'bore φ6.2 (Both sides) and M4×0.7 (Both sides)	9.5	3.5	—	23	15	R15	5	4	—	—	—	M3
12 [0.472]	φ4.3 (Thru hole) C'bore φ6.5 (Both sides) and M5×0.8 (Both sides)	9.5	4.5	—	25	16.3	R16	6	5	—	—	1	M3
16 [0.630]	φ4.3 (Thru hole) C'bore φ6.5 (Both sides) and M5×0.8 (Both sides)	9.5	4.5	—	29	19.8	R19	8	6	—	—	1	M3
20 [0.787]	φ4.3 (Thru hole) C'bore φ6.5 (Both sides) and M5×0.8 (Both sides)	9.5	4.5	—	34	24	R22	10	8	—	—	1	M3
25 [0.984]	φ5.1 (Thru hole) C'bore φ8 (Both sides) and M6×1 (Both sides)	11.5	5.5	—	40	28	R25	12	10	—	—	1	M4
32 [1.260]	φ5.1 (Thru hole) C'bore φ8 (Both sides) and M6×1 (Both sides)	11.5	5.5	4.5	44	34	R29.5	16	14	15	13.6	1	M4
40 [1.575]	φ6.9 (Thru hole) C'bore φ9.5 (Both sides) and M8×1.25 (Both sides)	15.5	7.5	4.5	52	40	R35	16	14	15	13.6	1.6	M5
50 [1.969]	φ6.9 (Thru hole) C'bore φ11 (Both sides) and M8×1.25 (Both sides)	16.5	8.5	8	62	48	R41	20	17	21.6	19	1.6	M6

Remark: If using a through bolt to directly mount the body in place, see p.205.
※ 1. Bore sizes φ6, φ8, and φ10 are 5～10 strokes.
2. Some types of mounting screws are available (to be ordered separately). See p.209.

Dimensions of Male Rod End Thread Specification (mm)

CAD Available in the file of each cylinder body.

● Double acting type, Single acting push type, Single acting pull type

● ϕ6～ϕ25

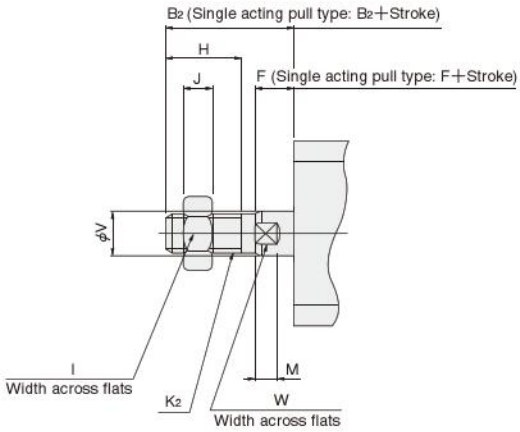

● ϕ32～ϕ100
(Single acting type available up to ϕ50)

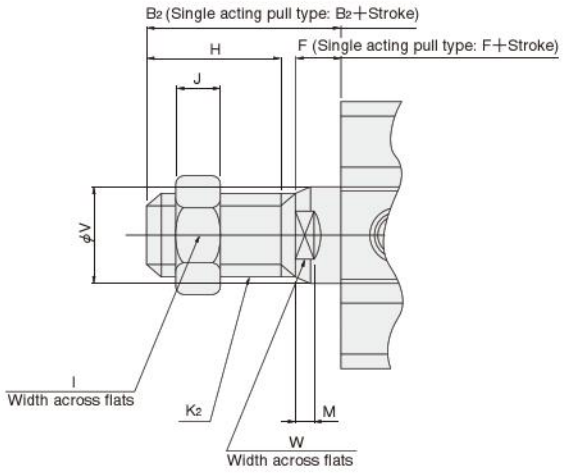

Bore mm [in.] \ Code	B2	F	H	I	J	K2	M	V	W
6 [0.236]	15	5	8	5.5	1.8	M3×0.5	3	4	3.5
8 [0.315]	15	5	8	7	2.4	M4×0.7	3	5	4
10 [0.394]	15	5	8	7	2.4	M4×0.7	3	5	4
12 [0.472]	17	5	10	8	4	M5×0.8	3.5	6	5
16 [0.630]	20.5	5.5	13	10	5	M6×1	3.5	8	6
20 [0.787]	22.5	5.5	15	12	5	M8×1	4.5	10	8
25 [0.984]	24	6	15	14	6	M10×1.25	5	12	10
32 [1.260]	35	7	25	19	8	M14×1.5	6	16	14
40 [1.575]	35	7	25	19	8	M14×1.5	6	16	14
50 [1.969]	37	9	25	27	11	M18×1.5	7	20	17
63 [2.480]	37	9	25	27	11	M18×1.5	7	20	17
80 [3.150]	44	11	30	32	13	M22×1.5	9	25	22
100 [3.940]	50	12	35	36	14	M26×1.5	9	32	27

Remark: Cylinder joints and cylinder rod ends are available for mounting with the rod end male thread specification. For details, see p.1568.

Dimensions of Centering Location (mm)

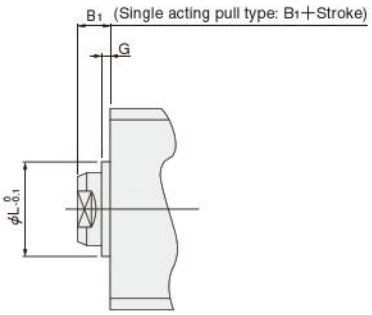

Bore mm [in.] \ Code	B1	G	L
16 [0.630]	5.5	1.5	9.4
20 [0.787]	5.5	1.5	12
25 [0.984]	6	2	15
32 [1.260]	7	2	21
40 [1.575]	7	2	29
50 [1.969]	9	2	38
63 [2.480]	9	2	40
80 [3.150]	11	2	45
100 [3.940]	12	2	55

●Not available for bore sizes ϕ6, ϕ8, ϕ10 and ϕ12.

JIG CYLINDERS C SERIES NON-ROTATING CYLINDERS

Double Acting Type

Symbol

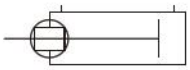

Specifications

Item / Bore size mm [in.]	6 [0.236]	8 [0.315]	10 [0.394]
Operation type	Double acting type		
Media	Air		
Operating pressure range MPa [psi.]	0.15～0.9 [22～131]		
Proof pressure MPa[psi.]	1.35 [196]		
Operating temperature range °C [°F]	0～60 [32～140]		
Operating speed range mm/s [in./sec.]	50～500 [2.0～19.7]		
Cushion	—		
Lubrication	Not required (If lubrication is required, use Turbine Oil Class 1 [**ISO VG32**] or equivalent.)		
Non-rotating accuracy	±2°	±1.6°	±1.4°
Port size	M3×0.5		

Remark: For Handling Instructions and Precautions, see p.205.

Bore Size and Stroke

For non-standard strokes, see p.206.

mm

Bore size	Standard strokes	
	Standard cylinder	Cylinder with magnet
6	5, 10	5, 10
8		
10		

Remark: Stroke tolerance $^{+1}_{0}$ [$^{+0.039}_{0}$in.]

Order Codes for Non-rotating Cylinders

Operation type

DA : Double acting type

Rod end specification

Female thread

Male thread

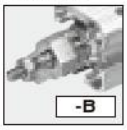

Sensor switch type Note2
(For cylinder with magnet)

Blank:
No sensor switch

-ZE135 : With ZE135
- 2-lead wire Solid state type
- With indicator lamp
- DC10～28V
- Horizontal lead wire

-ZE235 : With ZE235
- 2-lead wire Solid state type
- With indicator lamp
- DC10～28V
- Vertical lead wire

-ZE155 : With ZE155
- 3-lead wire Solid state type
- With indicator lamp
- DC4.5～28V
- Horizontal lead wire

-ZE255 : With ZE255
- 3-lead wire Solid state type
- With indicator lamp
- DC4.5～28V
- Vertical lead wire

Lead wire length

A : 1000mm [39in.]
B : 3000mm [118in.]

Number of sensor switches
(For cylinder with magnet)
Blank:
No sensor switch

1 : With 1 sensor switch
2 : With 2 sensor switches

Non-rotating cylinder

Cylinder specification

Blank : Standard cylinder Note1
S : Cylinder with magnet

Basic type				Bore size × Stroke				
C	DA	L	S	×	-B	-ZE135 -ZE155 -ZE235 -ZE255	A B	1 2 ⋮ n

- See table for bore size and stroke.
- For information regarding the cylinder joint and cylinder rod end for male thread, see p.1568.
- For the order codes of sensor switches only, see p.199.

Notes: 1. In the standard cylinder, a magnet for the sensor switch is not built-in.
2. For details of sensor switches, see p.1544.

Inner Construction and Major Parts

● Double acting type

● ϕ6～ϕ10

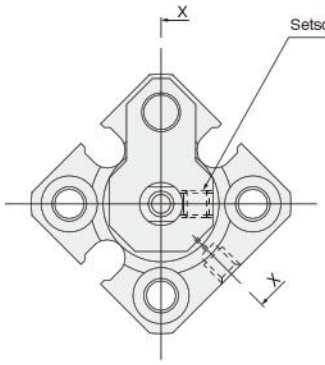

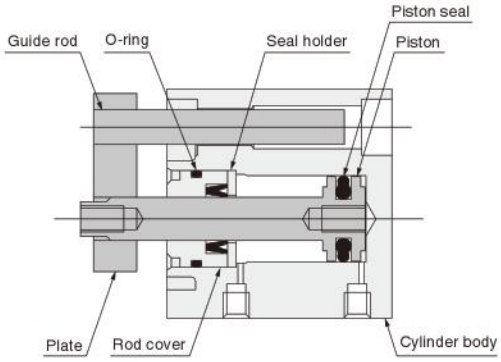

X-X cross section

● Cylinder with magnet

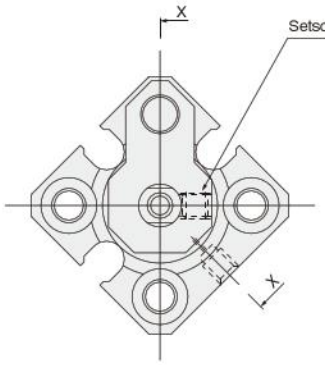

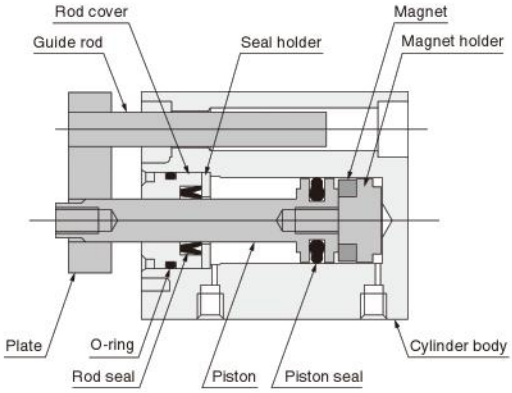

X-X cross section

Major Parts and Materials

Parts \ Bore mm	ϕ6～ϕ10
Cylinder body	Aluminum alloy (anodized)
Piston	Stainless steel
Seal	Synthetic rubber (NBR)
Seal holder	Copper alloy
Rod cover	Aluminum alloy (special wear resistant treatment)
Plate	Copper alloy (nickel plated)
Setscrew	Steel
Magnet	Neodymium magnet
Magnet holder	Copper alloy
Guide rod	Stainless steel

Mass

g [oz.]

Bore size mm [in.]	Basic mass Note1		Mass with sensor		Additional mass of sensor switch Note2	
	5mm stroke	10mm stroke	5mm stroke	10mm stroke	ZE□□□A	ZE□□□B
6 [0.236]	19.8 [0.698]	23.4 [0.825]	23.1 [0.815]	27.1 [0.956]	15 [0.53]	35 [1.23]
8 [0.315]	26.4 [0.931]	31.1 [1.097]	31.2 [1.101]	36.3 [1.280]		
10 [0.394]	33.7 [1.189]	39.2 [1.383]	39.9 [1.407]	45.9 [1.619]		

Notes: 1. The above table is for the standard strokes.
2. Sensor switch codes A and B show the lead wire lengths.
A: 1000mm [39in.] B: 3000mm [118in.]

Calculation example: For the mass of a double acting type cylinder with magnet, bore size of 8mm, stroke of 10mm, and with 2 sensor switches (**ZE135A**)
36.3＋(15×2)＝66.3g [2.339oz.]

Dimensions of Non-rotating Cylinder Double Acting Type (mm)

● ϕ6～ϕ10

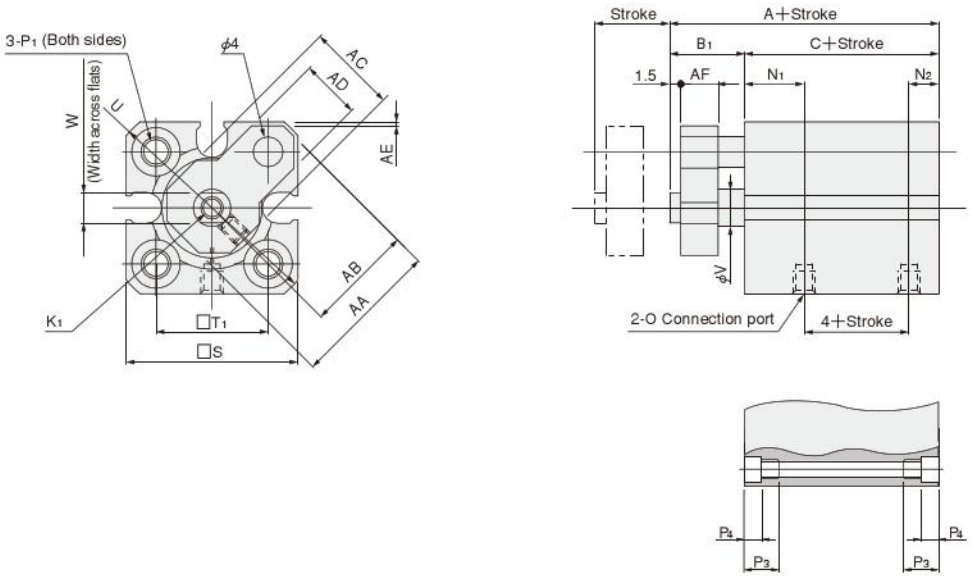

Type / Bore mm [in.] / Code	Standard cylinder (CDAL)			Cylinder with magnet (CDALS)			K_1	N_1	N_2	O	P_1
	A	B_1	C	A	B_1	C					
6 [0.236]	24	10	14	29	10	19	M2.5×0.45 Depth5	6.5	3.5	M3×0.5	ϕ3.3 (Thru hole) C'bore ϕ6 (Both sides) and M4×0.7 (Both sides)
8 [0.315]	25	10	15	30	10	20	M3×0.5 Depth5	7.5	3.5	M3×0.5	ϕ3.3 (Thru hole) C'bore ϕ6.2 (Both sides) and M4×0.7 (Both sides)
10 [0.394]	26	10	16	31	10	21	M3×0.5 Depth5	8	4	M3×0.5	ϕ3.3 (Thru hole) C'bore ϕ6.2 (Both sides) and M4×0.7 (Both sides)

Bore mm [in.] / Code	P_3	P_4	S	T_1	U	V	W	Appropriate through bolt	AA	AB	AC	AD	AE	AF
6 [0.236]	9.5	3.5	19	11	R12	4	3.5	M3	15	11.5	9.5	7	0.3	5
8 [0.315]	9.5	3.5	21	13	R13.5	5	4	M3	17	12.5	11	7	0.6	5
10 [0.394]	9.5	3.5	23	15	R15	5	4	M3	20	14.5	12	8	0.5	5

Dimensions of Male Rod End Thread Specification (mm)

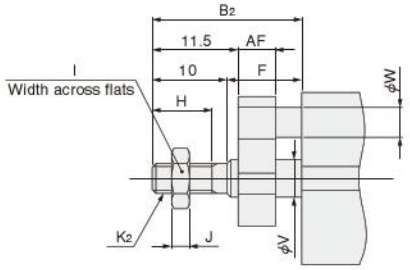

Bore mm [in.] / Code	B_2	F	H	I	J	K_2	V	W	AF
6 [0.236]	20	10	8	5.5	1.8	M3×0.5	4	4	5
8 [0.315]	20	10	8	7	2.4	M4×0.7	5	4	5
10 [0.394]	20	10	8	7	2.4	M4×0.7	5	4	5

Remark: Cylinder joints and cylinder rod ends are available for mounting with the rod end male thread specification. For details, see p.1568.

JIG CYLINDERS C SERIES SQUARE ROD CYLINDERS

Double Acting Type

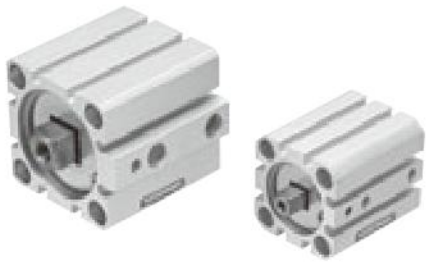

Symbol

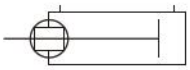

Specifications

Item / Bore size mm [in.]	20 [0.787]	25 [0.984]	32 [1.260]	40 [1.575]	50 [1.969]	63 [2.480]
Operation type	Double acting type					
Media	Air					
Operating pressure range MPa [psi.]	0.1～1.0 [15～145]					
Proof pressure MPa [psi.]	1.5 [218]					
Operating temperature range °C [°F]	0～60 [32～140]					
Operating speed range mm/s [in./sec.]	30～500 [1.2～19.7]				30～300 [1.2～11.8]	
Cushion	Rubber bumper (Optional)					
Lubrication	Not required (If lubrication is required, use Turbine Oil Class 1 [**ISO VG32**] or equivalent.)					
Non-rotating accuracy	±1.5°		±0.8°		±0.6°	
Allowable torque Note N·cm [in·lbf]	2 [0.18]	2.4 [0.21]		4.4 [0.39]		
Port size	M5×0.8		Rc1/8		Rc1/4	

Remark: For Handling Instructions and Precautions, see p.205.
Note: Maximum torque allowed on piston rod.

Bore Size and Stroke

For non-standard strokes, see p.206.

mm

Bore size	Standard strokes	
	Standard cylinder	Cylinder with magnet
20	5, 10, 15, 20, 25, 30, 35, 40, 45, 50	5, 10, 15, 20, 25, 30, 35, 40, 45, 50
25		
32	5, 10, 15, 20, 25, 30, 35, 40, 45, 50, 75, 100	5, 10, 15, 20, 25, 30, 35, 40, 45, 50, 75, 100
40		
50	10, 15, 20, 25, 30, 35, 40, 45, 50, 75, 100	10, 15, 20, 25, 30, 35, 40, 45, 50, 75, 100
63		

Remarks: 1. Stroke tolerance $^{+1}_{0}$ [$^{+0.039in.}_{0}$]
2. In most cases, body cutting is used for the non-standard strokes.
However, body cutting is not used for strokes of less than 5mm for ϕ12～ϕ40, and strokes of less than 10mm for ϕ50 and ϕ63. The collar packed is used for these cases.

Order Codes for Square Rod Cylinders

Operation type

DA : Double acting type

Rod end specification

Female thread

Male thread

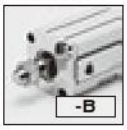

Mounting type

Basic type

Foot mounting type

Flange mounting type Note2

Sensor switch type Note3
(For cylinder with magnet)

Blank:
No sensor switch

-ZE135 : With ZE135
- 2-lead wire Solid state type
- With indicator lamp
- DC10～28V
- Horizontal lead wire

-ZE155 : With ZE155
- 3-lead wire Solid state type
- With indicator lamp
- DC4.5～28V
- Horizontal lead wire

-ZE235 : With ZE235
- 2-lead wire Solid state type
- With indicator lamp
- DC10～28V
- Vertical lead wire

-ZE255 : With ZE255
- 3-lead wire Solid state type
- With indicator lamp
- DC4.5～28V
- Vertical lead wire

-ZE101 : With ZE101
- 2-lead wire Reed switch type
- Without indicator lamp
- DC5～28V AC85～115V
- Horizontal lead wire

-ZE102 : With ZE102
- 2-lead wire Reed switch type
- With indicator lamp
- DC10～28V AC85～115V
- Horizontal lead wire

-ZE201 : With ZE201
- 2-lead wire Reed switch type
- Without indicator lamp
- DC5～28V AC85～115V
- Vertical lead wire

-ZE202 : With ZE202
- 2-lead wire Reed switch type
- With indicator lamp
- DC10～28V AC85～115V
- Vertical lead wire

Lead wire length

A : 1000mm [39in.]
B : 3000mm [118in.]

Number of sensor switches
(For cylinder with magnet)
Blank:
No sensor switch

1 : With 1 sensor switch
2 : With 2 sensor switches

Square rod cylinder

Cylinder specification

Blank : Standard cylinder Note1
S : Cylinder with magnet

Bumper

Blank : No bumper
-R : With bumper

Centering location

Blank : No centering location
-G : With centering location

Basic type				Bore size × Stroke							
C	DA	L	S	×	-B	-R	-G	-1 -3	-ZE135 -ZE155 -ZE235 -ZE255 -ZE101 -ZE102 -ZE201 -ZE202	A B	1 2 ⋮ n

- See table for bore size and stroke.
- For information regarding the cylinder joint and cylinder rod end for male thread, see p.1568.
- Mounting brackets are included at shipping.
- For the order codes of sensor switches only, see p.199.

Notes: 1. In the standard cylinder, a magnet for the sensor switch is not built-in.
2. When using with a centering location (**-G**), the flange mounting bracket can be mounted on the head side only.
3. For details of sensor switches, see p.1544.

Additional Parts (To be ordered separately)

Foot mounting bracket (p.197)

Flange mounting bracket (p.198)

Mounting screws (p.209)

Inner Construction and Major Parts

● Double acting type

● ϕ20～ϕ40

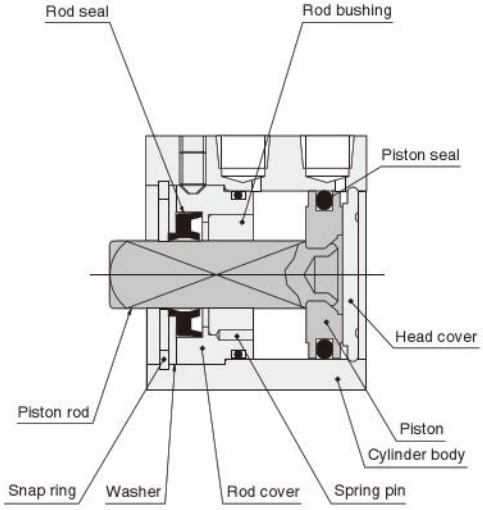

● ϕ50, ϕ63

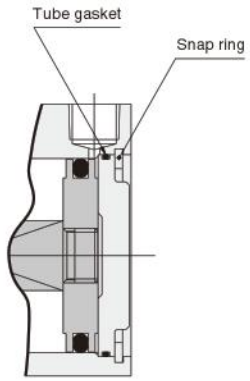

● Cylinder with magnet

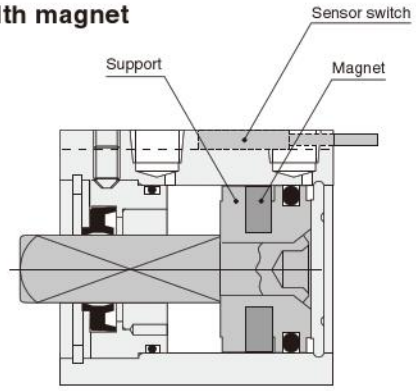

● With bumper

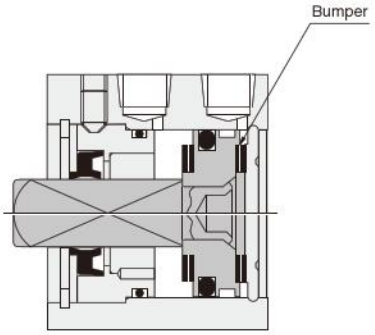

Major Parts and Materials

Parts / Bore mm	ϕ 20～ϕ 63
Cylinder body	Aluminum alloy (anodized)
Piston	Aluminum alloy (special rust prevention treatment)
Piston rod	Steel (chrome plated)
Seal	Synthetic rubber (NBR; urethane for the rod seal)
Rod bushing	Oil impregnated bronze
Rod cover	Aluminum alloy (anodized)
Head cover	Aluminum alloy (anodized)
Spring pin	Steel
Washer	Steel (nickel plated)
Snap ring	Steel (phosphate coating)
Bumper	Synthetic rubber (NBR)
Magnet	Plastic magnet
Support	Aluminum alloy (special rust prevention treatment)

Seals

Parts / Bore mm	Rod seal	Piston seal	Tube gasket	
			Rod side	Head side
ϕ 20	KC-7.4	COP-20	Y090216	None
ϕ 25	KC-7.4	COP-25	Y090210	None
ϕ 32	KC-13	COP-32	L090084	None
ϕ 40	KC-13	COP-40	L090151	None
ϕ 50	KC-18	COP-50	L090174	L090106
ϕ 63	KC-18	COP-63	L090180	L090107

Mass

g [oz.]

Bore size mm [in.]	Zero stroke mass Note1	Additional mass for each 1mm [0.0394in.] stroke	Additional mass of cylinder with bumper	Additional mass of cylinder with magnet	Mass of mounting bracket		Additional mass of sensor switch Note2	
					Foot bracket	Flange bracket	ZE□□□A	ZE□□□B
20 [0.787]	63.89 [2.254]	2.07 [0.0730]	10.36 [0.365]	25.71 [0.907]	87 [3.07]	105 [3.70]	15 [0.53]	35 [1.23]
25 [0.984]	96.54 [3.405]	2.65 [0.0935]	13.24 [0.467]	37.47 [1.322]	108 [3.81]	165 [5.82]		
32 [1.260]	160.05 [5.646]	3.86 [0.136]	19.31 [0.681]	52.43 [1.849]	131 [4.62]	196 [6.91]		
40 [1.575]	241.47 [8.517]	4.52 [0.159]	0	69.15 [2.439]	168 [5.93]	351 [12.38]		
50 [1.969]	477.70 [16.850]	7.11 [0.251]	0	108 [3.81]	232 [8.18]	471 [16.61]		
63 [2.480]	706.58 [24.923]	8.77 [0.309]	0	159 [5.61]	312 [11.01]	615 [21.69]		

Notes: 1. The above table is for the standard strokes.
2. Sensor switch codes A and B show the lead wire lengths.
A : 1000mm [39in.] B : 3000mm [118in.]

Calculation example: For the mass of a double acting type cylinder with magnet, bore size of 32mm, stroke of 30mm, and with 2 sensor switches (**ZE135A**)
167.38＋(3.86×30)＋52.43＋(15×2)＝365.61g [12.896oz.]

Dimensions of Square Rod Cylinder Double Acting Type (mm)

● ϕ20～ϕ25

CAD CDAL Bore size

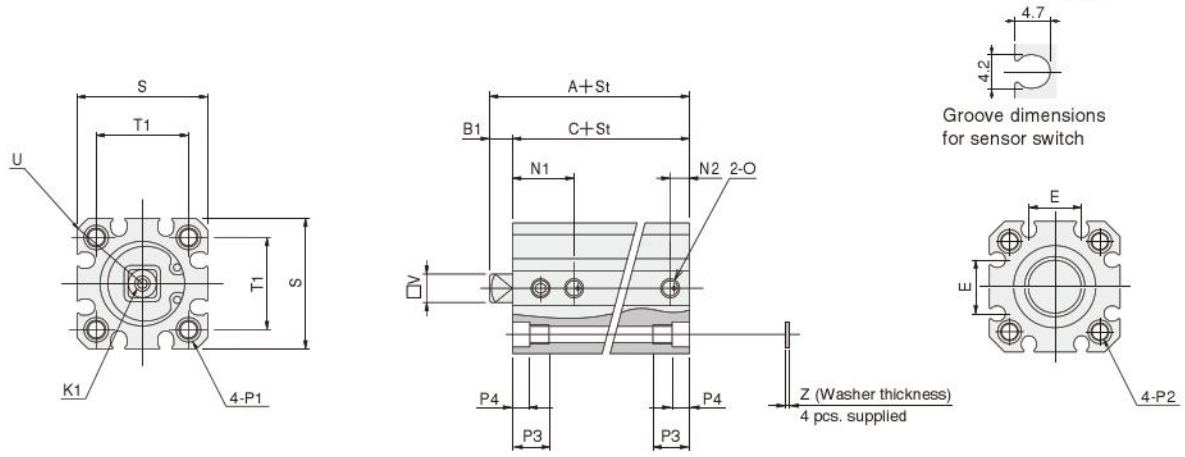

● ϕ32～ϕ63

CAD CDAL Bore size

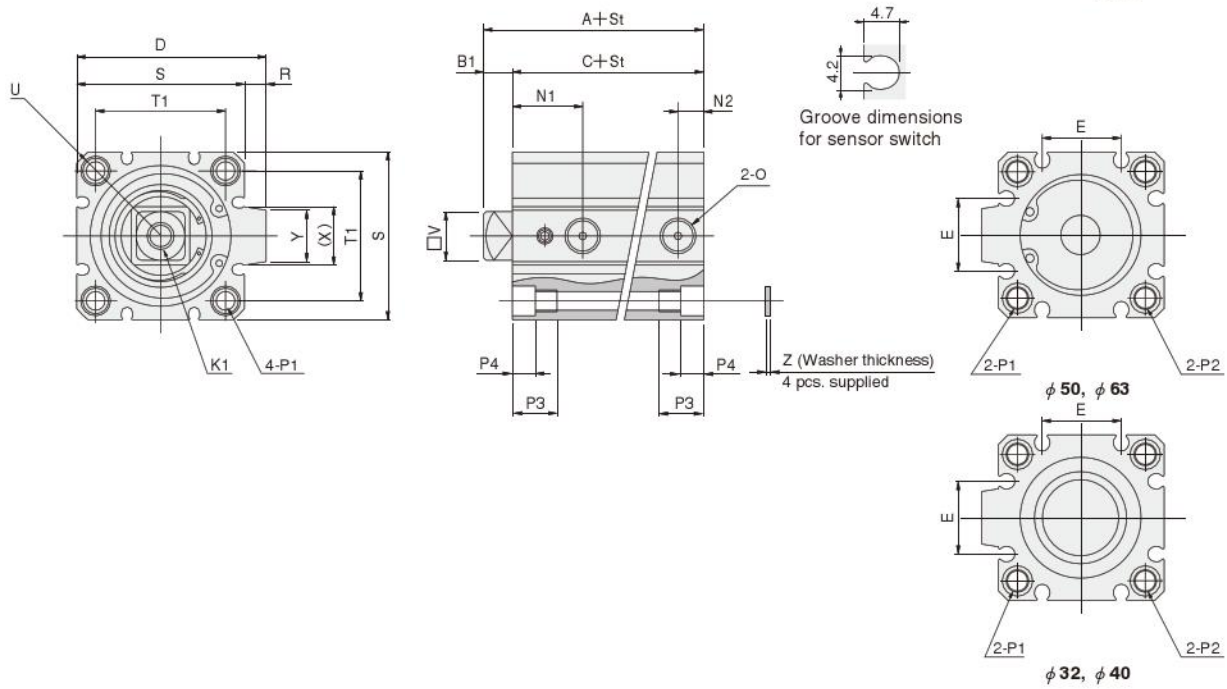

Type / Code / Bore mm [in.]	Standard cylinder (CDAL)			Cylinder with magnet (CDALS)			Standard cylinder with bumper (CDAL-R)			Cylinder with magnet and bumper (CDALS-R)			D	E	K_1	N_1	N_2	O
	A	B_1	C	A	B_1	C	A	B_1	C	A	B_1	C						
20 [0.787]	32	6	26	42	6	36	37	6	31	47	6	41	—	12.2	M4X0.7 Depth8	16	5	M5X0.8
25 [0.984]	33.5	6	27.5	43.5	6	37.5	38.5	6	32.5	48.5	6	42.5	—	12.2	M4X0.7 Depth8	17	5	M5X0.8
32 [1.260]	39	7	32	49	7	42	44	7	37	49	7	42	48.5	18.2	M8X1.25 Depth12	18.5	7.5〔6〕	Rc1/8
40 [1.575]	43	7	36	53	7	46	43	7	36	53	7	46	56.5	18.2	M8X1.25 Depth12	20.5	7.5	Rc1/8
50 [1.969]	53.7	10.7	43	63.7	10.7	53	53.7	10.7	43	63.7	10.7	53	70	24.8	M10X1.5 Depth15	26	9.5	Rc1/4
63 [2.480]	56.2	9.2	47	66.2	9.2	57	56.2	9.2	47	66.2	9.2	57	83	26.8	M10X1.5 Depth15	27.5	11	Rc1/4

Code / Bore mm [in.]	P_1	P_2	P_3	P_4	R	S	T_1	U	V	X	Y	Z	Appropriate through bolt※
20 [0.787]	ϕ4.3 (Thru hole) C'bore ϕ6.5 (Both sides) and M5X0.8 (Both sides)	Counterbore ϕ6.5 and M5X0.8	9.5	4.5	—	34	24	R22	7.4	—	—	1	M3
25 [0.984]	ϕ5.1 (Thru hole) C'bore ϕ8 (Both sides) and M6X1 (Both sides)	Counterbore ϕ8 and M6X1	11.5	5.5	—	40	28	R25	7.4	—	—	1	M4
32 [1.260]	ϕ5.1 (Thru hole) C'bore ϕ8 (Both sides) and M6X1 (Both sides)	Counterbore ϕ8 and M6X1	11.5	5.5	4.5	44	34	R29.5	13	15	13.6	1	M4
40 [1.575]	ϕ6.9 (Thru hole) C'bore ϕ9.5 (Both sides) and M8X1.25 (Both sides)	Counterbore ϕ9.5 and M8X1.25	15.5	7.5	4.5	52	40	R35	13	15	13.6	1.6	M5
50 [1.969]	ϕ6.9 (Thru hole) C'bore ϕ11 (Both sides) and M8X1.25 (Both sides)	Counterbore ϕ11 and M8X1.25	16.5	8.5	8	62	48	R41	18	21.6	19	1.6	M6
63 [2.480]	ϕ6.9 (Thru hole) C'bore ϕ11 (Both sides) and M8X1.25 (Both sides)	Counterbore ϕ11 and M8X1.25	16.5	8.5	8	75	60	R50	18	21.6	19	1.6	M6

Note: Figure in parentheses 〔 〕 is for the standard cylinder (**CDAL**) with 5mm stroke.
※Some types of mounting screws are available (to be ordered separately). See p.209.

Dimensions of Male Rod End Thread Specification (mm)

CAD Available in the file of each cylinder body.

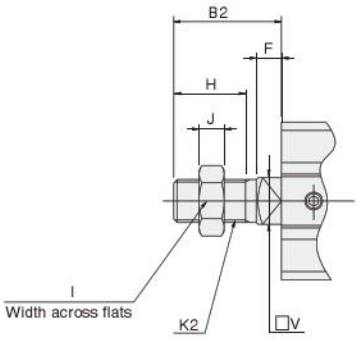

Bore mm [in.] \ Code	B_2	F	H	I	J	K_2	V
20 [0.787]	21	6	13	10	5	M6×1	7.4
25 [0.984]	23	6	15	12	5	M8×1	7.4
32 [1.260]	30	7	20	17	7	M12×1.25	13
40 [1.575]	35	7	25	19	8	M14×1.5	13
50 [1.969]	38.7	10.7	25	27	11	M18×1.5	18
63 [2.480]	37.2	9.2	25	27	11	M18×1.5	18

Remark: Cylinder joints and cylinder rod ends are available for mounting with the rod end male thread specification. For details, see p.1568.

Dimensions of Centering Location (mm)

●Female thread specification, with centering location

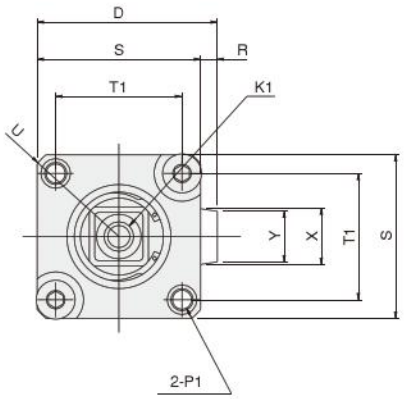

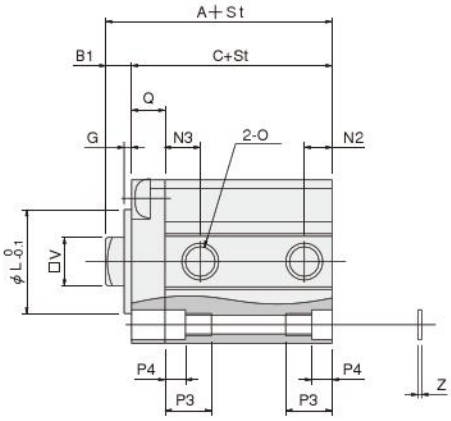

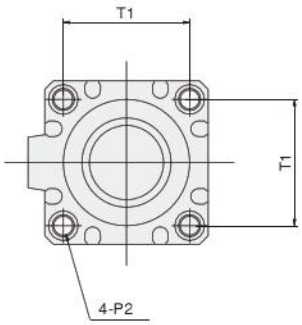

●Male thread specification, with centering location

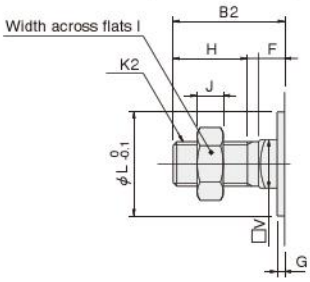

Bore mm [in.] \ Code	B_1	G	L	N_3	Q
20 [0.787]	6	1.5	18	9.5	6.5
25 [0.984]	6	2	18	10.5	6.5
32 [1.260]	7	2	28	9.5	9
40 [1.575]	7	2	28	10.5	10
50 [1.969]	10.7	2	38	11	15
63 [2.480]	9.2	2	40	12.5	15

● The outward view of the square rod cylinder with centering location differs from the view in the case of no centering location, in that a rod cover is mounted on the piston rod side, as shown in the dimension above.
For the dimension tables for female thread specification with centering location, also use the table on p.152, while for male thread specification with centering location, see the above this page.

JIG CYLINDERS C SERIES DOUBLE ROD CYLINDERS

Double Acting Type, Single Acting Type

Symbols

● Double acting type

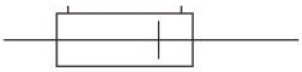

● Single acting type

Specifications

Item / Bore size mm [in.]		6 [0.236]	8 [0.315]	10 [0.394]	12 [0.472]	16 [0.630]	20 [0.787]	25 [0.984]	32 [1.260]	40 [1.575]	50 [1.969]	63 [2.480]	80 [3.150]	100 [3.940]
Operation type		Double acting type			Double acting type, Single acting type							Double acting type		
Media		Air												
Operating pressure range MPa [psi.]	Double acting type	0.15～0.9 [22～131]			0.1～1.0 [15～145]						0.05～1.0 [7～145]			
	Single acting type	—			0.18～1.0 [26～145]	0.15～1.0 [22～145]					0.1～1.0 [15～145]	—		
Proof pressure	MPa [psi.]	1.35 [196]			1.5 [218]									
Operating temperature range	°C [°F]	0～60 [32～140] (The heat resistant specification is 120 [248]. Note1)												
Operating speed range mm/s [in./sec.]	Double acting type	50～500 [2.0～19.7]			30～500 [1.2～19.7]						30～300 [1.2～11.8]			
	Single acting type	—			100～500 [3.9～19.7]						100～300 [3.9～11.8]	—		
Cushion	Double acting type	None			Rubber bumper (Option Note2)									
	Single acting type	—			None							—		
Lubrication		Not required (If lubrication is required, use Turbine Oil Class 1 [**ISO VG32**] or equivalent.)												
Port size		M3×0.5			M5×0.8				Rc1/8		Rc1/4		Rc3/8	

Remark: For Handling Instructions and Precautions, see p.205.

Notes: 1. For heat resistant specification, consult us. Not available for bore sizes ϕ6, ϕ8, and ϕ10.
2. Not available for heat resistant specification.

Bore Size and Stroke

For non-standard strokes, see p.206.

mm

Operation type	Bore size	Standard strokes: Standard cylinder	Standard strokes: Cylinder with magnet
Double acting type	6	5, 10, 15, 20	5, 10, 15, 20
	8		
	10		
	12	5, 10, 15, 20, 25, 30	5, 10, 15, 20, 25, 30
	16		
	20	5, 10, 15, 20, 25, 30, 35, 40, 45, 50	5, 10, 15, 20, 25, 30, 35, 40, 45, 50
	25		
	32	5, 10, 15, 20, 25, 30, 35, 40, 45, 50, 75, 100	5, 10, 15, 20, 25, 30, 35, 40, 45, 50, 75, 100
	40		
	50	10, 15, 20, 25, 30, 35, 40, 45, 50, 75, 100	10, 15, 20, 25, 30, 35, 40, 45, 50, 75, 100
	63		
	80		
	100		
Single acting type	12	5, 10, 15, 20, 25, 30	5, 10, 15, 20, 25, 30
	16		
	20		
	25		
	32		
	40		
	50	10, 15, 20, 25, 30, 35, 40	10, 15, 20, 25, 30, 35, 40

Remarks: 1. Stroke tolerance $^{+1}_{0}$ [$^{+0.039in.}_{0}$]
2. In most cases, body cutting is used for the non-standard strokes.
However, body cutting is not used for strokes of less than 5mm for ϕ12～ϕ40, and strokes of less than 10mm for ϕ50～ϕ100. The collar packed is used for these cases.
Bore sizes ϕ6 to ϕ10 are collar packed only.

Order Codes for Double Rod Cylinders

Operation type

DA : Double acting type
SA : Single acting type Note1

Rod end specification Note4

Female thread

Male thread

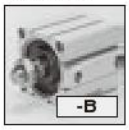

Mounting type

Basic type

Foot mounting type Note7

Flange mounting type Note8

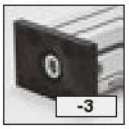

Sensor switch type Note6
(For cylinder with magnet)

Blank:
No sensor switch

-ZE135 : With ZE135
- 2-lead wire Solid state type
- With indicator lamp
- DC10～28V
- Horizontal lead wire

-ZE155 : With ZE155
- 3-lead wire Solid state type
- With indicator lamp
- DC4.5～28V
- Horizontal lead wire

-ZE235 : With ZE235
- 2-lead wire Solid state type
- With indicator lamp
- DC10～28V
- Vertical lead wire

-ZE255 : With ZE255
- 3-lead wire Solid state type
- With indicator lamp
- DC4.5～28V
- Vertical lead wire

-ZE101 : With ZE101 note7
- 2-lead wire Reed switch type
- Without indicator lamp
- DC5～28V AC85～115V
- Horizontal lead wire

-ZE102 : With ZE102 note7
- 2-lead wire Reed switch type
- With indicator lamp
- DC10～28V AC85～115V
- Horizontal lead wire

-ZE201 : With ZE201 note7
- 2-lead wire Reed switch type
- Without indicator lamp
- DC5～28V AC85～115V
- Vertical lead wire

-ZE202 : With ZE202 note7
- 2-lead wire Reed switch type
- With indicator lamp
- DC10～28V AC85～115V
- Vertical lead wire

Lead wire length

A : 1000mm [39in.]
B : 3000mm [118in.]

Number of sensor switches
(For cylinder with magnet)
Blank:
No sensor switch

1 : With 1 sensor switch
2 : With 2 sensor switches

Double rod cylinder

Cylinder specification

Blank : Standard cylinder Note2 (Non-ion specification Note9)
S : Cylinder with magnet (Non-ion specification Note9)
F : Heat resistant cylinder Note3

Bumper Note5

Blank : No bumper
-R : With bumper

Centering location Note7

Blank : No centering location
-G : With centering location

Basic type				Bore size×Stroke							
C	DA SA	D	S F	×	-B Note10	-R	-G	-1 -3	-ZE135 -ZE155 -ZE235 -ZE255 -ZE101 -ZE102 -ZE201 -ZE202	A B	1 2 ⋮ n

- See table for bore size and stroke.
- Mounting brackets are included at shipping.
- For the order codes of sensor switches only, see p.199.
- For heat resistant specification, sensor switch is not available.
- In sizes ϕ12 and ϕ16 with foot mounting brackets and strokes of less than 10mm, the foot mounting bracket and sensor switch may interfere with each other, which could prevent 2 sensor switches from being mounted. For details, consult us.

Notes:
1. Used for both single acting push type and single acting pull type. Not available for bore sizes ϕ6, ϕ8, and ϕ10.
2. In the standard cylinders, a magnet for the sensor switch is not built-in.
3. Not available for the cylinder with magnet or the cylinder with bumper.
4. Specifications are the same for both sides.
5. For the double acting type only. Not available in heat resistant specification, however. Not available for bore sizes ϕ6, ϕ8, and ϕ10.
6. For details of sensor switches, see p.1544.
7. Not available for bore sizes ϕ6, ϕ8, ϕ10 and ϕ12.
8. Cannot be mounted on bore size ϕ40 with centering location (**-G**). Not available for bore sizes ϕ6, ϕ8, and ϕ10.
9. Bore sizes ϕ6, ϕ8, ϕ10, and ϕ12 are not non-ion specification.
10. For information regarding the cylinder joint and cylinder rod end for male thread, see p.1568.

Additional Parts (To be ordered separately)

Foot mounting bracket (p.197)

Flange mounting bracket (p.198)

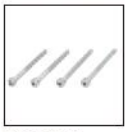

Mounting screws (p.209)

Inner Construction and Major Parts

●Double acting type (CDAD)

● ϕ6～ϕ10

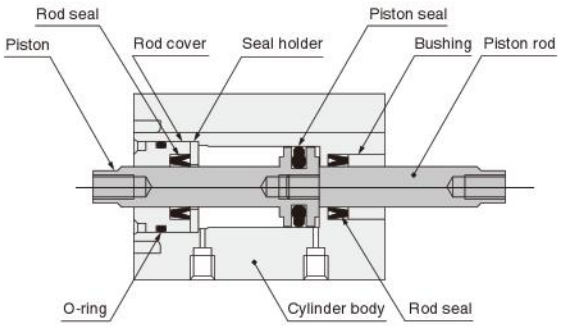

● ϕ12～ϕ100

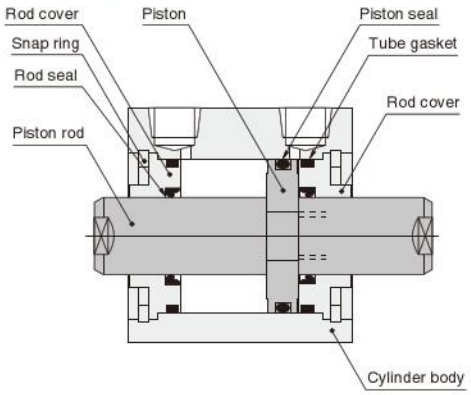

●Single acting type (CSAD)

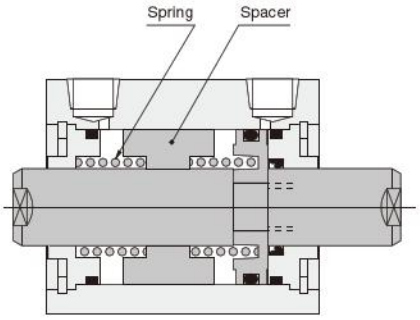

Note: Bore sizes ϕ6 to ϕ10 are not available as single acting cylinders.

●Cylinder with magnet

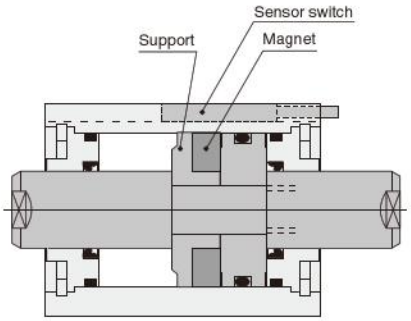

●With bumper

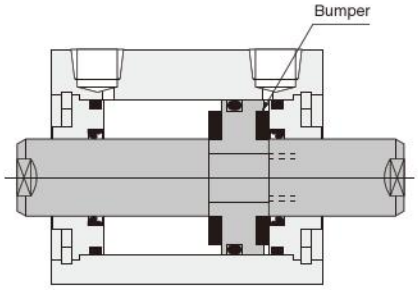

Note: Bore sizes ϕ6 to ϕ10 are not available with bumpers.

Major Parts and Materials

Parts \ Bore mm	ϕ6	ϕ8	ϕ10	ϕ12	ϕ16	ϕ20	ϕ25	ϕ32	ϕ40	ϕ50	ϕ63	ϕ80	ϕ100
Cylinder body	Aluminum alloy (anodized)												
Piston	Stainless steel			Aluminum alloy (special rust prevention treatment)									
Piston rod	Stainless steel			Stainless steel (chrome plated)				Steel (chrome plated)					
Seal	Synthetic rubber (NBR)												
Rod cover	Aluminum alloy (special wear-resistant treatment)												
Snap ring	—			Steel (phosphate coating)									
Spring	—			Piano wire							—		
Spacer	—			Aluminum alloy (special rust prevention treatment)							—		
Bumper	—			Synthetic rubber (NBR; urethane for ϕ12 only)									
Magnet	Neodymium magnet			Plastic magnet									
Support	—			Aluminum alloy (special rust prevention treatment)									
Bushing	Copper alloy			—									

Seals

Parts / Bore mm	Rod seal	Piston seal	Tube gasket
ϕ12	MYR-6	COP-12	Y090260
ϕ16	MYR-8	COP-16	Y090207
ϕ20	MYR-10	COP-20(MYA-16)	Y090216
ϕ25	MYR-12	COP-25(MYA-21)	Y090210
ϕ32	MYR-16	COP-32	L090084
ϕ40	MYR-16	COP-40	L090151
ϕ50	MYR-20	COP-50	L090174
ϕ63	MYR-20	COP-63	L090180
ϕ80	PNY-25	COP-80	L090171
ϕ100	PNY-32	COP-100	L090172

Note: Items in parentheses ( ) are for the single acting type.

Mass

● Double acting type

g [oz.]

Bore size mm [in.]	Zero stroke mass	Additional mass for each 1mm [0.0394in.] stroke	Additional mass of cylinder with bumper	Additional mass of cylinder with magnet	Mass of mounting bracket		Additional mass of sensor switch Note	
					Foot bracket	Flange bracket	ZE□□□A	ZE□□□B
6 [0.236]	12.7 [0.448]	0.84 [0.0296]	—	3.9 [0.138]	—	—	15 [0.53]	35 [1.23]
8 [0.315]	19.2 [0.677]	1.11 [0.0392]	—	5.3 [0.187]	—	—		
10 [0.394]	21.0 [0.741]	1.27 [0.0448]	—	6.7 [0.236]	—	—		
12 [0.472]	30.41 [1.073]	1.51 [0.0533]	7.53 [0.266]	6.59 [0.232]	50 [1.76]	55 [1.94]		
16 [0.630]	44.4 [1.566]	2.01 [0.0709]	10.05 [0.354]	9.93 [0.350]	62 [2.19]	71 [2.50]		
20 [0.787]	73.31 [2.586]	2.88 [0.102]	14.38 [0.507]	25.71 [0.907]	84 [2.96]	101 [3.56]		
25 [0.984]	104.2 [3.675]	3.99 [0.141]	19.97 [0.704]	37.47 [1.322]	104 [3.67]	160 [5.64]		
32 [1.260]	165.44 [5.836]	5.69 [0.201]	28.47 [1.004]	52.43 [1.849]	126 [4.44]	186 [6.56]		
40 [1.575]	241.43 [8.516]	6.35 [0.224]	0	69.15 [2.439]	160 [5.64]	335 [11.82]		
50 [1.969]	328.92 [11.602]	9.5 [0.335]	0	108 [3.81]	220 [7.76]	447 [15.77]		
63 [2.480]	499.3 [17.61]	11.16 [0.394]	0	159 [5.61]	300 [10.58]	591 [20.85]		
80 [3.150]	1029.17 [36.302]	16.91 [0.596]	0	245 [8.64]	644 [22.72]	1414 [49.88]		
100 [3.940]	1872.15 [66.037]	24.93 [0.879]	0	360 [12.70]	1172 [41.34]	2606 [91.92]		

Note: Sensor switch codes A and B show the lead wire lengths.
A: 1000mm [39in.] B: 3000mm [118in.]

● Single acting type

g [oz.]

Item	Basic mass Note1								Additional mass of cylinder with magnet	Mass of mounting bracket		Additional mass of sensor switch Note2	
Bore mm [in.] / Stroke mm	5	10	15	20	25	30	35	40	5~30 (ϕ50: 10~40)	Foot bracket	Flange bracket	ZE□□□A	ZE□□□B
12 [0.472]	42.64 [1.504]	50.16 [1.769]	57.69 [2.035]	76.83 [2.710]	84.35 [2.975]	91.88 [3.241]	—	—	7.78 [0.274]	50 [1.76]	55 [1.94]	15 [0.53]	35 [1.23]
16 [0.630]	62.08 [2.190]	72.13 [2.544]	82.18 [2.899]	106.48 [3.756]	116.53 [4.110]	126.58 [4.465]	—	—	10.32 [0.364]	62 [2.19]	71 [2.50]		
20 [0.787]	84.93 [2.996]	99.31 [3.503]	113.68 [4.010]	147.6 [5.206]	161.98 [5.714]	176.35 [6.220]	—	—	23.38 [0.825]	84 [2.96]	101 [3.56]		
25 [0.984]	120.1 [4.236]	140.07 [4.941]	160.04 [5.645]	206.73 [7.292]	226.7 [7.996]	246.67 [8.701]	—	—	39.1 [1.379]	104 [3.67]	160 [5.64]		
32 [1.260]	187.86 [6.626]	216.33 [7.631]	244.79 [8.635]	335.01 [11.817]	363.48 [12.821]	391.94 [13.825]	—	—	50.58 [1.784]	126 [4.44]	186 [6.56]		
40 [1.575]	266 [9.38]	297.75 [10.503]	329.49 [11.622]	448.28 [15.812]	480.02 [16.932]	511.77 [18.052]	—	—	69.42 [2.449]	160 [5.64]	335 [11.82]		
50 [1.969]	—	401.18 [14.151]	448.67 [15.826]	496.15 [17.501]	639.23 [22.548]	686.72 [24.223]	734.2 [25.898]	781.69 [27.573]	106.05 [3.741]	220 [7.76]	447 [15.77]		

Notes: 1. The above table is for the standard strokes.
2. Sensor switch codes A and B show the lead wire lengths.
A: 1000mm [39in.] B: 3000mm [118in.]

Calculation example: For the mass of a double acting type cylinder with magnet, bore size of 25mm, stroke of 30mm, and with 2 sensor switches (**ZE135A**)
104.2+(3.99×30)+37.47+(15×2)=291.37g [10.278oz.]

Dimensions of Double Rod Double Acting Type (mm)

● ϕ6～ϕ25

CDAD Bore size

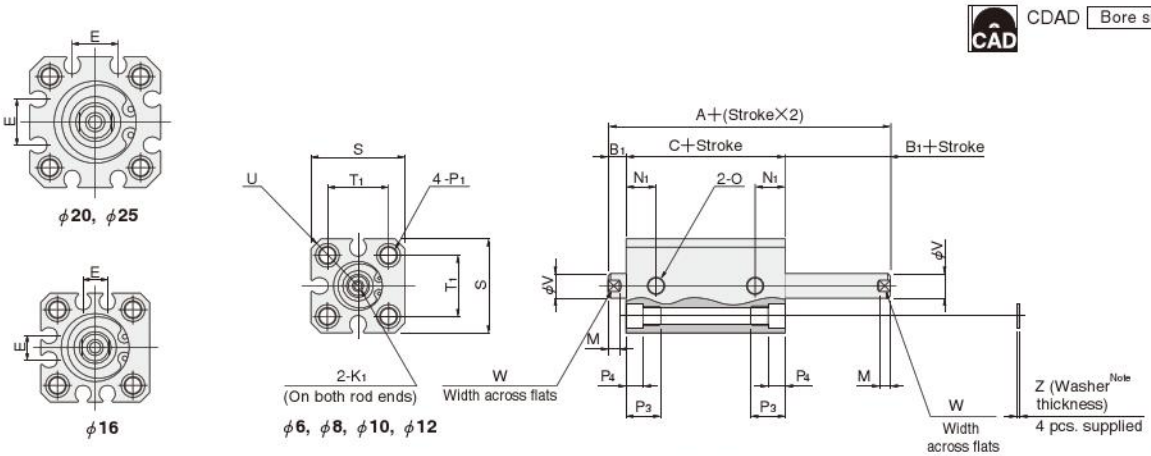

Note: Washers for bore sizes ϕ6, ϕ8, and ϕ10 are not available.

● The drawing is for ϕ12.

● ϕ32～ϕ100

CDAD Bore size

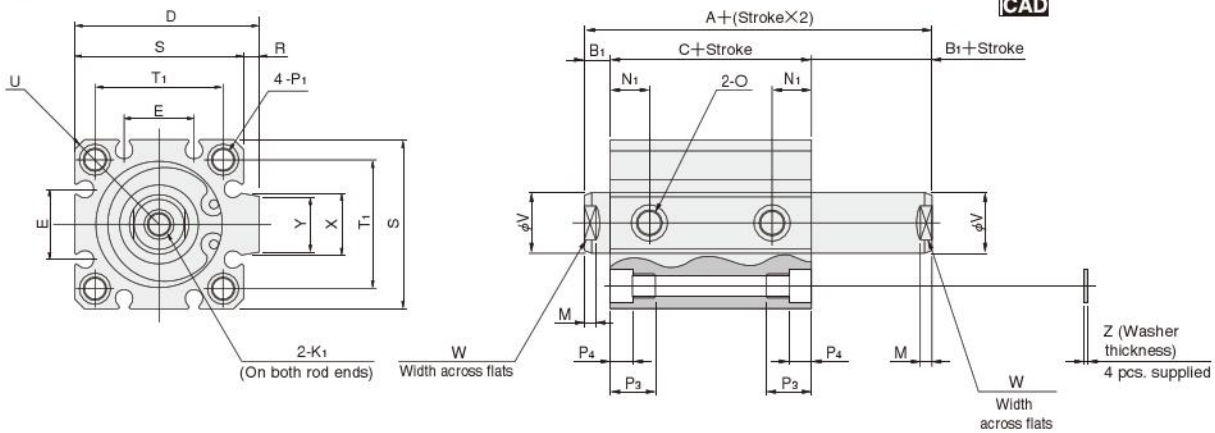

Type / Code / Bore mm [in.]	Standard cylinder (CDAD)			Cylinder with magnet (CDADS)			Standard cylinder with bumper (CDAD-R)			Cylinder with magnet and bumper (CDADS-R)			D	E	K1	M	N1	O
	A	B1	C	A	B1	C	A	B1	C	A	B1	C						
6 [0.236]	28.5	5	18.5	33.5	5	23.5	—	—	—	—	—	—	—	—	M2.5×0.45 Depth5	3	7	M3×0.5
8 [0.315]	30.5	5	20.5	35.5	5	25.5	—	—	—	—	—	—	—	—	M3×0.5 Depth5	3	7.5	M3×0.5
10 [0.394]	31	5	21	36	5	26	—	—	—	—	—	—	—	—	M3×0.5 Depth5	3	8.5	M3×0.5
12 [0.472]	33	5	23	38	5	28	38	5	28	43	5	33	—	—	M3×0.5 Depth6	3.5	8	M5×0.8
16 [0.630]	34	5.5	23	39	5.5	28	39	5.5	28	44	5.5	33	—	6.2	M4×0.7 Depth8	3.5	8	M5×0.8
20 [0.787]	37	5.5	26	47	5.5	36	42	5.5	31	52	5.5	41	—	12.2	M5×0.8 Depth10	4.5	9.5	M5×0.8
25 [0.984]	38.5	6	26.5	48.5	6	36.5	43.5	6	31.5	53.5	6	41.5	—	12.2	M6×1 Depth10	5	10.5	M5×0.8
32 [1.260]	44	7	30	54	7	40	49	7	35	54	7	40	48.5	18.2	M8×1.25 Depth12	6	9.5	Rc1/8
40 [1.575]	47	7	33	57	7	43	47	7	33	57	7	43	56.5	18.2	M8×1.25 Depth12	6	10.5	Rc1/8
50 [1.969]	48	9	30	58	9	40	48	9	30	58	9	40	70	24.8	M10×1.5 Depth15	7	11	Rc1/4
63 [2.480]	52.5	9	34.5	62.5	9	44.5	52.5	9	34.5	62.5	9	44.5	83	26.8	M10×1.5 Depth15	7	12.5	Rc1/4
80 [3.150]	69.5	11	47.5	79.5	11	57.5	69.5	11	47.5	79.5	11	57.5	102	32.8	M14×2 Depth20	9	18	Rc3/8
100 [3.940]	81.5	12	57.5	91.5	12	67.5	81.5	12	57.5	91.5	12	67.5	122	32.8	M18×2.5 Depth20	9	22.5	Rc3/8

Code / Bore mm [in.]	P1	P3	P4	R	S	T1	U	V	W	X	Y	Z	Appropriate through bolt※
6 [0.236]	ϕ3.3 (Thru hole) C'bore ϕ6 (Both sides) and M4×0.7 (Both sides)	9.5	3.5	—	19	11	R12	4	3.5	—	—	—	M3
8 [0.315]	ϕ3.3 (Thru hole) C'bore ϕ6.2 (Both sides) and M4×0.7 (Both sides)	9.5	3.5	—	21	13	R13.5	5	4	—	—	—	M3
10 [0.394]	ϕ3.3 (Thru hole) C'bore ϕ6.2 (Both sides) and M4×0.7 (Both sides)	9.5	3.5	—	23	15	R15	5	4	—	—	—	M3
12 [0.472]	ϕ4.3 (Thru hole) C'bore ϕ6.5 (Both sides) and M5×0.8 (Both sides)	9.5	4.5	—	25	16.3	R16	6	5	—	—	1	M3
16 [0.630]	ϕ4.3 (Thru hole) C'bore ϕ6.5 (Both sides) and M5×0.8 (Both sides)	9.5	4.5	—	29	19.8	R19	8	6	—	—	1	M3
20 [0.787]	ϕ4.3 (Thru hole) C'bore ϕ6.5 (Both sides) and M5×0.8 (Both sides)	9.5	4.5	—	34	24	R22	10	8	—	—	1	M3
25 [0.984]	ϕ5.1 (Thru hole) C'bore ϕ8 (Both sides) and M6×1 (Both sides)	11.5	5.5	—	40	28	R25	12	10	—	—	1	M4
32 [1.260]	ϕ5.1 (Thru hole) C'bore ϕ8 (Both sides) and M6×1 (Both sides)	11.5	5.5	4.5	44	34	R29.5	16	14	15	13.6	1	M4
40 [1.575]	ϕ6.9 (Thru hole) C'bore ϕ9.5 (Both sides) and M8×1.25 (Both sides)	15.5	7.5	4.5	52	40	R35	16	14	15	13.6	1.6	M5
50 [1.969]	ϕ6.9 (Thru hole) C'bore ϕ11 (Both sides) and M8×1.25 (Both sides)	16.5	8.5	8	62	48	R41	20	17	21.6	19	1.6	M6
63 [2.480]	ϕ6.9 (Thru hole) C'bore ϕ11 (Both sides) and M8×1.25 (Both sides)	16.5	8.5	8	75	60	R50	20	17	21.6	19	1.6	M6
80 [3.150]	ϕ10.5 (Thru hole) C'bore ϕ14 (Both sides) and M12×1.75 (Both sides)	22.5	10.5	8	94	74	R62	25	22	27.6	25	1.6	M8
100 [3.940]	ϕ12.3 (Thru hole) C'bore ϕ17.5 (Both sides) and M14×2 (Both sides)	27	13	8	114	90	R75	32	27	27.6	25	2	M10

※ Some types of mounting screws are available (to be ordered separately). See p.209.

Dimensions of Double Rod Single Acting Type (mm)

● ϕ12～ϕ25

CSAD Bore size

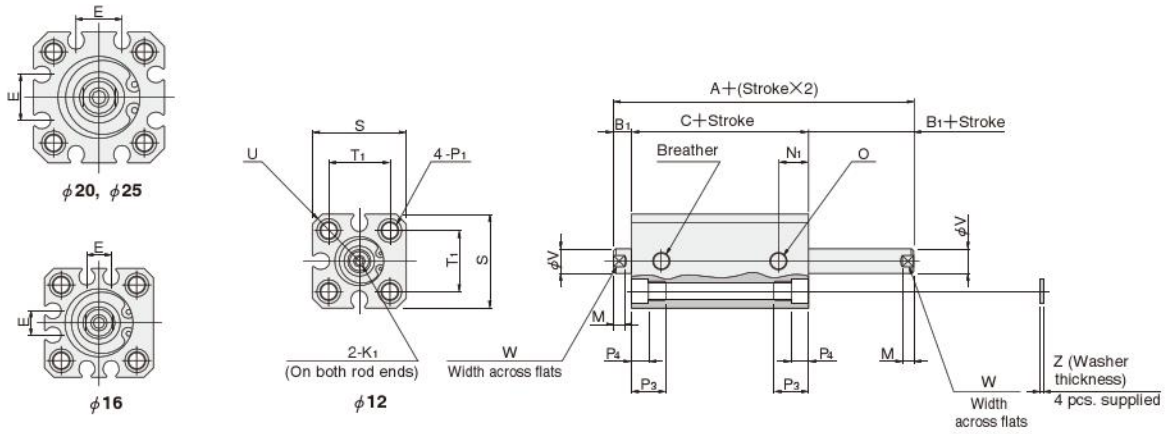

● The drawing is for ϕ 12.

● ϕ32～ϕ50

CSAD Bore size

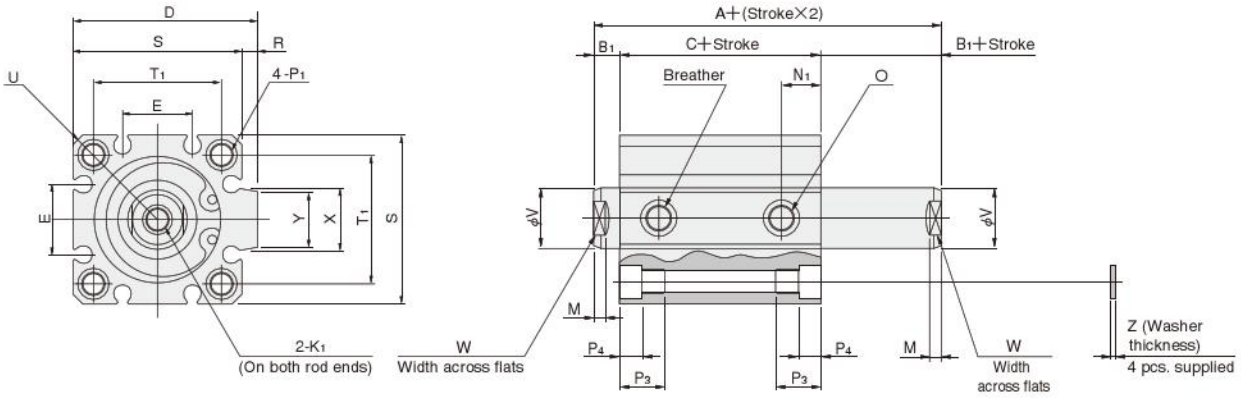

Type / Stroke / Bore mm [in.] / Code	Standard cylinder (CSAD)						Cylinder with magnet (CSADS)						D	E	K1	M	N1	O
	5～15 (ϕ 50: 10～20)			16～30 (ϕ 50: 21～40)			5～15 (ϕ 50: 10～20)			16～30 (ϕ 50: 21～40)								
	A	B1	C	A	B1	C	A	B1	C	A	B1	C						
12 [0.472]	38	5	28	48	5	38	43	5	33	53	5	43	—	—	M3×0.5 Depth6	3.5	8	M5×0.8
16 [0.630]	39	5.5	28	49	5.5	38	44	5.5	33	54	5.5	43	—	6.2	M4×0.7 Depth8	3.5	8	M5×0.8
20 [0.787]	37	5.5	26	47	5.5	36	47	5.5	36	57	5.5	46	—	12.2	M5×0.8 Depth10	4.5	9.5	M5×0.8
25 [0.984]	38.5	6	26.5	48.5	6	36.5	48.5	6	36.5	58.5	6	46.5	—	12.2	M6×1 Depth10	5	10.5	M5×0.8
32 [1.260]	44	7	30	59	7	45	54	7	40	69	7	55	48.5	18.2	M8×1.25 Depth12	6	9.5	Rc1/8
40 [1.575]	47	7	33	62	7	48	57	7	43	72	7	58	56.5	18.2	M8×1.25 Depth12	6	10.5	Rc1/8
50 [1.969]	48	9	30	63	9	45	58	9	40	73	9	55	70	24.8	M10×1.5 Depth15	7	11	Rc1/4

Code / Bore mm [in.]	P1	P3	P4	R	S	T1	U	V	W	X	Y	Z	Appropriate through bolt※
12 [0.472]	ϕ4.3 (Thru hole) Counterbore ϕ6.5 (Both sides) and M5×0.8 (Both sides)	9.5	4.5	—	25	16.3	R16	6	5	—	—	1	M3
16 [0.630]	ϕ4.3 (Thru hole) Counterbore ϕ6.5 (Both sides) and M5×0.8 (Both sides)	9.5	4.5	—	29	19.8	R19	8	6	—	—	1	M3
20 [0.787]	ϕ4.3 (Thru hole) Counterbore ϕ6.5 (Both sides) and M5×0.8 (Both sides)	9.5	4.5	—	34	24	R22	10	8	—	—	1	M3
25 [0.984]	ϕ5.1 (Thru hole) Counterbore ϕ8 (Both sides) and M6×1 (Both sides)	11.5	5.5	—	40	28	R25	12	10	—	—	1	M4
32 [1.260]	ϕ5.1 (Thru hole) Counterbore ϕ8 (Both sides) and M6×1 (Both sides)	11.5	5.5	4.5	44	34	R29.5	16	14	15	13.6	1	M4
40 [1.575]	ϕ6.9 (Thru hole) Counterbore ϕ9.5 (Both sides) and M8×1.25 (Both sides)	15.5	7.5	4.5	52	40	R35	16	14	15	13.6	1.6	M5
50 [1.969]	ϕ6.9 (Thru hole) Counterbore ϕ11 (Both sides) and M8×1.25 (Both sides)	16.5	8.5	8	62	48	R41	20	17	21.6	19	1.6	M6

※ Some types of mounting screws are available (to be ordered separately). See p.209.

Dimensions of Male Rod End Thread Specification (mm)

CAD Available in the file of each cylinder body.

● Double acting type, Single acting type

● ϕ6～ϕ25

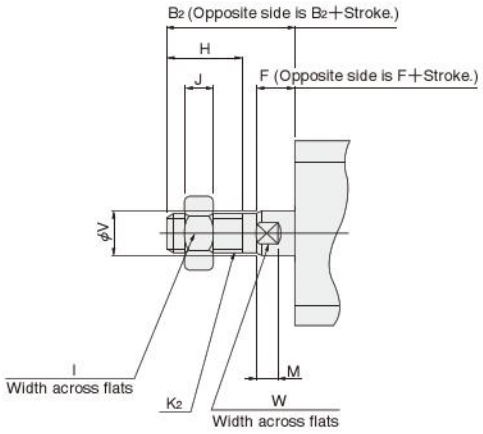

● ϕ32～ϕ100
(Single acting type available up to ϕ50)

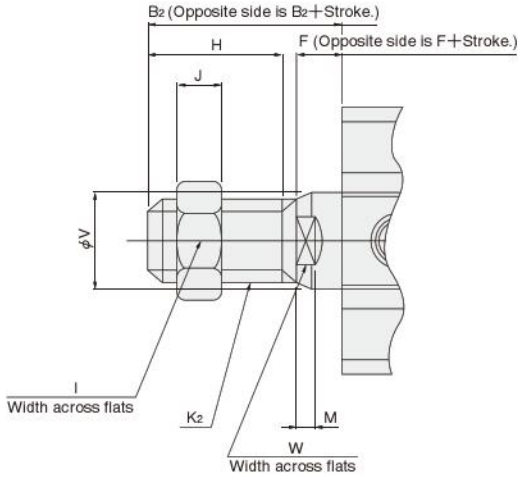

Bore mm [in.] \ Code	B_2	F	H	I	J	K_2	M	V	W
6 [0.236]	15	5	8	5.5	1.8	M3×0.5	3	4	3.5
8 [0.315]	15	5	8	7	2.4	M4×0.7	3	5	4
10 [0.394]	15	5	8	7	2.4	M4×0.7	3	5	4
12 [0.472]	17	5	10	8	4	M5×0.8	3.5	6	5
16 [0.630]	20.5	5.5	13	10	5	M6×1	3.5	8	6
20 [0.787]	22.5	5.5	15	12	5	M8×1	4.5	10	8
25 [0.984]	24	6	15	14	6	M10×1.25	5	12	10
32 [1.260]	35	7	25	19	8	M14×1.5	6	16	14
40 [1.575]	35	7	25	19	8	M14×1.5	6	16	14
50 [1.969]	37	9	25	27	11	M18×1.5	7	20	17
63 [2.480]	37	9	25	27	11	M18×1.5	7	20	17
80 [3.150]	44	11	30	32	13	M22×1.5	9	25	22
100 [3.940]	50	12	35	36	14	M26×1.5	9	32	27

Remark: Cylinder joints and cylinder rod ends are available for mounting with the rod end male thread specification. For details, see p.1568.

Dimensions of Centering Location (mm)

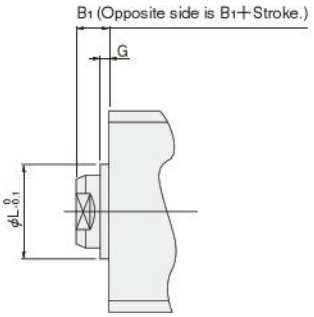

Bore mm [in.] \ Code	B_1	G	L
16 [0.630]	5.5	1.5	9.4
20 [0.787]	5.5	1.5	12
25 [0.984]	6	2	15
32 [1.260]	7	2	21
40 [1.575]	7	2	29
50 [1.969]	9	2	38
63 [2.480]	9	2	40
80 [3.150]	11	2	45
100 [3.940]	12	2	55

●Not available for bore sizes ϕ6, ϕ8, ϕ10 and ϕ12.

JIG CYLINDERS C SERIES TANDEM CYLINDERS

Double Acting Type, Single Acting Push Type

Symbols

● Double acting type

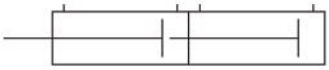

● Single acting push type

Operation of Tandem Cylinders

Tandem Cylinders are a set of 2 cylinders joined end to end.

It can be used as a two-stage stroke cylinder by supplying air to either Port A or Port B. It can also obtain twice the thrust within the "stroke I" range.

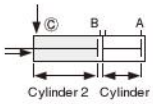

The rods retract strokes II and I when air is supplied from Port Ⓒ.

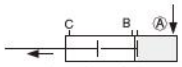

The rod moves stroke I when air is supplied from Port Ⓐ.

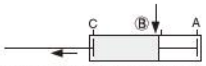

The rod moves stroke II when air is supplied from Port Ⓑ.

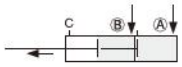

Twice the thrust is obtained within the stroke I range when air is supplied from Ports Ⓐ and Ⓑ.

Specifications

Item \ Bore size mm [in.]		12 [0.472]	16 [0.630]	20 [0.787]	25 [0.984]	32 [1.260]	40 [1.575]	50 [1.969]	63 [2.480]	80 [3.150]	100 [3.940]
Operation type		Double acting type, Single acting push type							Double acting type		
Media		Air									
Operating pressure range MPa [psi.]	Double acting type	0.2～1.0 [29～145]						0.1～1.0 [15～145]			
	Single acting type	0.3～1.0 [44～145]						0.2～1.0 [29～145]	—		
Proof pressure MPa [psi.]		1.5 [218]									
Operating temperature range °C [°F]		0～60 [32～140] (The heat resistant specification is 120 [248]. Note1)									
Operating speed range mm/s [in./sec.]	Double acting type	30～500 [1.2～19.7]						30～300 [1.2～11.8]			
	Single acting type	100～500 [3.9～19.7]						100～300 [3.9～11.8]	—		
Cushion	Double acting type	Rubber bumper (Option Note2)									
	Single acting type	None							—		
Lubrication		Not required (If lubrication is required, use Turbine Oil Class 1 [**ISO VG32**] or equivalent.)									
Port size		M5×0.8				Rc1/8		Rc1/4		Rc3/8	

Remark: For Handling Instructions and Precautions, see p.205.

Notes: 1. For heat resistant specification, consult us.
2. Not available for heat resistant specification.

Bore Size and Stroke

For non-standard strokes, see p.206.

mm

Operation type	Bore size \ Stroke1	5	10	15	20	25	30	35	40	45	50	75	100
Double acting type **CDAT CDATS**	**12, 16**	0,5,10 15,20,25	0,5,10 15,20	0,5,10,15	0,5,10	0,5	0	—	—	—	—	—	—
	20, 25	0,5,10,15 20,25,30 35,40,45	0,5,10,15 20,25,30 35,40	0,5,10 15,20,25 30,35	0,5,10,15 20,25,30	0,5,10 15,20,25	0,5,10 15,20	0,5,10,15	0,5,10	0,5	0	—	—
	32, 40	0,5,10,15 20,25,30,35 40,45,70,95	0,5,10,15 20,25,30,35 40,65,90	0,5,10,15 20,25,30 35,60,85	0,5,10,15 20,25,30 55,80	0,5,10 15,20,25 50,75	0,5,10 15,20 45,70	0,5,10,15 40,65	0,5,10 35,60	0,5,30,55	0,25,50	0,25	0
	50, 63 80, 100	—	0,5,10,15 20,25,30,35 40,65,90	0,5,10,15 20,25,30 35,60,85	0,5,10,15 20,25,30 55,80	0,5,10 15,20,25 50,75	0,5,10,15 20,45,70	0,5,10,15 40,65	0,5,10 35,60	0,5,30,55	0,25,50	0,25	0
Single acting type **CSAT CSATS**	**12, 16, 20 25, 32, 40**	0,5,10 15,20,25	0,5,10 15,20	0,5,10,15	0,5,10	0,5	0	—	—	—	—	—	—
	50	—	0,5,10,15 20,25,30	0,5,10 15,20,25	0,5,10 15,20	0,5,10,15	0,5,10	0,5	0	—	—	—	—

Remarks: 1. Stroke tolerance: Stroke 1 side $^{+1}_{-0.2}$[$^{+0.039in.}_{-0.008in.}$] stroke 2 side $^{+1}_{0}$[$^{+0.039in.}_{0}$]
2. The figures in the table are combinations of stroke 2 (standard) responding to stroke 1 (standard).
3. In most cases, body cutting is used for the non-standard strokes.
However, body cutting is not used for "Stroke 1" or "Stroke 1 + Stroke 2" under the condition mentioned below. The collar packed is used for these cases.
ϕ 12 ～ ϕ 40: less than 5mm
ϕ 50 ～ ϕ 100: less than 10mm

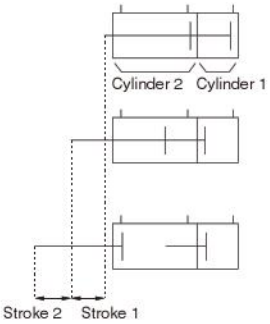

● About stroke 1 and stroke 2

Stroke 1 is the stroke of cylinder 1.

Stroke 2 is obtained by subtracting stroke 1 from the stroke of cylinder 2.

Order Codes for Tandem Cylinders

Operation type

DA : Double acting type
SA : Single acting push type

Rod end specification

Female thread

Male thread

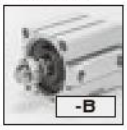

Mounting type

Basic type

Flange mounting type Note6

Sensor switch type Note5
(For cylinder with magnet)

Blank:
No sensor switch

-ZE135 : With ZE135
- 2-lead wire Solid state type
- With indicator lamp
- DC10～28V
- Horizontal lead wire

-ZE155 : With ZE155
- 3-lead wire Solid state type
- With indicator lamp
- DC4.5～28V
- Horizontal lead wire

-ZE235 : With ZE235
- 2-lead wire Solid state type
- With indicator lamp
- DC10～28V
- Vertical lead wire

-ZE255 : With ZE255
- 3-lead wire Solid state type
- With indicator lamp
- DC4.5～28V
- Vertical lead wire

-ZE101 : With ZE101
- 2-lead wire Reed switch type
- Without indicator lamp
- DC5～28V AC85～115V
- Horizontal lead wire

-ZE102 : With ZE102
- 2-lead wire Reed switch type
- With indicator lamp
- DC10～28V AC85～115V
- Horizontal lead wire

-ZE201 : With ZE201
- 2-lead wire Reed switch type
- Without indicator lamp
- DC5～28V AC85～115V
- Vertical lead wire

-ZE202 : With ZE202
- 2-lead wire Reed switch type
- With indicator lamp
- DC10～28V AC85～115V
- Vertical lead wire

Lead wire length

A : 1000mm [39in.]
B : 3000mm [118in.]

Number of sensor switches
(For cylinder with magnet)
Blank:
No sensor switch

1 : With 1 sensor switch
2 : With 2 sensor switches

Heat resistant specification

Blank : Standard cylinder Note1
F : Heat resistant cylinder Note2

Tandem cylinder

Cylinder specification

Blank : Standard cylinder Note1 (Non-ion specification)
S : Cylinder with magnet Note3 (Non-ion specification)

Bumper Note4

Blank : No bumper
-R : With bumper

Centering location Note7

Blank : No centering location
-G : With centering location

Basic type					Bore size × Stroke							
C	DA SA	F	T	S	Bore size × Stroke1 × Stroke2	-B Note8	-R	-G	-3	-ZE135 -ZE155 -ZE235 -ZE255 -ZE101 -ZE102 -ZE201 -ZE202	A B	1 2 ⋮ n

- See table for bore size and stroke.
- Mounting brackets are included at shipping.
- For the order codes of sensor switches only, see p.199.
- For heat resistant specification, sensor switch is not available.

Notes:
1. In the standard cylinder, a magnet for the sensor switch is not built-in.
2. Not available for the cylinder with magnet or the cylinder with bumper.
3. Not available in heat resistant specification.
4. For the double acting type only. Not available for heat resistant specification.
5. For details of sensor switches, see p.1544.
6. The flange mounting bracket can be mounted on the rod side only. Moreover, it cannot be mounted on the bore size ϕ 40 with centering location (**-G**).
7. Not available for the bore size ϕ 12.
8. For information regarding the cylinder joint and cylinder rod end for male thread, see p.1568.

Additional Parts (To be ordered separately)

Flange mounting bracket (p.198)

Mounting screws (p.209)

Inner Construction and Major Parts

● Double acting type (CDAT)

● ϕ12～ϕ40

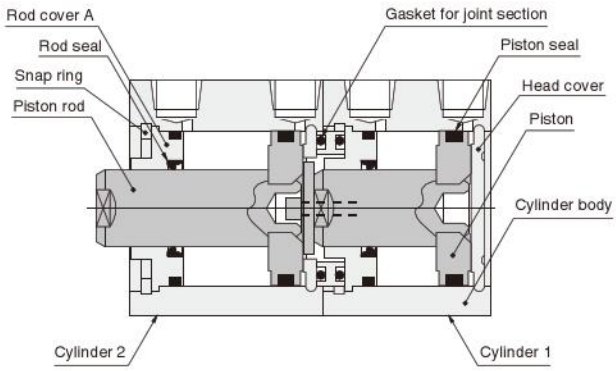

● ϕ50～ϕ100

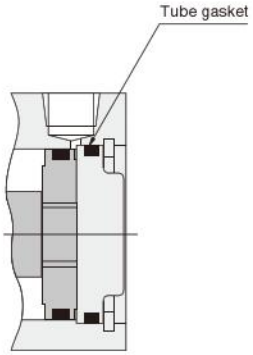

● Single acting push type (CSAT)

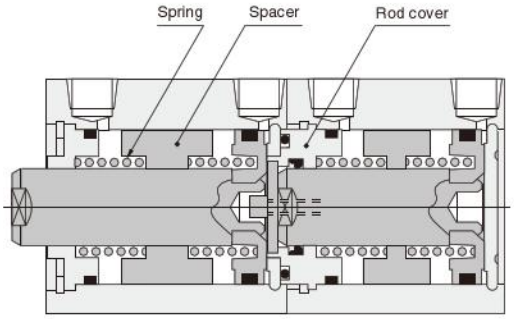

● Cylinder with magnet

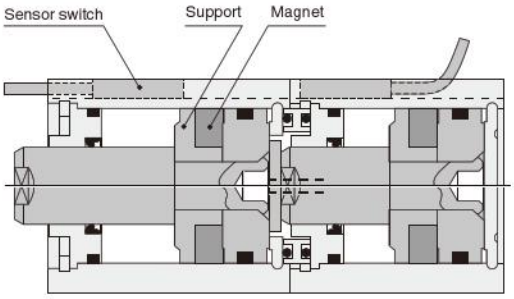

● With bumper

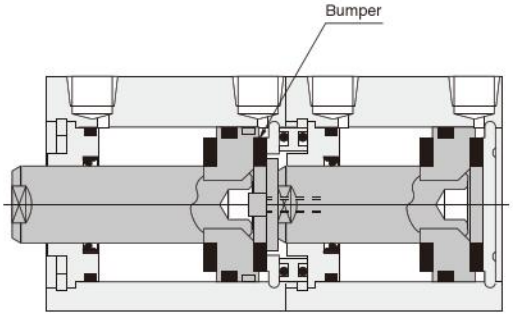

Tandem Cylinder Air Circuit Examples

When using a tandem cylinder as a 2-stage stroke cylinder, refer to the air circuits shown below. For application of other air circuits not shown below, consult us.

● For mounting upward-facing cylinders

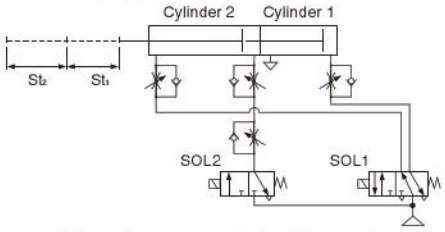

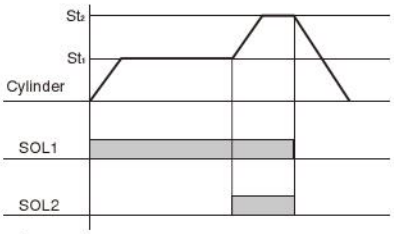

● For mounting downward-facing or horizontal cylinders

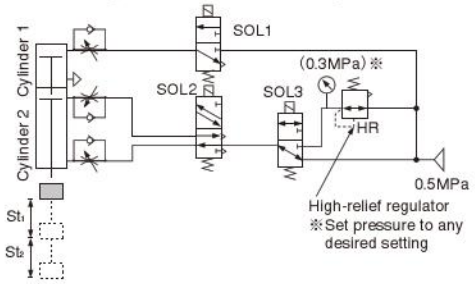

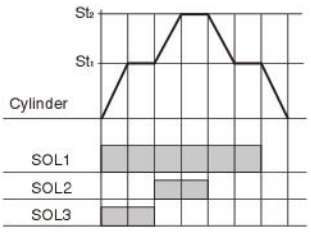

Major Parts and Materials

Parts \ Bore mm	ϕ 12	ϕ 16	ϕ 20	ϕ 25	ϕ 32	ϕ 40	ϕ 50	ϕ 63	ϕ 80	ϕ 100
Cylinder body	Aluminum alloy (anodized)									
Piston	Aluminum alloy (special rust prevention treatment)									
Piston rod	Stainless steel (chrome plated)				Steel (chrome plated)					
Seal	Synthetic rubber (NBR)									
Rod cover	Aluminum alloy (special wear-resistant treatment)									
Head cover	Aluminum alloy (anodized)									
Snap ring	Steel (phosphate coating)									
Spring	Piano wire							—		
Spacer	Aluminum alloy (special rust prevention treatment)							—		
Bumper	Synthetic rubber (NBR; urethane for ϕ 12 only)									
Magnet	Plastic magnet									
Support	Aluminum alloy (special rust prevention treatment)									

Seals

Parts / Bore mm	Rod seal	Piston seal	Tube gasket		Gasket for joint section
			Rod side	Head side	
ϕ 12	MYR-6	COP-12	Y090260	None	Y090119
ϕ 16	MYR-8	COP-16	Y090207	None	M202208
ϕ 20	MYR-10	COP-20(MYA-16)	Y090216	None	L090134
ϕ 25	MYR-12	COP-25(MYA-21)	Y090210	None	Y090196
ϕ 32	MYR-16	COP-32	L090084	None	L090015
ϕ 40	MYR-16	COP-40	L090151	None	L090028
ϕ 50	MYR-20	COP-50	L090174	L090106	None
ϕ 63	MYR-20	COP-63	L090180	L090107	None
ϕ 80	PNY-25	COP-80	L090171	L090108	None
ϕ 100	PNY-32	COP-100	L090172	L090109	None

Note: Items in parentheses ( ) are for the single acting type.

Mass

●Double acting type

g [oz.]

Bore size mm [in.]	Zero stroke mass Note1	Additional mass for each 1mm [0.0394in.] of stroke1	Additional mass for each 1mm [0.0394in.] of stroke2	Additional mass of cylinder with bumper	Additional mass of cylinder with magnet	Mass of mounting bracket	Additional mass of sensor switch Note2	
						Flange bracket	**ZE□□□A**	**ZE□□□B**
12 [0.472]	44.26 [1.561]	2.68 [0.095]	1.28 [0.045]	13.39 [0.472]	13.73 [0.484]	55 [1.94]	15 [0.53]	35 [1.23]
16 [0.630]	61.11 [2.156]	3.34 [0.118]	1.62 [0.057]	16.71 [0.589]	20.41 [0.720]	71 [2.50]		
20 [0.787]	96.79 [3.414]	4.63 [0.163]	2.26 [0.080]	23.14 [0.816]	52.54 [1.853]	101 [3.56]		
25 [0.984]	147.69 [5.210]	6.41 [0.226]	3.11 [0.110]	32.05 [1.131]	76.92 [2.713]	160 [5.64]		
32 [1.260]	220.3 [7.771]	8.43 [0.297]	4.11 [0.145]	42.13 [1.486]	106.84 [3.769]	186 [6.56]		
40 [1.575]	345.12 [12.174]	9.85 [0.347]	4.77 [0.168]	0	141.38 [4.987]	335 [11.82]		
50 [1.969]	562.47 [19.840]	14.51 [0.512]	7.03 [0.248]	0	220.44 [7.776]	447 [15.77]		
63 [2.480]	890.99 [31.428]	17.83 [0.629]	8.69 [0.307]	0	322.44 [11.374]	591 [20.85]		
80 [3.150]	1770.07 [62.436]	26.91 [0.949]	13.06 [0.461]	0	497.9 [17.563]	1414 [49.88]		
100 [3.940]	3252 [114.7]	38.46 [1.357]	18.61 [0.656]	0	732.34 [25.832]	2606 [91.92]		

Notes: 1. The above table is for the standard strokes.
2. Sensor switch codes A and B show the lead wire lengths.
A: 1000mm [39in.] B: 3000mm [118in.]

Calculation example: For the mass of a double acting type cylinder with magnet, bore size of 25mm, 30mm for stroke1, 10mm for stroke2, and 2 sensor switches (**ZE135A**)
147.69+(6.41×30)+(3.11×10)+76.92+(15×2)=478.01g [16.861oz.]

●Single acting push type

g [oz.]

Bore size mm [in.]	Zero stroke mass Note1			Additional mass for each 1mm [0.0394in.] of stroke1	Additional mass for each 1mm [0.0394in.] of stroke2	Additional mass of cylinder with magnet	Mass of mounting bracket	Additional mass of sensor switch Note2	
	Stroke1								
	5～15 (ϕ 50: 10～20)		**16～30 (ϕ 50: 21～40)**						
	Stroke1+Stroke2								
	5～15 (ϕ 50: 10～20)	**16～30 (ϕ 50: 21～40)**					Flange bracket	**ZE□□□A**	**ZE□□□B**
12 [0.472]	55.88 [1.971]	69.98 [2.468]	85.21 [3.006]	2.68 [0.0945]	1.28 [0.0451]	16.11 [0.568]	55 [1.94]	15 [0.53]	35 [1.23]
16 [0.630]	80.31 [2.833]	99.64 [3.515]	120.1 [4.236]	3.34 [0.118]	1.62 [0.0571]	21.21 [0.748]	71 [2.50]		
20 [0.787]	96.88 [3.417]	124.84 [4.404]	153.93 [5.430]	4.63 [0.163]	2.26 [0.0797]	51.89 [1.830]	101 [3.56]		
25 [0.984]	147.45 [5.201]	186 [6.561]	226.53 [7.990]	6.41 [0.226]	3.11 [0.110]	80.18 [2.828]	160 [5.64]		
32 [1.260]	223.01 [7.866]	306.96 [10.828]	393.89 [13.894]	8.43 [0.297]	4.11 [0.145]	103.14 [3.638]	186 [6.56]		
40 [1.575]	345.03 [12.170]	453.44 [15.994]	566.48 [19.982]	9.85 [0.347]	4.77 [0.168]	141.93 [5.006]	335 [11.82]		
50 [1.969]	561.93 [19.821]	691.19 [24.381]	827.1 [29.175]	14.51 [0.512]	7.03 [0.248]	216.54 [7.638]	447 [15.77]		

Notes 1: The above table is for the standard strokes.
2: Sensor switch codes A and B show the lead wire lengths.
A: 1000mm [39in.] B: 3000mm [118in.]

Calculation example: For the mass of a single acting push type cylinder with magnet, bore size of 25mm, 10mm for stroke1, 20mm for stroke2, and 2 sensor switches (**ZE135A**)
186+(6.41×10)+(3.11×20)+80.18+(15×2)=422.48g [14.902oz.]

Dimensions of Tandem Cylinder Double Acting Type (mm)

● ϕ12～ϕ25

CDAT Bore size

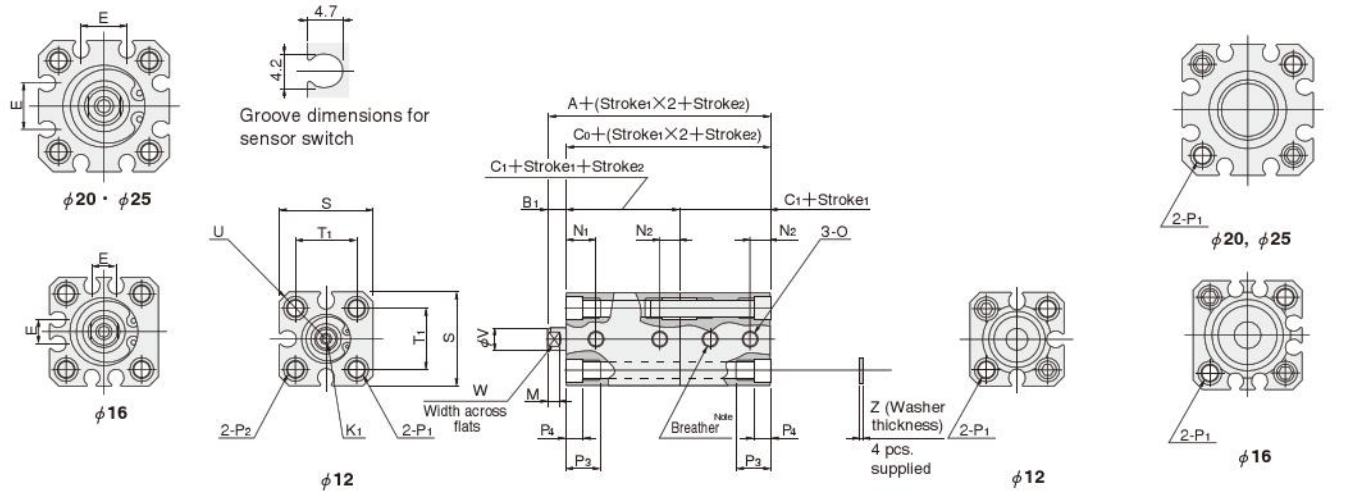

Note: Mufflers, etc. are not included.
Install a muffler when using in places exposed to dust, etc.

● The drawing is for ϕ 12.

● ϕ32～ϕ100

CDAT Bore size

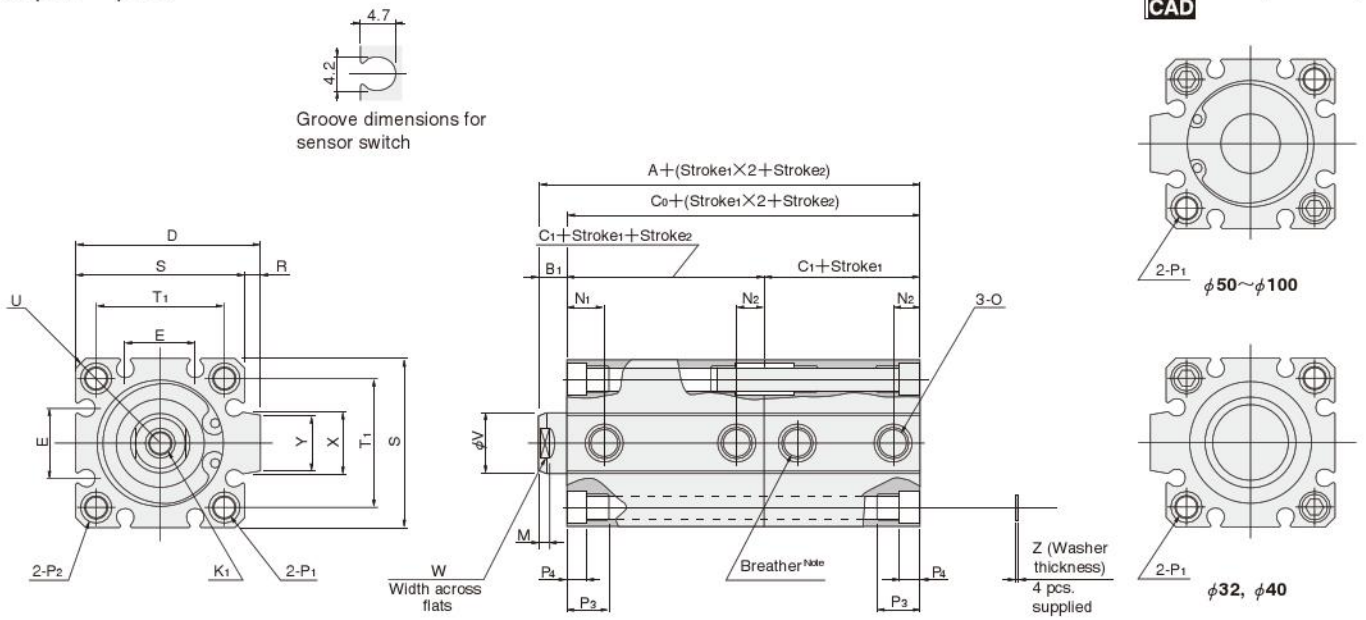

Note: Mufflers, etc. are not included.
Install a muffler when using in places exposed to dust, etc.

Type / Code / Bore mm [in.]	Standard cylinder (CDAT)				Cylinder with magnet (CDATS)				Standard cylinder with bumper (CDAT-R)				Cylinder with magnet with bumper (CDATS-R)				D	E	K_1	M	N_1	N_2	O
	A	B_1	C_0	C_1	A	B_1	C_0	C_1	A	B_1	C_0	C_1	A	B_1	C_0	C_1							
12 [0.472]	39	5	34	17	49	5	44	22	49	5	44	22	59	5	54	27	—	—	M3×0.5 Depth6	3.5	8	5	M5×0.8
16 [0.630]	39.5	5.5	34	17	49.5	5.5	44	22	49.5	5.5	44	22	59.5	5.5	54	27	—	6.2	M4×0.7 Depth8	3.5	8	5	M5×0.8
20 [0.787]	44.5	5.5	39	19.5	64.5	5.5	59	29.5	54.5	5.5	49	24.5	74.5	5.5	69	34.5	—	12.2	M5×0.8 Depth10	4.5	9.5	5	M5×0.8
25 [0.984]	48	6	42	21	68	6	62	31	58	6	52	26	78	6	72	36	—	12.2	M6×1 Depth10	5	10.5	5	M5×0.8
32 [1.260]	53	7	46	23	73	7	66	33	63	7	56	28	73	7	66	33	48.5	18.2	M8×1.25 Depth12	6	9.5	7.5(6)	Rc1/8
40 [1.575]	59	7	52	26	79	7	72	36	59	7	52	26	79	7	72	36	56.5	18.2	M8×1.25 Depth12	6	10.5	7.5	Rc1/8
50 [1.969]	65	9	56	28	85	9	76	38	65	9	56	28	85	9	76	38	70	24.8	M10×1.5 Depth15	7	11	9.5	Rc1/4
63 [2.480]	73	9	64	32	93	9	84	42	73	9	64	32	93	9	84	42	83	26.8	M10×1.5 Depth15	7	12.5	11	Rc1/4
80 [3.150]	93	11	82	41	113	11	102	51	93	11	82	41	113	11	102	51	102	32.8	M14×2 Depth20	9	18	12	Rc3/8
100 [3.940]	114	12	102	51	134	12	122	61	114	12	102	51	134	12	122	61	122	32.8	M18×2.5 Depth20	9	22.5	16.5	Rc3/8

Code / Bore mm [in.]	P_1	P_2	P_3	P_4	R	S	T_1	U	V	W	X	Y	Z	Appropriate through bolt※
12 [0.472]	φ4.3 (Thru hole) C'bore φ6.5 (Both sides) and M5×0.8 (Both sides)	Counterbore φ6.5 and M5×0.8	9.5	4.5	—	25	16.3	R16	6	5	—	—	1	M3
16 [0.630]	φ4.3 (Thru hole) C'bore φ6.5 (Both sides) and M5×0.8 (Both sides)	Counterbore φ6.5 and M5×0.8	9.5	4.5	—	29	19.8	R19	8	6	—	—	1	M3
20 [0.787]	φ4.3 (Thru hole) C'bore φ6.5 (Both sides) and M5×0.8 (Both sides)	Counterbore φ6.5 and M5×0.8	9.5	4.5	—	34	24	R22	10	8	—	—	1	M3
25 [0.984]	φ5.1 (Thru hole) C'bore φ8 (Both sides) and M6×1 (Both sides)	Counterbore φ8 and M6×1	11.5	5.5	—	40	28	R25	12	10	—	—	1	M4
32 [1.260]	φ5.1 (Thru hole) C'bore φ8 (Both sides) and M6×1 (Both sides)	Counterbore φ8 and M6×1	11.5	5.5	4.5	44	34	R29.5	16	14	15	13.6	1	M4
40 [1.575]	φ6.9 (Thru hole) C'bore φ9.5 (Both sides) and M8×1.25 (Both sides)	Counterbore φ9.5 and M8×1.25	15.5	7.5	4.5	52	40	R35	16	14	15	13.6	1.6	M5
50 [1.969]	φ6.9 (Thru hole) C'bore φ11 (Both sides) and M8×1.25 (Both sides)	Counterbore φ11 and M8×1.25	16.5	8.5	8	62	48	R41	20	17	21.6	19	1.6	M6
63 [2.480]	φ6.9 (Thru hole) C'bore φ11 (Both sides) and M8×1.25 (Both sides)	Counterbore φ11 and M8×1.25	16.5	8.5	8	75	60	R50	20	17	21.6	19	1.6	M6
80 [3.150]	φ10.5 (Thru hole) C'bore φ14 (Both sides) and M12×1.75 (Both sides)	Counterbore φ14 and M12×1.75	22.5	10.5	8	94	74	R62	25	22	27.6	25	1.6	M8
100 [3.940]	φ12.3 (Thru hole) C'bore φ17.5 (Both sides) and M14×2 (Both sides)	Counterbore φ17.5 and M14×2	27	13	8	114	90	R75	32	27	27.6	25	2	M10

Note: Figure in parentheses ( ) is for the standard cylinder (**CDAT**) when stroke1, or stroke1 + stroke2 is 5mm.
※Some types of mounting screws are available (to be ordered separately). See p.209.

Dimensions of Tandem Cylinder Single Acting Push Type (mm)

● ϕ12～ϕ25

CSAT Bore size

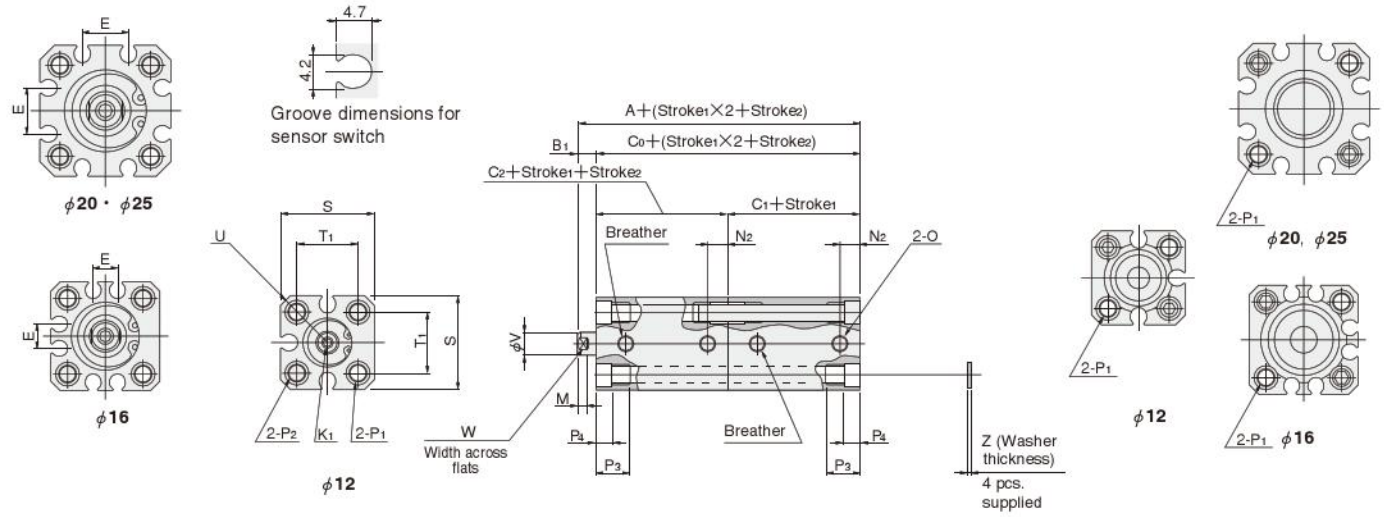

● The drawing is for ϕ 12.

● ϕ32～ϕ50

CSAT Bore size

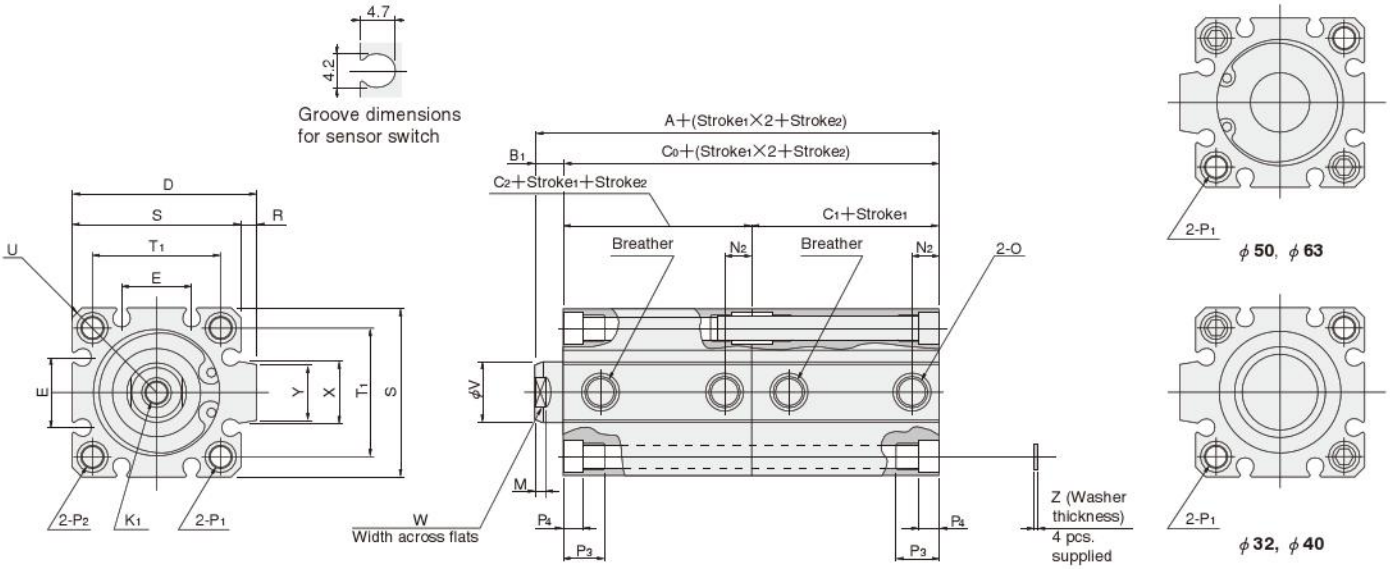

Bore mm [in.]	Code	Standard cylinder (CSAT) 5～15 (φ50: 10～20) A	B1	C0	C1	C2	16～30 (φ50: 21～40) A	B1	C0	C1	C2	Cylinder with magnet (CSATS) 5～15 (φ50: 10～20) A	B1	C0	C1	C2	16～30 (φ50: 21～40) A	B1	C0	C1	C2
12 [0.472]	D1	49	5	44	22	22	—	—	—	—	—	59	5	54	27	27	—	—	—	—	—
	D2	59		54		32	69	5	64	32	32	69		64		37	79	5	74	37	37
16 [0.630]	D1	49.5	5.5	44	22	22	—	—	—	—	—	59.5	5.5	54	27	27	—	—	—	—	—
	D2	59.5		54		32	69.5	5.5	64	32	32	69.5		64		37	79.5	5.5	74	37	37
20 [0.787]	D1	44.5	5.5	39	19.5	19.5	—	—	—	—	—	64.5	5.5	59	29.5	29.5	—	—	—	—	—
	D2	54.5		49		29.5	64.5	5.5	59	29.5	29.5	74.5		69		39.5	84.5	5.5	79	39.5	39.5
25 [0.984]	D1	48	6	42	21	21	—	—	—	—	—	68	6	62	31	31	—	—	—	—	—
	D2	58		52		31	68	6	62	31	31	78		72		41	88	6	82	41	41
32 [1.260]	D1	53	7	46	23	23	—	—	—	—	—	73	7	66	33	33	—	—	—	—	—
	D2	68		61		38	83	7	76	38	38	88		81		48	103	7	96	48	48
40 [1.575]	D1	59	7	52	26	26	—	—	—	—	—	79	7	72	36	36	—	—	—	—	—
	D2	74		67		41	89	7	82	41	41	94		87		51	109	7	102	51	51
50 [1.969]	D1	65	9	56	28	28	—	—	—	—	—	85	9	76	38	38	—	—	—	—	—
	D2	80		71		43	95	9	86	43	43	100		91		53	115	9	106	53	53

Bore mm [in.]	Code	D	E	K1	M	N2	O	P1
12 [0.472]	D1	—	—	M3×0.5 Depth6	3.5	5	M5×0.8	φ4.3 (Thru hole) Counterbore φ6.5 (Both sides) and M5×0.8 (Both sides)
	D2							
16 [0.630]	D1	—	6.2	M4×0.7 Depth8	3.5	5	M5×0.8	φ4.3 (Thru hole) Counterbore φ6.5 (Both sides) and M5×0.8 (Both sides)
	D2							
20 [0.787]	D1	—	12.2	M5×0.8 Depth10	4.5	5	M5×0.8	φ4.3 (Thru hole) Counterbore φ6.5 (Both sides) and M5×0.8 (Both sides)
	D2							
25 [0.984]	D1	—	12.2	M6×1 Depth10	5	5	M5×0.8	φ5.1 (Thru hole) Counterbore φ8 (Both sides) and M6×1 (Both sides)
	D2							
32 [1.260]	D1	48.5	18.2	M8×1.25 Depth12	6	7.5	Rc1/8	φ5.1 (Thru hole) Counterbore φ8 (Both sides) and M6×1 (Both sides)
	D2							
40 [1.575]	D1	56.5	18.2	M8×1.25 Depth12	6	7.5	Rc1/8	φ6.9 (Thru hole) Counterbore φ9.5 (Both sides) and M8×1.25 (Both sides)
	D2							
50 [1.969]	D1	70	24.8	M10×1.5 Depth15	7	9.5	Rc1/4	φ6.9 (Thru hole) Counterbore φ11 (Both sides) and M8×1.25 (Both sides)
	D2							

Bore mm [in.]	Code	P2	P3	P4	R	S	T1	U	V	W	X	Y	Z	Appropriate through bolt※
12 [0.472]	D1	Counterbore φ6.5 and M5×0.8	9.5	4.5	—	25	16.3	R16	6	5	—	—	1	M3
	D2													
16 [0.630]	D1	Counterbore φ6.5 and M5×0.8	9.5	4.5	—	29	19.8	R19	8	6	—	—	1	M3
	D2													
20 [0.787]	D1	Counterbore φ6.5 and M5×0.8	9.5	4.5	—	34	24	R22	10	8	—	—	1	M3
	D2													
25 [0.984]	D1	Counterbore φ8 and M6×1	11.5	5.5	—	40	28	R25	12	10	—	—	1	M4
	D2													
32 [1.260]	D1	Counterbore φ8 and M6×1	11.5	5.5	4.5	44	34	R29.5	16	14	15	13.6	1	M4
	D2													
40 [1.575]	D1	Counterbore φ9.5 and M8×1.25	15.5	7.5	4.5	52	40	R35	16	14	15	13.6	1.6	M5
	D2													
50 [1.969]	D1	Counterbore φ11 and M8×1.25	16.5	8.5	8	62	48	R41	20	17	21.6	19	1.6	M6
	D2													

Notes: D1 is when stroke1 + stroke2 is 5～15 (φ50: 10～20) mm.
D2 is when stroke1 + stroke2 is 16～30 (φ50: 21～40) mm.
※ Some types of mounting screws are available (to be ordered separately). See p.209.

Dimensions of Male Rod End Thread Specification (mm)

CAD Available in the file of each cylinder body.

● Double acting type, Single acting push type

● ϕ12～ϕ25

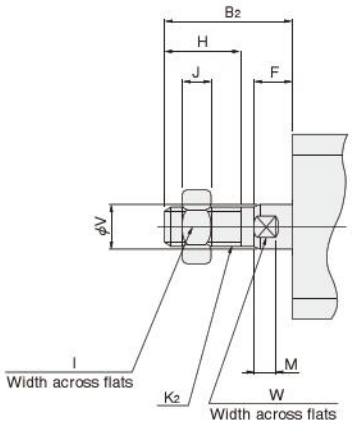

● ϕ32～ϕ100
(Single acting type available up to ϕ50)

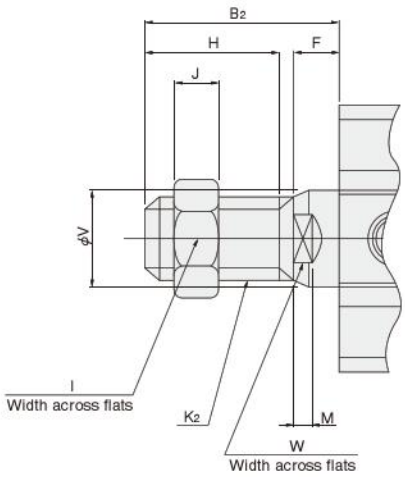

Bore mm [in.] \ Code	B_2	F	H	I	J	K_2	M	V	W
12 [0.472]	17	5	10	8	4	M5×0.8	3.5	6	5
16 [0.630]	20.5	5.5	13	10	5	M6×1	3.5	8	6
20 [0.787]	22.5	5.5	15	12	5	M8×1	4.5	10	8
25 [0.984]	24	6	15	14	6	M10×1.25	5	12	10
32 [1.260]	35	7	25	19	8	M14×1.5	6	16	14
40 [1.575]	35	7	25	19	8	M14×1.5	6	16	14
50 [1.969]	37	9	25	27	11	M18×1.5	7	20	17
63 [2.480]	37	9	25	27	11	M18×1.5	7	20	17
80 [3.150]	44	11	30	32	13	M22×1.5	9	25	22
100 [3.940]	50	12	35	36	14	M26×1.5	9	32	27

Remark: Cylinder joints and cylinder rod ends are available for mounting with the rod end male thread specification. For details, see p.1568.

Dimensions of Centering Location (mm)

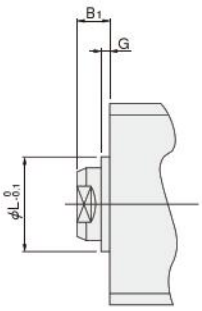

●Not available for bore size ϕ12.

Bore mm [in.] \ Code	B_1	G	L
16 [0.630]	5.5	1.5	9.4
20 [0.787]	5.5	1.5	12
25 [0.984]	6	2	15
32 [1.260]	7	2	21
40 [1.575]	7	2	29
50 [1.969]	9	2	38
63 [2.480]	9	2	40
80 [3.150]	11	2	45
100 [3.940]	12	2	55

JIG CYLINDERS C SERIES DUAL STROKE CYLINDERS

Double Acting Type, Single Acting Push Type, Single Acting Pull Type

Symbols

● **Double acting type** ● **Single acting push type** ● **Single acting pull type**

Operation of Dual Stroke Cylinders

Dual Stroke Cylinders are a set of 2 cylinders connected back to back.
The cylinder body can be secured in place and each stroke can be controlled separately. It can also be used to obtain 2-stage or 3-stage strokes by securing the piston rod on one side in place.

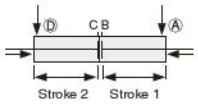

The rods retract stroke 1 and stroke 2 when air is supplied from Ports Ⓐ and Ⓓ.

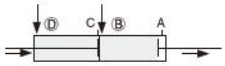

The rod moves stroke 1 when air is supplied from Ports Ⓑ and Ⓓ.

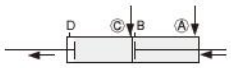

The rod moves stroke 2 when air is supplied from Ports Ⓐ and Ⓒ.

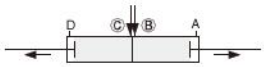

The rod moves stroke 1 and stroke 2 when air is supplied from Ports Ⓑ and Ⓒ.

Specifications

Item \ Bore size mm [in.]		12 [0.472]	16 [0.630]	20 [0.787]	25 [0.984]	32 [1.260]	40 [1.575]	50 [1.969]	63 [2.480]	80 [3.150]	100 [3.940]
Operation type		Double acting type, Single acting push type, Single acting pull type							Double acting type		
Media		Air									
Operating pressure range MPa [psi.]	Double acting type	0.1～1.0 [15～145]						0.05～1.0 [7～145]			
	Single acting type	0.15～1.0 Note1 [22～145]						0.1～1.0 [15～145]	—		
Proof pressure MPa [psi.]		1.5 [218]									
Operating temperature range °C [°F]		0～60 [32～140] (The heat resistant specification is 120 [248]. Note2)									
Operating speed range mm/s [in./sec.]	Double acting type	30～500 [1.2～19.7]						30～300 [1.2～11.8]			
	Single acting type	100～500 [3.9～19.7]						100～300 [3.9～11.8]	—		
Cushion	Double acting type	Rubber bumper (Option Note2)									
	Single acting type	None							—		
Lubrication		Not required (If lubrication is required, use Turbine Oil Class 1 [**ISO VG32**] or equivalent.)									
Port size		M5×0.8				Rc1/8		Rc1/4		Rc3/8	

Remark: For Handling Instructions and Precautions, see p.205.
Notes: 1. The single acting pull type of ϕ 12 is 0.18～1.0MPa [26～145psi.].
2. For heat resistant specification, consult us.
3. Not available for heat resistant specification.

Bore Size and Stroke

For non-standard strokes, see p.206.

mm

Operation type	Bore size	Standard strokes	
		Standard cylinder	Cylinder with magnet
Double acting type	12	5, 10, 15, 20, 25, 30	5, 10, 15, 20, 25, 30
	16		
	20	5, 10, 15, 20, 25, 30, 35, 40, 45, 50	5, 10, 15, 20, 25, 30, 35, 40, 45, 50
	25		
	32	5, 10, 15, 20, 25, 30, 35, 40, 45, 50, 75, 100	5, 10, 15, 20, 25, 30, 35, 40, 45, 50, 75, 100
	40		
	50	10, 15, 20, 25, 30, 35, 40, 45, 50, 75, 100	10, 15, 20, 25, 30, 35, 40, 45, 50, 75, 100
	63		
	80		
	100		
Single acting type	12	5, 10, 15, 20, 25, 30	5, 10, 15, 20, 25, 30
	16		
	20		
	25		
	32		
	40		
	50	10, 15, 20, 25, 30, 35, 40	10, 15, 20, 25, 30, 35, 40

Remarks: 1. Stroke tolerance $^{+1}_{0}$ [$^{+0.039in.}_{0}$]
2. In most cases, body cutting is used for the non-standard strokes.
However, body cutting is not used for strokes of less than 5mm for ϕ 12～ϕ 40, and strokes of less than 10mm for ϕ 50～ϕ 100. The collar packed is used for these cases.

Order Codes for Dual Stroke Cylinders

Operation type

DA : Double acting type
SA : Single acting push type
TA : Single acting pull type

Rod end specification

Female thread

Male thread

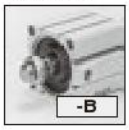

Mounting type

Basic type

Flange mounting type Note6

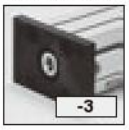

Sensor switch type Note5
(For cylinder with magnet)

Blank:
No sensor switch

-ZE135 : With ZE135
- 2-lead wire Solid state type
- With indicator lamp
- DC10～28V
- Horizontal lead wire

-ZE155 : With ZE155
- 3-lead wire Solid state type
- With indicator lamp
- DC4.5～28V
- Horizontal lead wire

-ZE235 : With ZE235
- 2-lead wire Solid state type
- With indicator lamp
- DC10～28V
- Vertical lead wire

-ZE255 : With ZE255
- 3-lead wire Solid state type
- With indicator lamp
- DC4.5～28V
- Vertical lead wire

-ZE101 : With ZE101
- 2-lead wire Reed switch type
- Without indicator lamp
- DC5～28V AC85～115V
- Horizontal lead wire

-ZE102 : With ZE102
- 2-lead wire Reed switch type
- With indicator lamp
- DC10～28V AC85～115V
- Horizontal lead wire

-ZE201 : With ZE201
- 2-lead wire Reed switch type
- Without indicator lamp
- DC5～28V AC85～115V
- Vertical lead wire

-ZE202 : With ZE202
- 2-lead wire Reed switch type
- With indicator lamp
- DC10～28V AC85～115V
- Vertical lead wire

Lead wire length

A : 1000mm [39in.]
B : 3000mm [118in.]

Number of sensor switches
(For cylinder with magnet)
Blank:
No sensor switch

1 : With 1 sensor switch
2 : With 2 sensor switches

Heat resistant specification

Blank : Standard cylinder Note1
F : Heat resistant cylinder Note2

Dual stroke cylinder

Cylinder specification

Blank : Standard cylinder Note1 (Non-ion specification)
S : Cylinder with magnet Note3 (Non-ion specification)

Bumper Note4

Blank : No bumper
-R : With bumper

Centering location Note7

Blank : No centering location
-G : With centering location

Basic type					Bore size × Stroke							
C	DA SA TA	F	W	S	Bore size × Stroke1 × Stroke2	-B Note8	-R	-G	-3	-ZE135 -ZE155 -ZE235 -ZE255 -ZE101 -ZE102 -ZE201 -ZE202	A B	1 2 ⋮ n

● See table for bore size and stroke.

● Mounting brackets are included at shipping.

● For the order codes of sensor switches only, see p.199.

Notes: 1. In the standard cylinder, a magnet for the sensor switch is not built-in.
2. Not available for the cylinder with magnet or the cylinder with bumper.
3. Not available in heat resistant specification.
4. For the double acting type only. Not available for heat resistant specification.
5. For details of sensor switches, see p.1544.
6. The flange mounting bracket can be mounted on the end of cylinder 2 only. Moreover, it cannot be mounted on the bore size ϕ 40 with centering location (**-G**).
7. Not available for the bore size ϕ 12.
8. For information regarding the cylinder joint and cylinder rod end for male thread, see p.1568.

Additional Parts (To be ordered separately)

Flange mounting bracket (p.198)

Mounting screws (p.209)

Inner Construction and Major Parts

● Double acting type (CDAW)

● ϕ12～ϕ40

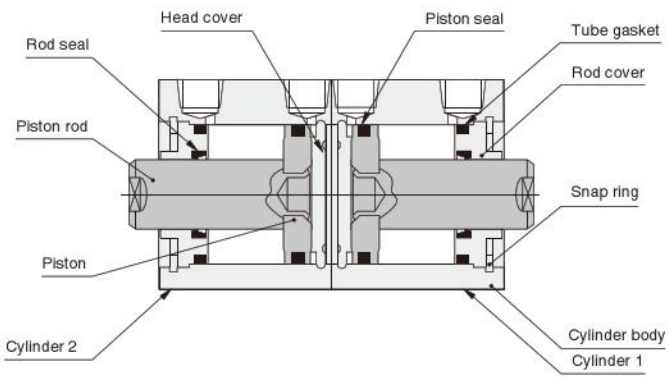

● ϕ50～ϕ100

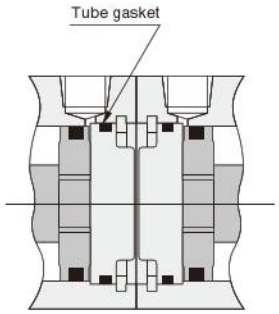

● Single acting push type (CSAW)

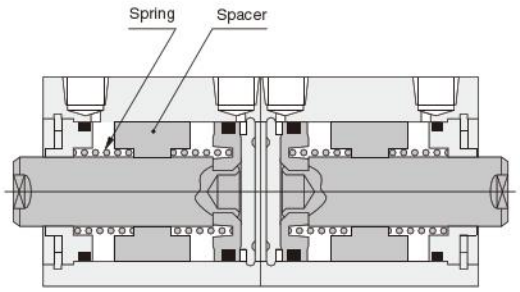

● Single acting pull type (CTAW)

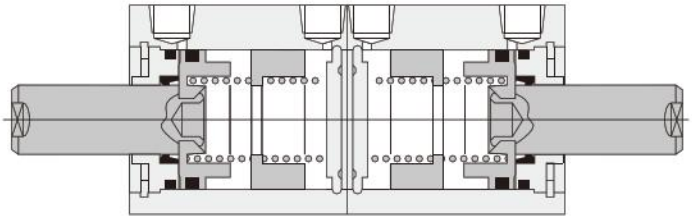

● Cylinder with magnet

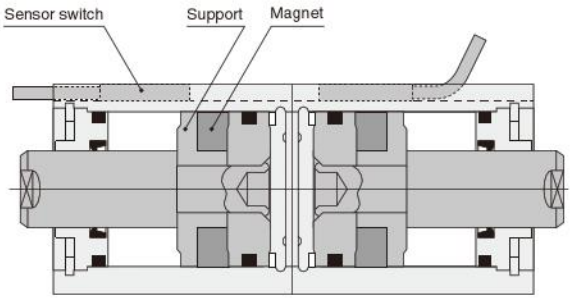

● With bumper

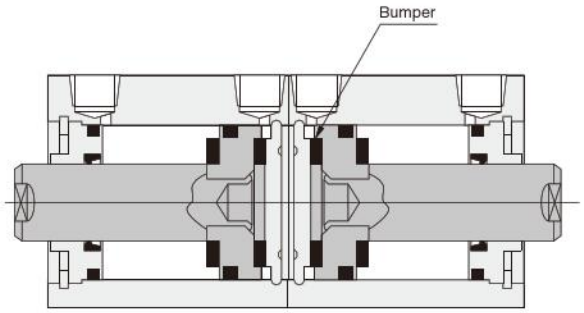

Major Parts and Materials

Parts \ Bore mm	ϕ 12	ϕ 16	ϕ 20	ϕ 25	ϕ 32	ϕ 40	ϕ 50	ϕ 63	ϕ 80	ϕ 100
Cylinder body	Aluminum alloy (anodized)									
Piston	Aluminum alloy (special rust prevention treatment)									
Piston rod	Stainless steel (chrome plated)				Steel (chrome plated)					
Seal	Synthetic rubber (NBR)									
Rod cover	Aluminum alloy (special wear-resistant treatment)									
Head cover	Aluminum alloy (anodized)									
Snap ring	Steel (phosphate coating)									
Spring	Piano wire							—		
Spacer	Aluminum alloy (special rust prevention treatment)							—		
Bumper	Synthetic rubber (NBR; urethane for ϕ 12 only)									
Magnet	Plastic magnet									
Support	Aluminum alloy (special rust prevention treatment)									

Seals

Parts / Bore mm	Rod seal	Piston seal	Tube gasket	
			Rod side	Head side
ϕ 12	MYR-6	COP-12	Y090260	None
ϕ 16	MYR-8	COP-16	Y090207	None
ϕ 20	MYR-10	COP-20(MYA-16)	Y090216	None
ϕ 25	MYR-12	COP-25(MYA-21)	Y090210	None
ϕ 32	MYR-16	COP-32	L090084	None
ϕ 40	MYR-16	COP-40	L090151	None
ϕ 50	MYR-20	COP-50	L090174	L090106
ϕ 63	MYR-20	COP-63	L090180	L090107
ϕ 80	PNY-25	COP-80	L090171	L090108
ϕ 100	PNY-32	COP-100	L090172	L090109

Note: Items in parentheses ( ) are for the single acting type.

Mass

Dual stroke

● Double acting type

g [oz.]

Bore size mm [in.]	Zero stroke mass Note1	Additional mass for each 1mm [0.0394in.] of stroke1	Additional mass for each 1mm [0.0394in.] of stroke2	Additional mass of cylinder with bumper	Additional mass of cylinder with magnet	Mass of mounting bracket	Additional mass of sensor switch Note2	
						Flange bracket	ZE□□□A	ZE□□□B
12 [0.472]	44.26 [1.561]	1.4 [0.0494]	1.28 [0.0451]	13.39 [0.472]	13.73 [0.484]	55 [1.94]	15 [0.53]	35 [1.23]
16 [0.630]	61.11 [2.156]	1.73 [0.0610]	1.62 [0.0571]	16.71 [0.589]	20.41 [0.720]	71 [2.50]		
20 [0.787]	96.79 [3.414]	2.37 [0.0836]	2.26 [0.0797]	23.14 [0.816]	52.54 [1.853]	101 [3.56]		
25 [0.984]	147.69 [5.210]	3.3 [0.116]	3.11 [0.110]	32.05 [1.131]	76.92 [2.713]	160 [5.64]		
32 [1.260]	220.3 [7.771]	4.31 [0.152]	4.11 [0.145]	42.13 [1.486]	106.84 [3.769]	186 [6.56]		
40 [1.575]	345.12 [12.174]	5.08 [0.179]	4.77 [0.168]	0	141.38 [4.987]	335 [11.82]		
50 [1.969]	562.47 [19.840]	7.48 [0.264]	7.03 [0.248]	0	220.44 [7.776]	447 [15.77]		
63 [2.480]	896.12 [31.609]	9.14 [0.322]	8.69 [0.307]	0	322.4 [11.37]	591 [20.85]		
80 [3.150]	1755.88 [61.936]	13.51 [0.477]	13.06 [0.461]	0	494.4 [17.44]	1414 [49.88]		
100 [3.940]	3207.76 [113.15]	19.06 [0.672]	18.61 [0.656]	0	724.4 [25.55]	2606 [91.92]		

Notes 1: The above table is for the standard strokes.
2: Sensor switch codes A and B show the lead wire lengths.
A: 1000mm [39in.] B: 3000mm [118in.]

Calculation example: For the mass of a double acting type cylinder with magnet, bore size of 25mm, 30mm for stroke 1, 10mm for stroke 2, and with 2 sensor switches (**ZE135A**)
147.69＋(3.3×30)＋(3.11×10)＋76.92＋(15×2)＝384.71g [13.570oz.]

Dual stroke

● Single acting push type

g [oz.]

Bore size mm [in.]	Zero stroke mass Note1				Additional mass for each 1mm [0.0394in.] of stroke1	Additional mass for each 1mm [0.0394in.] of stroke2	Additional mass of cylinder with magnet	Mass of mounting bracket	Additional mass of sensor switch Note2	
	Stroke1									
	5～15 (φ 50: 10～20)		**16～30 (φ 50: 21～40)**							
	Stroke2							Flange bracket	ZE□□□A	ZE□□□B
	5～15 (φ 50: 10～20)	16～30 (φ 50: 21～40)	5～15 (φ 50: 10～20)	16～30 (φ 50: 21～40)						
12 [0.472]	55.88 [1.971]	69.98 [2.468]	71.1 [2.508]	85.21 [3.006]	1.4 [0.0494]	1.28 [0.0451]	16.11 [0.568]	55 [1.94]	15 [0.53]	35 [1.23]
16 [0.630]	80.31 [2.833]	99.64 [3.515]	100.76 [3.554]	120.1 [4.236]	1.73 [0.0610]	1.62 [0.0571]	21.21 [0.748]	71 [2.50]		
20 [0.787]	96.88 [3.417]	124.84 [4.404]	125.96 [4.443]	153.93 [5.430]	2.37 [0.0836]	2.26 [0.0797]	51.89 [1.830]	101 [3.56]		
25 [0.984]	147.45 [5.201]	186 [6.561]	187.98 [6.631]	226.53 [7.990]	3.3 [0.116]	3.11 [0.110]	80.18 [2.828]	160 [5.64]		
32 [1.260]	223.01 [7.866]	306.96 [10.828]	309.93 [10.932]	393.89 [13.894]	4.31 [0.152]	4.11 [0.145]	103.14 [3.638]	186 [6.56]		
40 [1.575]	345.03 [12.170]	453.44 [15.994]	458.06 [16.157]	566.48 [19.982]	5.08 [0.179]	4.77 [0.168]	141.93 [5.006]	335 [11.82]		
50 [1.969]	561.93 [19.821]	691.19 [24.381]	697.85 [24.616]	827.1 [29.175]	7.48 [0.264]	7.03 [0.248]	216.54 [7.638]	447 [15.77]		

Notes 1: The above table is for the standard strokes.
2: Sensor switch codes A and B show the lead wire lengths.
A: 1000mm [39in.] B: 3000mm [118in.]

Calculation example: For the mass of a single acting push type cylinder with magnet, bore size of 25mm, 20mm for stroke 1, 20mm for stroke 2, and with 2 sensor switches (**ZE135A**)
226.53＋(3.3×20)＋(3.11×20)＋80.18＋(15×2)＝464.91g [16.399oz.]

Dual stroke

● Single acting pull type

g [oz.]

Bore size mm [in.]	Zero stroke mass Note1				Additional mass for each 1mm [0.0394in.] of stroke1	Additional mass for each 1mm [0.0394in.] of stroke2	Additional mass of cylinder with magnet	Mass of mounting bracket	Additional mass of sensor switch Note2	
	Stroke1									
	5～15 (φ 50: 10～20)		**16～30 (φ 50: 21～40)**							
	Stroke2							Flange bracket	ZE□□□A	ZE□□□B
	5～15 (φ 50: 10～20)	16～30 (φ 50: 21～40)	5～15 (φ 50: 10～20)	16～30 (φ 50: 21～40)						
12 [0.472]	54.88 [1.936]	66.76 [2.355]	67.88 [2.394]	79.77 [2.814]	1.4 [0.0494]	1.28 [0.0451]	17.67 [0.623]	55 [1.94]	15 [0.53]	35 [1.23]
16 [0.630]	78.77 [2.778]	94.15 [3.321]	95.27 [3.360]	110.66 [3.903]	1.73 [0.0610]	1.62 [0.0571]	23.31 [0.822]	71 [2.50]		
20 [0.787]	117.58 [4.147]	139.48 [4.920]	140.6 [4.959]	162.49 [5.732]	2.37 [0.0836]	2.26 [0.0797]	53.74 [1.896]	101 [3.56]		
25 [0.984]	175.72 [6.198]	205.63 [7.253]	207.61 [7.323]	237.52 [8.378]	3.3 [0.116]	3.11 [0.110]	78.89 [2.783]	160 [5.64]		
32 [1.260]	255.75 [9.021]	316.83 [11.176]	319.8 [11.280]	380.88 [13.435]	4.31 [0.152]	4.11 [0.145]	105.39 [3.717]	186 [6.56]		
40 [1.575]	395.6 [13.954]	480.5 [16.949]	485.12 [17.112]	570.02 [20.107]	5.08 [0.179]	4.77 [0.168]	138.9 [4.899]	335 [11.82]		
50 [1.969]	634.13 [22.368]	726.4 [25.623]	733.06 [25.857]	825.32 [29.112]	7.48 [0.264]	7.03 [0.248]	144.56 [5.099]	447 [15.77]		

Notes 1: The above table is for the standard strokes.
2: Sensor switch codes A and B show the lead wire lengths.
A: 1000mm [39in.] B: 3000mm [118in.]

Calculation example: For the mass of a single acting pull type cylinder with magnet, bore size of 25mm, 20mm for stroke 1, 20mm for stroke 2, and with 2 sensor switches (**ZE135A**)
237.52＋(3.3×20)＋(3.11×20)＋78.89＋(15×2)＝474.61g [16.741oz.]

Dimensions of Dual Stroke Double Acting Type (mm)

● ϕ12～ϕ25

CAD CDAW Bore size

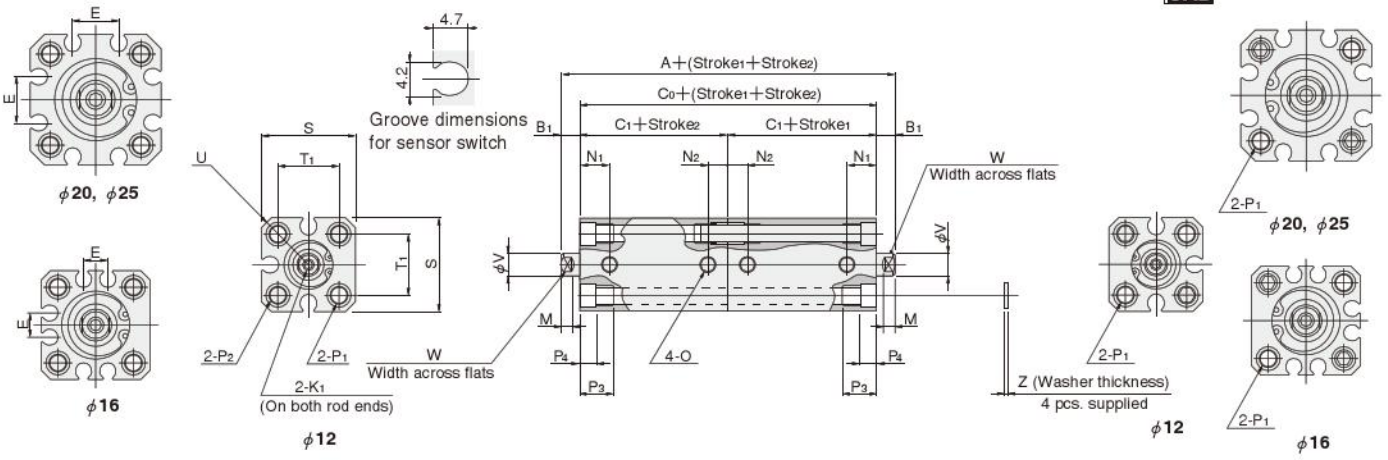

●The drawing is for ϕ 12.

● ϕ32～ϕ100

CAD CDAW Bore size

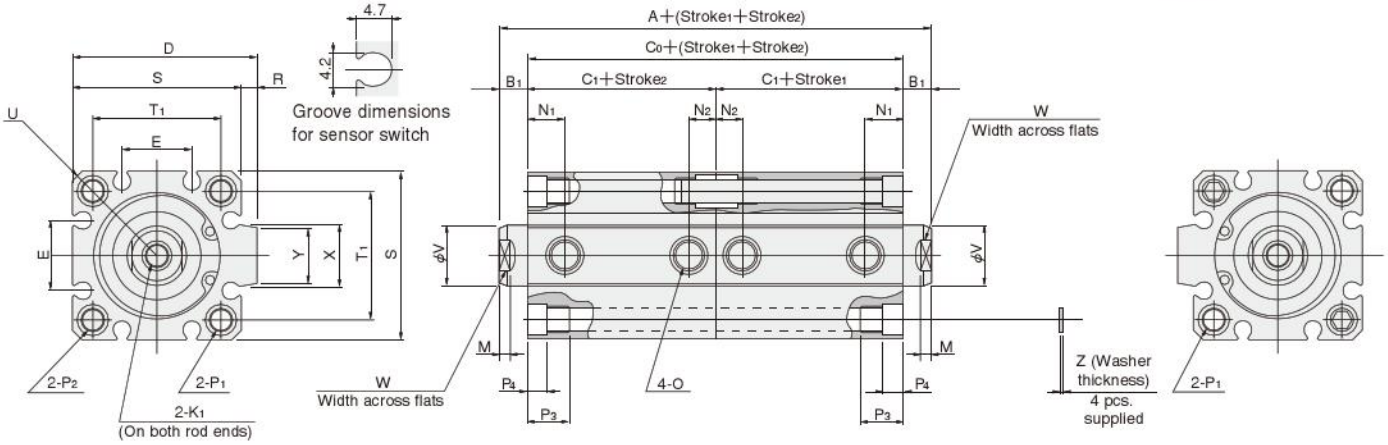

Type / Bore mm [in.] / Code	Standard cylinder (CDAW)				Cylinder with magnet (CDAWS)				Standard cylinder with bumper (CDAW-R)				Cylinder with magnet and bumper (CDAWS-R)				D	E	K1	M	N1	N2	O
	A	B1	C0	C1	A	B1	C0	C1	A	B1	C0	C1	A	B1	C0	C1							
12 [0.472]	44	5	34	17	54	5	44	22	54	5	44	22	64	5	54	27	—	—	M3X0.5 Depth6	3.5	8	5	M5X0.8
16 [0.630]	45	5.5	34	17	55	5.5	44	22	55	5.5	44	22	65	5.5	54	27	—	6.2	M4X0.7 Depth8	3.5	8	5	M5X0.8
20 [0.787]	50	5.5	39	19.5	70	5.5	59	29.5	60	5.5	49	24.5	80	5.5	69	34.5	—	12.2	M5X0.8 Depth10	4.5	9.5	5	M5X0.8
25 [0.984]	54	6	42	21	74	6	62	31	64	6	52	26	84	6	72	36	—	12.2	M6X1 Depth10	5	10.5	5	M5X0.8
32 [1.260]	60	7	46	23	80	7	66	33	70	7	56	28	80	7	66	33	48.5	18.2	M8X1.25 Depth12	6	9.5	7.5(6)	Rc1/8
40 [1.575]	66	7	52	26	86	7	72	36	66	7	52	26	86	7	72	36	56.5	18.2	M8X1.25 Depth12	6	10.5	7.5	Rc1/8
50 [1.969]	74	9	56	28	94	9	76	38	74	9	56	28	94	9	76	38	70	24.8	M10X1.5 Depth15	7	11	9.5	Rc1/4
63 [2.480]	82	9	64	32	102	9	84	42	82	9	64	32	102	9	84	42	83	26.8	M10X1.5 Depth15	7	12.5	11	Rc1/4
80 [3.150]	104	11	82	41	124	11	102	51	104	11	82	41	124	11	102	51	102	32.8	M14X2 Depth20	9	18	12	Rc3/8
100 [3.940]	126	12	102	51	146	12	122	61	126	12	102	51	146	12	122	61	122	32.8	M18X2.5 Depth20	9	22.5	16.5	Rc3/8

Bore mm [in.] / Code	P1	P2	P3	P4	R	S	T1	U	V	W	X	Y	Z	Appropriate through bolt※
12 [0.472]	ϕ4.3 (Thru hole) C'bore ϕ6.5 (Both sides) and M5X0.8 (Both sides)	Counterbore ϕ6.5 and M5X0.8	9.5	4.5	—	25	16.3	R16	6	5	—	—	1	M3
16 [0.630]	ϕ4.3 (Thru hole) C'bore ϕ6.5 (Both sides) and M5X0.8 (Both sides)	Counterbore ϕ6.5 and M5X0.8	9.5	4.5	—	29	19.8	R19	8	6	—	—	1	M3
20 [0.787]	ϕ4.3 (Thru hole) C'bore ϕ6.5 (Both sides) and M5X0.8 (Both sides)	Counterbore ϕ6.5 and M5X0.8	9.5	4.5	—	34	24	R22	10	8	—	—	1	M3
25 [0.984]	ϕ5.1 (Thru hole) C'bore ϕ8 (Both sides) and M6X1 (Both sides)	Counterbore ϕ8 and M6X1	11.5	5.5	—	40	28	R25	12	10	—	—	1	M4
32 [1.260]	ϕ5.1 (Thru hole) C'bore ϕ8 (Both sides) and M6X1 (Both sides)	Counterbore ϕ8 and M6X1	11.5	5.5	4.5	44	34	R29.5	16	14	15	13.6	1	M4
40 [1.575]	ϕ6.9 (Thru hole) C'bore ϕ9.5 (Both sides) and M8X1.25 (Both sides)	Counterbore ϕ9.5 and M8X1.25	15.5	7.5	4.5	52	40	R35	16	14	15	13.6	1.6	M5
50 [1.969]	ϕ6.9 (Thru hole) C'bore ϕ11 (Both sides) and M8X1.25 (Both sides)	Counterbore ϕ11 and M8X1.25	16.5	8.5	8	62	48	R41	20	17	21.6	19	1.6	M6
63 [2.480]	ϕ6.9 (Thru hole) C'bore ϕ11 (Both sides) and M8X1.25 (Both sides)	Counterbore ϕ11 and M8X1.25	16.5	8.5	8	75	60	R50	20	17	21.6	19	1.6	M6
80 [3.150]	ϕ10.5 (Thru hole) C'bore ϕ14 (Both sides) and M12X1.75 (Both sides)	Counterbore ϕ14 and M12X1.75	22.5	10.5	8	94	74	R62	25	22	27.6	25	1.6	M8
100 [3.940]	ϕ12.3 (Thru hole) C'bore ϕ17.5 (Both sides) and M14X2 (Both sides)	Counterbore ϕ17.5and M14X2	27	13	8	114	90	R75	32	27	27.6	25	2	M10

Note: Figure in parentheses ( ) is for the standard cylinder (**CDAW**) with 5mm stroke.
※Some types of mounting screws are available (to be ordered separately). See p.209.

Dimensions of Dual Stroke Single Acting Push Type (mm)

● ϕ12～ϕ25

CSAW Bore size

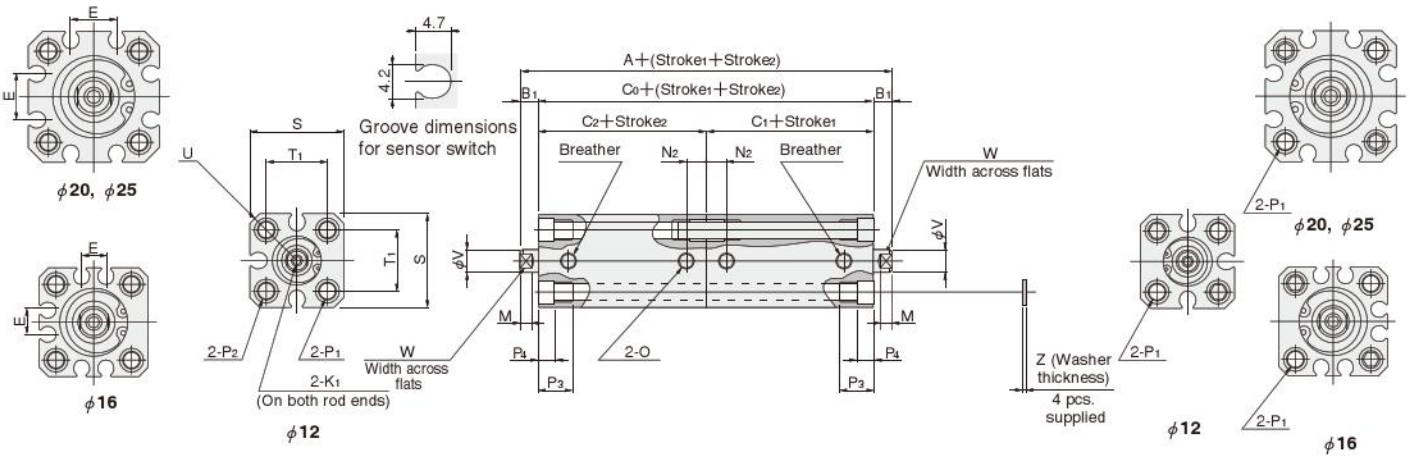

● The drawing is for ϕ 12.

● ϕ32～ϕ50

CSAW Bore size

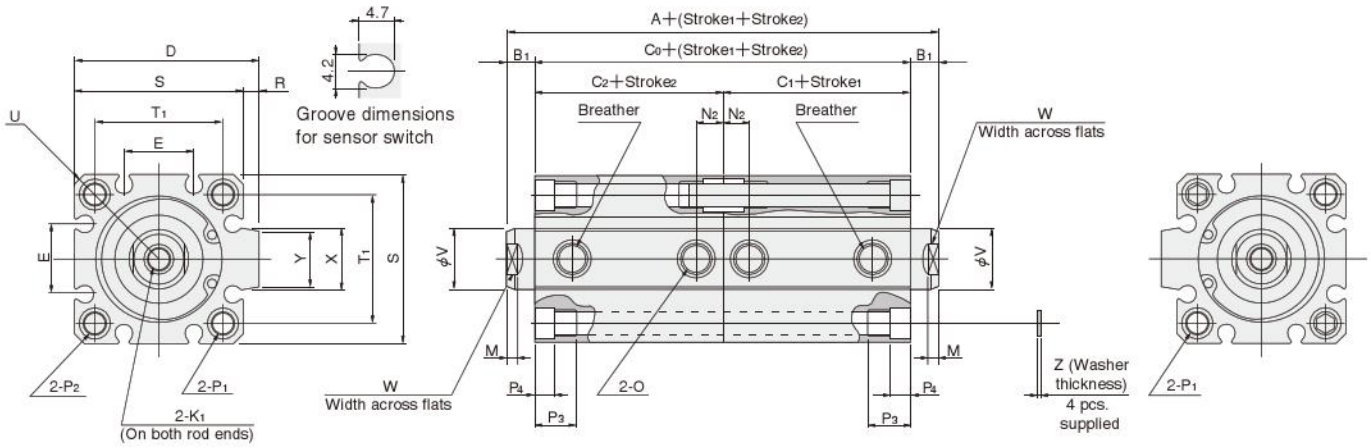

Bore mm [in.]	Code	Standard cylinder (CSAW)										Cylinder with magnet (CSAWS)									
	Stroke1	5～15 (φ50: 10～20)					16～30 (φ50: 21～40)					5～15 (φ50: 10～20)					16～30 (φ50: 21～40)				
		A	B_1	C_0	C_1	C_2	A	B_1	C_0	C_1	C_2	A	B_1	C_0	C_1	C_2	A	B_1	C_0	C_1	C_2
12 [0.472]	D1	54	5	44	22	22	64	5	54	32	22	64	5	54	27	27	74	5	64	37	27
	D2	64		54		32	74		64		32	74		64		37	84		74		37
16 [0.630]	D1	55	5.5	44	22	22	65	5.5	54	32	22	65	5.5	54	27	27	75	5.5	64	37	27
	D2	65		54		32	75		64		32	75		64		37	85		74		37
20 [0.787]	D1	50	5.5	39	19.5	19.5	60	5.5	49	29.5	19.5	70	5.5	59	29.5	29.5	80	5.5	69	39.5	29.5
	D2	60		49		29.5	70		59		29.5	80		69		39.5	90		79		39.5
25 [0.984]	D1	54	6	42	21	21	64	6	52	31	21	74	6	62	31	31	84	6	72	41	31
	D2	64		52		31	74		62		31	84		72		41	94		82		41
32 [1.260]	D1	60	7	46	23	23	75	7	61	38	23	80	7	66	33	33	95	7	81	48	33
	D2	75		61		38	90		76		38	95		81		48	110		96		48
40 [1.575]	D1	66	7	52	26	26	81	7	67	41	26	86	7	72	36	36	101	7	87	51	36
	D2	81		67		41	96		82		41	101		87		51	116		102		51
50 [1.969]	D1	74	9	56	28	28	89	9	71	43	28	94	9	76	38	38	109	9	91	53	38
	D2	89		71		43	104		86		43	109		91		53	124		106		53

Bore mm [in.]	Code	D	E	K_1	M	N_2	O	P_1
12 [0.472]	D1	—	—	M3×0.5 Depth6	3.5	5	M5×0.8	φ4.3 (Thru hole) Counterbore φ6.5 (Both sides) and M5×0.8 (Both sides)
	D2							
16 [0.630]	D1	—	6.2	M4×0.7 Depth8	3.5	5	M5×0.8	φ4.3 (Thru hole) Counterbore φ6.5 (Both sides) and M5×0.8 (Both sides)
	D2							
20 [0.787]	D1	—	12.2	M5×0.8 Depth10	4.5	5	M5×0.8	φ4.3 (Thru hole) Counterbore φ6.5 (Both sides) and M5×0.8 (Both sides)
	D2							
25 [0.984]	D1	—	12.2	M6×1 Depth10	5	5	M5×0.8	φ5.1 (Thru hole) Counterbore φ8 (Both sides) and M6×1 (Both sides)
	D2							
32 [1.260]	D1	48.5	18.2	M8×1.25 Depth12	6	7.5	Rc1/8	φ5.1 (Thru hole) Counterbore φ8 (Both sides) and M6×1 (Both sides)
	D2							
40 [1.575]	D1	56.5	18.2	M8×1.25 Depth12	6	7.5	Rc1/8	φ6.9 (Thru hole) Counterbore φ9.5 (Both sides) and M8×1.25 (Both sides)
	D2							
50 [1.969]	D1	70	24.8	M10×1.5 Depth15	7	9.5	Rc1/4	φ6.9 (Thru hole) Counterbore φ11 (Both sides) and M8×1.25 (Both sides)
	D2							

Bore mm [in.]	Code	P_2	P_3	P_4	R	S	T_1	U	V	W	X	Y	Z	Appropriate through bolt※
12 [0.472]	D1	Counterbore φ6.5 and M5×0.8	9.5	4.5	—	25	16.3	R16	6	5	—	—	1	M3
	D2													
16 [0.630]	D1	Counterbore φ6.5 and M5×0.8	9.5	4.5	—	29	19.8	R19	8	6	—	—	1	M3
	D2													
20 [0.787]	D1	Counterbore φ6.5 and M5×0.8	9.5	4.5	—	34	24	R22	10	8	—	—	1	M3
	D2													
25 [0.984]	D1	Counterbore φ8 and M6×1	11.5	5.5	—	40	28	R25	12	10	—	—	1	M4
	D2													
32 [1.260]	D1	Counterbore φ8 and M6×1	11.5	5.5	4.5	44	34	R29.5	16	14	15	13.6	1	M4
	D2													
40 [1.575]	D1	Counterbore φ9.5 and M8×1.25	15.5	7.5	4.5	52	40	R35	16	14	15	13.6	1.6	M5
	D2													
50 [1.969]	D1	Counterbore φ11 and M8×1.25	16.5	8.5	8	62	48	R41	20	17	21.6	19	1.6	M6
	D2													

Note: D1 is when stroke 2 is 5～15 (φ50: 10～20)mm.
D2 is when stroke 2 is 16～30 (φ50: 21～40)mm.
※ Some types of mounting screws are available (to be ordered separately). See p.209.

Dimensions of Dual Stroke Single Acting Pull Type (mm)

● ϕ12～ϕ25

CAD CTAW Bore size

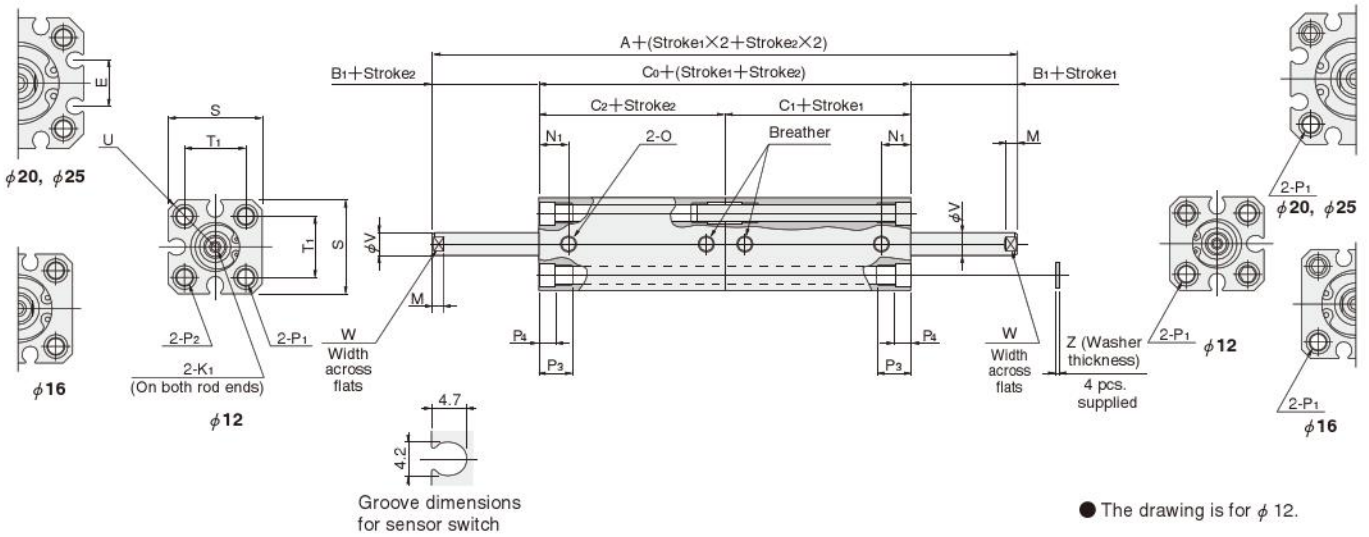

● The drawing is for ϕ 12.

● ϕ32～ϕ50

CAD CTAW Bore size

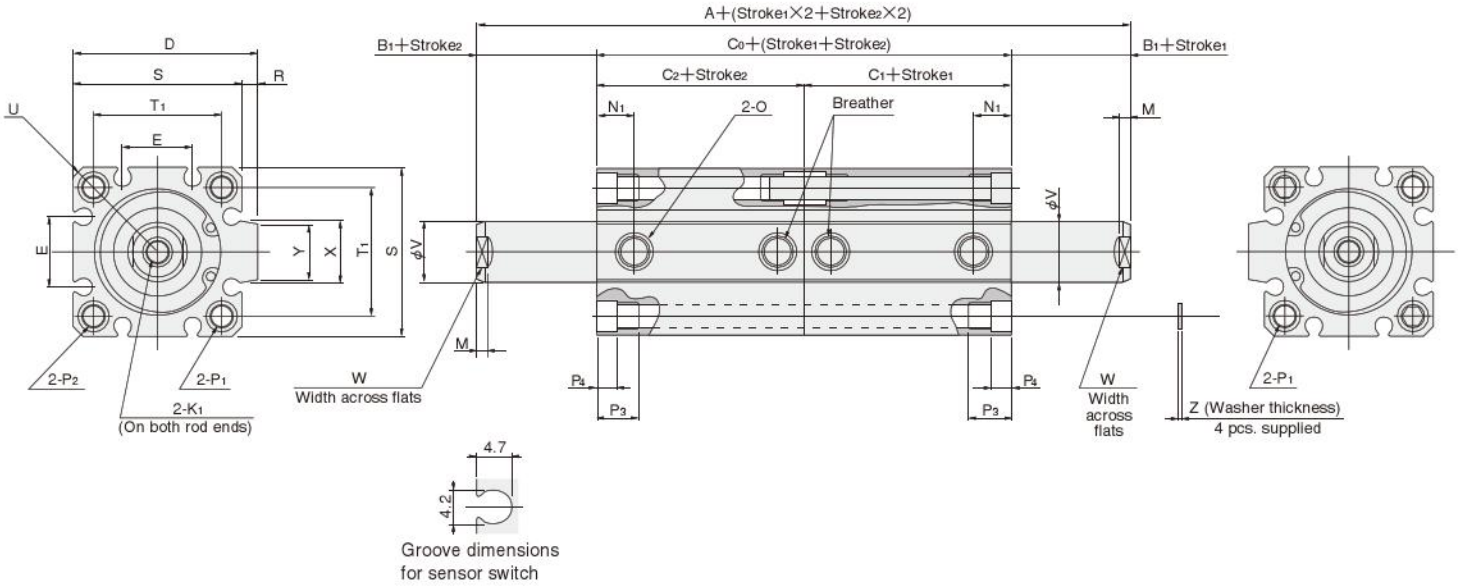

Bore mm [in.]	Code	Standard cylinder (CTAW)										Cylinder with magnet (CTAWS)									
	Stroke 1	5～15 (φ50: 10～20)					16～30 (φ50: 21～40)					5～15 (φ50: 10～20)					16～30 (φ50: 21～40)				
		A	B_1	C_0	C_1	C_2	A	B_1	C_0	C_1	C_2	A	B_1	C_0	C_1	C_2	A	B_1	C_0	C_1	C_2
12 [0.472]	D1	54	5	44	22	22	64	5	54	32	22	64	5	54	27	27	74	5	64	37	27
	D2	64		54		32	74		64		32	74		64		37	84		74		37
16 [0.630]	D1	55	5.5	44	22	22	65	5.5	54	32	22	65	5.5	54	27	27	75	5.5	64	37	27
	D2	65		54		32	75		64		32	75		64		37	85		74		37
20 [0.787]	D1	60	5.5	49	24.5	24.5	70	5.5	59	34.5	24.5	80	5.5	69	34.5	34.5	90	5.5	79	44.5	34.5
	D2	70		59		34.5	80		69		34.5	90		79		44.5	100		89		44.5
25 [0.984]	D1	64	6	52	26	26	74	6	62	36	26	84	6	72	36	36	94	6	82	46	36
	D2	74		62		36	84		72		36	94		82		46	104		92		46
32 [1.260]	D1	70	7	56	28	28	85	7	71	43	28	90	7	76	38	38	105	7	91	53	38
	D2	85		71		43	100		86		43	105		91		53	120		106		53
40 [1.575]	D1	76	7	62	31	31	91	7	77	46	31	96	7	82	41	41	111	7	97	56	41
	D2	91		77		46	106		92		46	111		97		56	126		112		56
50 [1.969]	D1	74	9	56	28	28	89	9	71	43	28	94	9	76	38	38	109	9	91	53	38
	D2	89		71		43	104		86		43	109		91		53	124		106		53

Bore mm [in.]	Code	D	E	K_1	M	N_1	O	P_1
12 [0.472]	D1	—	—	M3×0.5 Depth6	3.5	8	M5×0.8	φ4.3 (Thru hole) Counterbore φ6.5 (Both sides) and M5×0.8 (Both sides)
	D2							
16 [0.630]	D1	—	6.2	M4×0.7 Depth8	3.5	8	M5×0.8	φ4.3 (Thru hole) Counterbore φ6.5 (Both sides) and M5×0.8 (Both sides)
	D2							
20 [0.787]	D1	—	12.2	M5×0.8 Depth10	4.5	9.5	M5×0.8	φ4.3 (Thru hole) Counterbore φ6.5 (Both sides) and M5×0.8 (Both sides)
	D2							
25 [0.984]	D1	—	12.2	M6×1 Depth10	5	10.5	M5×0.8	φ5.1 (Thru hole) Counterbore φ8 (Both sides) and M6×1 (Both sides)
	D2							
32 [1.260]	D1	48.5	18.2	M8×1.25 Depth12	6	9.5	Rc1/8	φ5.1 (Thru hole) Counterbore φ8 (Both sides) and M6×1 (Both sides)
	D2							
40 [1.575]	D1	56.5	18.2	M8×1.25 Depth12	6	10.5	Rc1/8	φ6.9 (Thru hole) Counterbore φ9.5 (Both sides) and M8×1.25 (Both sides)
	D2							
50 [1.969]	D1	70	24.8	M10×1.5 Depth15	7	11	Rc1/4	φ6.9 (Thru hole) Counterbore φ11 (Both sides) and M8×1.25 (Both sides)
	D2							

Bore mm [in.]	Code	P_2	P_3	P_4	R	S	T_1	U	V	W	X	Y	Z	Appropriate through bolt ※
12 [0.472]	D1	Counterbore φ6.5 and M5×0.8	9.5	4.5	—	25	16.3	R16	6	5	—	—	1	M3
	D2													
16 [0.630]	D1	Counterbore φ6.5 and M5×0.8	9.5	4.5	—	29	19.8	R19	8	6	—	—	1	M3
	D2													
20 [0.787]	D1	Counterbore φ6.5 and M5×0.8	9.5	4.5	—	34	24	R22	10	8	—	—	1	M3
	D2													
25 [0.984]	D1	Counterbore φ8 and M6×1	11.5	5.5	—	40	28	R25	12	10	—	—	1	M4
	D2													
32 [1.260]	D1	Counterbore φ8 and M6×1	11.5	5.5	4.5	44	34	R29.5	16	14	15	13.6	1	M4
	D2													
40 [1.575]	D1	Counterbore φ9.5 and M8×1.25	15.5	7.5	4.5	52	40	R35	16	14	15	13.6	1.6	M5
	D2													
50 [1.969]	D1	Counterbore φ11 and M8×1.25	16.5	8.5	8	62	48	R41	20	17	21.6	19	1.6	M6
	D2													

Note: D1 is when stroke 2 is 5～15 (φ50: 10～20)mm.
D2 is when stroke 2 is 16～30 (φ50: 21～40)mm.
※ Some types of mounting screws are available (to be ordered separately). See p.209.

Dimensions of Male Rod End Thread Specification (mm)

CAD Available in the file of each cylinder body.

● Double acting type, Single acting push type, Single acting pull type

● ϕ12～ϕ25

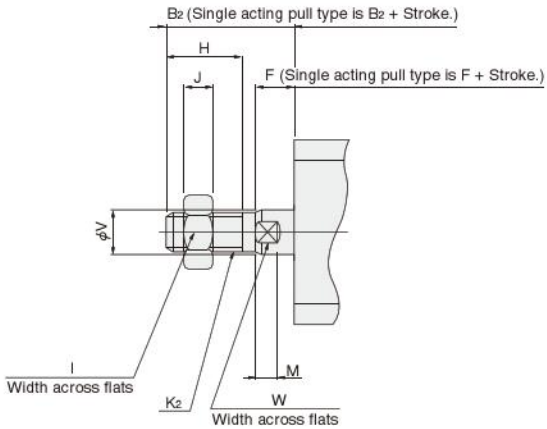

● ϕ32～ϕ100
(Single acting type available up to ϕ 50)

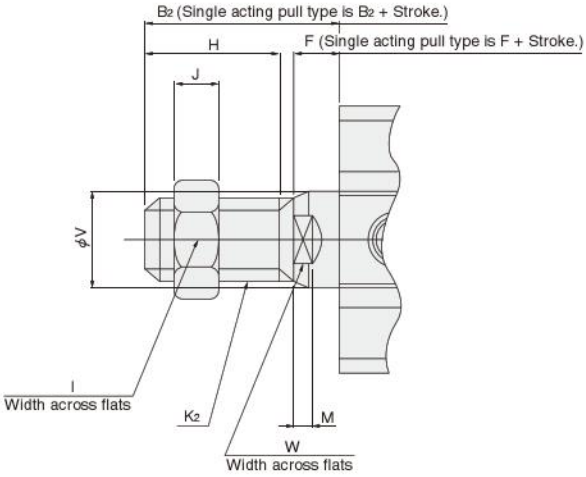

Bore mm [in.] \ Code	B2	F	H	I	J	K2	M	V	W
12 [0.472]	17	5	10	8	4	M5×0.8	3.5	6	5
16 [0.630]	20.5	5.5	13	10	5	M6×1	3.5	8	6
20 [0.787]	22.5	5.5	15	12	5	M8×1	4.5	10	8
25 [0.984]	24	6	15	14	6	M10×1.25	5	12	10
32 [1.260]	35	7	25	19	8	M14×1.5	6	16	14
40 [1.575]	35	7	25	19	8	M14×1.5	6	16	14
50 [1.969]	37	9	25	27	11	M18×1.5	7	20	17
63 [2.480]	37	9	25	27	11	M18×1.5	7	20	17
80 [3.150]	44	11	30	32	13	M22×1.5	9	25	22
100 [3.940]	50	12	35	36	14	M26×1.5	9	32	27

Remark: Cylinder joints and cylinder rod ends are available for mounting with the rod end male thread specification. For details, see p.1568.

Dimensions of Centering Location (mm)

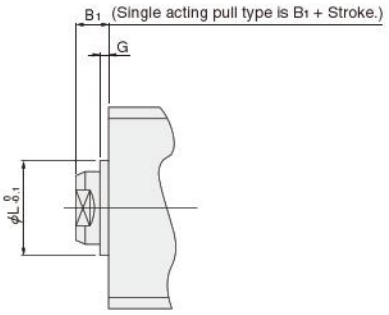

●Not available for bore size ϕ 12.

Bore mm [in.] \ Code	B1	G	L
16 [0.630]	5.5	1.5	9.4
20 [0.787]	5.5	1.5	12
25 [0.984]	6	2	15
32 [1.260]	7	2	21
40 [1.575]	7	2	29
50 [1.969]	9	2	38
63 [2.480]	9	2	40
80 [3.150]	11	2	45
100 [3.940]	12	2	55

JIG CYLINDERS C SERIES
LATERAL LOAD RESISTANT CYLINDERS

Double Acting Type

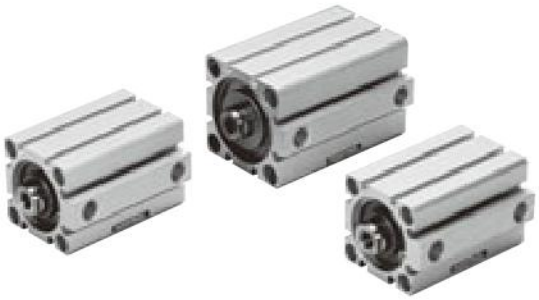

Symbol

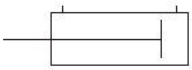

Specifications

Item / Bore size mm [in.]	12 [0.472]	16 [0.630]	20 [0.787]	25 [0.984]	32 [1.260]	40 [1.575]	50 [1.969]	63 [2.480]	80 [3.150]	100 [3.940]
Operation type	Double acting type									
Media	Air									
Operating pressure range MPa [psi.]	0.15～1.0 [22～145]						0.1～1.0 [15～145]			
Proof pressure MPa [psi.]	1.5 [218]									
Operating temperature range °C [°F]	0～60 [32～140]									
Operating speed range mm/s [in./sec.]	30～500 [1.2～19.7]						30～300 [1.2～11.8]			
Cushion	Rubber bumper (Standard equipment)									
Lubrication	Not required (If lubrication is required, use Turbine Oil Class 1 [**ISO VG32**] or equivalent.)									
Port size	M5×0.8				Rc1/8		Rc1/4		Rc3/8	

Remark: For Handling Instructions and Precautions, see p.205.

Refer to p.206 of the graph of "Lateral Load" when the Lateral Load Resistant Cylinder is used.

Bore Size and Stroke

For non-standard strokes, see p.206.

mm

Operation type	Bore size	Standard strokes	
		Standard cylinder	Cylinder with magnet
Double acting type	12	5, 10, 15, 20, 25, 30	5, 10, 15, 20, 25, 30
	16		
	20	5, 10, 15, 20, 25, 30, 35, 40, 45, 50	5, 10, 15, 20, 25, 30, 35, 40, 45, 50
	25		
	32	5, 10, 15, 20, 25, 30, 35, 40, 45, 50, 75, 100	5, 10, 15, 20, 25, 30, 35, 40, 45, 50, 75, 100
	40		
	50	10, 15, 20, 25, 30, 35, 40, 45, 50, 75, 100	10, 15, 20, 25, 30, 35, 40, 45, 50, 75, 100
	63		
	80		
	100		

Remarks: 1. Stroke tolerance $^{+1}_{0}$ [$^{+0.039in.}_{0}$]
2. In most cases, body cutting is used for the non-standard strokes.
However, body cutting is not used for strokes of less than 5mm for ϕ 12～ϕ 40, and strokes of less than 10mm for ϕ 50～ϕ 100. The collar packed is used for these cases.

Order Codes for Lateral Load Resistant Cylinders

Operation type

DA : Double acting type

Rod end specification

Female thread

Male thread

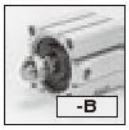

Mounting type

Basic type

Foot mounting type

Flange mounting type Note 4

Clevis mounting type (with pin)

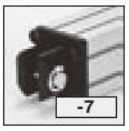

Sensor switch type Note2
(For cylinder with magnet)

Blank:
No sensor switch

-ZE135 : With ZE135
- 2-lead wire Solid state type
- With indicator lamp
- DC10～28V
- Horizontal lead wire

-ZE155 : With ZE155
- 3-lead wire Solid state type
- With indicator lamp
- DC4.5～28V
- Horizontal lead wire

-ZE235 : With ZE235
- 2-lead wire Solid state type
- With indicator lamp
- DC10～28V
- Vertical lead wire

-ZE255 : With ZE255
- 3-lead wire Solid state type
- With indicator lamp
- DC4.5～28V
- Vertical lead wire

-ZE101 : With ZE101
- 2-lead wire Reed switch type
- Without indicator lamp
- DC5～28V AC85～115V
- Horizontal lead wire

-ZE102 : With ZE102
- 2-lead wire Reed switch type
- With indicator lamp
- DC10～28V AC85～115V
- Horizontal lead wire

-ZE201 : With ZE201
- 2-lead wire Reed switch type
- Without indicator lamp
- DC5～28V AC85～115V
- Vertical lead wire

-ZE202 : With ZE202
- 2-lead wire Reed switch type
- With indicator lamp
- DC10～28V AC85～115V
- Vertical lead wire

Lead wire length

A : 1000mm [39in.]
B : 3000mm [118in.]

Number of sensor switches
(For cylinder with magnet)
Blank:
No sensor switch

1 : With 1 sensor switch
2 : With 2 sensor switches

Cylinder specification

Blank : Standard cylinder Note1 (Non-ion specification)
S : Cylinder with magnet (Non-ion specification)

Centering location Note3

Blank : No centering location
-G : With centering location

Lateral load resistant cylinder Basic type			Bore size × Stroke						
CB	DA	S	×	-B Note5	-G	-1 -3 -7	-ZE135 -ZE155 -ZE235 -ZE255 -ZE101 -ZE102 -ZE201 -ZE202	A B	1 2 ⋮ n

● See table for bore size and stroke.

● Mounting brackets are included at shipping.
● In sizes ϕ 12 and ϕ 16 with foot mounting brackets and strokes of less than 10mm, the foot mounting bracket and sensor switch may interfere with each other, which could prevent 2 sensor switches from being mounted. For details, consult us.

● For the order codes of sensor switches only, see p.199.

Notes: 1. In the standard cylinder, a magnet for the sensor switch is not built-in.
2. For details of sensor switches, see p.1544.
3. Not available for the bore size ϕ 12.
4. Cannot be mounted on the bore size ϕ 40 with centering location (**-G**).
5. For information regarding the cylinder joint and cylinder rod end for male thread, see p.1568.

Additional Parts (To be ordered separately)

Foot mounting bracket (p.197)

Flange mounting bracket (p.198)

Clevis mounting bracket (with pin) (p.198)

Mounting screws (p.209)

Inner Construction and Major Parts

● Double acting type (CBDA)

● ϕ12～ϕ40

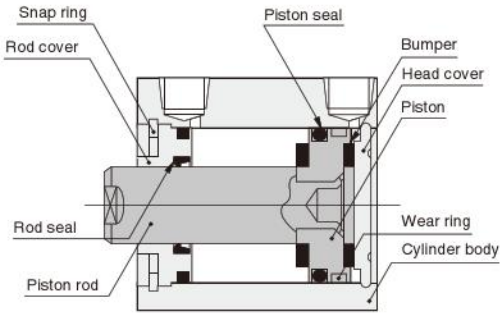

● ϕ50～ϕ100

● Cylinder with magnet

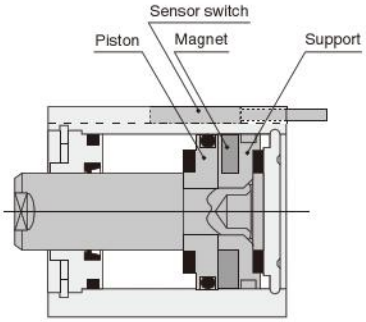

Major Parts and Materials

Parts \ Bore mm	ϕ12	ϕ16	ϕ20	ϕ25	ϕ32	ϕ40	ϕ50	ϕ63	ϕ80	ϕ100
Cylinder body	Aluminum alloy (anodized)									
Piston	Aluminum alloy (special rust prevention treatment)									
Piston rod	Stainless steel (chrome plated)				Steel (chrome plated)					
Seal	Synthetic rubber (NBR)									
Rod cover	Aluminum alloy (special wear-resistant treatment)									
Head cover	Aluminum alloy (anodized)									
Snap ring	Steel (phosphate coating)									
Bumper	Synthetic rubber (NBR; urethane for ϕ 12 only)									
Magnet	Plastic magnet									
Support	Aluminum alloy (special rust prevention treatment)									
Wear ring	Plastic									

Seals

Parts / Bore mm	Rod seal	Piston seal	Tube gasket	
			Rod side	Head side
ϕ12	MYR-6	COP-12	Y090260	None
ϕ16	MYR-8	COP-16	Y090207	None
ϕ20	MYR-10	COP-20	Y090216	None
ϕ25	MYR-12	COP-25	Y090210	None
ϕ32	MYR-16	COP-32	L090084	None
ϕ40	MYR-16	COP-40	L090151	None
ϕ50	MYR-20	COP-50	L090174	L090106
ϕ63	MYR-20	COP-63	L090180	L090107
ϕ80	PNY-25	COP-80	L090171	L090108
ϕ100	PNY-32	COP-100	L090172	L090109

Mass

g [oz.]

Bore size mm [in.]	Zero stroke mass Note 1	Additional mass for each 1mm [0.0394in.] stroke	Additional mass of cylinder with magnet	Mass of mounting bracket			Additional mass of sensor switch Note2	
				Foot bracket	Flange bracket	Clevis bracket	ZE□□□A	ZE□□□B
12 [0.472]	26.17 [0.923]	1.28 [0.0451]	8 [0.28]	50 [1.76]	55 [1.94]	30 [1.06]	15 [0.53]	35 [1.23]
16 [0.630]	36.85 [1.300]	1.62 [0.0571]	11 [0.39]	62 [2.19]	71 [2.50]	40 [1.41]		
20 [0.787]	57.42 [2.025]	2.26 [0.0797]	27 [0.95]	84 [2.96]	101 [3.56]	75 [2.65]		
25 [0.984]	85.94 [3.031]	3.11 [0.110]	39 [1.38]	104 [3.67]	160 [5.64]	100 [3.53]		
32 [1.260]	126.86 [4.475]	4.11 [0.145]	28 [0.99]	126 [4.44]	186 [6.56]	165 [5.82]		
40 [1.575]	195.3 [6.889]	4.77 [0.168]	37 [1.31]	160 [5.64]	335 [11.82]	200 [7.05]		
50 [1.969]	314.69 [11.100]	7.03 [0.248]	57 [2.01]	220 [7.76]	447 [15.77]	315 [11.11]		
63 [2.480]	501.06 [17.674]	8.69 [0.307]	79 [2.79]	300 [10.58]	591 [20.85]	495 [17.46]		
80 [3.150]	951.44 [33.560]	13.06 [0.461]	244 [8.61]	644 [22.72]	1414 [49.88]	1110 [39.15]		
100 [3.940]	1729.88 [61.019]	18.61 [0.656]	344 [12.13]	1172 [41.34]	2606 [91.92]	1490 [52.56]		

Notes: 1. The above table is for the standard strokes.
2. Sensor switch codes A and B show the lead wire lengths.
A: 1000mm [39in.] B: 3000mm [118in.]

Calculation example: For the mass of a cylinder with magnet, bore size of 25mm, stroke of 30mm, and with 2 sensor switches (**ZE135A**)
85.94＋(3.11×30)＋39＋(15×2)＝248.24g [8.756oz.]

Dimensions of Lateral Load Resistant Double Acting Type (mm)

● ϕ12～ϕ25

CBDA Bore size

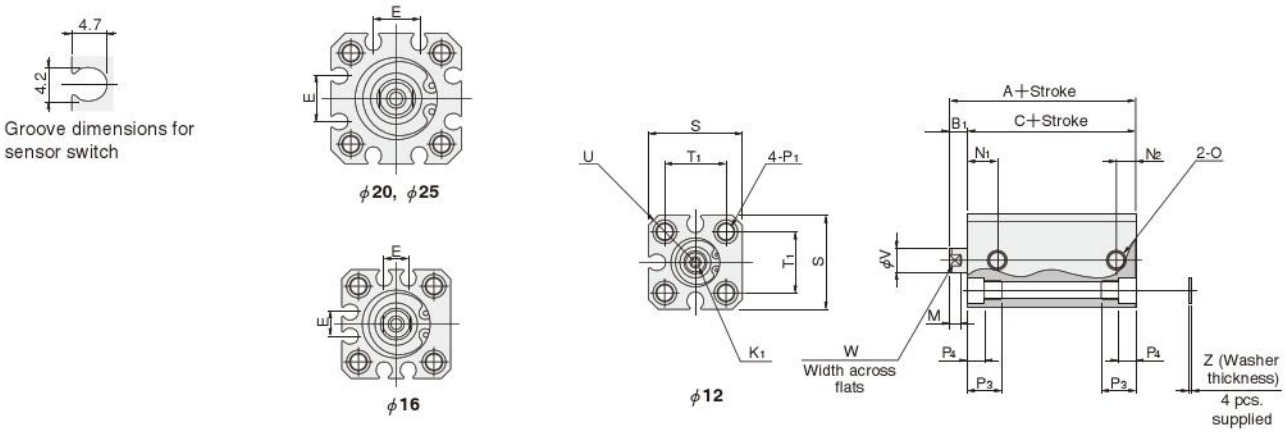

● The drawing is for ϕ 12.

● ϕ32～ϕ100

CBDA Bore size

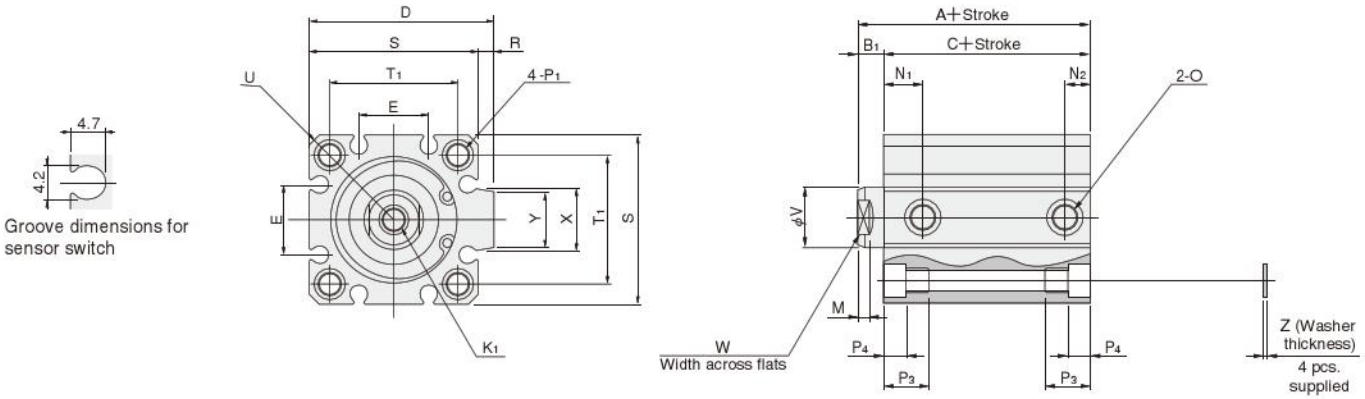

Type / Bore mm [in.] / Code	Standard cylinder (CBDA)			Cylinder with magnet (CBDAS)			D	E	K1	M	N1	N2	O
	A	B1	C	A	B1	C							
12 [0.472]	27	5	22	32	5	27	—	—	M3×0.5 Depth6	3.5	8	5	M5×0.8
16 [0.630]	27.5	5.5	22	32.5	5.5	27	—	6.2	M4×0.7 Depth8	3.5	8	5	M5×0.8
20 [0.787]	30	5.5	24.5	40	5.5	34.5	—	12.2	M5×0.8 Depth10	4.5	9.5	5	M5×0.8
25 [0.984]	32	6	26	42	6	36	—	12.2	M6×1 Depth10	5	10.5	5	M5×0.8
32 [1.260]	35	7	28	40	7	33	48.5	18.2	M8×1.25 Depth12	6	9.5	7.5	Rc1/8
40 [1.575]	38	7	31	43	7	36	56.5	18.2	M8×1.25 Depth12	6	10.5	7.5	Rc1/8
50 [1.969]	42	9	33	47	9	38	70	24.8	M10×1.5 Depth15	7	11	9.5	Rc1/4
63 [2.480]	46	9	37	51	9	42	83	26.8	M10×1.5 Depth15	7	12.5	11	Rc1/4
80 [3.150]	57	11	46	67	11	56	102	32.8	M14×2 Depth20	9	18	12	Rc3/8
100 [3.940]	68	12	56	78	12	66	122	32.8	M18×2.5 Depth20	9	22.5	16.5	Rc3/8

Code / Bore mm [in.]	P1	P3	P4	R	S	T1	U	V	W	X	Y	Z	Appropriate through bolt※
12 [0.472]	ϕ4.3 (Thru hole) C'bore ϕ6.5 (Both sides) and M5×0.8 (Both sides)	9.5	4.5	—	25	16.3	R16	6	5	—	—	1	M3
16 [0.630]	ϕ4.3 (Thru hole) C'bore ϕ6.5 (Both sides) and M5×0.8 (Both sides)	9.5	4.5	—	29	19.8	R19	8	6	—	—	1	M3
20 [0.787]	ϕ4.3 (Thru hole) C'bore ϕ6.5 (Both sides) and M5×0.8 (Both sides)	9.5	4.5	—	34	24	R22	10	8	—	—	1	M3
25 [0.984]	ϕ5.1 (Thru hole) C'bore ϕ8 (Both sides) and M6×1 (Both sides)	11.5	5.5	—	40	28	R25	12	10	—	—	1	M4
32 [1.260]	ϕ5.1 (Thru hole) C'bore ϕ8 (Both sides) and M6×1 (Both sides)	11.5	5.5	4.5	44	34	R29.5	16	14	15	13.6	1	M4
40 [1.575]	ϕ6.9 (Thru hole) C'bore ϕ9.5 (Both sides) and M8×1.25 (Both sides)	15.5	7.5	4.5	52	40	R35	16	14	15	13.6	1.6	M5
50 [1.969]	ϕ6.9 (Thru hole) C'bore ϕ11 (Both sides) and M8×1.25 (Both sides)	16.5	8.5	8	62	48	R41	20	17	21.6	19	1.6	M6
63 [2.480]	ϕ6.9 (Thru hole) C'bore ϕ11 (Both sides) and M8×1.25 (Both sides)	16.5	8.5	8	75	60	R50	20	17	21.6	19	1.6	M6
80 [3.150]	ϕ10.5 (Thru hole) C'bore ϕ14 (Both sides) and M12×1.75 (Both sides)	22.5	10.5	8	94	74	R62	25	22	27.6	25	1.6	M8
100 [3.940]	ϕ12.3 (Thru hole) C'bore ϕ17.5 (Both sides) and M14×2 (Both sides)	27	13	8	114	90	R75	32	27	27.6	25	2	M10

※ Some types of mounting screws are available (to be ordered separately). See p.209.

Dimensions of Male Rod End Thread Specification (mm)

CAD Available in the file of each cylinder body.

● ϕ12～ϕ25

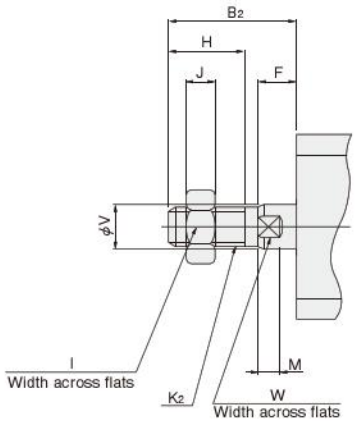

● ϕ32～ϕ100

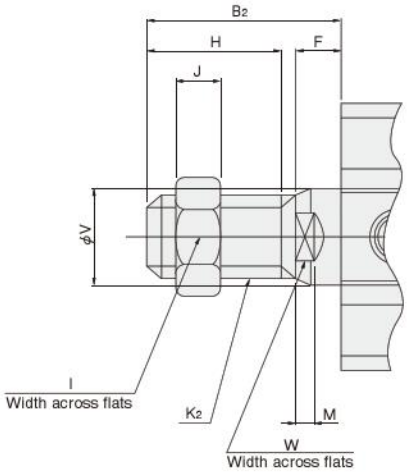

Bore mm [in.] \ Code	B_2	F	H	I	J	K_2	M	V	W
12 [0.472]	17	5	10	8	4	M5×0.8	3.5	6	5
16 [0.630]	20.5	5.5	13	10	5	M6×1	3.5	8	6
20 [0.787]	22.5	5.5	15	12	5	M8×1	4.5	10	8
25 [0.984]	24	6	15	14	6	M10×1.25	5	12	10
32 [1.260]	35	7	25	19	8	M14×1.5	6	16	14
40 [1.575]	35	7	25	19	8	M14×1.5	6	16	14
50 [1.969]	37	9	25	27	11	M18×1.5	7	20	17
63 [2.480]	37	9	25	27	11	M18×1.5	7	20	17
80 [3.150]	44	11	30	32	13	M22×1.5	9	25	22
100 [3.940]	50	12	35	36	14	M26×1.5	9	32	27

Remark: Cylinder joints and cylinder rod ends are available for mounting with the rod end male thread specification. For details, see p.1568.

Dimensions of Centering Location (mm)

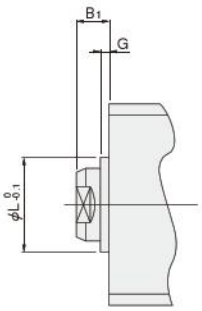

●Not available for bore size ϕ 12.

Bore mm [in.] \ Code	B_1	G	L
16 [0.630]	5.5	1.5	9.4
20 [0.787]	5.5	1.5	12
25 [0.984]	6	2	15
32 [1.260]	7	2	21
40 [1.575]	7	2	29
50 [1.969]	9	2	38
63 [2.480]	9	2	40
80 [3.150]	11	2	45
100 [3.940]	12	2	55

JIG CYLINDERS C SERIES LONG STROKE CYLINDERS

Double Acting Type

Symbol

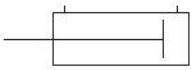

Specifications

Item / Bore size mm [in.]	12 [0.472]	16 [0.630]	20 [0.787]	25 [0.984]	32 [1.260]	40 [1.575]	50 [1.969]	63 [2.480]	80 [3.150]	100 [3.940]
Operation type	Double acting type									
Media	Air									
Operating pressure range MPa [psi.]	0.15～1.0 [22～145]						0.1～1.0 [15～145]			
Proof pressure MPa [psi.]	1.5 [218]									
Operating temperature range °C [°F]	0～60 [32～140]									
Operating speed range mm/s [in./sec.]	30～500 [1.2～19.7]						30～300 [1.2～11.8]			
Cushion	Rubber bumper (Standard equipment)									
Lubrication	Not required (If lubrication is required, use Turbine Oil Class 1 [**ISO VG32**] or equivalent.)									
Port size	M5×0.8				Rc1/8		Rc1/4		Rc3/8	

Remark: For Handling Instructions and Precautions, see p.205.

Bore Size and Stroke

For non-standard strokes, see p.206.

mm

Operation type	Bore size	Standard strokes	
		Standard cylinder	Cylinder with magnet
Double acting type	**12**	35, 50, 75, 100, 125	35, 50, 75, 100, 125
	16		
	20	75, 100, 125, 150, 175, 200	75, 100, 125, 150, 175, 200
	25	75, 100, 125, 150, 175, 200, 225, 250	75, 100, 125, 150, 175, 200, 225, 250
	32	125, 150, 175, 200, 225, 250, 275, 300	125, 150, 175, 200, 225, 250, 275, 300
	40		
	50		
	63		
	80		
	100		

Remarks: 1. Stroke tolerance $^{+1}_{0}$ [$^{+0.039in.}_{0}$]
2. In most cases, body cutting is used for the non-standard strokes.
Body cutting is also used for strokes of 31～34mm for ϕ12 and ϕ16, strokes of 51～74mm for ϕ20 and ϕ25, strokes of 101～124mm for ϕ32 and ϕ100.

Order Codes for Long Stroke Cylinders

Rod end specification

Female thread

Male thread

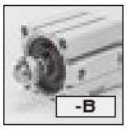

Mounting type

Basic type

Foot mounting type

Flange mounting type Note 4

Clevis mounting type (with pin)

Sensor switch type Note2
(For cylinder with magnet)

Blank:
No sensor switch

-ZE135 : With ZE135
- 2-lead wire Solid state type
- With indicator lamp
- DC10～28V
- Horizontal lead wire

-ZE155 : With ZE155
- 3-lead wire Solid state type
- With indicator lamp
- DC4.5～28V
- Horizontal lead wire

-ZE235 : With ZE235
- 2-lead wire Solid state type
- With indicator lamp
- DC10～28V
- Vertical lead wire

-ZE255 : With ZE255
- 3-lead wire Solid state type
- With indicator lamp
- DC4.5～28V
- Vertical lead wire

-ZE101 : With ZE101
- 2-lead wire Reed switch type
- Without indicator lamp
- DC5～28V AC85～115V
- Horizontal lead wire

-ZE102 : With ZE102
- 2-lead wire Reed switch type
- With indicator lamp
- DC10～28V AC85～115V
- Horizontal lead wire

-ZE201 : With ZE201
- 2-lead wire Reed switch type
- Without indicator lamp
- DC5～28V AC85～115V
- Vertical lead wire

-ZE202 : With ZE202
- 2-lead wire Reed switch type
- With indicator lamp
- DC10～28V AC85～115V
- Vertical lead wire

Lead wire length

A : 1000mm [39in.]
B : 3000mm [118in.]

Number of sensor switches
(For cylinder with magnet)
Blank:
No sensor switch

1 : With 1 sensor switch
2 : With 2 sensor switches

Operation type

DA : Double acting type

Cylinder specification

Blank : Standard cylinder Note1 (Non-ion specification)
S : Cylinder with magnet (Non-ion specification)

Centering location Note3

Blank : No centering location
-G : With centering location

Long stroke cylinder Basic type	Operation type	Cylinder specification	Bore size × Stroke	Centering location		Sensor switch type	Lead wire length	Number of sensor switches
CC	DA	S	×	-B Note5	-G	-1 -3 -7	-ZE135 -ZE155 -ZE235 -ZE255 -ZE101 -ZE102 -ZE201 -ZE202	A B	1 2 ⋮ n

- See table for bore size and stroke.
- Mounting brackets are included at shipping.
- For the order codes of sensor switches only, see p.199.

Notes: 1. In the standard cylinder, a magnet for the sensor switch is not built-in.
2. For details of sensor switches, see p.1544.
3. Not available for the bore size ϕ 12.
4. Cannot be mounted on the bore size ϕ 40 with centering locator (**-G**).
5. For information regarding the cylinder joint and cylinder rod end for male thread, see p.1568.

Additional Parts (To be ordered separately)

Foot mounting bracket (p.197)

Flange mounting bracket (p.198)

Clevis mounting bracket (with pin) (p.198)

Mounting screws (p.209)

Inner Construction and Major Parts

● Double acting type (CCDA)

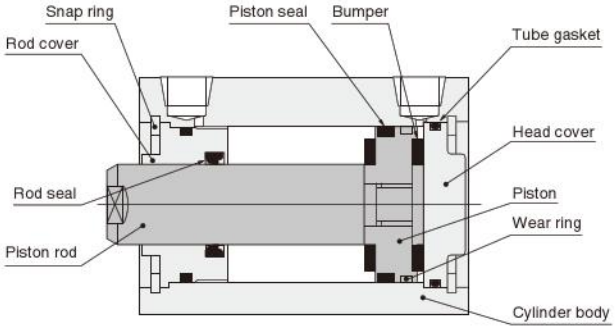

● Cylinder with magnet

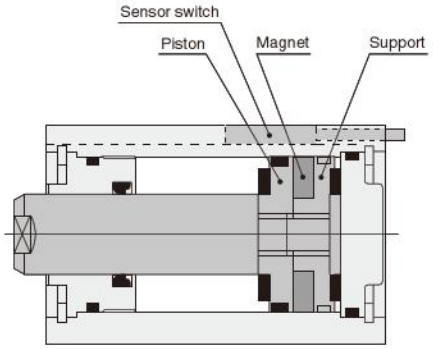

Major Parts and Materials

Parts \ Bore mm	ϕ 12	ϕ 16	ϕ 20	ϕ 25	ϕ 32	ϕ 40	ϕ 50	ϕ 63	ϕ 80	ϕ 100
Cylinder body	Aluminum alloy (anodized)									
Piston	Aluminum alloy (special rust prevention treatment)									
Piston rod	Stainless steel (chrome plated)				Steel (chrome plated)					
Seal	Synthetic rubber (NBR)									
Rod cover	Aluminum alloy (special wear-resistant treatment)									
Head cover	Aluminum alloy (anodized)									
Snap ring	Steel (phosphate coating)									
Bumper	Synthetic rubber (NBR; urethane for ϕ 12 only)									
Magnet	Plastic magnet									
Support	Aluminum alloy (special rust prevention treatment)									
Wear ring	Plastic									

Seals

Parts / Bore mm	Rod seal	Piston seal	Tube gasket	
			Rod side	Head side
ϕ 12	MYR-6	COP-12	Y090260	Y090260
ϕ 16	MYR-8	COP-16	Y090207	Y090207
ϕ 20	MYR-10	COP-20	Y090216	Y090216
ϕ 25	MYR-12	COP-25	Y090210	Y090210
ϕ 32	MYR-16	COP-32	L090084	L090084
ϕ 40	MYR-16	COP-40	L090151	L090151
ϕ 50	MYR-20	COP-50	L090174	L090106
ϕ 63	MYR-20	COP-63	L090180	L090107
ϕ 80	PNY-25	COP-80	L090171	L090108
ϕ 100	PNY-32	COP-100	L090172	L090109

Mass

g [oz.]

Bore size mm [in.]	Zero stroke mass Note 1	Additional mass for each 1mm [0.0394in.] stroke	Additional mass of cylinder with magnet	Mass of mounting bracket			Additional mass of sensor switch Note2	
				Foot bracket	Flange bracket	Clevis bracket	**ZE□□□A**	**ZE□□□B**
12 [0.472]	39.15 [1.381]	1.28 [0.0451]	7 [0.25]	50 [1.76]	55 [1.94]	30 [1.06]	15 [0.53]	35 [1.23]
16 [0.630]	54.75 [1.931]	1.62 [0.0571]	11 [0.39]	62 [2.19]	71 [2.50]	40 [1.41]		
20 [0.787]	84 [2.963]	2.26 [0.0797]	26 [0.92]	84 [2.96]	101 [3.56]	75 [2.65]		
25 [0.984]	121 [4.268]	3.11 [0.110]	38 [1.34]	104 [3.67]	160 [5.64]	100 [3.53]		
32 [1.260]	184.15 [6.496]	4.11 [0.145]	28 [0.99]	126 [4.44]	186 [6.56]	165 [5.82]		
40 [1.575]	281.75 [9.938]	4.77 [0.168]	34 [1.20]	160 [5.64]	335 [11.82]	200 [7.05]		
50 [1.969]	370.23 [13.059]	7.03 [0.248]	56 [1.98]	220 [7.76]	447 [15.77]	315 [11.11]		
63 [2.480]	578.65 [20.411]	8.69 [0.307]	79 [2.79]	300 [10.58]	591 [20.85]	495 [17.46]		
80 [3.150]	1057.6 [37.305]	13.06 [0.461]	250 [8.82]	644 [22.72]	1414 [49.88]	1110 [39.15]		
100 [3.940]	1913.7 [67.503]	18.61 [0.656]	350 [12.35]	1172 [41.34]	2606 [91.92]	1490 [52.56]		

Notes: 1. The above table is for the standard strokes.
2. Sensor switch codes A and B show the lead wire lengths.
A: 1000mm [39in.] B: 3000mm [118in.]

Calculation example: For the mass of a cylinder with magnet, bore size of 25mm, stroke of 150mm, and with 2 sensor switches (**ZE135A**)
121＋(3.11×150)＋38＋(15×2)＝655.5g [23.122oz.]

Dimensions of Long Stroke Cylinder Double Acting Type (mm)

● ϕ12～ϕ25

CCDA Bore size

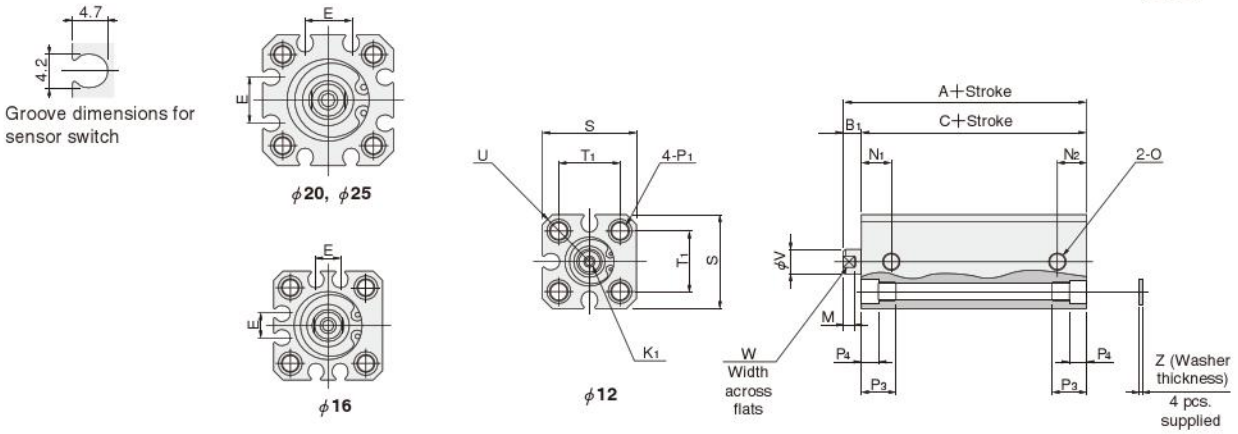

●The drawing is for ϕ 12.

● ϕ32～ϕ100

CCDA Bore size

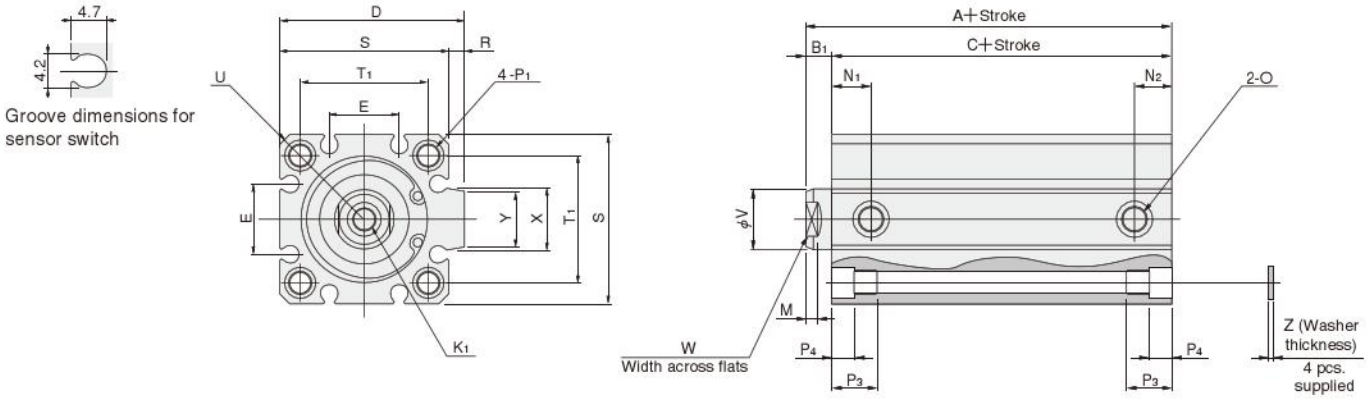

Type / Bore mm [in.] / Code	Standard cylinder (CCDA)			Cylinder with magnet (CCDAS)			D	E	K1	M	N1	N2	O
	A	B1	C	A	B1	C							
12 [0.472]	38	5	33	43	5	38	—	—	M3×0.5 Depth6	3.5	8	8	M5×0.8
16 [0.630]	38.5	5.5	33	43.5	5.5	38	—	6.2	M4×0.7 Depth8	3.5	8	8	M5×0.8
20 [0.787]	41.5	5.5	36	51.5	5.5	46	—	12.2	M5×0.8 Depth10	4.5	9.5	9.5	M5×0.8
25 [0.984]	42.5	6	36.5	52.5	6	46.5	—	12.2	M6×1 Depth10	5	10.5	10.5	M5×0.8
32 [1.260]	47	7	40	52	7	45	48.5	18.2	M8×1.25 Depth12	6	9.5	9.5	Rc1/8
40 [1.575]	50	7	43	55	7	48	56.5	18.2	M8×1.25 Depth12	6	10.5	10.5	Rc1/8
50 [1.969]	47	9	38	52	9	43	70	24.8	M10×1.5 Depth15	7	11	9.5	Rc1/4
63 [2.480]	51	9	42	56	9	47	83	26.8	M10×1.5 Depth15	7	12.5	11	Rc1/4
80 [3.150]	62	11	51	72	11	61	102	32.8	M14×2 Depth20	9	18	12	Rc3/8
100 [3.940]	73	12	61	83	12	71	122	32.8	M18×2.5 Depth20	9	22.5	16.5	Rc3/8

Bore mm [in.] / Code	P1	P3	P4	R	S	T1	U	V	W	X	Y	Z	Appropriate through bolt※
12 [0.472]	ϕ4.3 (Thru hole) Counterbore ϕ6.5 (Both sides) and M5×0.8 (Both sides)	9.5	4.5	—	25	16.3	R16	6	5	—	—	1	M3
16 [0.630]	ϕ4.3 (Thru hole) Counterbore ϕ6.5 (Both sides) and M5×0.8 (Both sides)	9.5	4.5	—	29	19.8	R19	8	6	—	—	1	M3
20 [0.787]	ϕ4.3 (Thru hole) Counterbore ϕ6.5 (Both sides) and M5×0.8 (Both sides)	9.5	4.5	—	34	24	R22	10	8	—	—	1	M3
25 [0.984]	ϕ5.1 (Thru hole) Counterbore ϕ8 (Both sides) and M6×1 (Both sides)	11.5	5.5	—	40	28	R25	12	10	—	—	1	M4
32 [1.260]	ϕ5.1 (Thru hole) Counterbore ϕ8 (Both sides) and M6×1 (Both sides)	11.5	5.5	4.5	44	34	R29.5	16	14	15	13.6	1	M4
40 [1.575]	ϕ6.9 (Thru hole) Counterbore ϕ9.5 (Both sides) and M8×1.25 (Both sides)	15.5	7.5	4.5	52	40	R35	16	14	15	13.6	1.6	M5
50 [1.969]	ϕ6.9 (Thru hole) Counterbore ϕ11 (Both sides) and M8×1.25 (Both sides)	16.5	8.5	8	62	48	R41	20	17	21.6	19	1.6	M6
63 [2.480]	ϕ6.9 (Thru hole) Counterbore ϕ11 (Both sides) and M8×1.25 (Both sides)	16.5	8.5	8	75	60	R50	20	17	21.6	19	1.6	M6
80 [3.150]	ϕ10.5 (Thru hole) Counterbore ϕ14 (Both sides) and M12×1.75 (Both sides)	22.5	10.5	8	94	74	R62	25	22	27.6	25	1.6	M8
100 [3.940]	ϕ12.3 (Thru hole) Counterbore ϕ17.5 (Both sides) and M14×2 (Both sides)	27	13	8	114	90	R75	32	27	27.6	25	2	M10

※ Some types of mounting screws are available (to be ordered separately). See p.209.

Dimensions of Male Rod End Thread Specification (mm)

CAD Available in the file of each cylinder body.

● Double acting type

● ϕ12～ϕ25

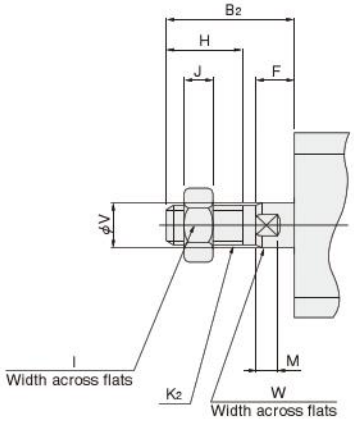

● ϕ32～ϕ100

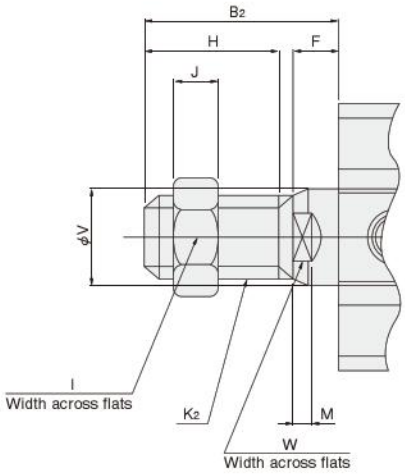

Bore mm [in.] \ Code	B2	F	H	I	J	K2	M	V	W
12 [0.472]	17	5	10	8	4	M5×0.8	3.5	6	5
16 [0.630]	20.5	5.5	13	10	5	M6×1	3.5	8	6
20 [0.787]	22.5	5.5	15	12	5	M8×1	4.5	10	8
25 [0.984]	24	6	15	14	6	M10×1.25	5	12	10
32 [1.260]	35	7	25	19	8	M14×1.5	6	16	14
40 [1.575]	35	7	25	19	8	M14×1.5	6	16	14
50 [1.969]	37	9	25	27	11	M18×1.5	7	20	17
63 [2.480]	37	9	25	27	11	M18×1.5	7	20	17
80 [3.150]	44	11	30	32	13	M22×1.5	9	25	22
100 [3.940]	50	12	35	36	14	M26×1.5	9	32	27

Remark: Cylinder joints and cylinder rod ends are available for mounting with the rod end male thread specification. For details, see p.1568.

Dimensions of Centering Location (mm)

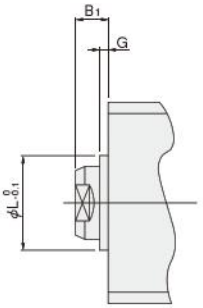

●Not available for bore size ϕ 12.

Bore mm [in.] \ Code	B1	G	L
16 [0.630]	5.5	1.5	9.4
20 [0.787]	5.5	1.5	12
25 [0.984]	6	2	15
32 [1.260]	7	2	21
40 [1.575]	7	2	29
50 [1.969]	9	2	38
63 [2.480]	9	2	40
80 [3.150]	11	2	45
100 [3.940]	12	2	55

JIG CYLINDERS C SERIES END KEEP CYLINDERS

Double Acting Type

Symbols

●Head side end keep

●Rod side end keep

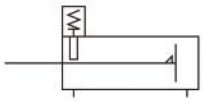

Specifications

Item / Bore size mm [in.]	16 [0.630]	20 [0.787]	25 [0.984]	32 [1.260]	40 [1.575]	50 [1.969]	63 [2.480]
Operation type	Double acting type						
Media	Air						
Operating pressure range MPa [psi.]	0.2～0.9 [29～131]	0.15～0.9 [22～131]				0.1～0.7 [15～102]	
Proof pressure MPa [psi.]	1.5 [218]						
Operating temperature range °C [°F]	0～60 [32～140]						
Operating speed range mm/s [in./sec.]	30～500 [1.2～19.7]					30～300 [1.2～11.8]	
Cushion	Rubber bumper (Standard equipment)						
Lubrication	Not required (If lubrication is required, use Turbine Oil Class 1 [**ISO VG32**] or equivalent.)						
Maximum holding force (at end keep) N [lbf.]	61.7 [13.9]	96.1 [21.6]	151 [33.9]	248.1 [55.8]	387.3 [87.1]	471.6 [106]	534.4 [120]
Backlash (at end keep) mm [in.]	1.4 [0.055] MAX.			1.6 [0.063] MAX.			
Port size	M5×0.8			Rc1/8		Rc1/4	

Remark : For Handling Instructions and Precautions, see p.205.

Bore Size and Stroke

For non-standard strokes, see p.206.

mm

Operation type	Bore size	Standard strokes Standard cylinder, cylinder with magnet
Double acting type	**16**	5, 10, 15, 20, 25, 30, 35, 50, 75, 100, 125
	20	5, 10, 15, 20, 25, 30, 35, 40, 45, 50, 75, 100, 125, 150, 175, 200
	25	5, 10, 15, 20, 25, 30, 35, 40, 45, 50, 75, 100, 125, 150, 175, 200, 225, 250
	32	5, 10, 15, 20, 25, 30, 35, 40, 45, 50, 75, 100, 125, 150, 175, 200, 225, 250, 275, 300
	40	
	50	10, 15, 20, 25, 30, 35, 40, 45, 50, 75, 100, 125, 150, 175, 200, 225, 250, 275, 300
	63	

Remarks 1: Stroke tolerance $^{+1}_{0}$ [$^{+0.039in.}_{0}$]
2: In most cases, body cutting is used for the non-standard strokes.
However, body cutting is not used for strokes of less than 5mm for ϕ16～ϕ40, and strokes of less than 10mm for ϕ50 and ϕ63. The collar packed is used for these cases.
Rod side end keep cylinders cannot be collar packed.

Order Codes for End Keep Cylinders

Rod end specification

Female thread

Male thread

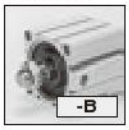

Mounting type

Basic type

Foot mounting type

Flange mounting type Note 3

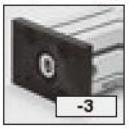

Clevis mounting type (with pin)

End keep position

Head side end keep

Rod side end keep

Sensor switch type Note2
(For cylinder with magnet)

Blank:
No sensor switch

-ZE135 : With ZE135
- 2-lead wire Solid state type
- With indicator lamp
- DC10～28V
- Horizontal lead wire

-ZE155 : With ZE155
- 3-lead wire Solid state type
- With indicator lamp
- DC4.5～28V
- Horizontal lead wire

-ZE235 : With ZE235
- 2-lead wire Solid state type
- With indicator lamp
- DC10～28V
- Vertical lead wire

-ZE255 : With ZE255
- 3-lead wire Solid state type
- With indicator lamp
- DC4.5～28V
- Vertical lead wire

-ZE101 : With ZE101
- 2-lead wire Reed switch type
- Without indicator lamp
- DC5～28V AC85～115V
- Horizontal lead wire

-ZE102 : With ZE102
- 2-lead wire Reed switch type
- With indicator lamp
- DC10～28V AC85～115V
- Horizontal lead wire

-ZE201 : With ZE201
- 2-lead wire Reed switch type
- Without indicator lamp
- DC5～28V AC85～115V
- Vertical lead wire

-ZE202 : With ZE202
- 2-lead wire Reed switch type
- With indicator lamp
- DC10～28V AC85～115V
- Vertical lead wire

Lead wire length

A : 1000mm [39in.]
B : 3000mm [118in.]

Number of sensor switches
(For cylinder with magnet)
Blank:
No sensor switch

1 : With 1 sensor switch
2 : With 2 sensor switches

Operation type

DA : Double acting type

End keep cylinder

Cylinder specification

Blank : Standard cylinder Note1 (Non-ion specification)
S : Cylinder with magnet (Non-ion specification)

Centering location

Blank : No centering location
-G : With centering location

Long stroke cylinder Basic type				Bore size × Stroke							
CC	DA	K	S	×	-B Note4	-G	-HL -RL	-1 -3 -7	-ZE135 -ZE155 -ZE235 -ZE255 -ZE101 -ZE102 -ZE201 -ZE202	A B	1 2 ⋮ n

● See table for bore size and stroke.

● Mounting brackets are included at shipping.

● For the order codes of sensor switches only, see p.199.

Notes: 1. In the standard cylinder, a magnet for the sensor switch is not built-in.
2. For details of sensor switches, see p.1544.
3. Cannot be mounted on the bore size ϕ 40 with centering location (**-G**).
4. For information regarding the cylinder joint and cylinder rod end for male thread, see p.1568.

Additional Parts (To be ordered separately)

Foot mounting bracket (p.197)

Flange mounting bracket (p.198)

Clevis mounting bracket (with pin) (p.198)

Mounting screws (p.209)

Inner Construction and Major Parts

●Head side end keep (CCDAK-HL)

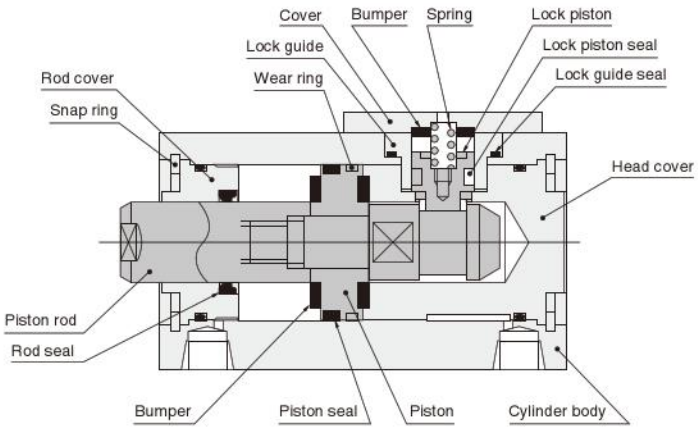

●Cylinder with magnet

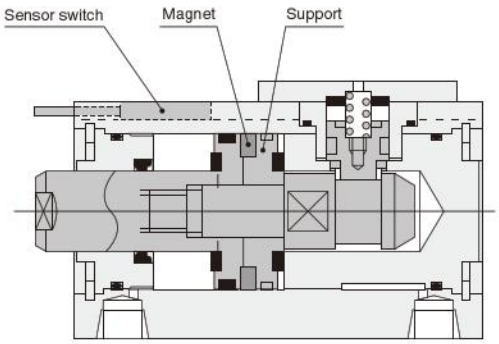

●Rod side end keep (CCDAK-RL)

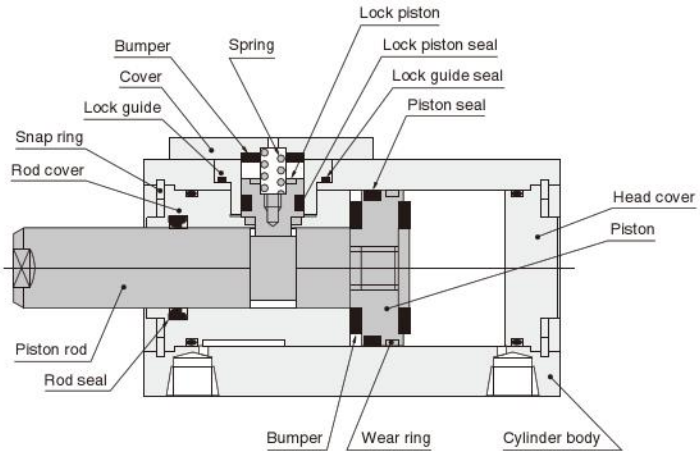

●Cylinder with magnet

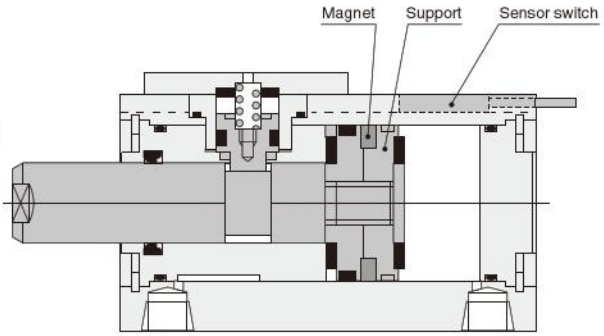

The locking mechanism uses a sequential operation.

Major Parts and Materials

Parts \ Bore mm	ϕ 16	ϕ 20	ϕ 25	ϕ 32	ϕ 40	ϕ 50	ϕ 63
Cylinder body	Aluminum alloy (anodized)						
Piston	Aluminum alloy (special rust prevention treatment)						
Piston rod	Stainless steel (chrome plated)			Steel (chrome plated)			
Seal	Synthetic rubber (NBR)						
Rod cover	Aluminum alloy (special wear-resistant treatment)						
Head cover	Aluminum alloy (special rust prevention treatment)						
Snap ring	Steel (phosphate coating)						
Lock piston	Stainless steel						
Bumper	Synthetic rubber (NBR)						
Magnet	Plastic magnet						
Support	Aluminum alloy (special rust prevention treatment)						
Wear ring	Plastic						
Lock cover	Aluminum alloy (anodized)						
Spring	Piano wire						

Seals

Parts / Bore mm	Rod seal	Piston seal	Tube gasket		Lock piston seal	Lock guide seal
			Rod side	Head side		
ϕ 16	MYR-8	COP-16	Y090207	Y090207	MYN-4	Y090157
ϕ 20	MYR-10	COP-20	Y090216	Y090216	MYN-5	Y090260
ϕ 25	MYR-12	COP-25	Y090210	Y090210	MYN-5	Y090260
ϕ 32	MYR-16	COP-32	L090084	L090084	MYN-10A	L090009
ϕ 40	MYR-16	COP-40	L090151	L090151	MYN-10A	L090009
ϕ 50	MYR-20	COP-50	L090174	L090106	MYN-16	L090084
ϕ 63	MYR-20	COP-63	L090180	L090107	MYN-16	L090084

Mass

●Head side end keep cylinder

g [oz.]

Bore size mm [in.]	Zero stroke mass Note 1	Additional mass for each 1mm [0.0394in.] stroke	Additional mass of cylinder with magnet	Mass of mounting bracket			Additional mass of sensor switch Note2	
				Foot bracket	Flange bracket	Clevis bracket	**ZE□□□A**	**ZE□□□B**
16 [0.630]	109.33 [3.856]	1.62 [0.0571]	9.93 [0.350]	62 [2.19]	71 [2.50]	40 [1.41]	15 [0.53]	35 [1.23]
20 [0.787]	142.49 [5.026]	2.26 [0.0797]	25.71 [0.907]	84 [2.96]	101 [3.56]	75 [2.65]		
25 [0.984]	205.98 [7.266]	3.11 [0.110]	37.47 [1.322]	104 [3.67]	160 [5.64]	100 [3.53]		
32 [1.260]	330.47 [11.657]	4.11 [0.145]	52.43 [1.849]	126 [4.44]	186 [6.56]	165 [5.82]		
40 [1.575]	475.35 [16.767]	4.77 [0.168]	69.15 [2.439]	160 [5.64]	335 [11.82]	200 [7.05]		
50 [1.969]	775.35 [27.349]	7.03 [0.248]	108 [3.81]	220 [7.76]	447 [15.77]	315 [11.11]		
63 [2.480]	1137.3 [40.116]	8.69 [0.307]	159 [5.61]	300 [10.58]	591 [20.85]	495 [17.46]		

●Rod side end keep cylinder

g [oz.]

Bore size mm [in.]	Zero stroke mass Note 1	Additional mass for each 1mm [0.0394in.] stroke	Additional mass of cylinder with magnet	Mass of mounting bracket			Additional mass of sensor switch Note2	
				Foot bracket	Flange bracket	Clevis bracket	**ZE□□□A**	**ZE□□□B**
16 [0.630]	101.33 [3.574]	1.62 [0.0571]	9.93 [0.350]	62 [2.19]	71 [2.50]	40 [1.41]	15 [0.53]	35 [1.23]
20 [0.787]	130.49 [4.603]	2.26 [0.0797]	25.71 [0.907]	84 [2.96]	101 [3.56]	75 [2.65]		
25 [0.984]	185.93 [6.558]	3.11 [0.110]	37.47 [1.322]	104 [3.67]	160 [5.64]	100 [3.53]		
32 [1.260]	310.44 [10.950]	4.11 [0.145]	52.46 [1.850]	126 [4.44]	186 [6.56]	165 [5.82]		
40 [1.575]	445.35 [15.709]	4.77 [0.168]	69.15 [2.439]	160 [5.64]	335 [11.82]	200 [7.05]		
50 [1.969]	755.35 [26.644]	7.03 [0.248]	108 [3.81]	220 [7.76]	447 [15.77]	315 [11.11]		
63 [2.480]	1082.3 [38.176]	8.69 [0.307]	159 [5.61]	300 [10.58]	591 [20.85]	495 [17.46]		

Notes: 1. The above table is for the standard strokes.
2. Sensor switch codes A and B show the lead wire lengths.
A: 1000mm [39in.] B: 3000mm [118in.]

Calculation example: For the mass of a head side end keep cylinder with magnet, bore size of 25mm, stroke of 30mm, and with 2 sensor switches (**ZE135A**)
205.98＋(3.11×30)＋37.47＋(15×2)＝366.75g [12.937oz.]

Dimensions of Head Side End Keep Double Acting Type (mm)

● ϕ16

CCDAK Bore size H

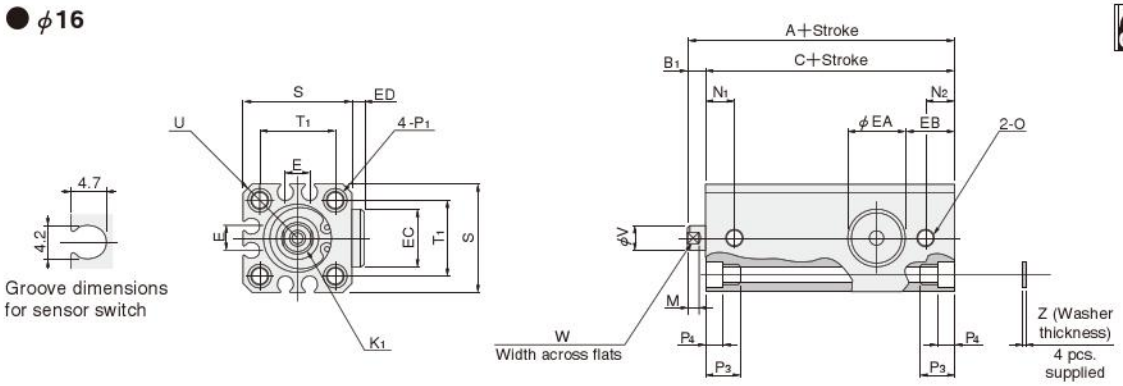

● ϕ20, ϕ25

CCDAK Bore size H

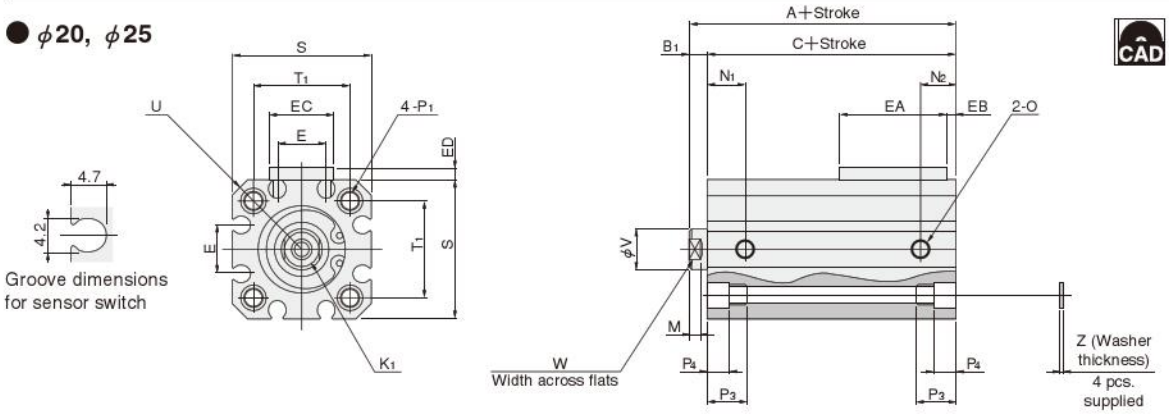

● ϕ32～ϕ63

CCDAK Bore size H

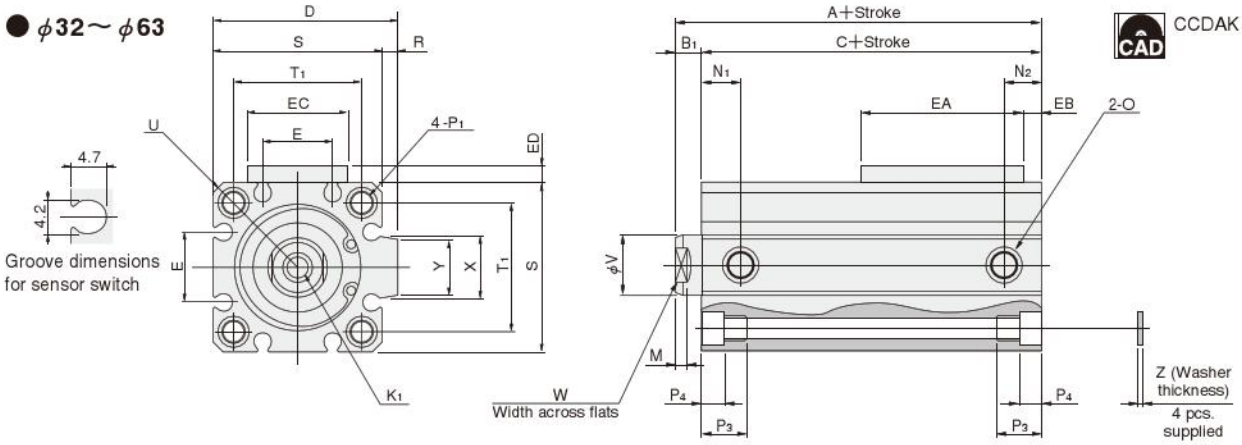

Type / Bore mm [in.] / Code	Standard cylinder (CCDAK-HL)			Cylinder with magnet (CCDAKS-HL)			D	E	K1	M	N1	N2	O
	A	B1	C	A	B1	C							
16 [0.630]	63.5	5.5	58	68.5	5.5	63	—	6.2	M4×0.7 Depth8	3.5	8	8	M5×0.8
20 [0.787]	61.5	5.5	56	71.5	5.5	66	—	12.2	M5×0.8 Depth10	4.5	9.5	9.5	M5×0.8
25 [0.984]	62.5	6	56.5	72.5	6	66.5	—	12.2	M6×1 Depth10	5	10.5	10.5	M5×0.8
32 [1.260]	77	7	70	82	7	75	48.5	18.2	M8×1.25 Depth12	6	9.5	9.5	Rc1/8
40 [1.575]	80	7	73	85	7	78	56.5	18.2	M8×1.25 Depth12	6	10.5	10.5	Rc1/8
50 [1.969]	87	9	78	92	9	83	70	24.8	M10×1.5 Depth15	7	11	9.5	Rc1/4
63 [2.480]	91	9	82	96	9	87	83	26.8	M10×1.5 Depth15	7	12.5	11	Rc1/4

Code / Bore mm [in.]	P1	P3	P4	R	S	T1	U	V	W	X	Y	Z	EA	EB	EC	ED	Appropriate through bolt※
16 [0.630]	ϕ4.3 (Thru hole) Counterbore ϕ6.5 (Both sides) and M5×0.8 (Both sides)	9.5	4.5	—	29	19.8	R19	8	6	—	—	1	16.5	13.75	16.5	3	M3
20 [0.787]	ϕ4.3 (Thru hole) Counterbore ϕ6.5 (Both sides) and M5×0.8 (Both sides)	9.5	4.5	—	34	24	R22	10	8	—	—	1	30	3	16	3.2	M3
25 [0.984]	ϕ5.1 (Thru hole) Counterbore ϕ8 (Both sides) and M6×1 (Both sides)	11.5	5.5	—	40	28	R25	12	10	—	—	1	30	3	16	3.2	M4
32 [1.260]	ϕ5.1 (Thru hole) Counterbore ϕ8 (Both sides) and M6×1 (Both sides)	11.5	5.5	4.5	44	34	R29.5	16	14	15	13.6	1	42	5	26	4	M4
40 [1.575]	ϕ6.9 (Thru hole) Counterbore ϕ9.5 (Both sides) and M8×1.25 (Both sides)	15.5	7.5	4.5	52	40	R35	16	14	15	13.6	1.6	42	6	26	4	M5
50 [1.969]	ϕ6.9 (Thru hole) Counterbore ϕ11 (Both sides) and M8×1.25 (Both sides)	16.5	8.5	8	62	48	R41	20	17	21.6	19	1.6	49	6	35	6	M6
63 [2.480]	ϕ6.9 (Thru hole) Counterbore ϕ11 (Both sides) and M8×1.25 (Both sides)	16.5	8.5	8	75	60	R50	20	17	21.6	19	1.6	49	7.5	35	6	M6

※ Some types of mounting screws are available (to be ordered separately). See p.209.

Dimensions of Rod Side End Keep Double Acting Type (mm)

● ϕ16

CCDAK Bore size R

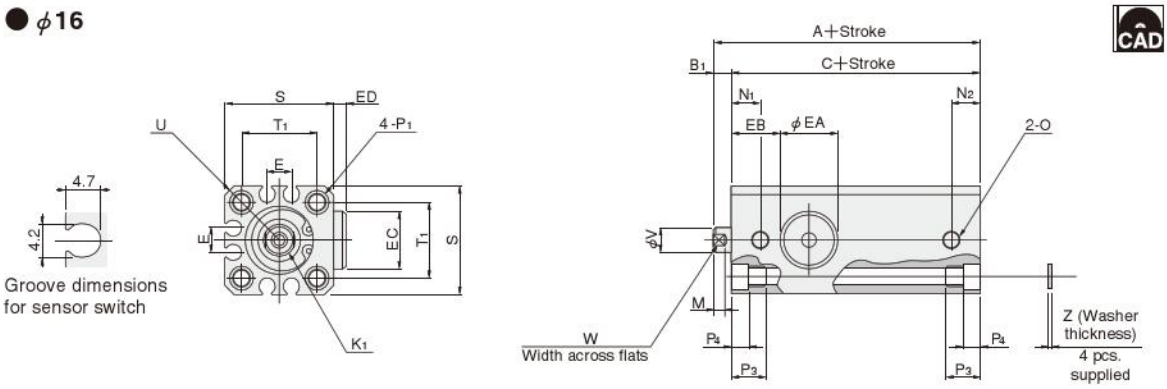

● ϕ20, ϕ25

CCDAK Bore size R

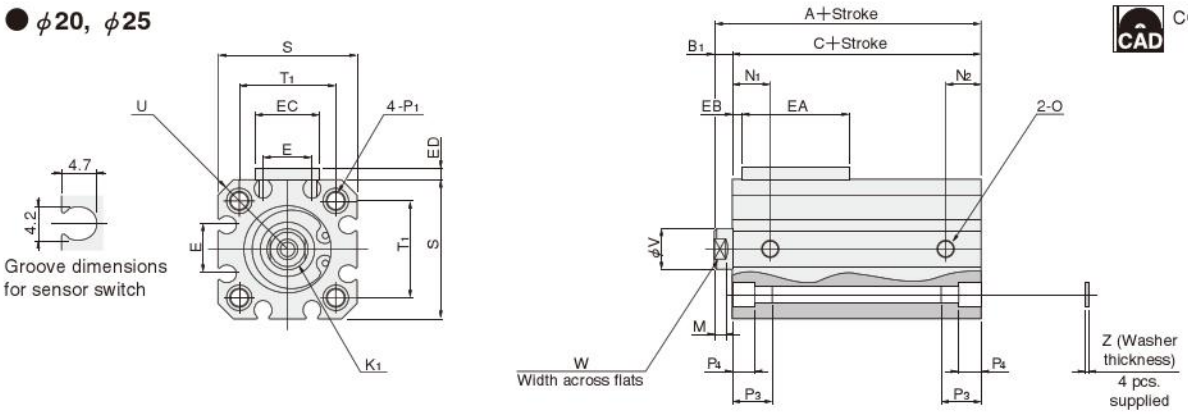

● ϕ32～ϕ63

CCDAK Bore size R

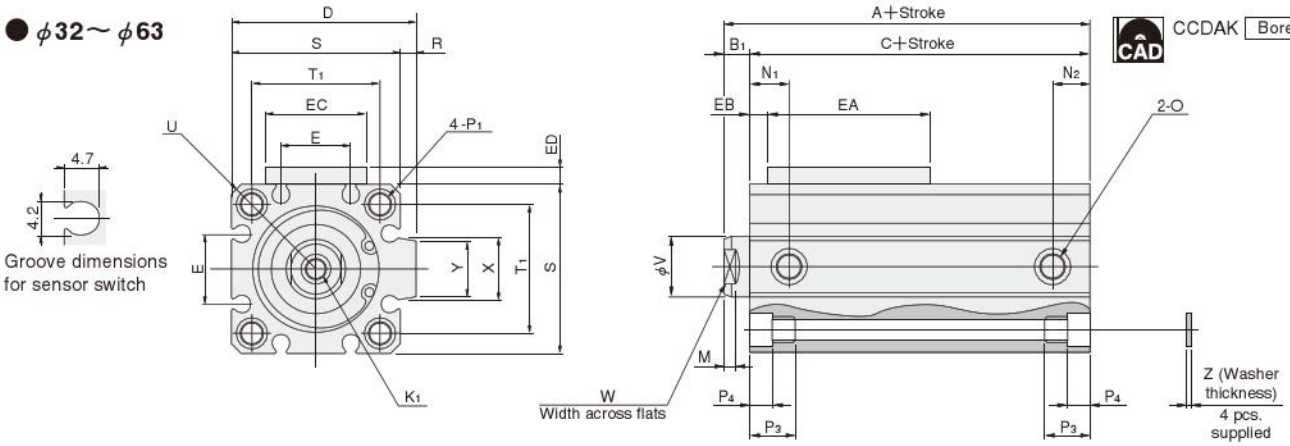

Type / Bore mm [in.] / Code	Standard cylinder (CCDAK-RL)			Cylinder with magnet (CCDAKS-RL)			D	E	K1	M	N1	N2	O
	A	B1	C	A	B1	C							
16 [0.630]	58.5	5.5	53	63.5	5.5	58	—	6.2	M4×0.7 Depth8	3.5	8	8	M5×0.8
20 [0.787]	56.5	5.5	51	66.5	5.5	61	—	12.2	M5×0.8 Depth10	4.5	9.5	9.5	M5×0.8
25 [0.984]	57.5	6	51.5	67.5	6	61.5	—	12.2	M6×1 Depth10	5	10.5	10.5	M5×0.8
32 [1.260]	72	7	65	77	7	70	48.5	18.2	M8×1.25 Depth12	6	9.5	9.5	Rc1/8
40 [1.575]	75	7	68	80	7	73	56.5	18.2	M8×1.25 Depth12	6	10.5	10.5	Rc1/8
50 [1.969]	82	9	73	87	9	78	70	24.8	M10×1.5 Depth15	7	11	9.5	Rc1/4
63 [2.480]	86	9	77	91	9	82	83	26.8	M10×1.5 Depth15	7	12.5	11	Rc1/4

Code / Bore mm [in.]	P1	P3	P4	R	S	T1	U	V	W	X	Y	Z	EA	EB	EC	ED	Appropriate through bolt※
16 [0.630]	φ4.3 (Thru hole) Counterbore φ6.5 (Both sides) and M5×0.8 (Both sides)	9.5	4.5	—	29	19.8	R19	8	6	—	—	1	16.5	13.75	16.5	3	M3
20 [0.787]	φ4.3 (Thru hole) Counterbore φ6.5 (Both sides) and M5×0.8 (Both sides)	9.5	4.5	—	34	24	R22	10	8	—	—	1	30	3	16	3.2	M3
25 [0.984]	φ5.1 (Thru hole) Counterbore φ8 (Both sides) and M6×1 (Both sides)	11.5	5.5	—	40	28	R25	12	10	—	—	1	30	3	16	3.2	M4
32 [1.260]	φ5.1 (Thru hole) Counterbore φ8 (Both sides) and M6×1 (Both sides)	11.5	5.5	4.5	44	34	R29.5	16	14	15	13.6	1	42	5	26	4	M4
40 [1.575]	φ6.9 (Thru hole) Counterbore φ9.5 (Both sides) and M8×1.25 (Both sides)	15.5	7.5	4.5	52	40	R35	16	14	15	13.6	1.6	42	6	26	4	M5
50 [1.969]	φ6.9 (Thru hole) Counterbore φ11 (Both sides) and M8×1.25 (Both sides)	16.5	8.5	8	62	48	R41	20	17	21.6	19	1.6	49	6	35	6	M6
63 [2.480]	φ6.9 (Thru hole) Counterbore φ11 (Both sides) and M8×1.25 (Both sides)	16.5	8.5	8	75	60	R50	20	17	21.6	19	1.6	49	7.5	35	6	M6

※ Some types of mounting screws are available (to be ordered separately). See p.209.

Dimensions of Male Rod End Thread Specification (mm)

CAD Available in the file of each cylinder body.

● Double acting type

● ϕ16～ϕ25

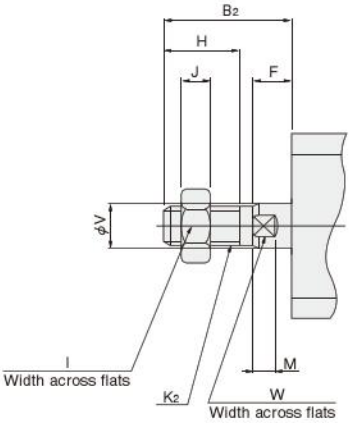

● ϕ32～ϕ63

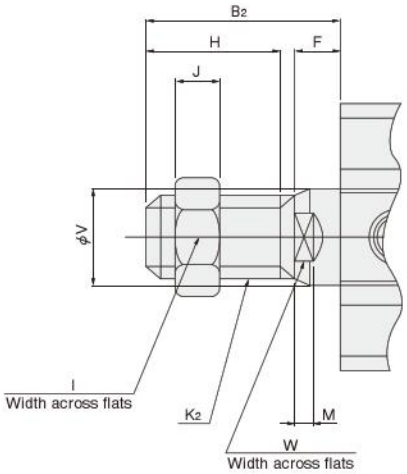

Bore mm [in.] \ Code	B_2	F	H	I	J	K_2	M	V	W
16 [0.630]	20.5	5.5	13	10	5	M6×1	3.5	8	6
20 [0.787]	22.5	5.5	15	12	5	M8×1	4.5	10	8
25 [0.984]	24	6	15	14	6	M10×1.25	5	12	10
32 [1.260]	35	7	25	19	8	M14×1.5	6	16	14
40 [1.575]	35	7	25	19	8	M14×1.5	6	16	14
50 [1.969]	37	9	25	27	11	M18×1.5	7	20	17
63 [2.480]	37	9	25	27	11	M18×1.5	7	20	17

Remark: Cylinder joints and cylinder rod ends are available for mounting with the rod end male thread specification. For details, see p.1568.

Dimensions of Centering Location (mm)

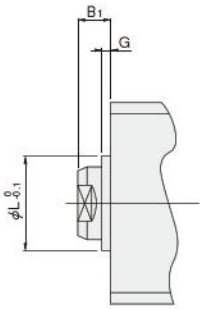

Bore mm [in.] \ Code	B_1	G	L
16 [0.630]	5.5	1.5	9.4
20 [0.787]	5.5	1.5	12
25 [0.984]	6	2	15
32 [1.260]	7	2	21
40 [1.575]	7	2	29
50 [1.969]	9	2	38
63 [2.480]	9	2	40

JIG CYLINDERS C SERIES MOUNTING BRACKETS

Foot Mounting Bracket, Flange Mounting Bracket, Clevis Mounting Bracket

Order Codes of Mounting Bracket Only

□ – **CDA** □

Bore size ϕ **12**～ϕ **100** Note5

Cylinder type
CDA —— For standard, double rod end, tandem, dual stroke, long stroke, lateral load resistant, and end keep cylinder
CDAL —— For square rod cylinder Note4

Mounting bracket
1 —— Foot bracket Note1
● One set consists of 2 brackets.
3 —— Flange bracket Note2
7 —— Clevis bracket Note3

Notes:
1. Cannot be mounted on tandem or dual stroke cylinders. And cannot be mounted on the 5mm strokes of ϕ 16 and ϕ 25, and 10mm strokes of ϕ 50, ϕ 63, and ϕ 80 of the standard cylinders.
2. Cannot be mounted on the head side of the tandem cylinder, cylinder 1 side of the dual stroke cylinder, the rod side of the square rod cylinder with centering location, or the bore size ϕ 40 with centering location (**-G**).
3. Cannot be used with anything other than the long stroke cylinder, the lateral load resistant cylinder, or the end keep cylinder.
4. Applicable to the foot mounting bracket only.
5. Not available for ϕ 6 [0.236in.], ϕ 8 [0.315in.], and ϕ 10 [0.394in.].

Dimensions of Foot Mounting Bracket (mm)

CAD ϕ 12～ϕ 40 : CDA-OP1, ϕ 50～ϕ 100 : CDA-OP2

● ϕ 12～ϕ 16

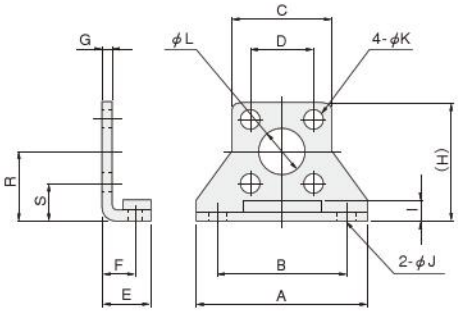

● ϕ 20～ϕ 100

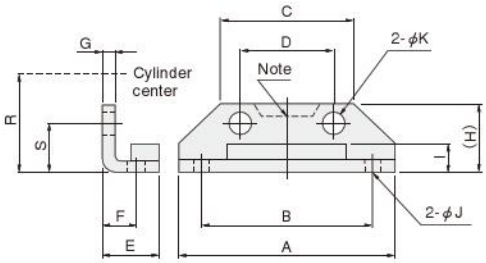

Note: Only for ϕ 50

● Mounting screw

For ϕ 12～ϕ 80

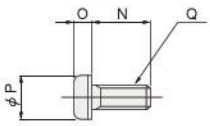

For ϕ 100

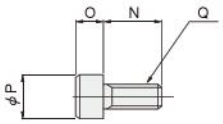

Material: Steel

Bore mm [in.] \ Code	A	B	C	D	E	F	G	H	I	J	K	L	N	O	P	Q	R	S	Mass g [oz.]
12 [0.472]	44	34	25	16.3	12.5	8	2	29.5	4.5	4.5	5.5	11	12	2.7	9.5	M5	17	8.9	50 [1.76]
16 [0.630]	48	38	29	19.8	13	8	2	33.5	4.5	4.5	5.5	11	12	2.7	9.5	M5	19	9.1	62 [2.19]
20 [0.787]	54	44	34	24	15	9.2	3.2	16.5	7	4.5	5.5	—	12 (12, 20)	2.7	9.5	M5	24	12	84 [2.96] (87 [3.07])
25 [0.984]	64	52	40	28	16.5	10.7	3.2	17.5	6	5.5	6.6	—	14 (14, 22)	3.3	10.5	M6	26	12	104 [3.67] (108 [3.81])
32 [1.260]	68	56	44	34	17	11.2	3.2	19	8	5.5	6.6	—	14 (14, 25)	3.3	10.5	M6	30	13	126 [4.44] (131 [4.62])
40 [1.575]	78	64	52	40	18.2	11.2	3.2	19	7	6.6	9	—	20 (20, 30)	4.4	14	M8	33	13	160 [5.64] (168 [5.93])
50 [1.969]	96	78	62	48	22.7	14.7	3.2	22	8	9	9	—	20 (20, 35)	4.4	14	M8	39	15	220 [7.76] (232 [8.18])
63 [2.480]	108	90	75	60	25.2	16.2	3.2	24	8.5	9	9	—	20 (20, 35)	4.4	14	M8	46	16	300 [10.58] (312 [11.01])
80 [3.150]	134	112	94	74	30.5	19.5	4.5	33	12	11	14	—	25	6.6	21	M12	59	22	644 [22.72]
100 [3.940]	160	134	114	90	35.5	23	6	40	14	14	16	—	30	14	21	M14	71	26	1172 [41.34]

Remark: Figures in parentheses ( ) are for square rod cylinders.
Two figures in parentheses ( ), Left side: for head side; Right side: for rod side

Dimensions of Flange Mounting Bracket (mm)

CAD φ12～φ40 : CDA-OP3, φ50～φ100 : CDA-OP4

● φ12～φ16

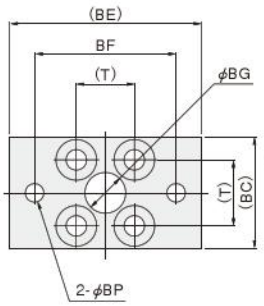

● Mounting screw For φ12～φ80

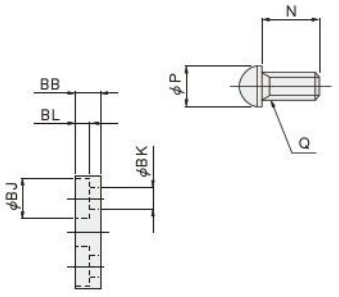

● φ20～φ100

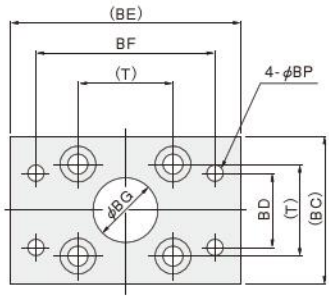

● Mounting screw For φ100

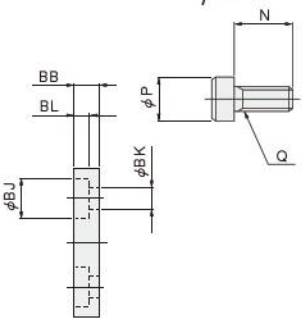

Material: Steel

Bore mm [in.] \ Code	N	P	Q	T	BB	BC	BD	BE	BF	BG	BJ	BK	BL	BP	Mass g [oz.]
12 [0.472]	12	9.5	M5	16.3	6	28	—	50	38	11	10	5.5	3.6	4.5	55 [1.94]
16 [0.630]	12	9.5	M5	19.8	6	32	—	54	42	11	10	5.5	3.6	4.5	71 [2.50]
20 [0.787]	12(18)	9.5	M5	24	6	36	24	58	46	15	10	5.5	3.6	4.5	101 [3.56] (105 [3.70])
25 [0.984]	14(22)	10.5	M6	28	8	42	28	68	54	17	11	6.6	4.3	5.5	160 [5.64] (165 [5.82])
32 [1.260]	14(25)	10.5	M6	34	8	48	34	72	58	22	11	6.6	4.3	5.5	186 [6.56] (196 [6.91])
40 [1.575]	20(30)	14	M8	40	8	58	40	84	68	28	15	9	5.3	6.6	335 [11.82] (351 [12.38])
50 [1.969]	20(35)	14	M8	48	8	66	40	102	82	38	15	9	5.3	9	447 [15.77] (471 [16.61])
63 [2.480]	20(35)	14	M8	60	8	78	50	116	96	40	15	9	5.3	9	591 [20.85] (615 [21.69])
80 [3.150]	25	21	M12	74	12	100	70	142	118	45	22	14	7.3	11	1414 [49.88]
100 [3.940]	30	21	M14	90	20	116	80	170	142	55	23	16	15.2	14	2606 [91.92]

Remark: Figures in parentheses ( ) are for square rod cylinders.

Dimensions of Clevis Mounting Bracket (mm)

CAD φ12～φ40 : CDA-OP5, φ50～φ100 : CDA-OP6

● φ12～φ40

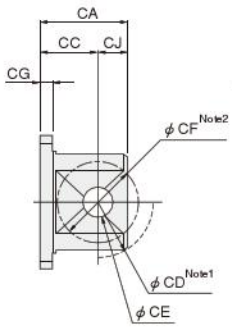

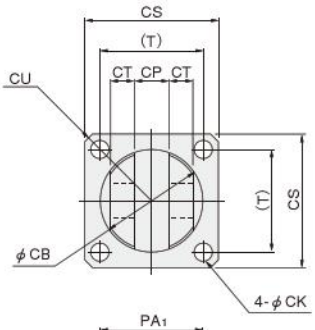

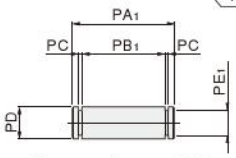

(Two snap rings supplied)

● Mounting screw For φ12～φ100

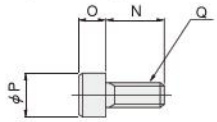

● φ50～φ100

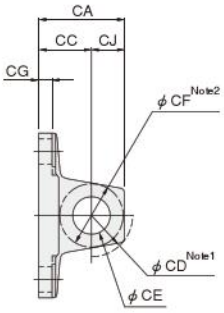

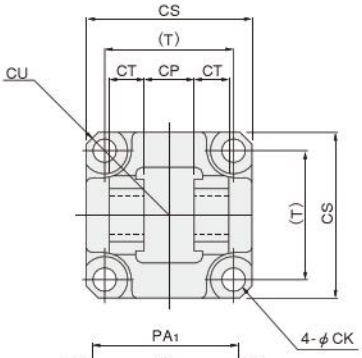

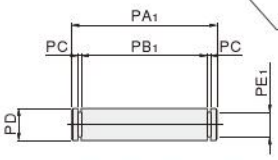

(Two snap rings supplied)

Material: Steel

Bore mm [in.] \ Code	N	O	P	Q	T	CA	CB	CC	CD	CE	CF	CG	CJ	CK	CP	CS	CT	CU	PA1	PB1	PC	PD	PE1	Mass g [oz.]
12 [0.472]	12	5	8.5	M5	16.3	15	12	11	R 7.5	$4^{+0.03}_{0}$	R5	4	4	5.5	$4^{+0.2}_{+0.1}$	25	3	R16	15	10.6	0.7	4 h8	2.5	30 [1.06]
16 [0.630]	12	5	8.5	M5	19.8	17	16	12	R10	$5^{+0.03}_{0}$	R6	4	5	5.5	$5^{+0.2}_{+0.1}$	29	3.5	R19	17	12.6	0.7	5 h8	3	40 [1.41]
20 [0.787]	12	5	8.5	M5	24	25	22	17	R14	$8^{+0.04}_{0}$	R11	4	8	5.5	$8^{+0.4}_{+0.2}$	34	5.2	R22	24.4	19.6	0.9	8 h8	6	75 [2.65]
25 [0.984]	16	6	10	M6	28	25	26	17	R16	$8^{+0.04}_{0}$	R11	4	8	6.6	$8^{+0.4}_{+0.2}$	40	5.2	R25	24.4	19.6	0.9	8 h8	6	100 [3.53]
32 [1.260]	16	6	10	M6	34	29	34	19	R20	$10^{+0.04}_{0}$	R12.5	4	10	6.6	$12^{+0.4}_{+0.2}$	44	8	R29.5	34	29.2	0.9	10 h8	8	165 [5.82]
40 [1.575]	20	8	13	M8	40	29	34	19	R20	$10^{+0.04}_{0}$	R12.5	4	10	9	$12^{+0.4}_{+0.2}$	52	8	R35	34	29.2	0.9	10 h8	8	200 [7.05]
50 [1.969]	22	8	13	M8	48	32	—	19	R17	$14^{+0.08}_{0}$	R14	5	13	9 Counterbore φ17	$20^{+0.6}_{+0.3}$	63	12.5	R41.5	55	47	1.15	$14^{-0.030}_{-0.070}$	13.4	315 [11.11]
63 [2.480]	20	8	13	M8	60	32	—	19	R17	$14^{+0.08}_{0}$	R14	6	13	9 Counterbore φ20	$20^{+0.6}_{+0.3}$	76	15	R50.5	60	52	1.15	$14^{-0.030}_{-0.070}$	13.4	495 [17.46]
80 [3.150]	30	12	18	M12	74	52	—	32	R24	$20^{+0.1}_{0}$	R20	7	20	14 Counterbore φ22	$32^{+0.6}_{+0.3}$	95	16	R62.5	74	66	1.35	$20^{-0.040}_{-0.084}$	19	1110 [39.15]
100 [3.940]	30	14	21	M14	90	52	—	32	R24	$20^{+0.1}_{0}$	R21	7	20	16 Counterbore φ26	$32^{+0.6}_{+0.3}$	115	16	R75.5	74	66	1.35	$20^{-0.040}_{-0.084}$	19	1490 [52.56]

Notes: 1. CD = Swing range of clevis mounting bracket itself.
2. CF = Maximum radius of swing for mating bracket.

Remark: φ12～φ50 are mounted with 2 bolts.

JIG CYLINDERS C SERIES SENSOR SWITCHES

Solid State Type, Reed Switch Type

Order Codes

□ □ — CDAS

A —— 1000mm [39in.]
B —— 3000mm [118in.]

ZE135	Solid state type	with indicator lamp	DC10V～28V	Horizontal lead wire
ZE235	Solid state type	with indicator lamp	DC10V～28V	Vertical lead wire
ZE101	Reed switch type	without indicator lamp	DC5V～28V AC85～115V	Horizontal lead wire
ZE201	Reed switch type	without indicator lamp	DC5V～28V AC85～115V	Vertical lead wire
ZE155	Solid state type	with indicator lamp	DC4.5V～28V	Horizontal lead wire
ZE255	Solid state type	with indicator lamp	DC4.5V～28V	Vertical lead wire
ZE102	Reed switch type	with indicator lamp	DC10V～28V AC85～115V	Horizontal lead wire
ZE202	Reed switch type	with indicator lamp	DC10V～28V AC85～115V	Vertical lead wire

●For details of sensor switches, see p.1544.

Moving Sensor Switch

- Loosening mounting screw allows the sensor switch to be moved along the switch mounting groove on the cylinder body.
- Tighten the mounting screw with a tightening torque of 0.1～0.2N·m [0.9～1.8in·lbf].

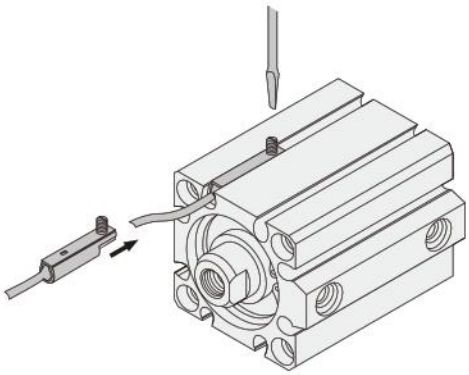

Minimum Cylinder Strokes When Using Sensor Switches

●Solid state type

mm

Bore size	2 pcs. mounting Note		1 pc. mounting
	1-surface mounting	2-surface mounting	
6～12 [0.236～0.472in.]	30	10	5
16～100 [0.630～3.940in.]	10		

Note: Two pieces can be mounted with 5mm stroke.
Take note that overlapping may occur, however.

●Reed switch type

mm

Bore size	2 pcs. mounting		1 pc. mounting
	1-surface mounting	2-surface mounting	
12 [0.472in.]	30	10	10
16～100 [0.630～3.940in.]	10		

Sensor Switch Operating Range, Response Differential, and Maximum Sensing Location

● Operating range : ℓ
The distance the piston travels in one direction, while the switch is in the ON position.

●Response differential : C
The distance between the point where the piston turns the switch ON and the point where the switch is turned OFF as the piston travels in the opposite direction.

●Solid state type

mm [in.]

Item \ Bore	6 [0.236]	8 [0.315]	10 [0.394]	12 [0.472]	16 [0.630]	20 [0.787]	25 [0.984]	32 [1.260]	40 [1.575]	50 [1.969]	63 [2.480]	80 [3.150]	100 [3.940]
Operating range : ℓ	1.8～3.0 [0.071～0.118]	1.8～3.0 [0.071～0.118]	2.0～3.2 [0.079～0.126]	2～4 [0.079～0.157]	2～5 [0.079～0.197]	3.5～7.5 [0.138～0.295]	4～8 [0.157～0.315]	3～7 [0.118～0.276]	3.5～7.5 [0.138～0.295]	3.5～7.5 [0.138～0.295]	4～8.5 [0.157～0.335]	4.5～9.5 [0.177～0.374]	4.5～9.0 [0.177～0.354]
Response differential : C	0.2 [0.008] or less			0.5 [0.02] or less									
Maximum sensing location	6 [0.236]												

Remark: The above table shows reference values.

●Reed switch type

mm [in.]

Item \ Bore	12 [0.472]	16 [0.630]	20 [0.787]	25 [0.984]	32 [1.260]	40 [1.575]	50 [1.969]	63 [2.480]	80 [3.150]	100 [3.940]
Operating range : ℓ	4.5～8.5 [0.177～0.335]	5.5～9.5 [0.217～0.374]	9～13.5 [0.354～0.531]	10～15.5 [0.394～0.610]	8～12 [0.315～0.472]	8.5～14 [0.335～0.551]	9～15 [0.354～0.591]	10～16 [0.394～0.630]	11～16 [0.433～0.630]	11～16.5 [0.433～0.650]
Response differential : C	1.0 [0.039] or less	2.0 [0.079] or less							3.0 [0.118] or less	2.5 [0.098] or less
Maximum sensing location	10 [0.394]									

Remark: The above table shows reference values.

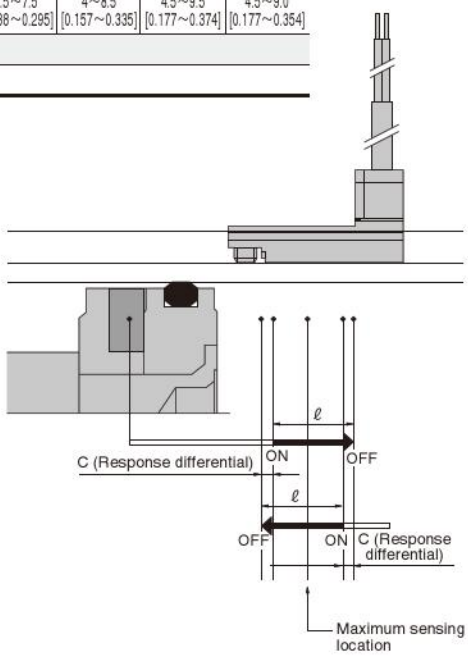

Mounting Sensor Switch

● ϕ6～ϕ12

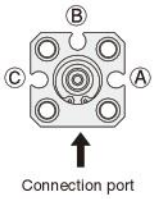

The standard mounting positions at shipping for the end of stroke detection on the rod side is either surface Ⓐ or surface Ⓒ, while the end of stroke detection on the head side is surface Ⓑ.
If mounting sensor switches on the same surface for detection of both ends is required, consult us.
(The sensor switch may sometimes protrude from the cylinder body.)

● ϕ16

Mounting on any of surfaces Ⓐ, Ⓑ, or Ⓒ allows detection of the end of stroke on the rod side and head side.
(The sensor switch may sometimes protrude from the cylinder body.)

● ϕ20～ϕ100

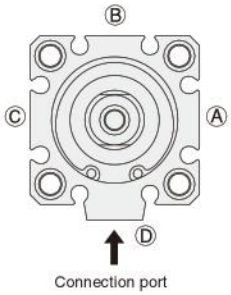

● The drawing is for ϕ 32.

Mounting on any of surfaces Ⓐ, Ⓑ, Ⓒ, or Ⓓ allows detection of the end of stroke on the rod side and head side.
(The sensor switch may sometimes protrude from the cylinder body.)
However, the **ZE2**□□ sensor switches cannot be mounted on the Ⓓ position in ϕ 32, ϕ 40, and ϕ 50.

Mounting Location of End of Stroke Detection Sensor Switch

When the sensor switch is mounted in the position shown in the diagram below (figures in the tables are reference values), the magnet reaches the sensor switch's maximum sensing location at the end of the stroke.

● Standard cylinder, Non-rotating cylinder

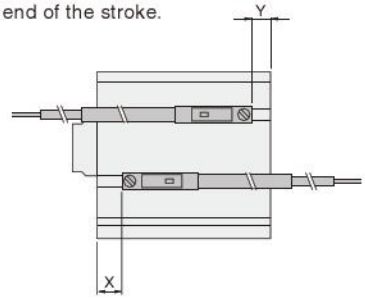

■ Solid state type

● Double acting type

mm [in.]

Code \ Bore		6	8	10	12	16	20	25	32	40	50	63	80	100
X	Standard type	7.2 [0.283]	8 [0.315]	8.3 [0.327]	7 [0.276]	7 [0.276]	11 [0.433]	11 [0.433]	13.5 [0.531]	14.5 [0.571]	12.5 [0.492]	15 [0.591]	20 [0.787]	25 [0.984]
	With bumper (-R)	—	—	—	10 [0.394]	10 [0.394]	15 [0.591]	16 [0.630]	15.5 [0.610]	16.5 [0.650]	15.5 [0.610]	15 [0.591]	20 [0.787]	25 [0.984]
Y	Standard type	1 [0.039]	0.3 [0.012]	1 [0.039]	4 [0.157]	4 [0.157]	7.5 [0.295]	9 [0.354]	8.5 [0.335]	10.5 [0.413]	14.5 [0.571]	16 [0.630]	20 [0.787]	25 [0.984]
	With bumper (-R)	—	—	—	6 [0.236]	6 [0.236]	8.5 [0.335]	9 [0.354]	6.5 [0.256]	8.5 [0.335]	11.5 [0.453]	16 [0.630]	20 [0.787]	25 [0.984]

● Single acting push type

mm [in.]

Code \ Bore	6	8	10	12	16	20	25	32	40	50
X	17.2 [0.677]	18 [0.709]	18.3 [0.720]	15 [0.591]	15 [0.591]	14 [0.551]	14.5 [0.571]	15.5 [0.610]	17.5 [0.689]	17 [0.669]
Y	1 [0.039]	0.3 [0.012]	1 [0.039]	1 [0.039]	1 [0.039]	4.5 [0.177]	5.5 [0.217]	6.5 [0.256]	7.5 [0.295]	10.5 [0.413]

● Single acting pull type

mm [in.]

Code \ Bore	6	8	10	12	16	20	25	32	40	50
X	7.2 [0.283]	8 [0.315]	8.3 [0.327]	7 [0.276]	7 [0.276]	11 [0.433]	11 [0.433]	13.5 [0.531]	14.5 [0.571]	12.5 [0.492]
Y	11 [0.433]	10.3 [0.406]	11 [0.433]	9 [0.354]	9 [0.354]	12.5 [0.492]	14 [0.551]	13.5 [0.531]	15.5 [0.610]	14.5 [0.571]

■ Reed switch type

● Double acting type

mm [in.]

Code \ Bore		12	16	20	25	32	40	50	63	80	100
X	Standard type	2.5 [0.098]	2.5 [0.098]	6.5 [0.256]	6.5 [0.256]	9 [0.354]	10 [0.394]	8 [0.315]	10.5 [0.413]	15.5 [0.610]	20.5 [0.807]
	With bumper (-R)	5.5 [0.217]	5.5 [0.217]	10.5 [0.413]	11.5 [0.453]	11 [0.433]	12 [0.472]	11 [0.433]	10.5 [0.413]	15.5 [0.610]	20.5 [0.807]
Y	Standard type	−0.5 [−0.020]	−0.5 [−0.020]	3 [0.118]	4.5 [0.177]	4 [0.157]	6 [0.236]	10 [0.394]	11.5 [0.453]	15.5 [0.610]	20.5 [0.807]
	With bumper (-R)	1.5 [0.059]	1.5 [0.059]	4 [0.157]	4.5 [0.177]	2 [0.079]	4 [0.157]	7 [0.276]	11.5 [0.453]	15.5 [0.610]	20.5 [0.807]

● Single acting push type

mm [in.]

Code \ Bore	12	16	20	25	32	40	50
X	10.5 [0.413]	10.5 [0.413]	9.5 [0.374]	10 [0.394]	11 [0.433]	13 [0.512]	12.5 [0.492]
Y	−3.5 [−0.138]	−3.5 [−0.138]	0 [0]	1 [0.039]	2 [0.079]	3 [0.118]	6 [0.236]

● Single acting pull type

mm [in.]

Code \ Bore	12	16	20	25	32	40	50
X	2.5 [0.098]	2.5 [0.098]	6.5 [0.256]	6.5 [0.256]	9 [0.354]	10 [0.394]	8 [0.315]
Y	4.5 [0.177]	4.5 [0.177]	8 [0.315]	9.5 [0.374]	9 [0.354]	11 [0.433]	10 [0.394]

● Square rod cylinders with magnet

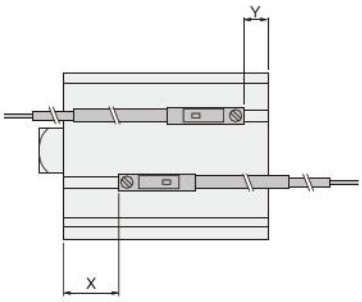

■Solid state type

● Double acting type

mm [in.]

Code \ Bore		20	25	32	40	50	63
X	Standard type	17.5 [0.689]	17.5 [0.689]	22.5 [0.886]	24.5 [0.965]	27.5 [1.083]	30 [1.181]
	With bumper (-R)	21.5 [0.846]	22.5 [0.886]	24.5 [0.965]	26.5 [1.043]	30.5 [1.201]	30 [1.181]
Y	Standard type	10 [0.394]	9 [0.354]	14 [0.551]	14.5 [0.571]	14.5 [0.571]	16 [0.630]
	With bumper (-R)	8.5 [0.335]	9 [0.354]	6.5 [0.256]	8.5 [0.335]	11.5 [0.453]	16 [0.630]

■Reed switch type

● Double acting type

mm [in.]

Code \ Bore		20	25	32	40	50	63
X	Standard type	13 [0.512]	13 [0.512]	18 [0.709]	20 [0.787]	23 [0.906]	25.5 [1.004]
	With bumper (-R)	17 [0.669]	18 [0.709]	20 [0.787]	22 [0.866]	26 [1.024]	25.5 [1.004]
Y	Standard type	5 [0.197]	4.5 [0.177]	4 [0.157]	6 [0.236]	10 [0.394]	11.5 [0.453]
	With bumper (-R)	4 [0.157]	4.5 [0.177]	2 [0.079]	4 [0.157]	7 [0.276]	11.5 [0.453]

● Double rod cylinders with magnet

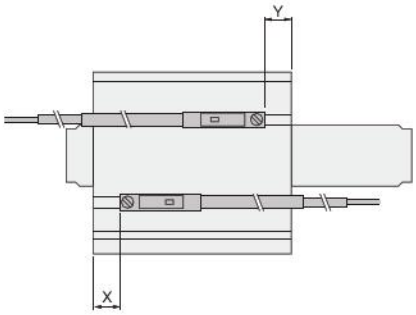

■Solid state type

● Double acting type

mm [in.]

Code \ Bore		6	8	10	12	16	20	25	32	40	50	63	80	100
X	Standard type	7.2 [0.283]	8 [0.315]	8.3 [0.327]	7 [0.276]	7 [0.276]	11 [0.433]	11 [0.433]	13.5 [0.531]	14.5 [0.571]	12.5 [0.492]	15.5 [0.610]	20.5 [0.807]	25 [0.984]
	With bumper (-R)	—	—	—	10 [0.394]	10 [0.394]	15 [0.591]	16 [0.630]	15.5 [0.610]	16.5 [0.650]	14 [0.551]	15 [0.591]	20.5 [0.807]	25 [0.984]
Y	Standard type	5.5 [0.217]	5.8 [0.228]	6 [0.236]	10 [0.394]	10 [0.394]	14 [0.551]	14.5 [0.571]	15.5 [0.610]	17.5 [0.689]	16.5 [0.650]	18 [0.709]	26.5 [1.043]	31.5 [1.240]
	With bumper (-R)	—	—	—	12 [0.472]	12 [0.472]	15 [0.591]	14.5 [0.571]	6.5 [0.256]	15.5 [0.610]	15 [0.591]	18 [0.709]	26.5 [1.043]	31.5 [1.240]

● Single acting type

mm [in.]

Code \ Bore	12	16	20	25	32	40	50
X	15 [0.591]	15 [0.591]	14 [0.551]	14.5 [0.571]	15.5 [0.610]	17.5 [0.689]	16.5 [0.650]
Y	7 [0.276]	7 [0.276]	11 [0.433]	11 [0.433]	13.5 [0.531]	14.5 [0.571]	12.5 [0.492]

■Reed switch type

● Double acting type

mm [in.]

Code \ Bore		12	16	20	25	32	40	50	63	80	100
X	Standard type	2.5 [0.098]	2.5 [0.098]	6.5 [0.256]	6.5 [0.256]	9 [0.354]	10 [0.394]	8 [0.315]	10.5 [0.413]	16 [0.630]	20.5 [0.807]
	With bumper (-R)	5.5 [0.217]	5.5 [0.217]	10.5 [0.413]	11.5 [0.453]	11 [0.433]	12 [0.472]	9.5 [0.374]	10.5 [0.413]	16 [0.630]	20.5 [0.807]
Y	Standard type	5.5 [0.217]	5.5 [0.217]	9.5 [0.374]	10 [0.394]	11 [0.433]	13 [0.512]	12 [0.472]	13.5 [0.531]	22 [0.866]	27 [1.063]
	With bumper (-R)	7.5 [0.295]	7.5 [0.295]	10.5 [0.413]	10 [0.394]	2 [0.079]	11 [0.433]	10.5 [0.413]	13.5 [0.531]	22 [0.866]	27 [1.063]

● Single acting type

mm [in.]

Code \ Bore	12	16	20	25	32	40	50
X	10.5 [0.413]	10.5 [0.413]	9.5 [0.374]	10 [0.394]	11 [0.433]	13 [0.512]	12 [0.472]
Y	2.5 [0.098]	2.5 [0.098]	6.5 [0.256]	6.5 [0.256]	9 [0.354]	10 [0.394]	8 [0.315]

●Tandem cylinders with magnet

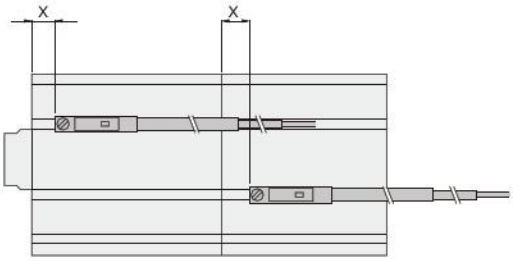

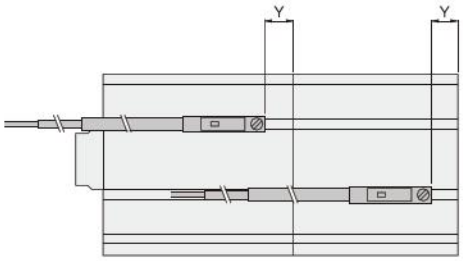

■Solid state type

●Double acting type

mm [in.]

Code	Bore	12	16	20	25	32	40	50	63	80	100
X	Standard type	7 [0.276]	7 [0.276]	11 [0.433]	11 [0.433]	13.5 [0.531]	14.5 [0.571]	12.5 [0.492]	15 [0.591]	20 [0.787]	25 [0.984]
	With bumper (-R)	10 [0.394]	10 [0.394]	15 [0.591]	16 [0.630]	15.5 [0.610]	16.5 [0.650]	15.5 [0.610]	15 [0.591]	20 [0.787]	25 [0.984]
Y	Standard type	4 [0.157]	4 [0.157]	7.5 [0.295]	9 [0.354]	8.5 [0.335]	10.5 [0.413]	14.5 [0.571]	16 [0.630]	20 [0.787]	25 [0.984]
	With bumper (-R)	6 [0.236]	6 [0.236]	8.5 [0.335]	9 [0.354]	6.5 [0.256]	8.5 [0.335]	11.5 [0.453]	16 [0.630]	20 [0.787]	25 [0.984]

●Single acting push type

mm [in.]

Code \ Bore	12	16	20	25	32	40	50
X	15 [0.591]	15 [0.591]	14 [0.551]	14.5 [0.571]	15.5 [0.610]	17.5 [0.689]	16.5 [0.650]
Y	1 [0.039]	1 [0.039]	4.5 [0.177]	5.5 [0.217]	6.5 [0.256]	7.5 [0.295]	10.5 [0.413]

■Reed switch type

●Double acting type

mm [in.]

Code	Bore	12	16	20	25	32	40	50	63	80	100
X	Standard type	2.5 [0.098]	2.5 [0.098]	6.5 [0.256]	6.5 [0.256]	9 [0.354]	10 [0.394]	8 [0.315]	10.5 [0.413]	15.5 [0.610]	20.5 [0.807]
	With bumper (-R)	5.5 [0.217]	5.5 [0.217]	10.5 [0.413]	11.5 [0.453]	11 [0.433]	12 [0.472]	11 [0.433]	10.5 [0.413]	15.5 [0.610]	20.5 [0.807]
Y	Standard type	−0.5 [−0.020]	−0.5 [−0.020]	3 [0.118]	4.5 [0.177]	4 [0.157]	6 [0.236]	10 [0.394]	11.5 [0.453]	15.5 [0.610]	20.5 [0.807]
	With bumper (-R)	1.5 [0.059]	1.5 [0.059]	4 [0.157]	4.5 [0.177]	2 [0.079]	4 [0.157]	7 [0.276]	11.5 [0.453]	15.5 [0.610]	20.5 [0.807]

●Single acting push type

mm [in.]

Code \ Bore	12	16	20	25	32	40	50
X	10.5 [0.413]	10.5 [0.413]	9.5 [0.374]	10 [0.394]	11 [0.433]	13 [0.512]	12 [0.472]
Y	−3.5 [−0.138]	−3.5 [−0.138]	0 [0]	1 [0.039]	2 [0.079]	3 [0.118]	6 [0.236]

● Dual stroke cylinders with magnet

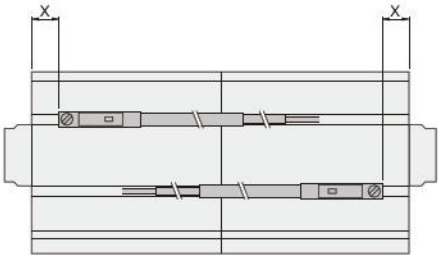

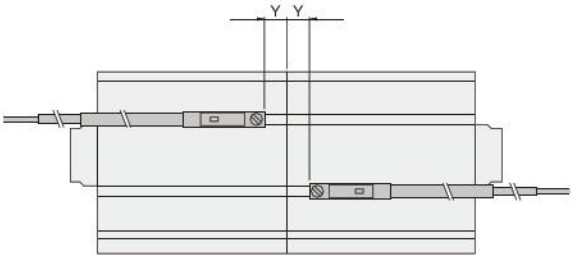

■ Solid state type

● Double acting type

mm [in.]

Code \ Bore		12	16	20	25	32	40	50	63	80	100
X	Standard type	7 [0.276]	7 [0.276]	11 [0.433]	11 [0.433]	13.5 [0.531]	14.5 [0.571]	12.5 [0.492]	15 [0.591]	20 [0.787]	25 [0.984]
	With bumper (-R)	10 [0.394]	10 [0.394]	15 [0.591]	16 [0.630]	15.5 [0.610]	16.5 [0.650]	14 [0.551]	15 [0.591]	20 [0.787]	25 [0.984]
Y	Standard type	4 [0.157]	4 [0.157]	7.5 [0.295]	9 [0.354]	8.5 [0.335]	10.5 [0.413]	14.5 [0.571]	16 [0.630]	20 [0.787]	25 [0.984]
	With bumper (-R)	6 [0.236]	6 [0.236]	8.5 [0.335]	9 [0.354]	6.5 [0.256]	8.5 [0.335]	13.5 [0.531]	16 [0.630]	20 [0.787]	25 [0.984]

● Single acting push type

mm [in.]

Code \ Bore	12	16	20	25	32	40	50
X	15 [0.591]	15 [0.591]	14 [0.551]	14.5 [0.571]	15.5 [0.610]	17.5 [0.689]	16.5 [0.650]
Y	1 [0.039]	1 [0.039]	7.5 [0.295]	5.5 [0.217]	6.5 [0.256]	7.5 [0.295]	10.5 [0.413]

● Single acting pull type

mm [in.]

Code \ Bore	12	16	20	25	32	40	50
X	7 [0.276]	7 [0.276]	11 [0.433]	11 [0.433]	13.5 [0.531]	14.5 [0.571]	12.5 [0.492]
Y	9 [0.354]	9 [0.354]	12.5 [0.492]	14 [0.551]	13.5 [0.531]	15.5 [0.610]	14.5 [0.571]

■ Reed switch type

● Double acting type

mm [in.]

Code \ Bore		12	16	20	25	32	40	50	63	80	100
X	Standard type	2.5 [0.098]	2.5 [0.098]	6.5 [0.256]	6.5 [0.256]	9 [0.354]	10 [0.394]	8 [0.315]	10.5 [0.413]	15.5 [0.610]	20.5 [0.807]
	With bumper (-R)	5.5 [0.217]	5.5 [0.217]	10.5 [0.413]	11.5 [0.453]	11 [0.433]	12 [0.472]	9.5 [0.374]	10.5 [0.413]	15.5 [0.610]	20.5 [0.807]
Y	Standard type	−0.5 [−0.020]	−0.5 [−0.020]	3 [0.118]	4.5 [0.177]	4 [0.157]	6 [0.236]	10 [0.394]	11.5 [0.453]	15.5 [0.610]	20.5 [0.807]
	With bumper (-R)	1.5 [0.059]	1.5 [0.059]	4 [0.157]	4.5 [0.177]	2 [0.079]	4 [0.157]	9 [0.354]	11.5 [0.453]	15.5 [0.610]	20.5 [0.807]

● Single acting push type

mm [in.]

Code \ Bore	12	16	20	25	32	40	50
X	10.5 [0.413]	10.5 [0.413]	9.5 [0.374]	10 [0.394]	11 [0.433]	13 [0.512]	12 [0.472]
Y	−3.5 [−0.138]	−3.5 [−0.138]	3 [0.118]	1 [0.039]	2 [0.079]	3 [0.118]	6 [0.236]

● Single acting pull type

mm [in.]

Code \ Bore	12	16	20	25	32	40	50
X	2.5 [0.098]	2.5 [0.098]	6.5 [0.256]	6.5 [0.256]	9 [0.354]	10 [0.394]	8 [0.315]
Y	4.5 [0.177]	4.5 [0.177]	8 [0.315]	9.5 [0.374]	9 [0.354]	11 [0.433]	10 [0.394]

● Lateral load resistant cylinders with magnet

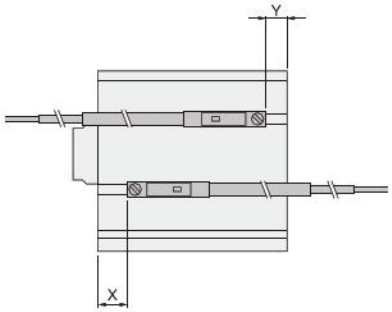

■ Solid state type

● Double acting type

mm [in.]

Code \ Bore	12	16	20	25	32	40	50	63	80	100
X	10 [0.394]	10 [0.394]	15 [0.591]	16 [0.630]	15.5 [0.610]	16.5 [0.650]	15.5 [0.610]	17.5 [0.689]	26.5 [1.043]	31.5 [1.240]
Y	6 [0.236]	6 [0.236]	8.5 [0.335]	9 [0.354]	6.5 [0.256]	8.5 [0.335]	11.5 [0.453]	13.5 [0.531]	18.5 [0.728]	23.5 [0.925]

■ Reed switch type

● Double acting type

mm [in.]

Code \ Bore	12	16	20	25	32	40	50	63	80	100
X	5.5 [0.217]	5.5 [0.217]	10.5 [0.413]	11.5 [0.453]	11 [0.433]	12 [0.472]	11 [0.433]	13 [0.512]	22 [0.866]	27 [1.063]
Y	1.5 [0.059]	1.5 [0.059]	4 [0.157]	4.5 [0.177]	2 [0.079]	4 [0.157]	7 [0.276]	9 [0.354]	14 [0.551]	19 [0.748]

● Long stroke cylinders with magnet

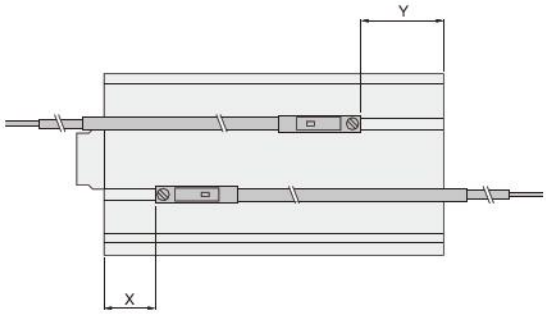

■ Solid state type

● Double acting type

mm [in.]

Code \ Bore	12	16	20	25	32	40	50	63	80	100
X	15 [0.591]	15 [0.591]	20 [0.787]	21 [0.827]	20.5 [0.807]	21.5 [0.846]	20.5 [0.807]	22.5 [0.886]	31.5 [1.240]	36.5 [1.437]
Y	12 [0.472]	12 [0.472]	15 [0.591]	14.5 [0.571]	13.5 [0.531]	15.5 [0.610]	12.5 [0.492]	13.5 [0.531]	18.5 [0.728]	23.5 [0.925]

■ Reed switch type

● Double acting type

mm [in.]

Code \ Bore	12	16	20	25	32	40	50	63	80	100
X	10.5 [0.413]	10.5 [0.413]	15.5 [0.610]	16.5 [0.650]	16 [0.630]	17 [0.669]	16 [0.630]	18 [0.709]	27 [1.063]	32 [1.260]
Y	7.5 [0.295]	7.5 [0.295]	10.5 [0.413]	10 [0.394]	9 [0.354]	11 [0.433]	8 [0.315]	9 [0.354]	14 [0.551]	19 [0.748]

● End keep cylinder with magnet

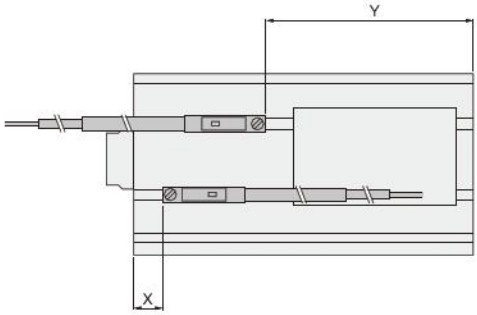

■ Solid state type

● Head side end keep

mm [in.]

Code \ Bore	16	20	25	32	40	50	63
X	15.5 [0.610]	20.5 [0.807]	21.5 [0.846]	20.5 [0.807]	21.5 [0.846]	20.5 [0.807]	22.5 [0.886]
Y	36.5 [1.437]	34.5 [1.358]	34.5 [1.358]	43.5 [1.713]	45.5 [1.791]	51.5 [2.028]	54.5 [2.146]

■ Solid state type

● Rod side end keep

mm [in.]

Code \ Bore	16	20	25	32	40	50	63
X	35.5 [1.398]	35.5 [1.398]	36.5 [1.437]	45.5 [1.791]	46.5 [1.831]	55.5 [2.185]	57.5 [2.264]
Y	11.5 [0.453]	14.5 [0.571]	14.5 [0.571]	13.5 [0.531]	15.5 [0.610]	11.5 [0.453]	13.5 [0.531]

■ Reed switch type

● Head side end keep

mm [in.]

Code \ Bore	16	20	25	32	40	50	63
X	11 [0.433]	16 [0.630]	17 [0.669]	16 [0.630]	17 [0.669]	16 [0.630]	16 [0.630]
Y	32 [1.260]	30 [1.181]	30 [1.181]	39 [1.535]	41 [1.614]	47 [1.850]	50 [1.969]

■ Reed switch type

● Rod side end keep

mm [in.]

Code \ Bore	16	20	25	32	40	50	63
X	31 [1.220]	31 [1.220]	32 [1.260]	41 [1.614]	42 [1.654]	51 [2.008]	53 [2.087]
Y	7 [0.276]	10 [0.394]	10 [0.394]	9 [0.354]	11 [0.433]	7 [0.276]	9 [0.354]

Body mounting

Jig cylinder mounting holes include both through holes with female mounting thread, and dedicated female mounting threads, for a variety of mountings. For details, see the diagrams below.

■Standard cylinders, Double rod cylinders

●Standard cylinders ●Double rod cylinders ●Lateral load resistant cylinders
●Long stroke cylinders ●End keep cylinders

●ϕ6～ϕ12 ●ϕ16 ●ϕ20, ϕ25 ●ϕ32～ϕ100

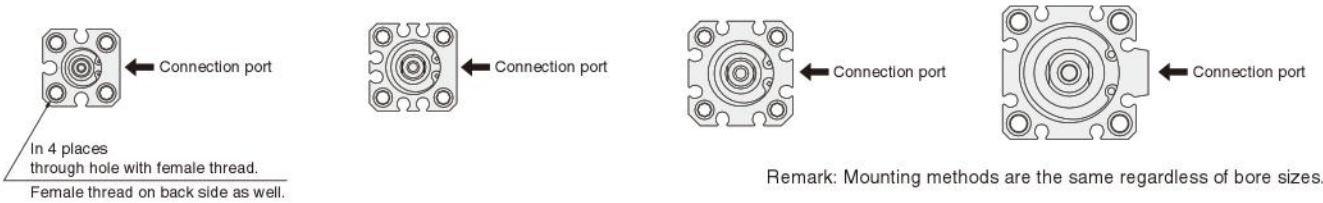

Remark: Mounting methods are the same regardless of bore sizes.

■Non-rotating cylinders

●ϕ6, ϕ8, ϕ10

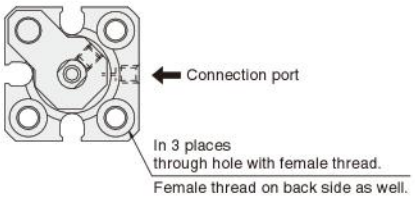

■Square rod cylinders

●ϕ20, ϕ25 ●ϕ32～ϕ63

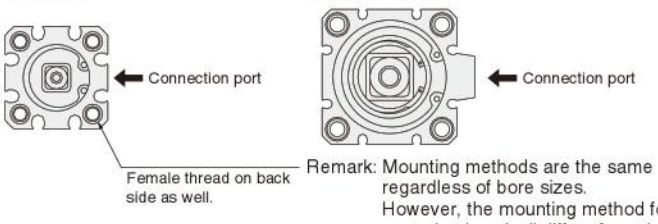

Remark: Mounting methods are the same regardless of bore sizes.
However, the mounting method for "with centering location" differs from the figure above. See p.153.

■Tandem cylinders

●ϕ12 ●ϕ16 ●ϕ20, ϕ25 ●ϕ32～ϕ100

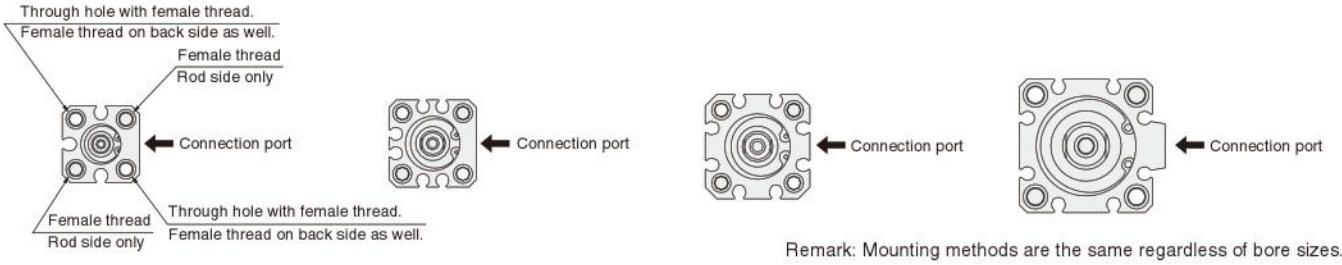

Remark: Mounting methods are the same regardless of bore sizes.

■Dual stroke cylinders

●ϕ12 ●ϕ16 ●ϕ20, ϕ25 ●ϕ32～ϕ100

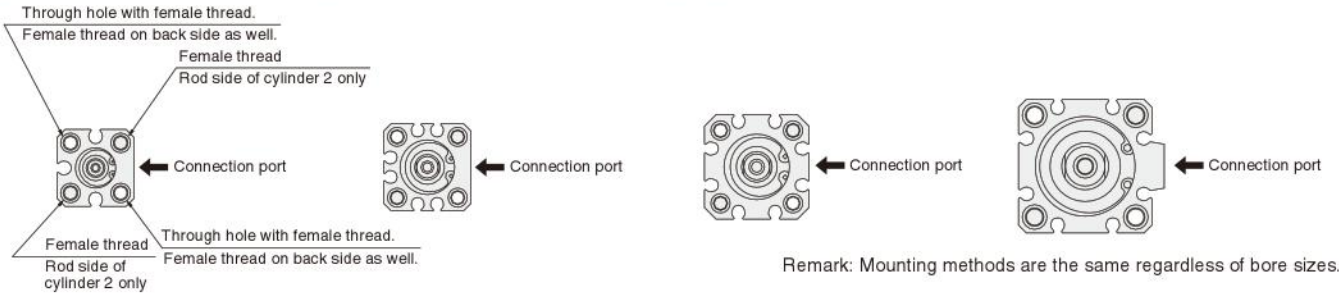

Remark: Mounting methods are the same regardless of bore sizes.

Notes: 1. Avoid applying lateral loads on the piston rod, with the exception of Lateral load resistant cylinders, Long stroke cylinders, and End keep cylinders.
2. When using through holes for mounting, always use the supplied dedicated washers. (except ϕ6, ϕ8, and ϕ10)
3. Mount an external stopper, etc., to prevent the cylinder from being subjected to direct shocks during operation.

● Always use the supplied dedicated washer whenever using a through bolt to directly mount the cylinder body in place.※ Use the bolts shown in the table below to mount in place.
And for bolts used for direct mounting, see p.209.

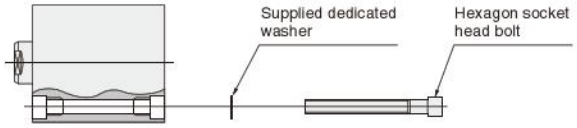

※Washer not available for bore sizes ϕ6, ϕ8, and ϕ10.

Bore size mm [in.]	6 [0.236]	8 [0.315]	10 [0.394]	12 [0.472]	16 [0.630]	20 [0.787]	25 [0.984]	32 [1.260]	40 [1.575]	50 [1.969]	63 [2.480]	80 [3.150]	100 [3.940]
Hexagon socket head bolt nominal size	M3	M3	M3	M3	M3	M3	M4	M4	M5	M6	M6	M8	M10

●Tightening thread of the end of piston rod

Since a tool (thin wrench) has been prepared for holding the piston rod when tightening the rod end thread, consult us.

Order code: L115069

Bracket mounting

- Foot mounting brackets cannot be installed on tandem cylinders and dual stroke cylinders.
- Flange mounting brackets cannot be installed on the head side of tandem cylinders and the stroke 1 side of dual stroke cylinders.
- Clevis mounting brackets cannot be installed on anything except for lateral load resistant cylinders, long stroke cylinders, and end keep cylinders.

Non-standard stroke

- In most cases, body cutting is used for the manufacturing for non-standard strokes.
  However, body cutting is not used for strokes of less than 5mm for ϕ 12 [0.472in.]~ϕ40 [1.575in.], and strokes of less than 10mm for ϕ50 [1.969in.]~ϕ100 [3.940in.]. The collar packed is used for these cases. Moreover, sizes ϕ6 [0.236in.] ~ϕ10 [0.394in.] are collar packed only. For delivery, consult us.
  Rod side end keep cylinders cannot be collar packed.
- Dimensions

1. Additional strokes obtained by body cutting remain classed as non-standard strokes.
2. Additional strokes obtained by collar packed are classed as standard strokes in the longer one.

Lateral Load

- Keep the lateral load on the rod end of the lateral load resistant cylinder, long stroke cylinder, and end keep cylinder, at or below the values shown in the graphs below.
  Note: Avoid applying lateral load on any cylinder types other than the lateral load resistant cylinder, long stroke cylinder, and end keep cylinder.

Lateral load resistant cylinders

Standard type (CBDA)

ϕ 12 [0.472in.]~ ϕ 20 [0.787in.]

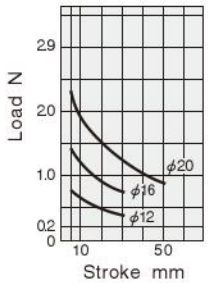

ϕ 25 [0.984in.]~ ϕ 40 [1.575in.]

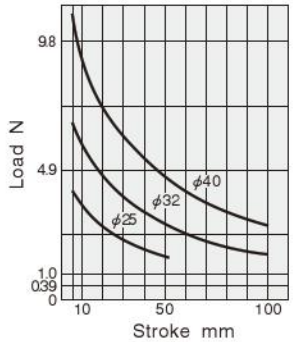

ϕ 50 [1.969in.]~ ϕ 100 [3.940in.]

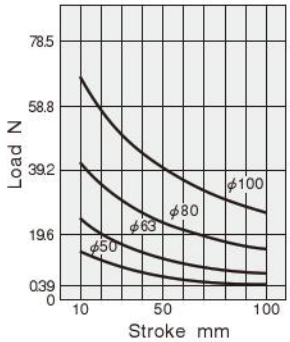

1N = 0.2248lbf.
1mm = 0.0394in.

Cylinder with magnet (CBDAS)

ϕ 12 [0.472in.]~ ϕ 20 [0.787in.]

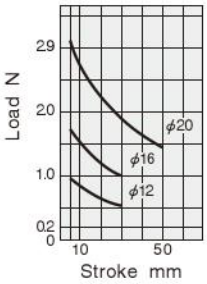

ϕ 25 [0.984in.]~ ϕ 50 [1.969in.]

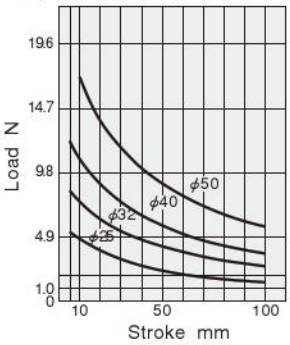

ϕ 63 [2.480in.]~ ϕ 100 [3.940in.]

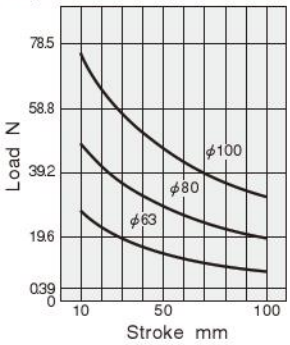

1N = 0.2248lbf.
1mm = 0.0394in.

Long stroke cylinders, End keep cylinders

Standard type (CCDA,CCDAK)

ϕ 12 [0.472in.]~ ϕ 20 [0.787in.]

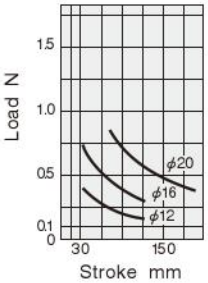

ϕ 25 [0.984in.]~ ϕ 50 [1.969in.]

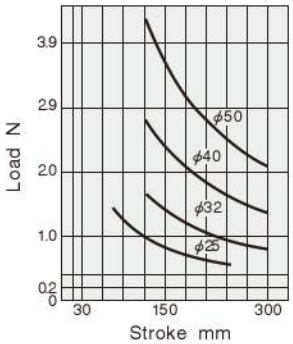

ϕ 63 [2.480in.]~ ϕ 100 [3.940in.]

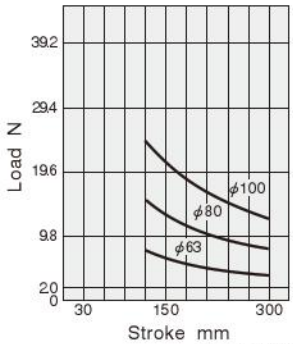

1N = 0.2248lbf.
1mm = 0.0394in.

Cylinder with magnet (CCDAS, CCDAKS)

ϕ 12 [0.472in.]~ ϕ 20 [0.787in.]

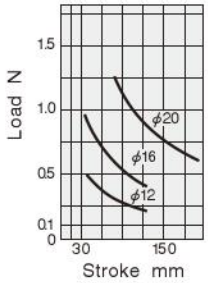

ϕ 25 [0.984in.]~ ϕ 40 [1.575in.]

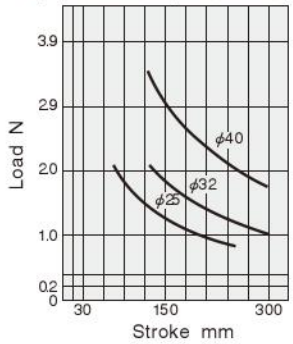

ϕ 50 [1.969in.]~ ϕ 100 [3.940in.]

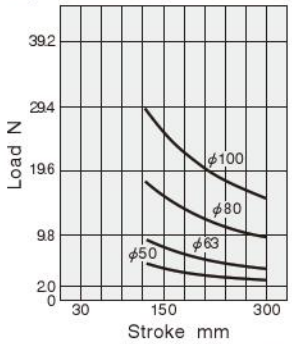

1N = 0.2248lbf.
1mm = 0.0394in.

Single acting cylinders

Standard cylinders single acting push type
Standard cylinders single acting pull type
Double rod cylinders single acting type
Tandem cylinders single acting push type
Dual stroke cylinders single acting push type
Dual stroke cylinders single acting pull type

If in the above types' application, air is being continuously applied from a connection port, and the spring remains in a compressed state for long periods of time, the piston may sometimes fail to return to its original position even after the air is exhausted. If equipment is to be used in this way over long periods of time, consult us.

End keep cylinder

●Control circuit

1. For control of Jig end keep cylinders, we recommend the use of 2-position, 4-, 5-port valves. Avoid the use of a control circuit of ABR connections (exhaust centers) with 3-position valves that exhaust air from 2 ports.
2. Always use meter-out control for speed control. Meter-in control may result in failure of the locking mechanism to release.

Notes: 1. It is dangerous to supply air to a connection port on a side with a locking mechanism while already exhausted, because the piston rod could suddenly extend (retract). In addition, it could also cause galling of the lock piston and piston rod, resulting in defective operation. Always supply air to the connection port on the opposite side to ensure back pressure is applied.
2. When restarting operations after air has been exhausted from the cylinder due to completion of operations or to an emergency stop, always start by supplying air to the connection port on the opposite side of the locking mechanism.
3. Connect the valve port A (NC) to the connection port on the side with the locking mechanism.

● Manual operation of the locking mechanism

While the locking mechanism is normally released automatically through cylinder operations, it can also be released manually. For manual release, insert an M3 × 0.5 screw that has 30mm [1.18in.] below head length into the manual override opening, thread it in about 3 turns into the internal lock piston, and then pull up the screw. To maintain the manual override for adjustment, etc., thread the locknut onto the screw and, with the locking mechanism in a released state, tighten the locknut against the cylinder.

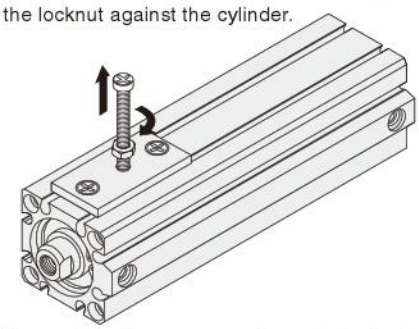

Notes: 1. It is dangerous to release the lock when a load (weight) is present on the piston rod, because it may cause a sudden fall or cause the unintended piston rod's extension (retraction). In this case, always supply air to the connection port opposite the one adjacent to the locking mechanism before releasing the locking mechanism.
2. If the locking mechanism cannot easily be released even with manual override, it could be the result of galling of the lock piston and piston rod. In this case, supply air to the connection port opposite the one adjacent to the locking mechanism before releasing the locking mechanism.
3. Because water, oil, dust, etc., entering via the manual override opening could be a cause of defective locking or other erratic operation, use a cover, etc., for protection when using in locations subject to dripping water, dripping oil, or to large amounts of dust, etc.

Sensor switch

In the standard cylinder, a magnet for the sensor switch is not built-in.
To install a sensor switch, a cylinder with a built-in magnet for the sensor switch is required.

Notes: 1. For the sensor switch mounting location and moving ranges, see p.199.
2. Contact protection measures are required for connecting inductive loads to reed sensor switches or for when capacitive surges are generated. For contact protection measures, see p.1566.

Piping

Always thoroughly blow off (use compressed air) the tubing before connecting it to the cylinder. Entering chips, sealing tape, rust, etc., generated during piping work could result in air leaks or other defective operation.

Atmosphere

1. If using in locations subject to dripping water, dripping oil, etc., or to large amounts of dust, use a cover to protect the unit.
2. The product cannot be used when the media or ambient atmosphere contains any of the substances listed below.
   Organic solvents, phosphate ester type hydraulic oil, sulphur dioxide, chlorine gas, or acids, etc.

Lubrication

The product can be used without lubrication, if lubrication is required, use Turbine Oil Class 1 (**ISO VG32**) or equivalent.
Avoid using spindle oil or machine oil.

OPTIONAL ROD END SHAPE PATTERNS

Use an order form of rod end pattern and fill the items on the selected one from among 22 types of optional patterned shapes to obtain made-to-order cylinders of non-standard rod end shapes. The optional rod end shapes can be applied to the entire Jig Cylinders C Series. For the order form containing the optional patterned shapes, contact us.
(Except ϕ 6, ϕ 8, ϕ 10)

Order Codes

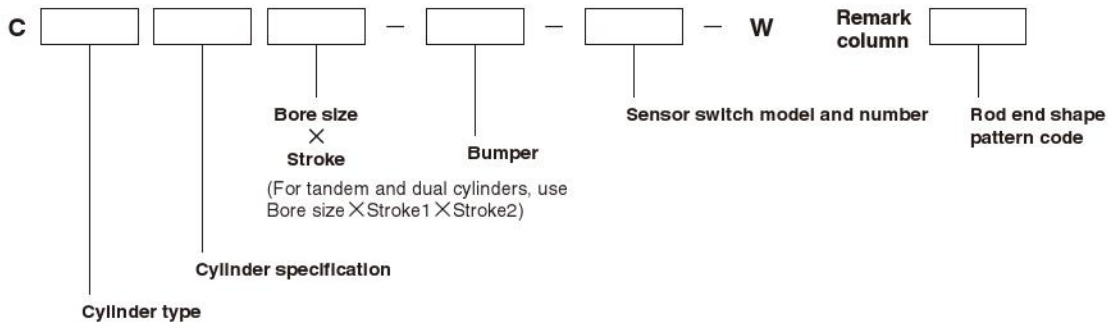

Piston Rod End Shape Pattern Diagrams (22 Types)

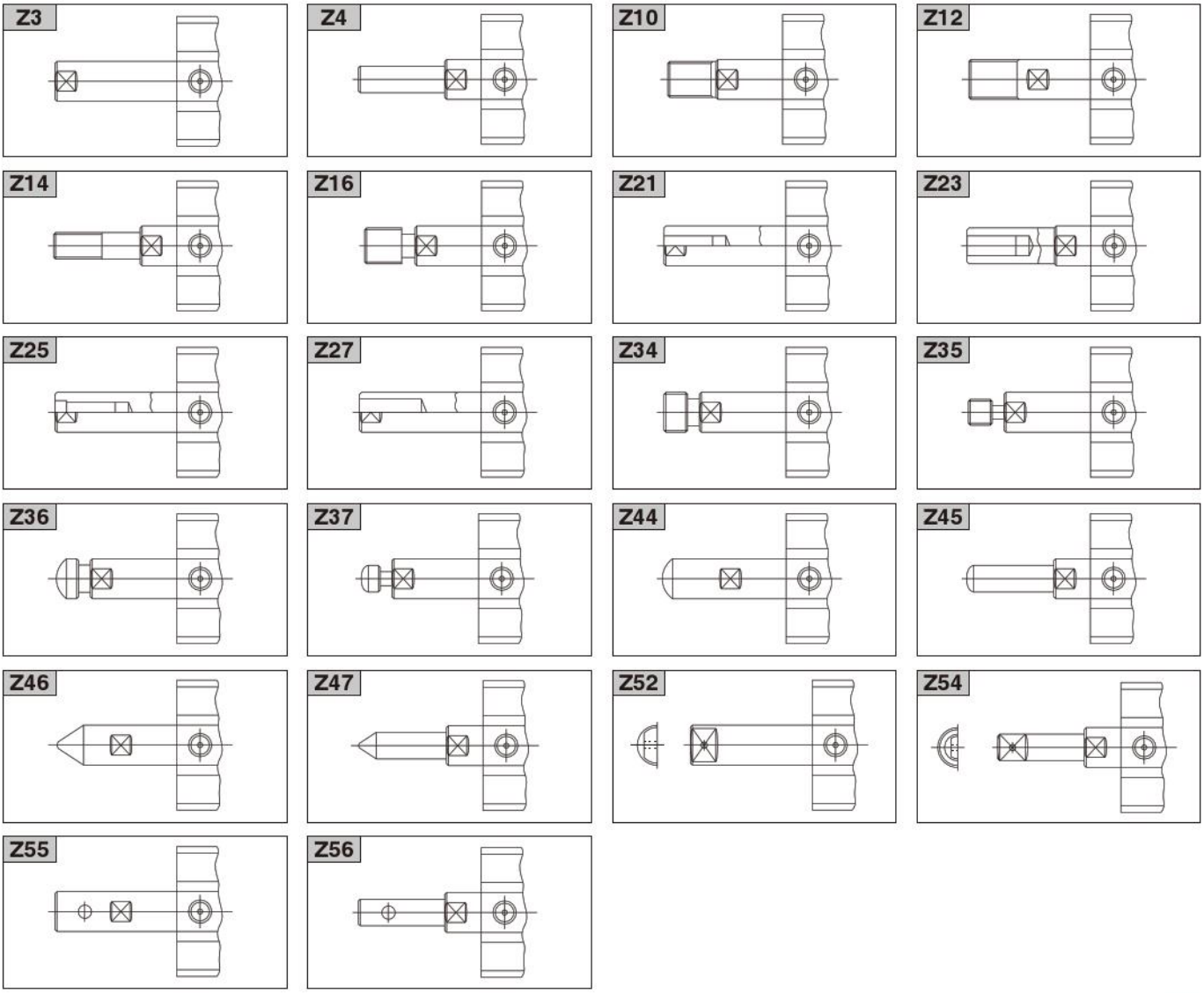

MOUNTING SCREWS FOR JIG CYLINDERS

●Some types of mounting screws specifically for the Jig Cylinders are available.
Use the order codes below to place orders.

List of Order Codes

① Mounting screw type: JIS B 1176 Hexagon socket head cap screws
② Surface treatment: Nickel plated

Applicable cylinder bore size mm [in.]	Mounting screw order code	Screw size	Number of supplied screws
6 [0.236] 8 [0.315] 10 [0.394] 12 [0.472] 16 [0.630] 20 [0.787]	CRK124	M3×25	2
	CRK125	M3×30	
	CRK126	M3×35	
	CRK127	M3×40	
	CRK128	M3×45	
	CRK129	M3×50	
	CRK130	M3×30	4
	CRK131	M3×35	
	CRK132	M3×40	
	CRK133	M3×45	
	CRK134	M3×50	
25 [0.984] 32 [1.260]	CRK135	M4×30	4
	CRK136	M4×35	
	CRK137	M4×40	
	CRK138	M4×45	
	CRK139	M4×50	
	CRK140	M4×55	
	CRK141	M4×60	
	CRK142	M4×65	
	CRK143	M4×70	
	CRK144	M4×75	
40 [1.575]	CRK145	M5×35	4
	CRK146	M5×40	
	CRK147	M5×45	
	CRK148	M5×50	
	CRK149	M5×55	
	CRK150	M5×60	
	CRK151	M5×65	
	CRK152	M5×70	
	CRK153	M5×75	
	CRK154	M5×80	
	CRK155	M5×85	
	CRK156	M5×90	
	CRK157	M5×100	
	CRK158	M5×110	
50 [1.969] 63 [2.480]	CRK159	M6×40	4
	CRK160	M6×45	
	CRK161	M6×50	
	CRK162	M6×55	
	CRK163	M6×60	
	CRK164	M6×65	
	CRK165	M6×70	
	CRK166	M6×75	
	CRK167	M6×80	
	CRK168	M6×85	
	CRK169	M6×90	
	CRK170	M6×100	
	CRK171	M6×110	
	CRK172	M6×120	
	CRK173	M6×130	
	CRK174	M6×140	
	CRK175	M6×150	

Applicable cylinder bore size mm [in.]	Mounting screw order code	Screw size	Number of supplied screws
80 [3.150]	CRK176	M8×60	4
	CRK177	M8×65	
	CRK178	M8×70	
	CRK179	M8×75	
	CRK180	M8×80	
	CRK181	M8×85	
	CRK182	M8×90	
	CRK183	M8×95	
	CRK184	M8×100	
	CRK185	M8×110	
	CRK186	M8×120	
	CRK187	M8×130	
	CRK188	M8×140	
	CRK189	M8×150	
	CRK190	M8×160	
	CRK191	M8×170	
100 [3.940]	CRK192	M10×65	4
	CRK193	M10×70	
	CRK194	M10×75	
	CRK195	M10×80	
	CRK196	M10×85	
	CRK197	M10×90	
	CRK198	M10×95	
	CRK199	M10×100	
	CRK200	M10×110	
	CRK201	M10×120	
	CRK202	M10×130	
	CRK203	M10×140	
	CRK204	M10×150	
	CRK205	M10×160	
	CRK206	M10×170	