CAD drawing data catalog is available.

KOGANEI

ACTUATORS GENERAL CATALOG



# JIG CYLINDERS C SERIES

## CONTENTS


Series Introduction — 133
Cylinder Thrust — 135

Standard Cylinders Double Acting Type, Single Acting Push Type, and Single Acting Pull Type
- Specifications — 137
- Order Codes — 138
- Inner Construction and Major Parts — 139
- Dimensions — 141

Non-rotating Cylinders Double Acting Type
- Specifications — 145
- Order Codes — 146
- Inner Construction and Major Parts — 147
- Dimensions — 148

Square Rod Cylinders Double Acting Type
- Specifications — 149
- Order Codes — 150
- Inner Construction and Major Parts — 151
- Dimensions — 152

Double Rod Cylinders Double Acting Type and Single Acting Type
- Specifications — 154
- Order Codes — 155
- Inner Construction and Major Parts — 156
- Dimensions — 158

Tandem Cylinders Double Acting Type and Single Acting Push Type
- Specifications — 161
- Order Codes — 162
- Inner Construction and Major Parts — 163
- Dimensions — 165

Dual Stroke Cylinders Double Acting Type, Single Acting Push Type, and Single Acting Pull Type
- Specifications — 170
- Order Codes — 171
- Inner Construction and Major Parts — 172
- Dimensions — 174

Lateral Load Resistant Cylinders Double Acting Type
- Specifications — 180
- Order Codes — 181
- Inner Construction and Major Parts — 182
- Dimensions — 183

Long Stroke Cylinders Double Acting Type
- Specifications — 185
- Order Codes — 186
- Inner Construction and Major Parts — 187
- Dimensions — 188

End Keep Cylinders Double Acting Type
- Specifications — 190
- Order Codes — 191
- Inner Construction and Major Parts — 192
- Dimensions — 194

Mounting Brackets — 197
Sensor Switches — 199
Handling Instructions and Precautions — 205
Optional Rod End Shape Patterns — 208
Mounting Screws for Jig Cylinders — 209


⚠ **Caution** **Before use, be sure to read the "Safety Precautions" on p. 57.**

# Square body demonstrates powerful downsizing capacity.

# JIG CYLINDERS C SERIES

## Richly abundant series of 9 different types and 69 models

A rich series configuration spanning from φ6 [0.236in.] to φ100 [3.940in.] responds to diverse needs far better than previous thin type cylinders.
Moreover, Non-ion specification is also available as standard.
(Excludes φ6 [0.236in.], φ8 [0.315in.], and φ10 [0.394in.])

## Provides powerful back-up for device miniaturization

Exhibits no protrusions in its external shape even after a sensor switch has been mounted, for easy mounting in tight spaces.
This cylinder is one step up on cylinders of the same class in terms of size, mass, and performance.

φ6 [0.236in.]

φ100 [3.940in.]

## New Line-Up Includes φ6 [0.236in.], φ8 [0.315in.], and φ10 [0.394in.]

For a greater selection in response to needs for miniaturization, 3 new bore sizes at φ6, φ8, and φ10 have been added, increasing the range of sizes to choose from.

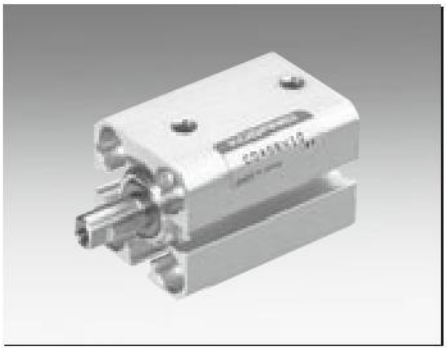

Standard Cylinders
φ6 [0.236in.]～φ100 [3.940in.]

Non-rotating Cylinders
φ6 [0.236in.]～φ10 [0.394in.]

Double Rod Cylinders
φ6 [0.236in.]～φ100 [3.940in.]

# The Jig Cylinders C Series Includes the 9 Types Shown Below.

■Standard Cylinders p.137

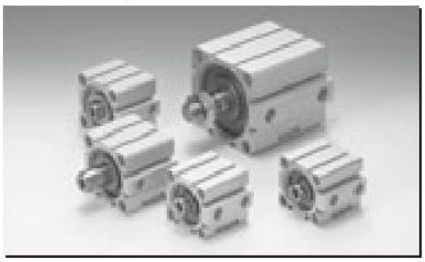

■Non-rotating Cylinders p.145

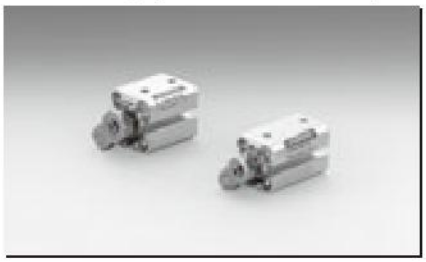

■Square Rod Cylinders p.149

■Double Rod Cylinders p.154

■Tandem Cylinders p.161

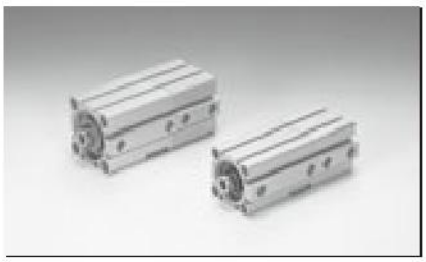

■Dual Stroke Cylinders p.170

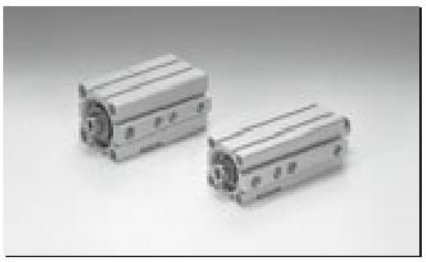

■Lateral Load Resistant Cylinders p.180

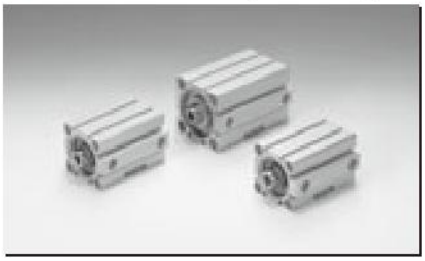

■Long Stroke Cylinders p.185

■End Keep Cylinders p.190

■Mounting Brackets p.197

■Sensor Switches p.199

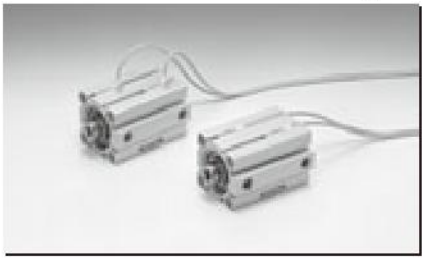

| | Operation type | | | Cylinder specifications | | Rod end specifications | | Bumpers | Centering location | Non-ion specification | Mounting brackets | | |
|---|---|---|---|---|---|---|---|---|---|---|---|---|---|
| | Double acting type | Single acting push type | Single acting pull type | Cylinder with magnet | Heat resistant type | Female thread | Male thread | Not available for heat resistant type | | Not available for heat resistant type | Foot mounting bracket | Flange mounting bracket | Clevis mounting bracket |
| Standard Cylinders | ■ | ■ | ■ | ■ | □ | ■ | ■ | □ | □ | □ | □ | □ | |
| Non-rotating Cylinders | ■ Note | | | ■ Note | | ■ Note | ■ Note | | | | | | |
| Square Rod Cylinders | □ | | | □ | | □ | □ | □ | □ | | □ | □ | |
| Double Rod Cylinders | ■ | □ | □ | ■ | □ | ■ | ■ | □ | □ | □ | □ | □ | |
| Tandem Cylinders | □ | □ | | □ | □ | □ | □ | □ | □ | □ | | □ | |
| Dual Stroke Cylinders | □ | □ | □ | □ | | □ | □ | □ | □ | □ | | □ | |
| Lateral Load Resistant Cylinders | □ | | | □ | | □ | □ | □ | □ | □ | □ | □ | □ |
| Long Stroke Cylinders | □ | | | □ | | □ | □ | □ | □ | □ | □ | □ | □ |
| End Keep Cylinders | □ | | | □ | | □ | □ | □ | □ | □ | □ | □ | □ |

■ The colored areas include bore sizes of $\phi$6, $\phi$8, and $\phi$10.
Note: Non-rotating cylinders are set at bore sizes $\phi$6, $\phi$8, and $\phi$10 only.

# Cylinder Thrust

Select a suitable bore size considering the load and air pressure to obtain the required thrust.
Since the figures in the table are calculated values, select a bore size that results in a load ratio (load ratio = $\frac{\text{Load}}{\text{Calculated value}}$) of 70% or less (50% or less for high speed).

## ● Double acting type

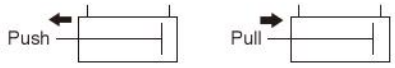


N [lbf.]

| Bore size mm [in.] | Piston rod diameter mm [in.] | Operation | Pressure area mm² [in.²] | Air pressure MPa [psi.] 0.1 [15] | 0.2 [29] | 0.3 [44] | 0.4 [58] | 0.5 [73] | 0.6 [87] | 0.7 [102] | 0.8 [116] | 0.9 [131] | 1.0 [145] |
|---|---|---|---|---|---|---|---|---|---|---|---|---|---|
| **6 [0.236]** | 4 [0.157] | Push side | 28.3 [0.0439] | 2.8 [0.63] | 5.7 [1.28] | 8.5 [1.91] | 11.3 [2.54] | 14.1 [3.17] | 17.0 [3.82] | 19.8 [4.45] | 22.6 [5.08] | 25.4 [5.71] | – |
| | | Pull side | 15.7 [0.0243] | 1.6 [0.36] | 3.1 [0.7] | 4.7 [1.06] | 6.3 [1.42] | 7.9 [1.78] | 9.4 [2.11] | 11.0 [2.47] | 12.6 [2.83] | 14.1 [3.17] | – |
| **8 [0.315]** | 5 [0.197] | Push side | 50.3 [0.0780] | 5.0 [1.12] | 10.1 [2.27] | 15.1 [3.39] | 20.1 [4.52] | 25.1 [5.64] | 30.2 [6.79] | 35.2 [7.91] | 40.2 [9.04] | 45.2 [10.2] | – |
| | | Pull side | 30.6 [0.0474] | 3.1 [0.70] | 6.1 [1.37] | 9.2 [2.07] | 12.3 [2.77] | 15.3 [3.44] | 18.4 [4.14] | 21.4 [4.81] | 24.5 [5.51] | 27.6 [6.20] | – |
| **10 [0.394]** | 5 [0.197] | Push side | 78.5 [0.1217] | 7.9 [1.78] | 15.7 [3.53] | 23.6 [5.31] | 31.4 [7.06] | 39.3 [8.83] | 47.1 [10.6] | 55.0 [12.4] | 62.8 [14.1] | 70.7 [15.9] | – |
| | | Pull side | 58.9 [0.0913] | 5.9 [1.33] | 11.8 [2.65] | 17.7 [3.98] | 23.6 [5.31] | 29.5 [6.63] | 35.3 [7.94] | 41.2 [9.26] | 47.1 [10.6] | 53.0 [11.9] | – |
| **12 [0.472]** | 6 [0.236] | Push side | 113.0 [0.175] | 11.3 [2.54] | 22.6 [5.08] | 33.9 [7.62] | 45.2 [10.2] | 56.5 [12.7] | 67.8 [15.2] | 79.1 [17.8] | 90.4 [20.3] | 101.7 [22.86] | 113.0 [25.40] |
| | | Pull side | 84.8 [0.131] | 8.5 [1.91] | 17.0 [3.82] | 25.4 [5.71] | 33.9 [7.62] | 42.4 [9.53] | 50.9 [11.4] | 59.3 [13.3] | 67.8 [15.2] | 76.3 [17.2] | 84.8 [19.1] |
| **16 [0.630]** | 8 [0.315] | Push side | 201.0 [0.312] | 20.1 [4.52] | 40.2 [9.04] | 60.3 [13.6] | 80.4 [18.1] | 100.5 [22.59] | 120.6 [27.11] | 140.7 [31.63] | 160.8 [36.15] | 180.9 [40.67] | 201.0 [45.18] |
| | | Pull side | 150.0 [0.233] | 15.1 [3.39] | 30.1 [6.77] | 45.2 [10.2] | 60.3 [13.6] | 75.4 [16.9] | 90.4 [20.3] | 105.5 [23.72] | 120.6 [27.11] | 135.6 [30.48] | 150.7 [33.88] |
| **20 [0.787]** | 10 [0.394] | Push side | 314.0 [0.487] | 31.4 [7.06] | 62.8 [14.1] | 94.2 [21.2] | 125.6 [28.23] | 157.0 [35.29] | 188.4 [42.35] | 219.8 [49.41] | 251.2 [56.47] | 282.6 [63.53] | 314.0 [70.59] |
| | | Pull side | 235.5 [0.365] | 23.6 [5.31] | 47.1 [10.6] | 70.7 [15.9] | 94.2 [21.2] | 117.8 [26.48] | 141.3 [31.76] | 164.9 [37.07] | 188.4 [42.35] | 212.0 [47.66] | 235.5 [52.94] |
| **25 [0.984]** | 12 [0.472] | Push side | 490.6 [0.760] | 49.1 [11.0] | 98.1 [22.1] | 147.2 [33.09] | 196.3 [44.13] | 245.3 [55.14] | 294.4 [66.18] | 343.4 [77.20] | 392.5 [88.23] | 441.6 [99.27] | 490.6 [110.3] |
| | | Pull side | 377.6 [0.585] | 37.8 [8.50] | 75.5 [17.0] | 113.3 [25.47] | 151.0 [33.94] | 188.8 [42.44] | 226.6 [50.94] | 264.3 [59.41] | 302.1 [67.91] | 339.8 [76.39] | 377.6 [84.88] |
| **32 [1.260]** | 16 [0.630] | Push side | 803.8 [1.246] | 80.4 [18.1] | 160.8 [36.15] | 241.2 [54.22] | 321.5 [72.27] | 401.9 [90.35] | 482.3 [108.4] | 562.7 [126.5] | 643.1 [144.6] | 723.5 [162.6] | 803.8 [180.7] |
| | | Pull side | 602.9 [0.934] | 60.3 [13.6] | 120.6 [27.11] | 180.9 [40.67] | 241.2 [54.22] | 301.4 [67.75] | 361.7 [81.31] | 422.0 [94.87] | 482.3 [108.4] | 542.6 [122.0] | 602.9 [135.5] |
| **40 [1.575]** | 16 [0.630] | Push side | 1256.0 [1.947] | 125.6 [28.23] | 251.2 [56.47] | 376.8 [84.70] | 502.4 [112.9] | 628.0 [141.2] | 753.6 [169.4] | 879.2 [197.6] | 1004.8 [225.9] | 1130.4 [254.1] | 1256.0 [282.3] |
| | | Pull side | 1055.0 [1.635] | 105.5 [23.72] | 211.0 [47.43] | 316.5 [71.15] | 422.0 [94.87] | 527.5 [118.6] | 633.0 [142.3] | 738.5 [166.0] | 844.0 [189.7] | 949.5 [213.4] | 1055.0 [237.2] |
| **50 [1.969]** | 20 [0.787] | Push side | 1962.5 [3.042] | 196.3 [44.13] | 392.5 [88.23] | 588.8 [132.4] | 785.0 [176.5] | 981.3 [220.6] | 1177.5 [264.7] | 1373.8 [308.8] | 1570.0 [352.9] | 1766.3 [397.1] | 1962.5 [441.2] |
| | | Pull side | 1648.5 [2.555] | 164.9 [37.07] | 329.7 [74.12] | 494.6 [111.2] | 659.4 [148.2] | 824.3 [185.3] | 989.1 [222.3] | 1154.0 [259.4] | 1318.8 [296.5] | 1483.7 [333.5] | 1648.5 [370.6] |
| **63 [2.480]** | 20 [0.787] | Push side | 3115.7 [4.829] | 311.6 [70.05] | 623.1 [140.1] | 934.7 [210.1] | 1246.3 [280.2] | 1557.8 [350.2] | 1869.4 [420.2] | 2181.0 [490.3] | 2492.5 [560.3] | 2804.1 [630.4] | 3115.7 [700.4] |
| | | Pull side | 2801.7 [4.343] | 280.2 [62.99] | 560.3 [126.0] | 840.5 [188.9] | 1120.7 [251.9] | 1400.8 [314.9] | 1681.0 [377.9] | 1961.2 [440.9] | 2241.3 [503.8] | 2521.5 [566.8] | 2801.7 [629.8] |
| **80 [3.150]** | 25 [0.984] | Push side | 5024.0 [7.787] | 502.4 [112.9] | 1004.8 [225.9] | 1507.2 [338.8] | 2009.6 [451.8] | 2512.0 [564.7] | 3014.4 [677.6] | 3516.8 [790.6] | 4019.2 [903.5] | 4521.6 [1016.5] | 5024.0 [1129.4] |
| | | Pull side | 4533.4 [7.027] | 453.3 [101.9] | 906.7 [203.8] | 1360.0 [305.7] | 1813.4 [407.7] | 2266.7 [509.6] | 2720.0 [611.5] | 3173.4 [713.4] | 3626.7 [815.3] | 4080.0 [917.2] | 4533.4 [1019.1] |
| **100 [3.940]** | 32 [1.181] | Push side | 7850.0 [12.168] | 785.0 [176.5] | 1570.0 [352.9] | 2355.0 [529.4] | 3140.0 [705.9] | 3925.0 [882.3] | 4710.0 [1058.8] | 5495.0 [1235.3] | 6280.0 [1411.7] | 7065.0 [1588.2] | 7850.0 [1764.7] |
| | | Pull side | 7046.2 [10.922] | 704.6 [158.4] | 1409.2 [316.8] | 2113.8 [475.2] | 2818.5 [633.6] | 3523.1 [792.0] | 4227.7 [950.4] | 4932.3 [1108.8] | 5636.9 [1267.2] | 6341.5 [1425.6] | 7046.2 [1584.0] |

## ● Single acting type

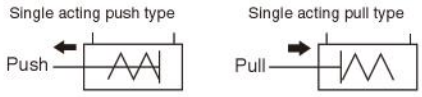


N [lbf.]

| Operation type | Bore size mm [in.] | Piston rod diameter mm [in.] | Pressure area mm² [in.²] | Air pressure MPa [psi.] 0.1 [15] | 0.2 [29] | 0.3 [44] | 0.4 [58] | 0.5 [73] | 0.6 [87] | 0.7 [102] | 0.8 [116] | 0.9 [131] | 1.0 [145] |
|---|---|---|---|---|---|---|---|---|---|---|---|---|---|
| Single acting push type | **6 [0.236]** | 4 [0.157] | 28.3 [0.0439] | – | – | 5.6 [1.26] | 8.4 [1.89] | 11.2 [2.52] | 14.1 [3.17] | 16.9 [3.80] | 19.7 [4.43] | 22.5 [5.06] | – |
| | **8 [0.315]** | 5 [0.197] | 50.3 [0.0780] | – | – | 10.4 [2.34] | 15.4 [3.46] | 20.4 [4.59] | 25.5 [5.73] | 30.5 [6.86] | 35.5 [7.98] | 40.5 [9.10] | – |
| | **10 [0.394]** | 5 [0.197] | 78.5 [0.1217] | – | – | 18.9 [4.25] | 26.7 [6.00] | 34.6 [7.78] | 42.4 [9.53] | 50.3 [11.3] | 58.1 [13.1] | 66.0 [14.8] | – |
| | **12 [0.472]** | 6 [0.236] | 113.0 [0.175] | – | 12.8 [2.88] | 24.1 [5.42] | 35.4 [7.96] | 46.7 [10.5] | 58.0 [13.0] | 69.3 [15.6] | 80.6 [18.1] | 91.9 [20.7] | 103.2 [23.20] |
| | **16 [0.630]** | 6 [0.236] | 201.0 [0.312] | – | 26.1 [5.87] | 46.2 [10.4] | 66.3 [14.9] | 86.4 [19.4] | 106.5 [23.94] | 126.6 [28.46] | 146.7 [32.98] | 166.8 [37.50] | 186.9 [42.02] |
| | **20 [0.787]** | 8 [0.315] | 314.0 [0.487] | – | 49.0 [11.0] | 80.4 [18.1] | 111.8 [25.13] | 143.2 [32.19] | 174.6 [39.25] | 206.0 [46.31] | 237.4 [53.37] | 268.8 [60.43] | 300.2 [67.48] |
| | **25 [0.984]** | 10 [0.394] | 490.6 [0.760] | – | 76.3 [17.2] | 125.4 [28.19] | 174.5 [39.23] | 223.5 [50.24] | 272.6 [61.28] | 321.6 [72.30] | 370.7 [83.33] | 419.8 [94.37] | 468.8 [105.4] |
| | **32 [1.260]** | 12 [0.472] | 803.8 [1.246] | – | 123.4 [27.74] | 203.8 [45.81] | 284.1 [63.87] | 364.5 [81.94] | 444.9 [100.0] | 525.3 [118.1] | 605.7 [136.2] | 686.1 [154.2] | 766.4 [172.3] |
| | **40 [1.575]** | 16 [0.630] | 1256.0 [1.947] | – | 205.9 [46.29] | 331.5 [74.52] | 457.1 [102.8] | 582.7 [131.0] | 708.3 [159.2] | 833.9 [187.5] | 959.5 [215.7] | 1085.1 [243.9] | 1210.5 [272.1] |
| | **50 [1.969]** | 20 [0.787] | 1962.5 [3.042] | 141.0 [31.70] | 337.2 [75.80] | 533.5 [119.9] | 729.7 [164.0] | 926.0 [208.2] | 1122.2 [252.3] | 1318.5 [296.4] | 1514.7 [340.5] | 1711.0 [384.6] | 1907.2 [428.7] |
| Single acting pull type | **6 [0.236]** | 4 [0.157] | 15.7 [0.0243] | – | – | 1.8 [0.40] | 3.4 [0.76] | 5.0 [1.12] | 6.5 [1.46] | 8.1 [1.82] | 9.7 [2.18] | 11.2 [2.52] | – |
| | **8 [0.315]** | 5 [0.197] | 30.6 [0.0474] | – | – | 4.5 [1.01] | 7.6 [1.71] | 10.6 [2.38] | 13.7 [3.08] | 16.7 [3.75] | 19.8 [4.45] | 22.9 [5.15] | – |
| | **10 [0.394]** | 5 [0.197] | 58.9 [0.0913] | – | – | 13.0 [2.92] | 18.9 [4.25] | 24.8 [5.58] | 30.6 [6.88] | 36.5 [8.21] | 42.4 [9.53] | 48.3 [10.9] | – |
| | **12 [0.472]** | 6 [0.236] | 84.8 [0.131] | – | 7.2 [1.62] | 15.6 [3.51] | 24.1 [5.42] | 32.6 [7.33] | 41.1 [9.24] | 49.5 [11.1] | 58.0 [13.0] | 66.5 [14.9] | 75.0 [16.9] |
| | **16 [0.630]** | 6 [0.236] | 150.7 [0.234] | – | 16.0 [3.60] | 31.1 [6.99] | 46.2 [10.4] | 61.3 [13.8] | 76.3 [17.2] | 91.4 [20.5] | 106.5 [23.94] | 121.5 [27.31] | 136.6 [30.71] |
| | **20 [0.787]** | 8 [0.315] | 235.5 [0.365] | – | 33.3 [7.49] | 56.9 [12.8] | 80.4 [18.1] | 104.0 [23.38] | 127.5 [28.66] | 151.1 [33.97] | 174.6 [39.25] | 198.2 [44.56] | 221.7 [49.84] |
| | **25 [0.984]** | 10 [0.394] | 377.6 [0.585] | – | 75.5 [17.0] | 113.3 [25.47] | 151.0 [33.94] | 188.8 [42.44] | 226.6 [50.94] | 264.3 [59.41] | 302.1 [67.91] | 339.8 [76.39] | 377.6 [84.88] |
| | **32 [1.260]** | 12 [0.472] | 602.9 [0.934] | – | 61.4 [13.8] | 121.7 [27.36] | 182.0 [40.91] | 242.2 [54.45] | 302.5 [68.00] | 362.8 [81.56] | 423.1 [95.11] | 483.4 [108.7] | 543.7 [122.2] |
| | **40 [1.575]** | 16 [0.630] | 1055.0 [1.635] | – | 165.7 [37.25] | 271.2 [60.97] | 376.7 [84.68] | 482.2 [108.4] | 587.7 [132.1] | 693.2 [155.8] | 798.7 [179.5] | 904.2 [203.3] | 1009.7 [227.0] |
| | **50 [1.969]** | 20 [0.787] | 1648.5 [2.555] | 109.6 [24.64] | 274.4 [61.69] | 439.3 [98.75] | 604.1 [135.8] | 769.0 [172.9] | 933.8 [209.9] | 1098.7 [247.0] | 1263.5 [284.0] | 1428.4 [321.1] | 1593.2 [358.2] |

## ●Spring return force

N [lbf.]

| Bore size mm | Stroke mm | Zero stroke | End of stroke |
|---|---|---|---|
| 6 | ×5 | 2.1 [0.47] | 2.9 [0.65] |
| | ×10 | 1.2 [0.27] | |
| 8 | ×5 | 3.3 [0.74] | 4.7 [1.06] |
| | ×10 | 1.9 [0.43] | |
| 10 | ×5 | 3.3 [0.74] | 4.7 [1.06] |
| | ×10 | 1.9 [0.43] | |
| 12 | ×5 | 7.7 [1.73] | 9.8 [2.20] |
| | ×10 | 5.7 [1.28] | |
| | ×15 | 3.7 [0.83] | |
| | ×20 | 5.7 [1.28] | |
| | ×25 | 4.7 [1.06] | |
| | ×30 | 3.7 [0.83] | |
| 16 | ×5 | 11.1 [2.50] | 14.1 [3.17] |
| | ×10 | 8.2 [1.84] | |
| | ×15 | 5.3 [1.19] | |
| | ×20 | 8.2 [1.84] | |
| | ×25 | 6.7 [1.51] | |
| | ×30 | 5.3 [1.19] | |
| 20 | ×5 | 11.6 [2.61] | 13.8 [3.10] |
| | ×10 | 9.5 [2.14] | |
| | ×15 | 7.3 [1.64] | |
| | ×20 | 9.5 [2.14] | |
| | ×25 | 8.4 [1.89] | |
| | ×30 | 7.3 [1.64] | |

N [lbf.]

| Bore size mm | Stroke mm | Zero stroke | End of stroke |
|---|---|---|---|
| 25 | ×5 | 18.1 [4.07] | 21.8 [4.90] |
| | ×10 | 14.5 [3.26] | |
| | ×15 | 10.7 [2.41] | |
| | ×20 | 14.5 [3.26] | |
| | ×25 | 12.7 [2.85] | |
| | ×30 | 10.9 [2.45] | |
| 32 | ×5 | 32.0 [7.19] | 37.4 [8.41] |
| | ×10 | 26.7 [6.00] | |
| | ×15 | 21.3 [4.79] | |
| | ×20 | 26.7 [6.00] | |
| | ×25 | 24.0 [5.40] | |
| | ×30 | 21.3 [4.79] | |
| 40 | ×5 | 37.7 [8.47] | 45.3 [10.18] |
| | ×10 | 30.2 [6.79] | |
| | ×15 | 22.6 [5.08] | |
| | ×20 | 30.2 [6.79] | |
| | ×25 | 26.4 [5.93] | |
| | ×30 | 22.6 [5.08] | |
| 50 | ×10 | 45.4 [10.21] | 55.3 [12.43] |
| | ×15 | 40.5 [9.10] | |
| | ×20 | 35.5 [7.98] | |
| | ×25 | 43.0 [9.67] | |
| | ×30 | 40.5 [9.10] | |
| | ×35 | 38.0 [8.54] | |
| | ×40 | 35.5 [7.98] | |

## ●How to read the thrust table

1. For the thrust of the double rod cylinder double acting type, see the pull side of the double acting type thrust table. For the thrust of the single acting type, see the single acting pull type thrust table.
2. The thrust of the tandem cylinder is double that of the standard type when air is supplied simultaneously to Port A and Port B, for any operation type before the stroke in Cylinder 1 is complete. When air is supplied to any of Ports A, B, or C alone, then the thrust is the same as for the standard type.

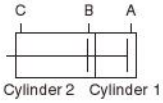


3. The thrust for dual stroke cylinders is the same as for the standard type, for any operation type.
4. When directly carrying a load, care must be exercised of a lateral load.
   For details, see p.206 “Lateral Load.”

## ●Square rod cylinders

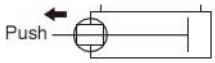


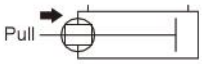


N [lbf.]

| Bore size mm [in.] | Piston rod size mm [in.] | Operation | Pressure area mm² [in.²] | Air pressure MPa 0.1 [15] | 0.2 [29] | 0.3 [44] | 0.4 [58] | 0.5 [73] | 0.6 [87] | 0.7 [102] | 0.8 [116] | 0.9 [131] | 1.0 [145] |
|---|---|---|---|---|---|---|---|---|---|---|---|---|---|
| 20 [0.787] | □7.4 [□0.291] | Push side | 314.0 [0.487] | 31.4 [7.06] | 62.8 [14.1] | 94.2 [21.2] | 125.6 [28.23] | 157.0 [35.29] | 188.4 [42.35] | 219.8 [49.41] | 251.2 [56.47] | 282.6 [63.53] | 314.0 [70.59] |
| | | Pull side | 259.2 [0.402] | 25.9 [5.82] | 51.8 [11.6] | 77.8 [17.5] | 103.7 [23.3] | 129.6 [29.13] | 155.5 [34.96] | 181.5 [40.80] | 207.4 [46.62] | 233.3 [52.45] | 259.2 [58.27] |
| 25 [0.984] | | Push side | 490.6 [0.760] | 49.1 [11.0] | 98.1 [22.1] | 147.2 [33.09] | 196.3 [44.13] | 245.3 [55.14] | 294.4 [66.18] | 343.4 [77.20] | 392.5 [88.23] | 441.6 [99.27] | 490.6 [110.3] |
| | | Pull side | 435.9 [0.676] | 43.6 [9.80] | 87.2 [19.6] | 130.8 [29.40] | 174.3 [39.18] | 217.9 [48.98] | 261.5 [58.79] | 305.1 [68.59] | 348.7 [78.39] | 392.3 [88.19] | 435.9 [97.99] |
| 32 [1.260] | □13 [□0.512] | Push side | 803.8 [1.246] | 80.4 [18.1] | 160.8 [36.15] | 241.2 [54.22] | 321.5 [72.27] | 401.9 [90.35] | 482.3 [108.4] | 562.7 [126.5] | 643.1 [144.6] | 723.5 [162.6] | 803.8 [180.7] |
| | | Pull side | 634.8 [0.984] | 63.5 [14.3] | 127.0 [28.55] | 190.5 [42.82] | 253.9 [57.08] | 317.4 [71.35] | 380.9 [85.63] | 444.4 [99.90] | 507.9 [114.2] | 571.4 [128.5] | 634.8 [142.7] |
| 40 [1.575] | | Push side | 1256.0 [1.947] | 125.6 [28.23] | 251.2 [56.47] | 376.8 [84.70] | 502.4 [112.9] | 628.0 [141.2] | 753.6 [169.4] | 879.2 [197.6] | 1004.8 [225.9] | 1130.4 [254.1] | 1256.0 [282.3] |
| | | Pull side | 1087.0 [1.685] | 108.7 [24.44] | 217.4 [48.87] | 326.1 [73.31] | 434.8 [97.74] | 543.5 [122.2] | 652.2 [146.6] | 760.9 [171.1] | 869.6 [195.5] | 978.3 [219.9] | 1087.0 [244.4] |
| 50 [1.969] | □18 [□0.709] | Push side | 1962.5 [3.042] | 196.3 [44.13] | 392.5 [88.23] | 588.8 [132.4] | 785.0 [176.5] | 981.3 [220.6] | 1177.5 [264.7] | 1373.8 [308.8] | 1570.0 [352.9] | 1766.3 [397.1] | 1962.5 [441.2] |
| | | Pull side | 1638.5 [2.540] | 163.9 [36.84] | 327.7 [73.67] | 491.6 [110.5] | 655.4 [147.3] | 819.3 [184.2] | 983.1 [221.0] | 1147.0 [257.8] | 1310.8 [294.7] | 1474.7 [331.5] | 1638.5 [368.3] |
| 63 [2.480] | | Push side | 3115.7 [4.829] | 311.6 [70.05] | 623.1 [140.1] | 934.7 [210.1] | 1246.3 [280.2] | 1557.8 [350.2] | 1869.4 [420.2] | 2181.0 [490.3] | 2492.5 [560.3] | 2804.1 [630.4] | 3115.7 [700.4] |
| | | Pull side | 2791.7 [4.327] | 279.2 [62.76] | 558.3 [125.5] | 837.5 [188.3] | 1116.7 [251.0] | 1395.8 [313.8] | 1675.0 [376.5] | 1954.2 [439.3] | 2233.3 [502.0] | 2512.5 [564.8] | 2791.7 [627.6] |

# JIG CYLINDERS C SERIES STANDARD CYLINDERS

**Double Acting Type,**
**Single Acting Push Type, Single Acting Pull Type**

## Symbols

● **Double acting type** ● **Single acting push type** ● **Single acting pull type**

## Specifications

| Item / Bore size mm [in.] | | 6 [0.236] | 8 [0.315] | 10 [0.394] | 12 [0.472] | 16 [0.630] | 20 [0.787] | 25 [0.984] | 32 [1.260] | 40 [1.575] | 50 [1.969] | 63 [2.480] | 80 [3.150] | 100 [3.940] |
|---|---|---|---|---|---|---|---|---|---|---|---|---|---|---|
| Operation type | | Double acting type, Single acting push type, Single acting pull type | | | | | | | | | | Double acting type | | |
| Media | | Air | | | | | | | | | | | | |
| Operating pressure range MPa [psi.] | Double acting type | 0.15～0.9 [22～131] | | | 0.1～1.0 [15～145] | | | | | | 0.05～1.0 [7～145] | | | |
| | Single acting type | 0.25～0.9 [36～131] | | | 0.15～1.0 Note1 [22～145] | | | | | | 0.1～1.0 [15～145] | — | | |
| Proof pressure | MPa [psi.] | 1.35 [196] | | | 1.5 [218] | | | | | | | | | |
| Operating temperature range | °C [°F] | 0～60 [32～140] (The heat resistant specification is 120 [248]. Note2) | | | | | | | | | | | | |
| Operating speed range mm/s [in./sec.] | Double acting type | 30～500 [1.2～19.7] | | | 30～500 [1.2～19.7] | | | | | | 30～300 [1.2～11.8] | | | |
| | Single acting type | 50～500 [2.0～19.7] | | | 100～500 [3.9～19.7] | | | | | | 100～300 [3.9～11.8] | — | | |
| Cushion | Double acting type | None | | | Rubber bumper (Option Note3) | | | | | | | | | |
| | Single acting type | None | | | | | | | | | | — | | |
| Lubrication | | Not required (If lubrication is required, use Turbine Oil Class 1 [**ISO VG32**] or equivalent.) | | | | | | | | | | | | |
| Port size | | M3×0.5 | | | M5×0.8 | | | | Rc1/8 | | Rc1/4 | | Rc3/8 | |

Remark: For Handling Instructions and Precautions, see p.205.

Notes: 1. The single acting pull type of $\phi$12 is 0.18～1.0MPa [26～145psi.].
2. For heat resistant specification, it is not available with the sensor switch. Not available for bore sizes $\phi$6, $\phi$8, and $\phi$10.
3. Not available for bore sizes $\phi$6, $\phi$8, and $\phi$10, and heat resistant specification.

Note: For strokes that exceed the maximum standard strokes for each double acting type cylinder's bore size, use the long stroke cylinders on p.185～189.

## Bore Size and Stroke

For non-standard strokes, see p.206. mm

| Operation type | Bore size | Standard strokes: Standard cylinder | Standard strokes: Cylinder with magnet |
|---|---|---|---|
| Double acting type | 6 | 5, 10, 15, 20 | 5, 10, 15, 20 |
| | 8 | | |
| | 10 | | |
| | 12 | 5, 10, 15, 20, 25, 30 | 5, 10, 15, 20, 25, 30 |
| | 16 | | |
| | 20 | 5, 10, 15, 20, 25, 30, 35, 40, 45, 50 | 5, 10, 15, 20, 25, 30, 35, 40, 45, 50 |
| | 25 | | |
| | 32 | 5, 10, 15, 20, 25, 30, 35, 40, 45, 50, 75, 100 | 5, 10, 15, 20, 25, 30, 35, 40, 45, 50, 75, 100 |
| | 40 | | |
| | 50 | 10, 15, 20, 25, 30, 35, 40, 45, 50, 75, 100 | 10, 15, 20, 25, 30, 35, 40, 45, 50, 75, 100 |
| | 63 | | |
| | 80 | | |
| | 100 | | |
| Single acting type | 6 | 5, 10 | 5, 10 |
| | 8 | | |
| | 10 | | |
| | 12 | 5, 10, 15, 20, 25, 30 | 5, 10, 15, 20, 25, 30 |
| | 16 | | |
| | 20 | | |
| | 25 | | |
| | 32 | | |
| | 40 | | |
| | 50 | 10, 15, 20, 25, 30, 35, 40 | 10, 15, 20, 25, 30, 35, 40 |

Remarks: 1. Stroke tolerance $^{+1}_{0}$ [$^{+0.039in.}_{0}$]
2. In most cases, body cutting is used for the non-standard strokes. However, body cutting is not used for strokes of less than 5mm for $\phi$12～$\phi$40, and strokes of less than 10mm for $\phi$50～$\phi$100. The collar packed is used for these cases.

## Order Codes for Standard Cylinders

**Operation type**

**DA :** Double acting type
**SA :** Single acting push type
**TA :** Single acting pull type

**Rod end specification**

Female thread

Male thread

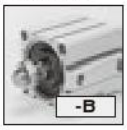


**Mounting type**

Basic type

Foot mounting type Note7

Flange mounting type Note6

**Sensor switch type** Note4
(For cylinder with magnet)

**Blank:**
No sensor switch

**-ZE135 :** With ZE135
- 2-lead wire Solid state type
- With indicator lamp
- DC10～28V
- Horizontal lead wire

**-ZE155 :** With ZE155
- 3-lead wire Solid state type
- With indicator lamp
- DC4.5～28V
- Horizontal lead wire

**-ZE235 :** With ZE235
- 2-lead wire Solid state type
- With indicator lamp
- DC10～28V
- Vertical lead wire

**-ZE255 :** With ZE255
- 3-lead wire Solid state type
- With indicator lamp
- DC4.5～28V
- Vertical lead wire

**-ZE101 :** With ZE101 Note7
- 2-lead wire Reed switch type
- Without indicator lamp
- DC5～28V AC85～115V
- Horizontal lead wire

**-ZE102 :** With ZE102 Note7
- 2-lead wire Reed switch type
- With indicator lamp
- DC10～28V AC85～115V
- Horizontal lead wire

**-ZE201 :** With ZE201 Note7
- 2-lead wire Reed switch type
- Without indicator lamp
- DC5～28V AC85～115V
- Vertical lead wire

**-ZE202 :** With ZE202 Note7
- 2-lead wire Reed switch type
- With indicator lamp
- DC10～28V AC85～115V
- Vertical lead wire

**Lead wire length**

**A :** 1000mm [39in.]
**B :** 3000mm [118in.]

**Number of sensor switches**
(For cylinder with magnet)
**Blank:**
No sensor switch

**1 :** With 1 sensor switch
**2 :** With 2 sensor switches

**Cylinder specification**

**Blank :** Standard cylinder Note1 (Non-ion specification Note8)
**S :** Cylinder with magnet (Non-ion specification Note8)
**F :** Heat resistant cylinder Note2

**Bumper** Note3

**Blank :** No bumper
**-R :** With bumper

**Centering location** Note5

**Blank :** No centering location
**-G :** With centering location

| Basic type | | | Bore size × Stroke | | | | | | | |
|---|---|---|---|---|---|---|---|---|---|---|
| C | DA<br>SA<br>TA | S<br>F | × | -B | -R | -G | -1<br>-3 | -ZE135<br>-ZE155<br>-ZE235<br>-ZE255<br>-ZE101<br>-ZE102<br>-ZE201<br>-ZE202 | A<br>B | 1<br>2<br>⋮<br>n |

- See table for bore size and stroke.
- For information regarding the cylinder joint and cylinder rod end for male thread, see p.1568.
- For the order codes of sensor switches only, see p.199.
- For heat resistant specification, sensor switch is not available.
- Mounting brackets are included at shipping. For the clevis type, see p.181, Lateral Load Resistant Cylinders.
- In sizes ϕ12 and ϕ16 with foot mounting brackets and strokes of less than 10mm, the foot mounting bracket and sensor switch may interfere with each other, which could prevent 2 sensor switches from being mounted. For details, consult us.

Notes:
1. In the standard cylinder, a magnet for the sensor switch is not built-in.
2. Not available for the cylinder with magnet or the cylinder with bumper. Not available for bore sizes ϕ6, ϕ8, and ϕ10.
3. For the double acting type only. Not available for heat resistant specification, however. Not available for bore sizes ϕ6, ϕ8, and ϕ10.
4. For details of sensor switches, see p.1544.
5. Not available for bore sizes ϕ6～ϕ12.
6. Cannot be mounted on bore size ϕ40 with centering location (**-G**). Not available for bore sizes ϕ6, ϕ8, and ϕ10.
7. Not available for bore sizes ϕ6, ϕ8, and ϕ10. And cannot be mounted on the 5mm strokes of ϕ16 and ϕ25, and 10mm strokes of ϕ50, ϕ63, and ϕ80.
8. Bore sizes ϕ6, ϕ8, and ϕ10 are not non-ion specification.

## Additional Parts (To be ordered separately)

Foot mounting bracket (p.197)

Flange mounting bracket (p.198)

Mounting screws (p.209)

## Inner Construction and Major Parts

### ● Double acting type (CDA)

● $\phi$6～$\phi$10

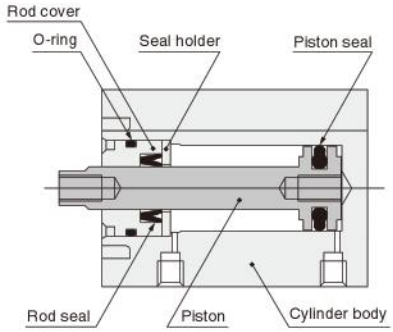


● $\phi$12～$\phi$40

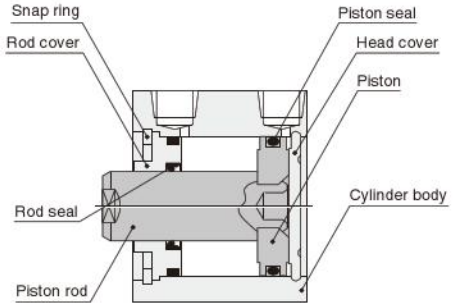


● $\phi$50～$\phi$100

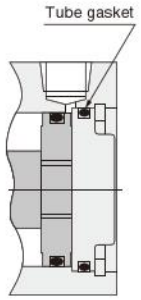


### ● Single acting push type (CSA)

● $\phi$6～$\phi$10

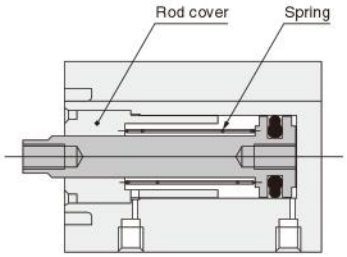


● $\phi$12～$\phi$50

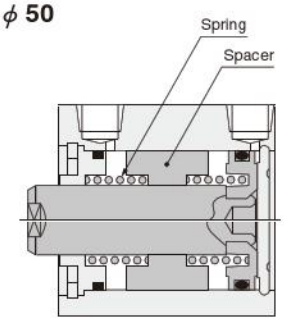


### ● Cylinder with magnet

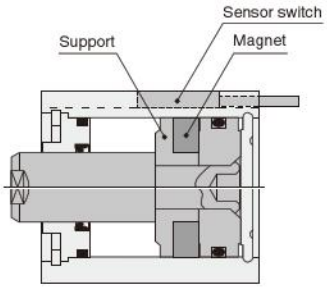


● The diagram is for $\phi$12～$\phi$100.

### ● Single acting pull type (CTA)

● $\phi$6～$\phi$10

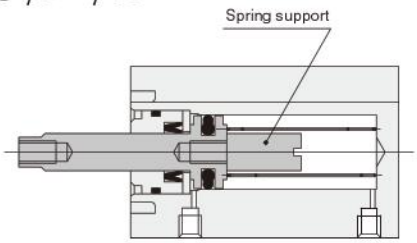


● $\phi$12～$\phi$50

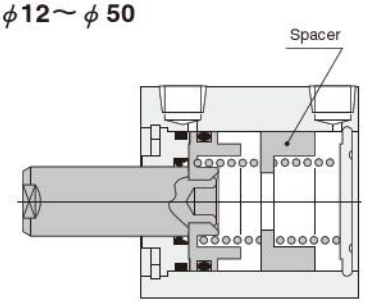


### ● With bumper

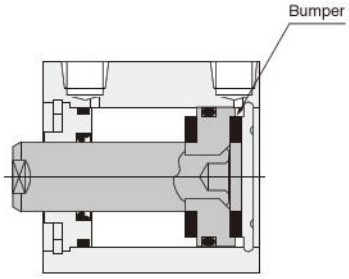


● The diagram is for $\phi$12～$\phi$100.

## Major Parts and Materials

| Parts \ Bore mm | $\phi$6 | $\phi$8 | $\phi$10 | $\phi$12 | $\phi$16 | $\phi$20 | $\phi$25 | $\phi$32 | $\phi$40 | $\phi$50 | $\phi$63 | $\phi$80 | $\phi$100 |
|---|---|---|---|---|---|---|---|---|---|---|---|---|---|
| Cylinder body | Aluminum alloy (anodized) | | | | | | | | | | | | |
| Piston | Stainless steel | | | Aluminum alloy (special rust prevention treatment) | | | | | | | | | |
| Piston rod | — | | | Stainless steel (chrome plated) | | | | Steel (chrome plated) | | | | | |
| Seal | Synthetic rubber (NBR) | | | | | | | | | | | | |
| Rod cover | Aluminum alloy (special wear-resistant treatment) | | | | | | | | | | | | |
| Head cover | — | | | Aluminum alloy (anodized) | | | | | | | | | |
| Snap ring | — | | | Steel (phosphate coating) | | | | | | | | | |
| Spring | Piano wire | | | | | | | | | | — | | |
| Spacer | — | | | Aluminum alloy (special rust prevention treatment) | | | | | | | — | | |
| Bumper | — | | | Synthetic rubber (NBR; urethane for $\phi$12 only) | | | | | | | | | |
| Magnet | Neodymium magnet | | | Plastic magnet | | | | | | | | | |
| Support | Copper alloy | | | Aluminum alloy (special rust prevention treatment) | | | | | | | | | |

## Seals

| Parts / Bore mm | Rod seal | Piston seal | Tube gasket | |
|---|---|---|---|---|
| | | | Rod side | Head side |
| $\phi$ 12 | MYR-6 | COP-12 | Y090260 | None |
| $\phi$ 16 | MYR-8 | COP-16 | Y090207 | None |
| $\phi$ 20 | MYR-10 | COP-20(MYA-16) | Y090216 | None |
| $\phi$ 25 | MYR-12 | COP-25(MYA-21) | Y090210 | None |
| $\phi$ 32 | MYR-16 | COP-32 | L090084 | None |
| $\phi$ 40 | MYR-16 | COP-40 | L090151 | None |
| $\phi$ 50 | MYR-20 | COP-50 | L090174 | L090106 |
| $\phi$ 63 | MYR-20 | COP-63 | L090180 | L090107 |
| $\phi$ 80 | PNY-25 | COP-80 | L090171 | L090108 |
| $\phi$ 100 | PNY-32 | COP-100 | L090172 | L090109 |

Note: Items in parentheses ( ) are for the single acting type.

# Mass

## ● Double acting type

g [oz.]

| Bore size mm [in.] | Zero stroke mass | Additional mass for each 1mm [0.0394in.] stroke | Additional mass of cylinder with bumper | Additional mass of cylinder with magnet | Mass of mounting bracket | | Additional mass of sensor switch Note | |
|---|---|---|---|---|---|---|---|---|
| | | | | | Foot bracket | Flange bracket | ZE□□□A | ZE□□□B |
| **6 [0.236]** | 9.2 [0.325] | 0.74 [0.0261] | — | 3.9 [0.138] | — | — | 15 [0.53] | 35 [1.23] |
| **8 [0.315]** | 13.1 [0.462] | 0.95 [0.0335] | — | 5.4 [0.190] | — | — | | |
| **10 [0.394]** | 18.1 [0.638] | 1.12 [0.0395] | — | 6.8 [0.240] | — | — | | |
| **12 [0.472]** | 20.59 [0.726] | 1.28 [0.0451] | 6.42 [0.226] | 6.59 [0.232] | 50 [1.76] | 55 [1.94] | | |
| **16 [0.630]** | 28.93 [1.020] | 1.62 [0.0571] | 8.08 [0.285] | 9.93 [0.350] | 62 [2.19] | 71 [2.50] | | |
| **20 [0.787]** | 46.71 [1.648] | 2.26 [0.0797] | 11.29 [0.398] | 25.71 [0.907] | 84 [2.96] | 101 [3.56] | | |
| **25 [0.984]** | 70.47 [2.486] | 3.11 [0.110] | 15.53 [0.548] | 37.47 [1.322] | 104 [3.67] | 160 [5.64] | | |
| **32 [1.260]** | 106.43 [3.754] | 4.11 [0.145] | 20.57 [0.726] | 52.43 [1.849] | 126 [4.44] | 186 [6.56] | | |
| **40 [1.575]** | 166.15 [5.861] | 4.77 [0.168] | 0 | 69.15 [2.439] | 160 [5.64] | 335 [11.82] | | |
| **50 [1.969]** | 271.69 [9.583] | 7.03 [0.248] | 0 | 108 [3.81] | 220 [7.76] | 447 [15.77] | | |
| **63 [2.480]** | 435.06 [15.35] | 8.69 [0.307] | 0 | 159 [5.61] | 300 [10.58] | 591 [20.85] | | |
| **80 [3.150]** | 861.44 [30.39] | 13.06 [0.461] | 0 | 245 [8.64] | 644 [22.72] | 1414 [49.88] | | |
| **100 [3.940]** | 1583.88 [55.87] | 18.61 [0.656] | 0 | 360 [12.70] | 1172 [41.34] | 2606 [91.92] | | |

Note: Sensor switch codes A and B show the lead wire lengths.
A: 1000mm [39in.] B: 3000mm [118in.]

## ● Single acting push type

g [oz.]

| Item | Basic mass Note1 | | | | | | | | Additional mass of cylinder with magnet | Mass of mounting bracket | | Additional mass of sensor switch Note2 | |
|---|---|---|---|---|---|---|---|---|---|---|---|---|---|
| Bore mm \ Stroke mm | 5 | 10 | 15 | 20 | 25 | 30 | 35 | 40 | | Foot bracket | Flange bracket | ZE□□□A | ZE□□□B |
| **6** | 20.8 [0.734] | 24.5 [0.864] | — | — | — | — | — | — | 3.9 [0.138] | — | — | 15 [0.53] | 35 [1.23] |
| **8** | 28.3 [0.998] | 33.1 [1.167] | — | — | — | — | — | — | 5.4 [0.190] | — | — | | |
| **10** | 36.2 [1.277] | 41.8 [1.474] | — | — | — | — | — | — | 6.8 [0.240] | — | — | | |
| **12** | 32.61 [1.157] | 39.22 [1.383] | 45.64 [1.610] | 67 [2.36] | 73.42 [2.590] | 79.83 [2.816] | — | — | 7.78 [0.274] | 50 [1.76] | 55 [1.94] | | |
| **16** | 46.6 [1.644] | 54.68 [1.929] | 62.75 [2.213] | 91 [3.21] | 99.08 [3.495] | 107.15 [3.780] | — | — | 10.32 [0.364] | 62 [2.19] | 71 [2.50] | | |
| **20** | 58.33 [2.057] | 69.62 [2.456] | 80.91 [2.854] | 121 [4.27] | 132.29 [4.666] | 143.58 [5.065] | — | — | 25.38 [0.895] | 84 [2.96] | 101 [3.56] | | |
| **25** | 86.37 [3.047] | 101.9 [3.594] | 117.43 [4.142] | 173 [6.10] | 188.53 [6.650] | 204.06 [7.198] | — | — | 39.1 [1.379] | 104 [3.67] | 160 [5.64] | | |
| **32** | 128.85 [4.545] | 149.42 [5.271] | 169.99 [5.996] | 276 [9.74] | 296.57 [10.461] | 317.14 [11.187] | — | — | 50.58 [1.784] | 126 [4.44] | 186 [6.56] | | |
| **40** | 190.73 [6.728] | 214.58 [7.569] | 238.43 [8.410] | 373 [13.16] | 396.85 [13.998] | 420.7 [14.84] | — | — | 69.42 [2.449] | 160 [5.64] | 335 [11.82] | | |
| **50** | — | 343.95 [12.132] | 379.11 [13.372] | 414.26 [14.61] | 582 [20.53] | 617.16 [21.769] | 652.31 [23.009] | 687.47 [24.249] | 106.05 [3.741] | 220 [7.76] | 447 [15.77] | | |

Notes: 1. The above table is for the standard strokes.
2. Sensor switch codes A and B show the lead wire lengths.
A: 1000mm [39in.] B: 3000mm [118in.]

## ● Single acting pull type

g [oz.]

| Item | Basic mass Note1 | | | | | | | | Additional mass of cylinder with magnet | Mass of mounting bracket | | Additional mass of sensor switch Note2 | |
|---|---|---|---|---|---|---|---|---|---|---|---|---|---|
| Bore mm \ Stroke mm | 5 | 10 | 15 | 20 | 25 | 30 | 35 | 40 | | Foot bracket | Flange bracket | ZE□□□A | ZE□□□B |
| **6** | 20.5 [0.723] | 24.2 [0.854] | — | — | — | — | — | — | 3.9 [0.138] | — | — | 15 [0.53] | 35 [1.23] |
| **8** | 27.6 [0.974] | 32.4 [1.143] | — | — | — | — | — | — | 5.5 [0.194] | — | — | | |
| **10** | 35.1 [1.238] | 40.7 [1.436] | — | — | — | — | — | — | 6.7 [0.236] | — | — | | |
| **12** | 32.03 [1.130] | 38.44 [1.356] | 44.86 [1.582] | 64 [2.26] | 70.42 [2.484] | 76.83 [2.710] | — | — | 8.56 [0.302] | 50 [1.76] | 55 [1.94] | | |
| **16** | 45.55 [1.607] | 53.63 [1.892] | 61.7 [2.176] | 86 [3.03] | 94.08 [3.319] | 102.15 [3.603] | — | — | 11.37 [0.401] | 62 [2.19] | 71 [2.50] | | |
| **20** | 68.4 [2.413] | 79.69 [2.811] | 90.98 [3.209] | 125 [4.41] | 136.29 [4.807] | 147.58 [5.206] | — | — | 26.31 [0.928] | 84 [2.96] | 101 [3.56] | | |
| **25** | 100.02 [3.528] | 115.55 [4.076] | 131.08 [4.623] | 178 [6.28] | 193.53 [6.826] | 209.06 [7.374] | — | — | 38.45 [1.356] | 104 [3.67] | 160 [5.64] | | |
| **32** | 144.73 [5.105] | 165.3 [5.831] | 185.87 [6.556] | 269 [9.49] | 289.57 [10.214] | 310.14 [10.940] | — | — | 51.71 [1.824] | 126 [4.44] | 186 [6.56] | | |
| **40** | 215.24 [7.592] | 239.09 [8.434] | 262.94 [9.275] | 374 [13.19] | 397.85 [14.034] | 421.7 [14.875] | — | — | 67.91 [2.395] | 160 [5.64] | 335 [11.82] | | |
| **50** | — | 378.94 [13.366] | 414.1 [14.61] | 449.25 [15.847] | 580 [20.46] | 615.16 [21.699] | 650.31 [22.939] | 685.47 [24.179] | 70.06 [2.471] | 220 [7.76] | 447 [15.77] | | |

Notes: 1. The above table is for the standard strokes.
2. Sensor switch codes A and B show the lead wire lengths.
A: 1000mm [39in.] B: 3000mm [118in.]

Calculation example: For the mass of a double acting type cylinder with magnet, bore size of 25mm, stroke of 30mm, and with 2 sensor switches (**ZE135A**)
70.47+(3.11×30)+37.47+(15×2)=231.24g [8.157oz.]

# Dimensions of Standard Cylinder Double Acting Type (mm)

## ●φ6～φ25

CDA Bore size

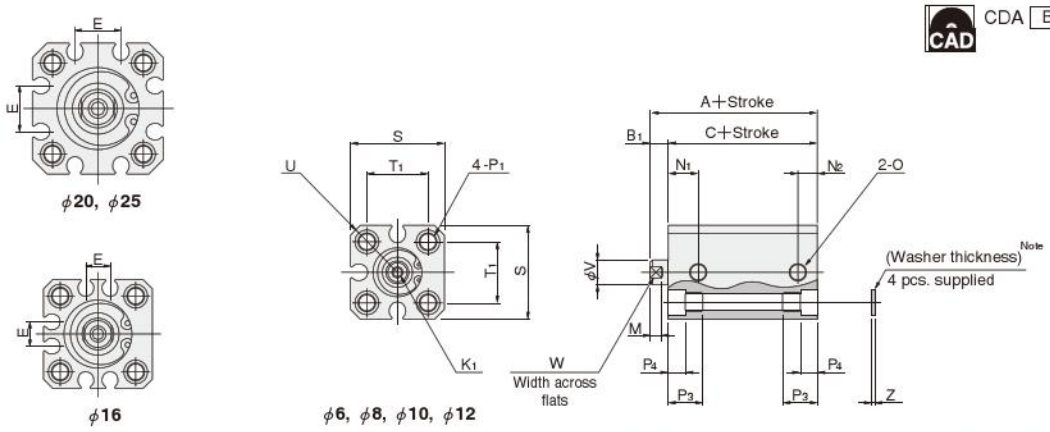


Note: Bore sizes φ6, φ8, and φ10 are not available with washers.
● The drawing is for φ12.

## ●φ32～φ100

CDA Bore size

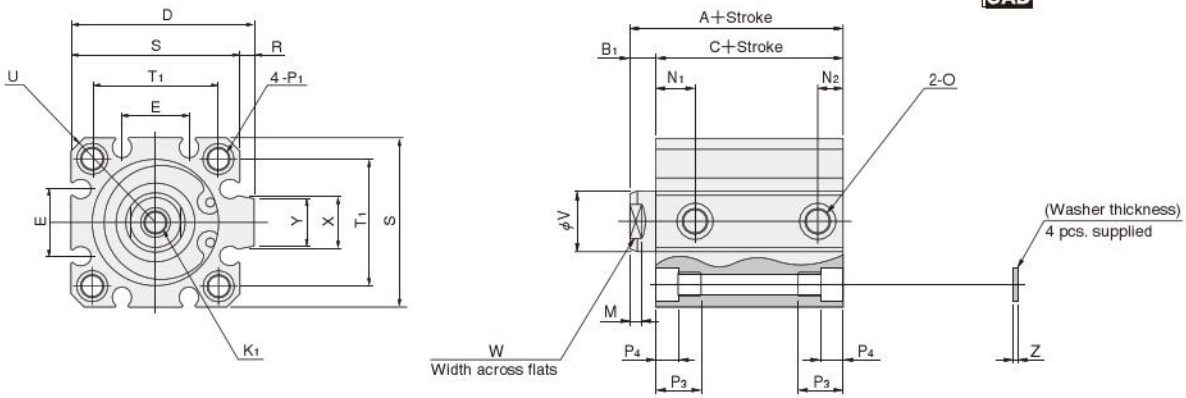


| Type / Bore mm [in.] / Code | Standard cylinder (CDA) | | | Cylinder with magnet (CDAS) | | | Standard cylinder with bumper (CDA-R) | | | Cylinder with magnet and bumper (CDAS-R) | | | D | E | K1 | M | N1 | N2 |
|---|---|---|---|---|---|---|---|---|---|---|---|---|---|---|---|---|---|---|
| | A | B1 | C | A | B1 | C | A | B1 | C | A | B1 | C | | | | | | |
| 6 [0.236] | 19 | 5 | 14 | 24 | 5 | 19 | — | — | — | — | — | — | — | — | M2.5X0.45 Depth5 | 3 | 6.5 | 3.5 |
| 8 [0.315] | 20 | 5 | 15 | 25 | 5 | 20 | — | — | — | — | — | — | — | — | M3X0.5 Depth5 | 3 | 7.5 | 3.5 |
| 10 [0.394] | 21 | 5 | 16 | 26 | 5 | 21 | — | — | — | — | — | — | — | — | M3X0.5 Depth5 | 3 | 8 | 4 |
| 12 [0.472] | 22 | 5 | 17 | 27 | 5 | 22 | 27 | 5 | 22 | 32 | 5 | 27 | — | — | M3X0.5 Depth6 | 3.5 | 8 | 5 |
| 16 [0.630] | 22.5 | 5.5 | 17 | 27.5 | 5.5 | 22 | 27.5 | 5.5 | 22 | 32.5 | 5.5 | 27 | — | 6.2 | M4X0.7 Depth8 | 3.5 | 8 | 5 |
| 20 [0.787] | 25 | 5.5 | 19.5 | 35 | 5.5 | 29.5 | 30 | 5.5 | 24.5 | 40 | 5.5 | 34.5 | — | 12.2 | M5X0.8 Depth10 | 4.5 | 9.5 | 5 |
| 25 [0.984] | 27 | 6 | 21 | 37 | 6 | 31 | 32 | 6 | 26 | 42 | 6 | 36 | — | 12.2 | M6X1 Depth10 | 5 | 10.5 | 5 |
| 32 [1.260] | 30 | 7 | 23 | 40 | 7 | 33 | 35 | 7 | 28 | 40 | 7 | 33 | 48.5 | 18.2 | M8X1.25 Depth12 | 6 | 9.5 | 7.5〔6〕 |
| 40 [1.575] | 33 | 7 | 26 | 43 | 7 | 36 | 33 | 7 | 26 | 43 | 7 | 36 | 56.5 | 18.2 | M8X1.25 Depth12 | 6 | 10.5 | 7.5 |
| 50 [1.969] | 37 | 9 | 28 | 47 | 9 | 38 | 37 | 9 | 28 | 47 | 9 | 38 | 70 | 24.8 | M10X1.5 Depth15 | 7 | 11 | 9.5 |
| 63 [2.480] | 41 | 9 | 32 | 51 | 9 | 42 | 41 | 9 | 32 | 51 | 9 | 42 | 83 | 26.8 | M10X1.5 Depth15 | 7 | 12.5 | 11 |
| 80 [3.150] | 52 | 11 | 41 | 62 | 11 | 51 | 52 | 11 | 41 | 62 | 11 | 51 | 102 | 32.8 | M14X2 Depth20 | 9 | 18 | 12 |
| 100 [3.940] | 63 | 12 | 51 | 73 | 12 | 61 | 63 | 12 | 51 | 73 | 12 | 61 | 122 | 32.8 | M18X2.5 Depth20 | 9 | 22.5 | 16.5 |

| Bore mm [in.] / Type | O | P1 | P3 | P4 | R | S | T1 | U | V | W | X | Y | Z | Appropriate through bolt |
|---|---|---|---|---|---|---|---|---|---|---|---|---|---|---|
| 6 [0.236] | M3X0.5 | φ3.3 (Thru hole) C'bore φ6 (Both sides) and M4X0.7 (Both sides) | 9.5 | 3.5 | — | 19 | 11 | R12 | 4 | 3.5 | — | — | — | M3 |
| 8 [0.315] | M3X0.5 | φ3.3 (Thru hole) C'bore φ6.2 (Both sides) and M4X0.7 (Both sides) | 9.5 | 3.5 | — | 21 | 13 | R13.5 | 5 | 4 | — | — | — | M3 |
| 10 [0.394] | M3X0.5 | φ3.3 (Thru hole) C'bore φ6.2 (Both sides) and M4X0.7 (Both sides) | 9.5 | 3.5 | — | 23 | 15 | R15 | 5 | 4 | — | — | — | M3 |
| 12 [0.472] | M5X0.8 | φ4.3 (Thru hole) C'bore φ6.5 (Both sides) and M5X0.8 (Both sides) | 9.5 | 4.5 | — | 25 | 16.3 | R16 | 6 | 5 | — | — | 1 | M3 |
| 16 [0.630] | M5X0.8 | φ4.3 (Thru hole) C'bore φ6.5 (Both sides) and M5X0.8 (Both sides) | 9.5 | 4.5 | — | 29 | 19.8 | R19 | 8 | 6 | — | — | 1 | M3 |
| 20 [0.787] | M5X0.8 | φ4.3 (Thru hole) C'bore φ6.5 (Both sides) and M5X0.8 (Both sides) | 9.5 | 4.5 | — | 34 | 24 | R22 | 10 | 8 | — | — | 1 | M3 |
| 25 [0.984] | M5X0.8 | φ5.1 (Thru hole) C'bore φ8 (Both sides) and M6X1 (Both sides) | 11.5 | 5.5 | — | 40 | 28 | R25 | 12 | 10 | — | — | 1 | M4 |
| 32 [1.260] | Rc1/8 | φ5.1 (Thru hole) C'bore φ8 (Both sides) and M6X1 (Both sides) | 11.5 | 5.5 | 4.5 | 44 | 34 | R29.5 | 16 | 14 | 15 | 13.6 | 1 | M4 |
| 40 [1.575] | Rc1/8 | φ6.9 (Thru hole) C'bore φ9.5 (Both sides) and M8X1.25 (Both sides) | 15.5 | 7.5 | 4.5 | 52 | 40 | R35 | 16 | 14 | 15 | 13.6 | 1.6 | M5 |
| 50 [1.969] | Rc1/4 | φ6.9 (Thru hole) C'bore φ11 (Both sides) and M8X1.25 (Both sides) | 16.5 | 8.5 | 8 | 62 | 48 | R41 | 20 | 17 | 21.6 | 19 | 1.6 | M6 |
| 63 [2.480] | Rc1/4 | φ6.9 (Thru hole) C'bore φ11 (Both sides) and M8X1.25 (Both sides) | 16.5 | 8.5 | 8 | 75 | 60 | R50 | 20 | 17 | 21.6 | 19 | 1.6 | M6 |
| 80 [3.150] | Rc3/8 | φ10.5 (Thru hole) C'bore φ14 (Both sides) and M12X1.75 (Both sides) | 22.5 | 10.5 | 8 | 94 | 74 | R62 | 25 | 22 | 27.6 | 25 | 1.6 | M8 |
| 100 [3.940] | Rc3/8 | φ12.3 (Thru hole) C'bore φ17.5 (Both sides) and M14X2 (Both sides) | 27 | 13 | 8 | 114 | 90 | R75 | 32 | 27 | 27.6 | 25 | 2 | M10 |

Note: Figure in parentheses 〔 〕 is for the standard cylinder (**CDA**) with 5mm stroke.
Remark: If using a through bolt to directly mount the body in place, see p.205.

## Dimensions of Standard Cylinder Single Acting Push Type (mm)

### ●φ6～φ25

CSA Bore size

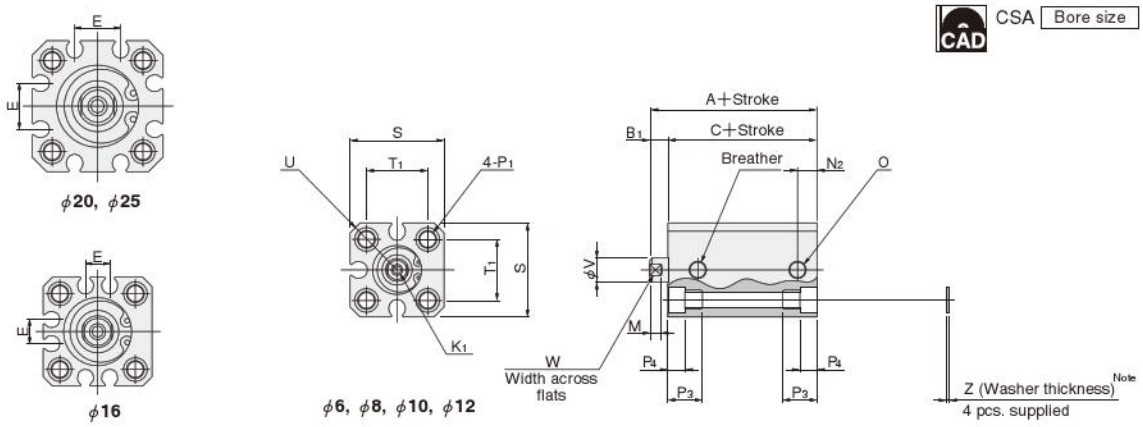


Note: Bore sizes φ6, φ8, and φ10 are not available with washers.
● The drawing is for φ12.

### ●φ32～φ50

CSA Bore size

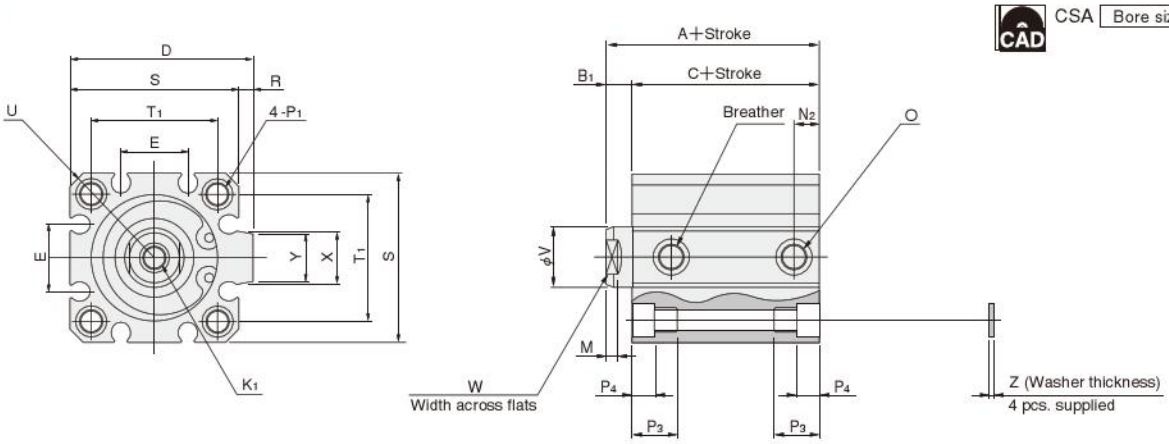


| Type / Stroke / Bore mm [in.] Code | Standard cylinder (CSA) | | | | | | Cylinder with magnet (CSAS) | | | | | | D | E | K1 | M | N2 | O |
|---|---|---|---|---|---|---|---|---|---|---|---|---|---|---|---|---|---|---|
| | 5～15 (φ50: 10～20) | | | 16～30 (φ50: 21～40) | | | 5～15 (φ50: 10～20) | | | 16～30 (φ50: 21～40) | | | | | | | | |
| | A | B1 | C | A | B1 | C | A | B1 | C | A | B1 | C | | | | | | |
| 6 [0.236] | 29 | 5 | 24 | — | — | — | 34 | 5 | 29 | — | — | — | — | — | M2.5X0.45 Depth5 | 3 | 3.5 | M3X0.5 |
| 8 [0.315] | 30 | 5 | 25 | — | — | — | 35 | 5 | 30 | — | — | — | — | — | M3X0.5 Depth5 | 3 | 3.5 | M3X0.5 |
| 10 [0.394] | 31 | 5 | 26 | — | — | — | 36 | 5 | 31 | — | — | — | — | — | M3X0.5 Depth5 | 3 | 4 | M3X0.5 |
| 12 [0.472] | 27 | 5 | 22 | 37 | 5 | 32 | 32 | 5 | 27 | 42 | 5 | 37 | — | — | M3X0.5 Depth6 | 3.5 | 5 | M5X0.8 |
| 16 [0.630] | 27.5 | 5.5 | 22 | 37.5 | 5.5 | 32 | 32.5 | 5.5 | 27 | 42.5 | 5.5 | 37 | — | 6.2 | M4X0.7 Depth8 | 3.5 | 5 | M5X0.8 |
| 20 [0.787] | 25 | 5.5 | 19.5 | 35 | 5.5 | 29.5 | 35 | 5.5 | 29.5 | 45 | 5.5 | 39.5 | — | 12.2 | M5X0.8 Depth10 | 4.5 | 5 | M5X0.8 |
| 25 [0.984] | 27 | 6 | 21 | 37 | 6 | 31 | 37 | 6 | 31 | 47 | 6 | 41 | — | 12.2 | M6X1 Depth10 | 5 | 5 | M5X0.8 |
| 32 [1.260] | 30 | 7 | 23 | 45 | 7 | 38 | 40 | 7 | 33 | 55 | 7 | 48 | 48.5 | 18.2 | M8X1.25 Depth12 | 6 | 7.5〔6〕 | Rc1/8 |
| 40 [1.575] | 33 | 7 | 26 | 48 | 7 | 41 | 43 | 7 | 36 | 58 | 7 | 51 | 56.5 | 18.2 | M8X1.25 Depth12 | 6 | 7.5 | Rc1/8 |
| 50 [1.969] | 37 | 9 | 28 | 52 | 9 | 43 | 47 | 9 | 38 | 62 | 9 | 53 | 70 | 24.8 | M10X1.5 Depth15 | 7 | 9.5 | Rc1/4 |

| Bore mm [in.] Code | P1 | P3 | P4 | R | S | T1 | U | V | W | X | Y | Z | Appropriate through bolt※ |
|---|---|---|---|---|---|---|---|---|---|---|---|---|---|
| 6 [0.236] | φ3.3 (Thru hole) C'bore φ6 (Both sides) and M4X0.7 (Both sides) | 9.5 | 3.5 | — | 19 | 11 | R12 | 4 | 3.5 | — | — | — | M3 |
| 8 [0.315] | φ3.3 (Thru hole) C'bore φ6.2 (Both sides) and M4X0.7 (Both sides) | 9.5 | 3.5 | — | 21 | 13 | R13.5 | 5 | 4 | — | — | — | M3 |
| 10 [0.394] | φ3.3 (Thru hole) C'bore φ6.2 (Both sides) and M4X0.7 (Both sides) | 9.5 | 3.5 | — | 23 | 15 | R15 | 5 | 4 | — | — | — | M3 |
| 12 [0.472] | φ4.3 (Thru hole) C'bore φ6.5 (Both sides) and M5X0.8 (Both sides) | 9.5 | 4.5 | — | 25 | 16.3 | R16 | 6 | 5 | — | — | 1 | M3 |
| 16 [0.630] | φ4.3 (Thru hole) C'bore φ6.5 (Both sides) and M5X0.8 (Both sides) | 9.5 | 4.5 | — | 29 | 19.8 | R19 | 8 | 6 | — | — | 1 | M3 |
| 20 [0.787] | φ4.3 (Thru hole) C'bore φ6.5 (Both sides) and M5X0.8 (Both sides) | 9.5 | 4.5 | — | 34 | 24 | R22 | 10 | 8 | — | — | 1 | M3 |
| 25 [0.984] | φ5.1 (Thru hole) C'bore φ8 (Both sides) and M6X1 (Both sides) | 11.5 | 5.5 | — | 40 | 28 | R25 | 12 | 10 | — | — | 1 | M4 |
| 32 [1.260] | φ5.1 (Thru hole) C'bore φ8 (Both sides) and M6X1 (Both sides) | 11.5 | 5.5 | 4.5 | 44 | 34 | R29.5 | 16 | 14 | 15 | 13.6 | 1 | M4 |
| 40 [1.575] | φ6.9 (Thru hole) C'bore φ9.5 (Both sides) and M8X1.25 (Both sides) | 15.5 | 7.5 | 4.5 | 52 | 40 | R35 | 16 | 14 | 15 | 13.6 | 1.6 | M5 |
| 50 [1.969] | φ6.9 (Thru hole) C'bore φ11 (Both sides) and M8X1.25 (Both sides) | 16.5 | 8.5 | 8 | 62 | 48 | R41 | 20 | 17 | 21.6 | 19 | 1.6 | M6 |

Note: Figure in parentheses 〔 〕 is for the standard cylinder (**CSA**) with 5mm stroke.
Remark: If using a through bolt to directly mount the body in place, see p.205.
※Some types of mounting screws are available (to be ordered separately). See p.209.

## Dimensions of Standard Cylinder Single Acting Pull Type (mm)

### ●φ6～φ25

CTA Bore size

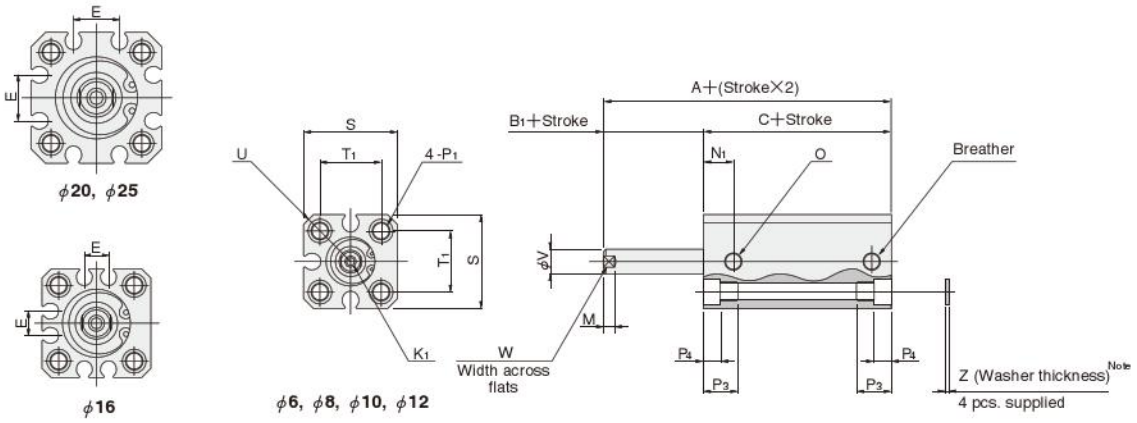


Note: Bore sizes φ6, φ8, and φ10 are not available with washers.
● The drawing is for φ12.

### ●φ32～φ50

CTA Bore size

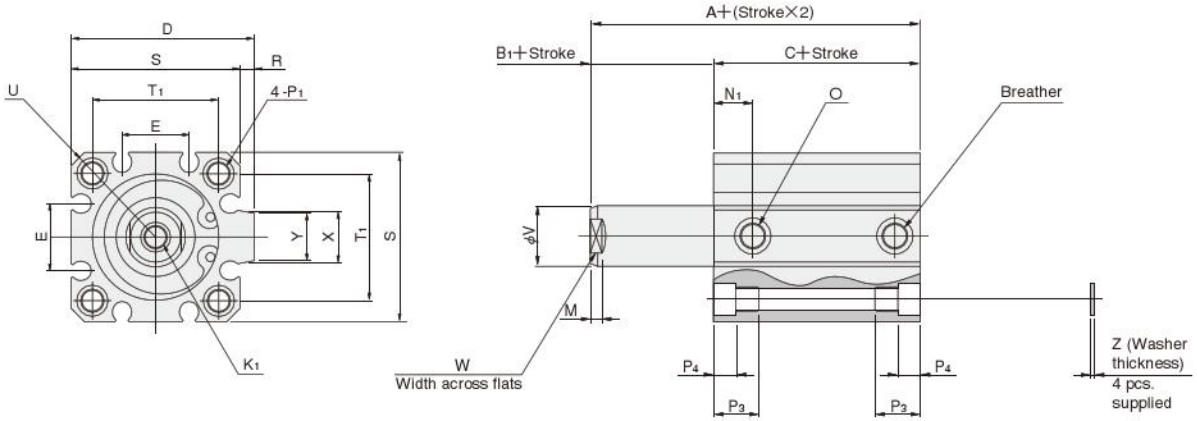


| Type / Stroke / Bore mm [in.] Code | Standard cylinder (CTA) | | | | | | Cylinder with magnet (CTAS) | | | | | | D | E | K1 | M | N1 | O |
|---|---|---|---|---|---|---|---|---|---|---|---|---|---|---|---|---|---|---|
| | 5～15 (φ50: 10～20)※1 | | | 16～30 (φ50: 21～40) | | | 5～15 (φ50: 10～20)※1 | | | 16～30 (φ50: 21～40) | | | | | | | | |
| | A | B1 | C | A | B1 | C | A | B1 | C | A | B1 | C | | | | | | |
| 6 [0.236] | 29 | 5 | 24 | — | — | — | 34 | 5 | 29 | — | — | — | — | — | M2.5×0.45 Depth5 | 3 | 6.5 | M3×0.5 |
| 8 [0.315] | 30 | 5 | 25 | — | — | — | 35 | 5 | 30 | — | — | — | — | — | M3×0.5 Depth5 | 3 | 7.5 | M3×0.5 |
| 10 [0.394] | 31 | 5 | 26 | — | — | — | 36 | 5 | 31 | — | — | — | — | — | M3×0.5 Depth5 | 3 | 8 | M3×0.5 |
| 12 [0.472] | 27 | 5 | 22 | 37 | 5 | 32 | 32 | 5 | 27 | 42 | 5 | 37 | — | — | M3×0.5 Depth6 | 3.5 | 8 | M5×0.8 |
| 16 [0.630] | 27.5 | 5.5 | 22 | 37.5 | 5.5 | 32 | 32.5 | 5.5 | 27 | 42.5 | 5.5 | 37 | — | 6.2 | M4×0.7 Depth8 | 3.5 | 8 | M5×0.8 |
| 20 [0.787] | 30 | 5.5 | 24.5 | 40 | 5.5 | 34.5 | 40 | 5.5 | 34.5 | 50 | 5.5 | 44.5 | — | 12.2 | M5×0.8 Depth10 | 4.5 | 9.5 | M5×0.8 |
| 25 [0.984] | 32 | 6 | 26 | 42 | 6 | 36 | 42 | 6 | 36 | 52 | 6 | 46 | — | 12.2 | M6×1 Depth10 | 5 | 10.5 | M5×0.8 |
| 32 [1.260] | 35 | 7 | 28 | 50 | 7 | 43 | 45 | 7 | 38 | 60 | 7 | 53 | 48.5 | 18.2 | M8×1.25 Depth12 | 6 | 9.5 | Rc1/8 |
| 40 [1.575] | 38 | 7 | 31 | 53 | 7 | 46 | 48 | 7 | 41 | 63 | 7 | 56 | 56.5 | 18.2 | M8×1.25 Depth12 | 6 | 10.5 | Rc1/8 |
| 50 [1.969] | 37 | 9 | 28 | 52 | 9 | 43 | 47 | 9 | 38 | 62 | 9 | 53 | 70 | 24.8 | M10×1.5 Depth15 | 7 | 11 | Rc1/4 |

| Code / Bore mm [in.] | P1 | P3 | P4 | R | S | T1 | U | V | W | X | Y | Z | Appropriate through bolt※2 |
|---|---|---|---|---|---|---|---|---|---|---|---|---|---|
| 6 [0.236] | φ3.3 (Thru hole) C'bore φ6 (Both sides) and M4×0.7 (Both sides) | 9.5 | 3.5 | — | 19 | 11 | R12 | 4 | 3.5 | — | — | — | M3 |
| 8 [0.315] | φ3.3 (Thru hole) C'bore φ6.2 (Both sides) and M4×0.7 (Both sides) | 9.5 | 3.5 | — | 21 | 13 | R13.5 | 5 | 4 | — | — | — | M3 |
| 10 [0.394] | φ3.3 (Thru hole) C'bore φ6.2 (Both sides) and M4×0.7 (Both sides) | 9.5 | 3.5 | — | 23 | 15 | R15 | 5 | 4 | — | — | — | M3 |
| 12 [0.472] | φ4.3 (Thru hole) C'bore φ6.5 (Both sides) and M5×0.8 (Both sides) | 9.5 | 4.5 | — | 25 | 16.3 | R16 | 6 | 5 | — | — | 1 | M3 |
| 16 [0.630] | φ4.3 (Thru hole) C'bore φ6.5 (Both sides) and M5×0.8 (Both sides) | 9.5 | 4.5 | — | 29 | 19.8 | R19 | 8 | 6 | — | — | 1 | M3 |
| 20 [0.787] | φ4.3 (Thru hole) C'bore φ6.5 (Both sides) and M5×0.8 (Both sides) | 9.5 | 4.5 | — | 34 | 24 | R22 | 10 | 8 | — | — | 1 | M3 |
| 25 [0.984] | φ5.1 (Thru hole) C'bore φ8 (Both sides) and M6×1 (Both sides) | 11.5 | 5.5 | — | 40 | 28 | R25 | 12 | 10 | — | — | 1 | M4 |
| 32 [1.260] | φ5.1 (Thru hole) C'bore φ8 (Both sides) and M6×1 (Both sides) | 11.5 | 5.5 | 4.5 | 44 | 34 | R29.5 | 16 | 14 | 15 | 13.6 | 1 | M4 |
| 40 [1.575] | φ6.9 (Thru hole) C'bore φ9.5 (Both sides) and M8×1.25 (Both sides) | 15.5 | 7.5 | 4.5 | 52 | 40 | R35 | 16 | 14 | 15 | 13.6 | 1.6 | M5 |
| 50 [1.969] | φ6.9 (Thru hole) C'bore φ11 (Both sides) and M8×1.25 (Both sides) | 16.5 | 8.5 | 8 | 62 | 48 | R41 | 20 | 17 | 21.6 | 19 | 1.6 | M6 |

Remark: If using a through bolt to directly mount the body in place, see p.205.
※ 1. Bore sizes φ6, φ8, and φ10 are 5～10 strokes.
2. Some types of mounting screws are available (to be ordered separately). See p.209.

## Dimensions of Male Rod End Thread Specification (mm)

CAD Available in the file of each cylinder body.

### ● Double acting type, Single acting push type, Single acting pull type

● $\phi$6～$\phi$25

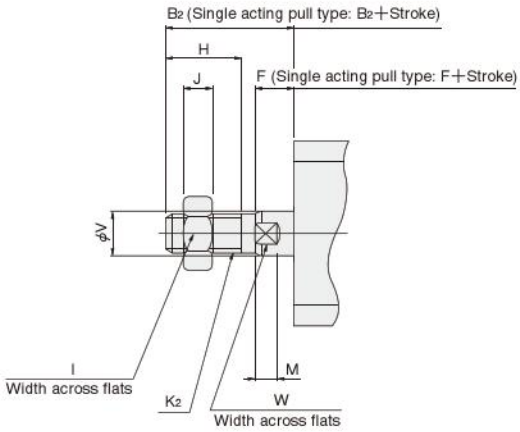


● $\phi$32～$\phi$100
(Single acting type available up to $\phi$50)

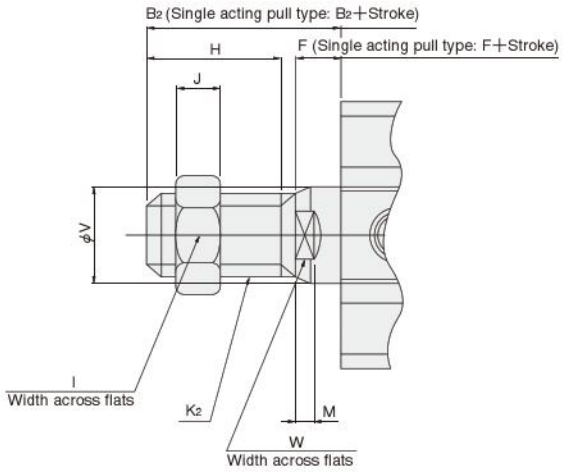


| Bore mm [in.] \ Code | B2 | F | H | I | J | K2 | M | V | W |
|---|---|---|---|---|---|---|---|---|---|
| **6 [0.236]** | 15 | 5 | 8 | 5.5 | 1.8 | M3×0.5 | 3 | 4 | 3.5 |
| **8 [0.315]** | 15 | 5 | 8 | 7 | 2.4 | M4×0.7 | 3 | 5 | 4 |
| **10 [0.394]** | 15 | 5 | 8 | 7 | 2.4 | M4×0.7 | 3 | 5 | 4 |
| **12 [0.472]** | 17 | 5 | 10 | 8 | 4 | M5×0.8 | 3.5 | 6 | 5 |
| **16 [0.630]** | 20.5 | 5.5 | 13 | 10 | 5 | M6×1 | 3.5 | 8 | 6 |
| **20 [0.787]** | 22.5 | 5.5 | 15 | 12 | 5 | M8×1 | 4.5 | 10 | 8 |
| **25 [0.984]** | 24 | 6 | 15 | 14 | 6 | M10×1.25 | 5 | 12 | 10 |
| **32 [1.260]** | 35 | 7 | 25 | 19 | 8 | M14×1.5 | 6 | 16 | 14 |
| **40 [1.575]** | 35 | 7 | 25 | 19 | 8 | M14×1.5 | 6 | 16 | 14 |
| **50 [1.969]** | 37 | 9 | 25 | 27 | 11 | M18×1.5 | 7 | 20 | 17 |
| **63 [2.480]** | 37 | 9 | 25 | 27 | 11 | M18×1.5 | 7 | 20 | 17 |
| **80 [3.150]** | 44 | 11 | 30 | 32 | 13 | M22×1.5 | 9 | 25 | 22 |
| **100 [3.940]** | 50 | 12 | 35 | 36 | 14 | M26×1.5 | 9 | 32 | 27 |

Remark: Cylinder joints and cylinder rod ends are available for mounting with the rod end male thread specification. For details, see p.1568.

## Dimensions of Centering Location (mm)

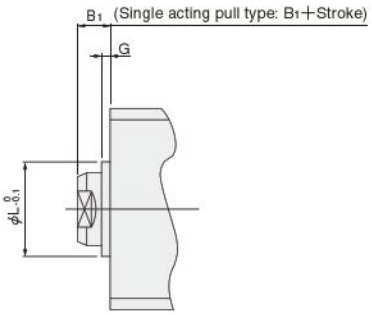


| Bore mm [in.] \ Code | B1 | G | L |
|---|---|---|---|
| **16 [0.630]** | 5.5 | 1.5 | 9.4 |
| **20 [0.787]** | 5.5 | 1.5 | 12 |
| **25 [0.984]** | 6 | 2 | 15 |
| **32 [1.260]** | 7 | 2 | 21 |
| **40 [1.575]** | 7 | 2 | 29 |
| **50 [1.969]** | 9 | 2 | 38 |
| **63 [2.480]** | 9 | 2 | 40 |
| **80 [3.150]** | 11 | 2 | 45 |
| **100 [3.940]** | 12 | 2 | 55 |

●Not available for bore sizes $\phi$6, $\phi$8, $\phi$10 and $\phi$12.

# JIG CYLINDERS C SERIES NON-ROTATING CYLINDERS

## Double Acting Type

## Symbol

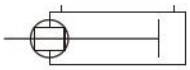

## Specifications

| Item / Bore size mm [in.] | 6 [0.236] | 8 [0.315] | 10 [0.394] |
|---|---|---|---|
| Operation type | Double acting type | | |
| Media | Air | | |
| Operating pressure range MPa [psi.] | 0.15～0.9 [22～131] | | |
| Proof pressure MPa[psi.] | 1.35 [196] | | |
| Operating temperature range °C [°F] | 0～60 [32～140] | | |
| Operating speed range mm/s [in./sec.] | 50～500 [2.0～19.7] | | |
| Cushion | — | | |
| Lubrication | Not required (If lubrication is required, use Turbine Oil Class 1 [**ISO VG32**] or equivalent.) | | |
| Non-rotating accuracy | ±2° | ±1.6° | ±1.4° |
| Port size | M3×0.5 | | |

Remark: For Handling Instructions and Precautions, see p.205.

## Bore Size and Stroke

For non-standard strokes, see p.206.

mm

| Bore size | Standard strokes | |
|---|---|---|
| | Standard cylinder | Cylinder with magnet |
| **6** | 5, 10 | 5, 10 |
| **8** | | |
| **10** | | |

Remark: Stroke tolerance $^{+1}_{0}$ [ $^{+0.039}_{0}$in. ]

## Order Codes for Non-rotating Cylinders

**Operation type**

**DA :** Double acting type

**Rod end specification**

Female thread

Male thread

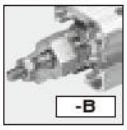


**Sensor switch type** Note2
(For cylinder with magnet)

**Blank:**
No sensor switch

**-ZE135 :** With ZE135
- 2-lead wire Solid state type
- With indicator lamp
- DC10～28V
- Horizontal lead wire

**-ZE235 :** With ZE235
- 2-lead wire Solid state type
- With indicator lamp
- DC10～28V
- Vertical lead wire

**-ZE155 :** With ZE155
- 3-lead wire Solid state type
- With indicator lamp
- DC4.5～28V
- Horizontal lead wire

**-ZE255 :** With ZE255
- 3-lead wire Solid state type
- With indicator lamp
- DC4.5～28V
- Vertical lead wire

**Lead wire length**

**A :** 1000mm [39in.]
**B :** 3000mm [118in.]

**Number of sensor switches**
(For cylinder with magnet)
**Blank:**
No sensor switch

**1 :** With 1 sensor switch
**2 :** With 2 sensor switches

**Non-rotating cylinder**

**Cylinder specification**

**Blank :** Standard cylinder Note1
**S :** Cylinder with magnet

| Basic type | | | | Bore size × Stroke | | | | |
|---|---|---|---|---|---|---|---|---|
| C | DA | L | S | × | -B | -ZE135<br>-ZE155<br>-ZE235<br>-ZE255 | A<br>B | 1<br>2<br>⋮<br>n |

- See table for bore size and stroke.
- For information regarding the cylinder joint and cylinder rod end for male thread, see p.1568.
- For the order codes of sensor switches only, see p.199.

Notes: 1. In the standard cylinder, a magnet for the sensor switch is not built-in.
2. For details of sensor switches, see p.1544.

## Inner Construction and Major Parts

### ● Double acting type

### ● $\phi$6～$\phi$10

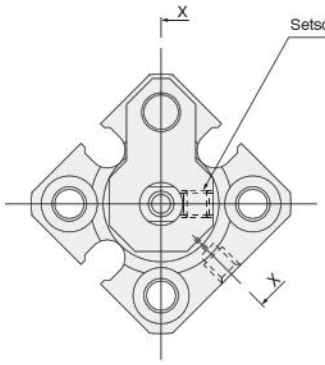


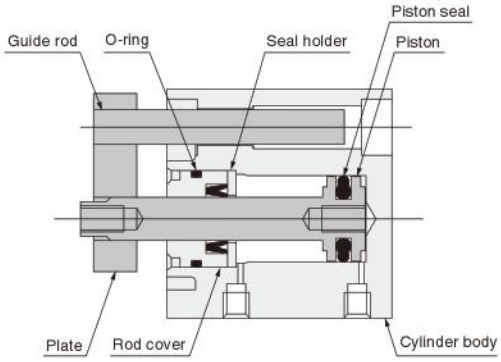


X-X cross section

### ● Cylinder with magnet

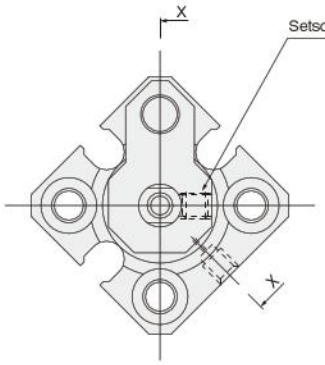


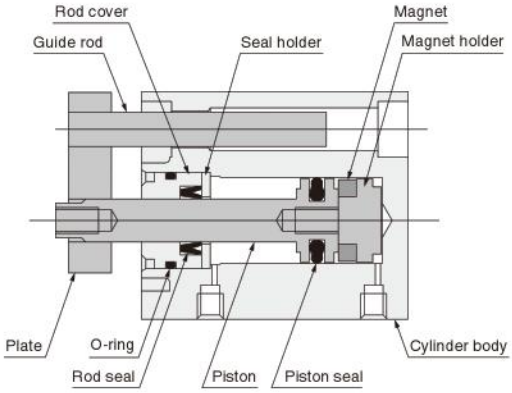


X-X cross section

## Major Parts and Materials

| Parts \ Bore mm | $\phi$6～$\phi$10 |
|---|---|
| Cylinder body | Aluminum alloy (anodized) |
| Piston | Stainless steel |
| Seal | Synthetic rubber (NBR) |
| Seal holder | Copper alloy |
| Rod cover | Aluminum alloy (special wear resistant treatment) |
| Plate | Copper alloy (nickel plated) |
| Setscrew | Steel |
| Magnet | Neodymium magnet |
| Magnet holder | Copper alloy |
| Guide rod | Stainless steel |

## Mass

g [oz.]

| Bore size mm [in.] | Basic mass Note1 | | Mass with sensor | | Additional mass of sensor switch Note2 | |
|---|---|---|---|---|---|---|
| | 5mm stroke | 10mm stroke | 5mm stroke | 10mm stroke | ZE□□□A | ZE□□□B |
| **6 [0.236]** | 19.8 [0.698] | 23.4 [0.825] | 23.1 [0.815] | 27.1 [0.956] | 15 [0.53] | 35 [1.23] |
| **8 [0.315]** | 26.4 [0.931] | 31.1 [1.097] | 31.2 [1.101] | 36.3 [1.280] | | |
| **10 [0.394]** | 33.7 [1.189] | 39.2 [1.383] | 39.9 [1.407] | 45.9 [1.619] | | |

Notes: 1. The above table is for the standard strokes.
2. Sensor switch codes A and B show the lead wire lengths.
A: 1000mm [39in.] B: 3000mm [118in.]

Calculation example: For the mass of a double acting type cylinder with magnet, bore size of 8mm, stroke of 10mm, and with 2 sensor switches (**ZE135A**)
36.3＋(15×2)＝66.3g [2.339oz.]

## Dimensions of Non-rotating Cylinder Double Acting Type (mm)

● $\phi$6～$\phi$10

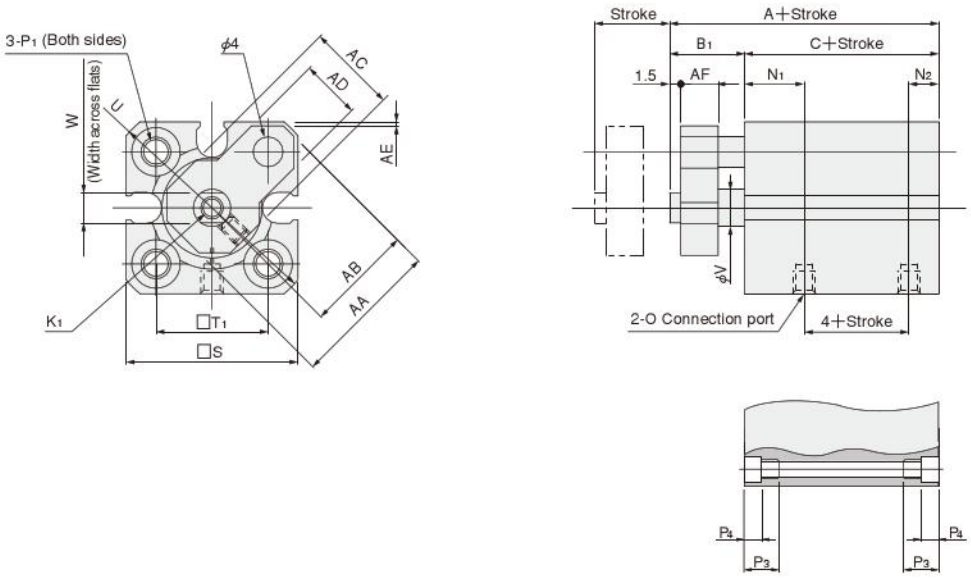


| Type / Bore mm [in.] / Code | Standard cylinder (CDAL) | | | Cylinder with magnet (CDALS) | | | $K_1$ | $N_1$ | $N_2$ | O | $P_1$ |
|---|---|---|---|---|---|---|---|---|---|---|---|
| | A | $B_1$ | C | A | $B_1$ | C | | | | | |
| **6 [0.236]** | 24 | 10 | 14 | 29 | 10 | 19 | M2.5×0.45 Depth5 | 6.5 | 3.5 | M3×0.5 | $\phi$3.3 (Thru hole) C'bore $\phi$6 (Both sides) and M4×0.7 (Both sides) |
| **8 [0.315]** | 25 | 10 | 15 | 30 | 10 | 20 | M3×0.5 Depth5 | 7.5 | 3.5 | M3×0.5 | $\phi$3.3 (Thru hole) C'bore $\phi$6.2 (Both sides) and M4×0.7 (Both sides) |
| **10 [0.394]** | 26 | 10 | 16 | 31 | 10 | 21 | M3×0.5 Depth5 | 8 | 4 | M3×0.5 | $\phi$3.3 (Thru hole) C'bore $\phi$6.2 (Both sides) and M4×0.7 (Both sides) |

| Bore mm [in.] / Code | $P_3$ | $P_4$ | S | $T_1$ | U | V | W | Appropriate through bolt | AA | AB | AC | AD | AE | AF |
|---|---|---|---|---|---|---|---|---|---|---|---|---|---|---|
| **6 [0.236]** | 9.5 | 3.5 | 19 | 11 | R12 | 4 | 3.5 | M3 | 15 | 11.5 | 9.5 | 7 | 0.3 | 5 |
| **8 [0.315]** | 9.5 | 3.5 | 21 | 13 | R13.5 | 5 | 4 | M3 | 17 | 12.5 | 11 | 7 | 0.6 | 5 |
| **10 [0.394]** | 9.5 | 3.5 | 23 | 15 | R15 | 5 | 4 | M3 | 20 | 14.5 | 12 | 8 | 0.5 | 5 |

## Dimensions of Male Rod End Thread Specification (mm)

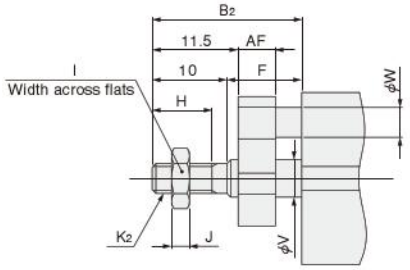


| Bore mm [in.] / Code | $B_2$ | F | H | I | J | $K_2$ | V | W | AF |
|---|---|---|---|---|---|---|---|---|---|
| **6 [0.236]** | 20 | 10 | 8 | 5.5 | 1.8 | M3×0.5 | 4 | 4 | 5 |
| **8 [0.315]** | 20 | 10 | 8 | 7 | 2.4 | M4×0.7 | 5 | 4 | 5 |
| **10 [0.394]** | 20 | 10 | 8 | 7 | 2.4 | M4×0.7 | 5 | 4 | 5 |

Remark: Cylinder joints and cylinder rod ends are available for mounting with the rod end male thread specification. For details, see p.1568.

# JIG CYLINDERS C SERIES SQUARE ROD CYLINDERS

## Double Acting Type

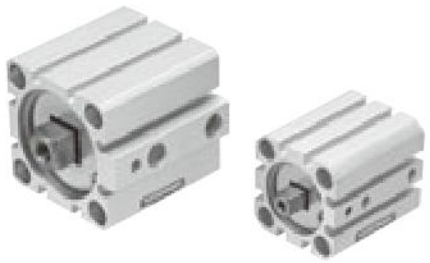

## Symbol

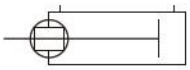

## Specifications

| Item / Bore size mm [in.] | 20 [0.787] | 25 [0.984] | 32 [1.260] | 40 [1.575] | 50 [1.969] | 63 [2.480] |
|---|---|---|---|---|---|---|
| Operation type | Double acting type | | | | | |
| Media | Air | | | | | |
| Operating pressure range MPa [psi.] | 0.1～1.0 [15～145] | | | | | |
| Proof pressure MPa [psi.] | 1.5 [218] | | | | | |
| Operating temperature range °C [°F] | 0～60 [32～140] | | | | | |
| Operating speed range mm/s [in./sec.] | 30～500 [1.2～19.7] | | | | 30～300 [1.2～11.8] | |
| Cushion | Rubber bumper (Optional) | | | | | |
| Lubrication | Not required (If lubrication is required, use Turbine Oil Class 1 [**ISO VG32**] or equivalent.) | | | | | |
| Non-rotating accuracy | ±1.5° | | ±0.8° | | ±0.6° | |
| Allowable torque Note N·cm [in·lbf] | 2 [0.18] | 2.4 [0.21] | | 4.4 [0.39] | | |
| Port size | M5×0.8 | | Rc1/8 | | Rc1/4 | |

Remark: For Handling Instructions and Precautions, see p.205.
Note: Maximum torque allowed on piston rod.

## Bore Size and Stroke

For non-standard strokes, see p.206.

mm

| Bore size | Standard strokes | |
|---|---|---|
| | Standard cylinder | Cylinder with magnet |
| **20** | 5, 10, 15, 20, 25, 30, 35, 40, 45, 50 | 5, 10, 15, 20, 25, 30, 35, 40, 45, 50 |
| **25** | | |
| **32** | 5, 10, 15, 20, 25, 30, 35, 40, 45, 50, 75, 100 | 5, 10, 15, 20, 25, 30, 35, 40, 45, 50, 75, 100 |
| **40** | | |
| **50** | 10, 15, 20, 25, 30, 35, 40, 45, 50, 75, 100 | 10, 15, 20, 25, 30, 35, 40, 45, 50, 75, 100 |
| **63** | | |

Remarks: 1. Stroke tolerance $^{+1}_{0}$ [$^{+0.039in.}_{0}$]
2. In most cases, body cutting is used for the non-standard strokes.
However, body cutting is not used for strokes of less than 5mm for $\phi$12～$\phi$40, and strokes of less than 10mm for $\phi$50 and $\phi$63. The collar packed is used for these cases.

## Order Codes for Square Rod Cylinders

**Operation type**

**DA :** Double acting type

**Rod end specification**

Female thread

Male thread

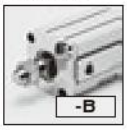


**Mounting type**

Basic type

Foot mounting type

Flange mounting type Note2

**Sensor switch type** Note3
(For cylinder with magnet)

**Blank:**
No sensor switch

**-ZE135 :** With ZE135
- 2-lead wire Solid state type
- With indicator lamp
- DC10～28V
- Horizontal lead wire

**-ZE155 :** With ZE155
- 3-lead wire Solid state type
- With indicator lamp
- DC4.5～28V
- Horizontal lead wire

**-ZE235 :** With ZE235
- 2-lead wire Solid state type
- With indicator lamp
- DC10～28V
- Vertical lead wire

**-ZE255 :** With ZE255
- 3-lead wire Solid state type
- With indicator lamp
- DC4.5～28V
- Vertical lead wire

**-ZE101 :** With ZE101
- 2-lead wire Reed switch type
- Without indicator lamp
- DC5～28V AC85～115V
- Horizontal lead wire

**-ZE102 :** With ZE102
- 2-lead wire Reed switch type
- With indicator lamp
- DC10～28V AC85～115V
- Horizontal lead wire

**-ZE201 :** With ZE201
- 2-lead wire Reed switch type
- Without indicator lamp
- DC5～28V AC85～115V
- Vertical lead wire

**-ZE202 :** With ZE202
- 2-lead wire Reed switch type
- With indicator lamp
- DC10～28V AC85～115V
- Vertical lead wire

**Lead wire length**

**A :** 1000mm [39in.]
**B :** 3000mm [118in.]

**Number of sensor switches**
(For cylinder with magnet)
**Blank:**
No sensor switch

**1 :** With 1 sensor switch
**2 :** With 2 sensor switches

**Square rod cylinder**

**Cylinder specification**

**Blank :** Standard cylinder Note1
**S :** Cylinder with magnet

**Bumper**

**Blank :** No bumper
**-R :** With bumper

**Centering location**

**Blank :** No centering location
**-G :** With centering location

| Basic type | | | | Bore size × Stroke | | | | | | | |
|---|---|---|---|---|---|---|---|---|---|---|---|
| C | DA | L | S | × | -B | -R | -G | -1<br>-3 | -ZE135<br>-ZE155<br>-ZE235<br>-ZE255<br>-ZE101<br>-ZE102<br>-ZE201<br>-ZE202 | A<br>B | 1<br>2<br>⋮<br>n |

- See table for bore size and stroke.
- For information regarding the cylinder joint and cylinder rod end for male thread, see p.1568.
- Mounting brackets are included at shipping.
- For the order codes of sensor switches only, see p.199.

Notes: 1. In the standard cylinder, a magnet for the sensor switch is not built-in.
2. When using with a centering location (**-G**), the flange mounting bracket can be mounted on the head side only.
3. For details of sensor switches, see p.1544.

## Additional Parts (To be ordered separately)

Foot mounting bracket (p.197)

Flange mounting bracket (p.198)

Mounting screws (p.209)

## Inner Construction and Major Parts

### ● Double acting type

● $\phi$20～$\phi$40

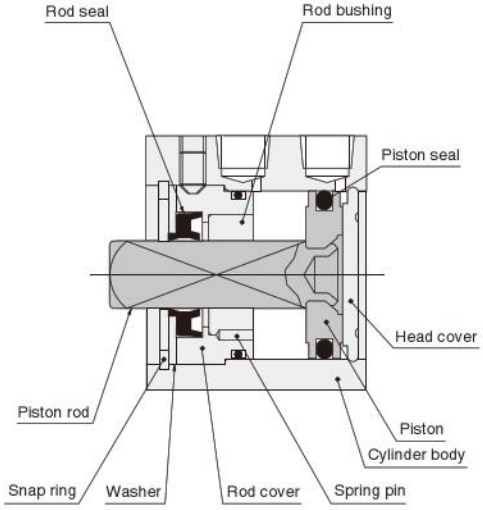


● $\phi$50, $\phi$63

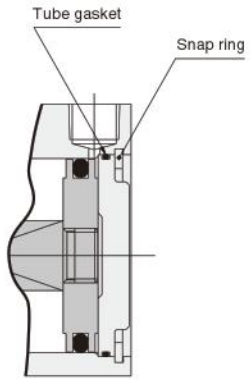


### ● Cylinder with magnet

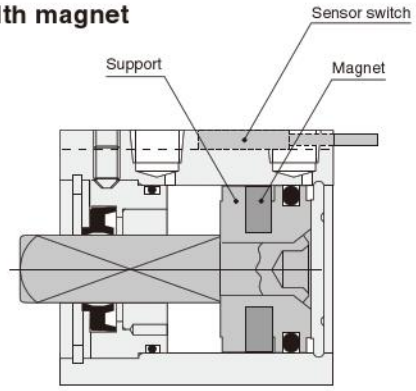


### ● With bumper

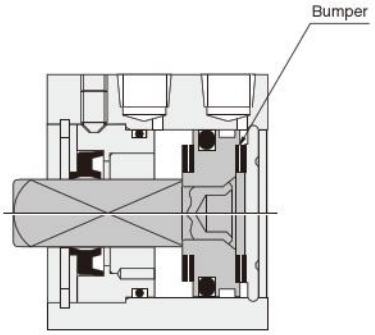


## Major Parts and Materials

| Parts / Bore mm | $\phi$ 20～$\phi$ 63 |
|---|---|
| Cylinder body | Aluminum alloy (anodized) |
| Piston | Aluminum alloy (special rust prevention treatment) |
| Piston rod | Steel (chrome plated) |
| Seal | Synthetic rubber (NBR; urethane for the rod seal) |
| Rod bushing | Oil impregnated bronze |
| Rod cover | Aluminum alloy (anodized) |
| Head cover | Aluminum alloy (anodized) |
| Spring pin | Steel |
| Washer | Steel (nickel plated) |
| Snap ring | Steel (phosphate coating) |
| Bumper | Synthetic rubber (NBR) |
| Magnet | Plastic magnet |
| Support | Aluminum alloy (special rust prevention treatment) |

## Seals

| Parts / Bore mm | Rod seal | Piston seal | Tube gasket | |
|---|---|---|---|---|
| | | | Rod side | Head side |
| $\phi$ 20 | KC-7.4 | COP-20 | Y090216 | None |
| $\phi$ 25 | KC-7.4 | COP-25 | Y090210 | None |
| $\phi$ 32 | KC-13 | COP-32 | L090084 | None |
| $\phi$ 40 | KC-13 | COP-40 | L090151 | None |
| $\phi$ 50 | KC-18 | COP-50 | L090174 | L090106 |
| $\phi$ 63 | KC-18 | COP-63 | L090180 | L090107 |

## Mass

g [oz.]

| Bore size mm [in.] | Zero stroke mass Note1 | Additional mass for each 1mm [0.0394in.] stroke | Additional mass of cylinder with bumper | Additional mass of cylinder with magnet | Mass of mounting bracket | | Additional mass of sensor switch Note2 | |
|---|---|---|---|---|---|---|---|---|
| | | | | | Foot bracket | Flange bracket | ZE□□□A | ZE□□□B |
| **20 [0.787]** | 63.89 [2.254] | 2.07 [0.0730] | 10.36 [0.365] | 25.71 [0.907] | 87 [3.07] | 105 [3.70] | 15 [0.53] | 35 [1.23] |
| **25 [0.984]** | 96.54 [3.405] | 2.65 [0.0935] | 13.24 [0.467] | 37.47 [1.322] | 108 [3.81] | 165 [5.82] | | |
| **32 [1.260]** | 160.05 [5.646] | 3.86 [0.136] | 19.31 [0.681] | 52.43 [1.849] | 131 [4.62] | 196 [6.91] | | |
| **40 [1.575]** | 241.47 [8.517] | 4.52 [0.159] | 0 | 69.15 [2.439] | 168 [5.93] | 351 [12.38] | | |
| **50 [1.969]** | 477.70 [16.850] | 7.11 [0.251] | 0 | 108 [3.81] | 232 [8.18] | 471 [16.61] | | |
| **63 [2.480]** | 706.58 [24.923] | 8.77 [0.309] | 0 | 159 [5.61] | 312 [11.01] | 615 [21.69] | | |

Notes: 1. The above table is for the standard strokes.
2. Sensor switch codes A and B show the lead wire lengths.
A : 1000mm [39in.] B : 3000mm [118in.]

Calculation example: For the mass of a double acting type cylinder with magnet, bore size of 32mm, stroke of 30mm, and with 2 sensor switches (**ZE135A**)
167.38＋(3.86×30)＋52.43＋(15×2)＝365.61g [12.896oz.]

## Dimensions of Square Rod Cylinder Double Acting Type (mm)

### ● $\phi$20～$\phi$25

CAD CDAL Bore size

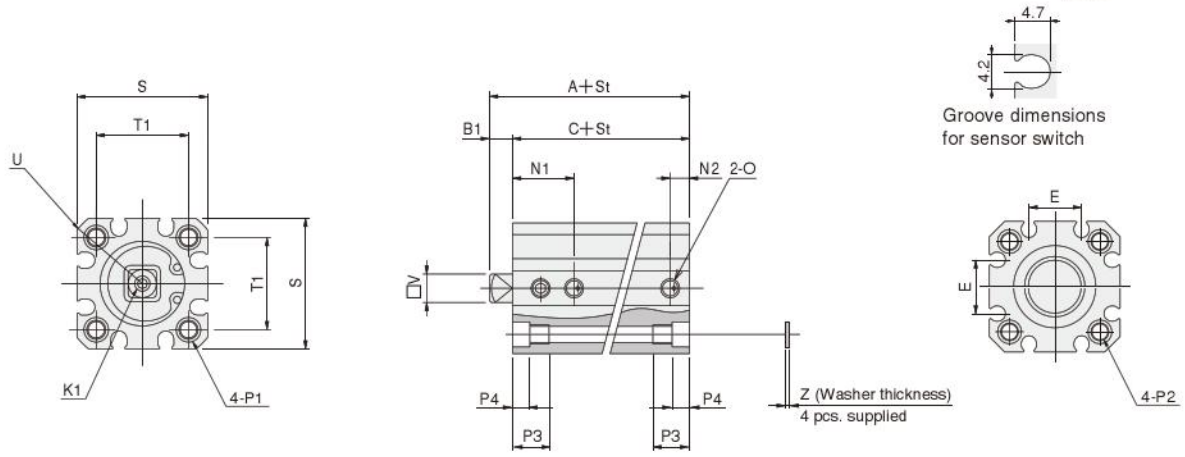


### ● $\phi$32～$\phi$63

CAD CDAL Bore size

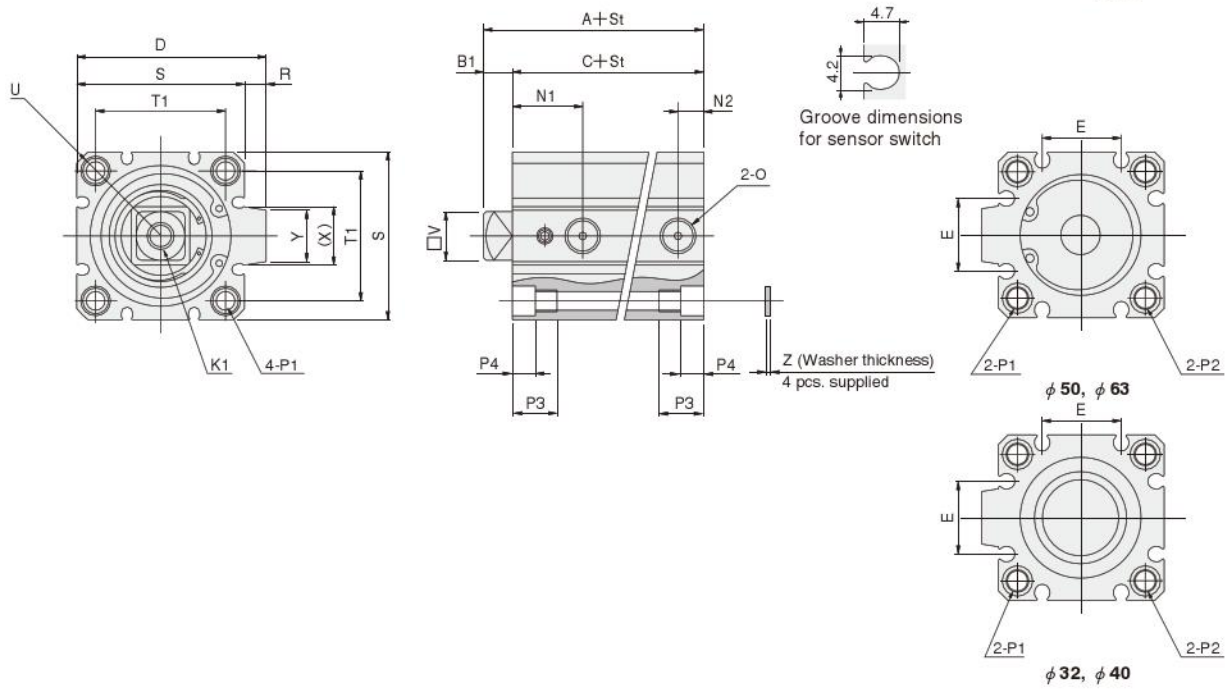


| Type / Code / Bore mm [in.] | Standard cylinder (CDAL) | | | Cylinder with magnet (CDALS) | | | Standard cylinder with bumper (CDAL-R) | | | Cylinder with magnet and bumper (CDALS-R) | | | D | E | $K_1$ | $N_1$ | $N_2$ | O |
|---|---|---|---|---|---|---|---|---|---|---|---|---|---|---|---|---|---|---|
| | A | $B_1$ | C | A | $B_1$ | C | A | $B_1$ | C | A | $B_1$ | C | | | | | | |
| **20 [0.787]** | 32 | 6 | 26 | 42 | 6 | 36 | 37 | 6 | 31 | 47 | 6 | 41 | — | 12.2 | M4X0.7 Depth8 | 16 | 5 | M5X0.8 |
| **25 [0.984]** | 33.5 | 6 | 27.5 | 43.5 | 6 | 37.5 | 38.5 | 6 | 32.5 | 48.5 | 6 | 42.5 | — | 12.2 | M4X0.7 Depth8 | 17 | 5 | M5X0.8 |
| **32 [1.260]** | 39 | 7 | 32 | 49 | 7 | 42 | 44 | 7 | 37 | 49 | 7 | 42 | 48.5 | 18.2 | M8X1.25 Depth12 | 18.5 | 7.5〔6〕 | Rc1/8 |
| **40 [1.575]** | 43 | 7 | 36 | 53 | 7 | 46 | 43 | 7 | 36 | 53 | 7 | 46 | 56.5 | 18.2 | M8X1.25 Depth12 | 20.5 | 7.5 | Rc1/8 |
| **50 [1.969]** | 53.7 | 10.7 | 43 | 63.7 | 10.7 | 53 | 53.7 | 10.7 | 43 | 63.7 | 10.7 | 53 | 70 | 24.8 | M10X1.5 Depth15 | 26 | 9.5 | Rc1/4 |
| **63 [2.480]** | 56.2 | 9.2 | 47 | 66.2 | 9.2 | 57 | 56.2 | 9.2 | 47 | 66.2 | 9.2 | 57 | 83 | 26.8 | M10X1.5 Depth15 | 27.5 | 11 | Rc1/4 |

| Code / Bore mm [in.] | $P_1$ | $P_2$ | $P_3$ | $P_4$ | R | S | $T_1$ | U | V | X | Y | Z | Appropriate through bolt※ |
|---|---|---|---|---|---|---|---|---|---|---|---|---|---|
| **20 [0.787]** | $\phi$4.3 (Thru hole) C'bore $\phi$6.5 (Both sides) and M5X0.8 (Both sides) | Counterbore $\phi$6.5 and M5X0.8 | 9.5 | 4.5 | — | 34 | 24 | R22 | 7.4 | — | — | 1 | M3 |
| **25 [0.984]** | $\phi$5.1 (Thru hole) C'bore $\phi$8 (Both sides) and M6X1 (Both sides) | Counterbore $\phi$8 and M6X1 | 11.5 | 5.5 | — | 40 | 28 | R25 | 7.4 | — | — | 1 | M4 |
| **32 [1.260]** | $\phi$5.1 (Thru hole) C'bore $\phi$8 (Both sides) and M6X1 (Both sides) | Counterbore $\phi$8 and M6X1 | 11.5 | 5.5 | 4.5 | 44 | 34 | R29.5 | 13 | 15 | 13.6 | 1 | M4 |
| **40 [1.575]** | $\phi$6.9 (Thru hole) C'bore $\phi$9.5 (Both sides) and M8X1.25 (Both sides) | Counterbore $\phi$9.5 and M8X1.25 | 15.5 | 7.5 | 4.5 | 52 | 40 | R35 | 13 | 15 | 13.6 | 1.6 | M5 |
| **50 [1.969]** | $\phi$6.9 (Thru hole) C'bore $\phi$11 (Both sides) and M8X1.25 (Both sides) | Counterbore $\phi$11 and M8X1.25 | 16.5 | 8.5 | 8 | 62 | 48 | R41 | 18 | 21.6 | 19 | 1.6 | M6 |
| **63 [2.480]** | $\phi$6.9 (Thru hole) C'bore $\phi$11 (Both sides) and M8X1.25 (Both sides) | Counterbore $\phi$11 and M8X1.25 | 16.5 | 8.5 | 8 | 75 | 60 | R50 | 18 | 21.6 | 19 | 1.6 | M6 |

Note: Figure in parentheses 〔 〕 is for the standard cylinder (**CDAL**) with 5mm stroke.
※Some types of mounting screws are available (to be ordered separately). See p.209.

## Dimensions of Male Rod End Thread Specification (mm)

CAD Available in the file of each cylinder body.

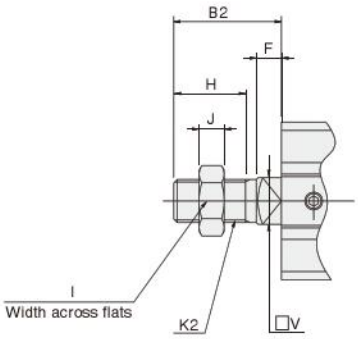


| Bore mm [in.] \ Code | $B_2$ | F | H | I | J | $K_2$ | V |
|---|---|---|---|---|---|---|---|
| **20 [0.787]** | 21 | 6 | 13 | 10 | 5 | M6×1 | 7.4 |
| **25 [0.984]** | 23 | 6 | 15 | 12 | 5 | M8×1 | 7.4 |
| **32 [1.260]** | 30 | 7 | 20 | 17 | 7 | M12×1.25 | 13 |
| **40 [1.575]** | 35 | 7 | 25 | 19 | 8 | M14×1.5 | 13 |
| **50 [1.969]** | 38.7 | 10.7 | 25 | 27 | 11 | M18×1.5 | 18 |
| **63 [2.480]** | 37.2 | 9.2 | 25 | 27 | 11 | M18×1.5 | 18 |

Remark: Cylinder joints and cylinder rod ends are available for mounting with the rod end male thread specification. For details, see p.1568.

## Dimensions of Centering Location (mm)

### ●Female thread specification, with centering location

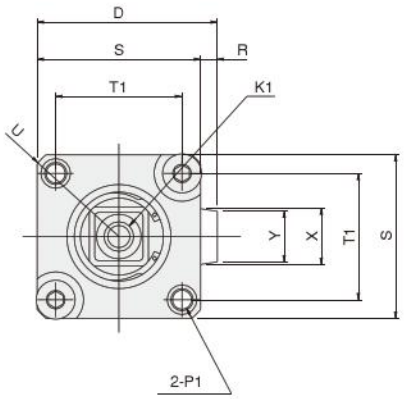


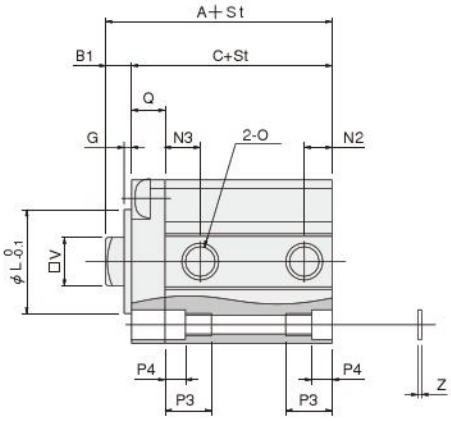


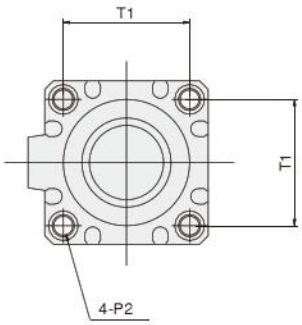


### ●Male thread specification, with centering location

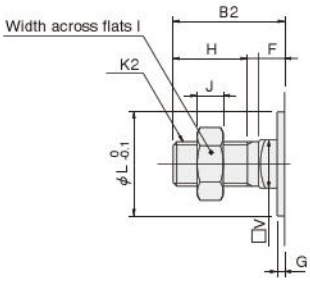


| Bore mm [in.] \ Code | $B_1$ | G | L | $N_3$ | Q |
|---|---|---|---|---|---|
| **20 [0.787]** | 6 | 1.5 | 18 | 9.5 | 6.5 |
| **25 [0.984]** | 6 | 2 | 18 | 10.5 | 6.5 |
| **32 [1.260]** | 7 | 2 | 28 | 9.5 | 9 |
| **40 [1.575]** | 7 | 2 | 28 | 10.5 | 10 |
| **50 [1.969]** | 10.7 | 2 | 38 | 11 | 15 |
| **63 [2.480]** | 9.2 | 2 | 40 | 12.5 | 15 |

● The outward view of the square rod cylinder with centering location differs from the view in the case of no centering location, in that a rod cover is mounted on the piston rod side, as shown in the dimension above.
For the dimension tables for female thread specification with centering location, also use the table on p.152, while for male thread specification with centering location, see the above this page.

# JIG CYLINDERS C SERIES DOUBLE ROD CYLINDERS

**Double Acting Type, Single Acting Type**

## Symbols

**● Double acting type**

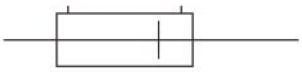

**● Single acting type**

## Specifications

| Item / Bore size mm [in.] | | 6 [0.236] | 8 [0.315] | 10 [0.394] | 12 [0.472] | 16 [0.630] | 20 [0.787] | 25 [0.984] | 32 [1.260] | 40 [1.575] | 50 [1.969] | 63 [2.480] | 80 [3.150] | 100 [3.940] |
|---|---|---|---|---|---|---|---|---|---|---|---|---|---|---|
| Operation type | | Double acting type | | | Double acting type, Single acting type | | | | | | | Double acting type | | |
| Media | | Air | | | | | | | | | | | | |
| Operating pressure range MPa [psi.] | Double acting type | 0.15～0.9 [22～131] | | | 0.1～1.0 [15～145] | | | | | | 0.05～1.0 [7～145] | | | |
| | Single acting type | — | | | 0.18～1.0 [26～145] | 0.15～1.0 [22～145] | | | | | 0.1～1.0 [15～145] | — | | |
| Proof pressure | MPa [psi.] | 1.35 [196] | | | 1.5 [218] | | | | | | | | | |
| Operating temperature range | °C [°F] | 0～60 [32～140] (The heat resistant specification is 120 [248]. Note1) | | | | | | | | | | | | |
| Operating speed range mm/s [in./sec.] | Double acting type | 50～500 [2.0～19.7] | | | 30～500 [1.2～19.7] | | | | | | 30～300 [1.2～11.8] | | | |
| | Single acting type | — | | | 100～500 [3.9～19.7] | | | | | | 100～300 [3.9～11.8] | — | | |
| Cushion | Double acting type | None | | | Rubber bumper (Option Note2) | | | | | | | | | |
| | Single acting type | — | | | None | | | | | | | — | | |
| Lubrication | | Not required (If lubrication is required, use Turbine Oil Class 1 [**ISO VG32**] or equivalent.) | | | | | | | | | | | | |
| Port size | | M3×0.5 | | | M5×0.8 | | | | Rc1/8 | | Rc1/4 | | Rc3/8 | |

Remark: For Handling Instructions and Precautions, see p.205.

Notes: 1. For heat resistant specification, consult us. Not available for bore sizes $\phi$6, $\phi$8, and $\phi$10.
2. Not available for heat resistant specification.

## Bore Size and Stroke

For non-standard strokes, see p.206.

mm

| Operation type | Bore size | Standard strokes: Standard cylinder | Standard strokes: Cylinder with magnet |
|---|---|---|---|
| Double acting type | 6 | 5, 10, 15, 20 | 5, 10, 15, 20 |
| | 8 | | |
| | 10 | | |
| | 12 | 5, 10, 15, 20, 25, 30 | 5, 10, 15, 20, 25, 30 |
| | 16 | | |
| | 20 | 5, 10, 15, 20, 25, 30, 35, 40, 45, 50 | 5, 10, 15, 20, 25, 30, 35, 40, 45, 50 |
| | 25 | | |
| | 32 | 5, 10, 15, 20, 25, 30, 35, 40, 45, 50, 75, 100 | 5, 10, 15, 20, 25, 30, 35, 40, 45, 50, 75, 100 |
| | 40 | | |
| | 50 | 10, 15, 20, 25, 30, 35, 40, 45, 50, 75, 100 | 10, 15, 20, 25, 30, 35, 40, 45, 50, 75, 100 |
| | 63 | | |
| | 80 | | |
| | 100 | | |
| Single acting type | 12 | 5, 10, 15, 20, 25, 30 | 5, 10, 15, 20, 25, 30 |
| | 16 | | |
| | 20 | | |
| | 25 | | |
| | 32 | | |
| | 40 | | |
| | 50 | 10, 15, 20, 25, 30, 35, 40 | 10, 15, 20, 25, 30, 35, 40 |

Remarks: 1. Stroke tolerance $^{+1}_{0}$ [$^{+0.039in.}_{0}$]
2. In most cases, body cutting is used for the non-standard strokes.
However, body cutting is not used for strokes of less than 5mm for $\phi$12～$\phi$40, and strokes of less than 10mm for $\phi$50～$\phi$100. The collar packed is used for these cases.
Bore sizes $\phi$6 to $\phi$10 are collar packed only.

## Order Codes for Double Rod Cylinders

**Operation type**

**DA :** Double acting type
**SA :** Single acting type Note1

**Rod end specification** Note4

Female thread

Male thread

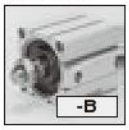


**Mounting type**

Basic type

Foot mounting type Note7

Flange mounting type Note8

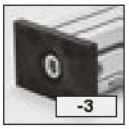


**Sensor switch type** Note6
(For cylinder with magnet)

**Blank:**
No sensor switch

**-ZE135 :** With ZE135
- 2-lead wire Solid state type
- With indicator lamp
- DC10～28V
- Horizontal lead wire

**-ZE155 :** With ZE155
- 3-lead wire Solid state type
- With indicator lamp
- DC4.5～28V
- Horizontal lead wire

**-ZE235 :** With ZE235
- 2-lead wire Solid state type
- With indicator lamp
- DC10～28V
- Vertical lead wire

**-ZE255 :** With ZE255
- 3-lead wire Solid state type
- With indicator lamp
- DC4.5～28V
- Vertical lead wire

**-ZE101 :** With ZE101 note7
- 2-lead wire Reed switch type
- Without indicator lamp
- DC5～28V AC85～115V
- Horizontal lead wire

**-ZE102 :** With ZE102 note7
- 2-lead wire Reed switch type
- With indicator lamp
- DC10～28V AC85～115V
- Horizontal lead wire

**-ZE201 :** With ZE201 note7
- 2-lead wire Reed switch type
- Without indicator lamp
- DC5～28V AC85～115V
- Vertical lead wire

**-ZE202 :** With ZE202 note7
- 2-lead wire Reed switch type
- With indicator lamp
- DC10～28V AC85～115V
- Vertical lead wire

**Lead wire length**

**A :** 1000mm [39in.]
**B :** 3000mm [118in.]

**Number of sensor switches**
(For cylinder with magnet)
**Blank:**
No sensor switch

**1 :** With 1 sensor switch
**2 :** With 2 sensor switches

**Double rod cylinder**

**Cylinder specification**

**Blank :** Standard cylinder Note2 (Non-ion specification Note9)
**S :** Cylinder with magnet (Non-ion specification Note9)
**F :** Heat resistant cylinder Note3

**Bumper** Note5

**Blank :** No bumper
**-R :** With bumper

**Centering location** Note7

**Blank :** No centering location
**-G :** With centering location

| Basic type | | | | Bore size×Stroke | | | | | | | |
|---|---|---|---|---|---|---|---|---|---|---|---|
| C | DA<br>SA | D | S<br>F | × | -B Note10 | -R | -G | -1<br>-3 | -ZE135<br>-ZE155<br>-ZE235<br>-ZE255<br>-ZE101<br>-ZE102<br>-ZE201<br>-ZE202 | A<br>B | 1<br>2<br>⋮<br>n |

- See table for bore size and stroke.
- Mounting brackets are included at shipping.
- For the order codes of sensor switches only, see p.199.
- For heat resistant specification, sensor switch is not available.
- In sizes $\phi$12 and $\phi$16 with foot mounting brackets and strokes of less than 10mm, the foot mounting bracket and sensor switch may interfere with each other, which could prevent 2 sensor switches from being mounted. For details, consult us.

Notes:
1. Used for both single acting push type and single acting pull type. Not available for bore sizes $\phi$6, $\phi$8, and $\phi$10.
2. In the standard cylinders, a magnet for the sensor switch is not built-in.
3. Not available for the cylinder with magnet or the cylinder with bumper.
4. Specifications are the same for both sides.
5. For the double acting type only. Not available in heat resistant specification, however. Not available for bore sizes $\phi$6, $\phi$8, and $\phi$10.
6. For details of sensor switches, see p.1544.
7. Not available for bore sizes $\phi$6, $\phi$8, $\phi$10 and $\phi$12.
8. Cannot be mounted on bore size $\phi$40 with centering location (**-G**). Not available for bore sizes $\phi$6, $\phi$8, and $\phi$10.
9. Bore sizes $\phi$6, $\phi$8, $\phi$10, and $\phi$12 are not non-ion specification.
10. For information regarding the cylinder joint and cylinder rod end for male thread, see p.1568.

## Additional Parts (To be ordered separately)

Foot mounting bracket (p.197)

Flange mounting bracket (p.198)

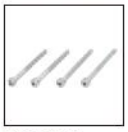

Mounting screws (p.209)

## Inner Construction and Major Parts

### ●Double acting type (CDAD)

#### ● $\phi$6～$\phi$10

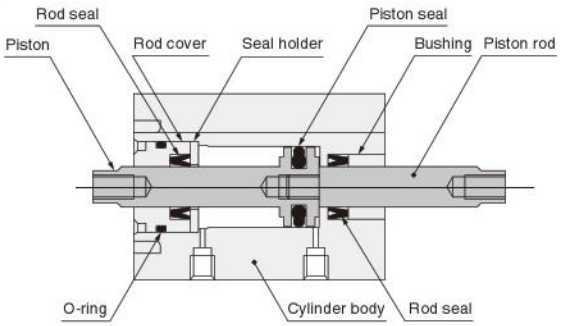


#### ● $\phi$12～$\phi$100

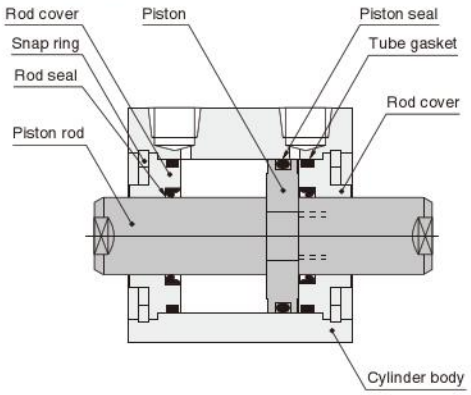


### ●Single acting type (CSAD)

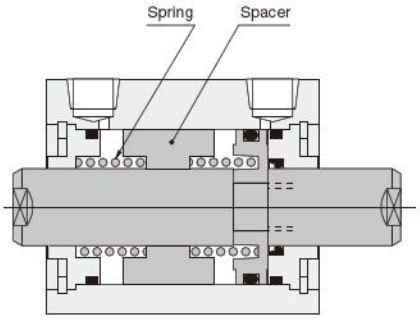


Note: Bore sizes $\phi$6 to $\phi$10 are not available as single acting cylinders.

### ●Cylinder with magnet

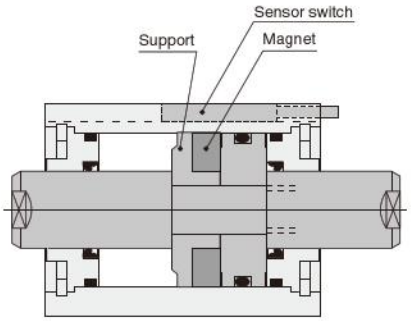


### ●With bumper

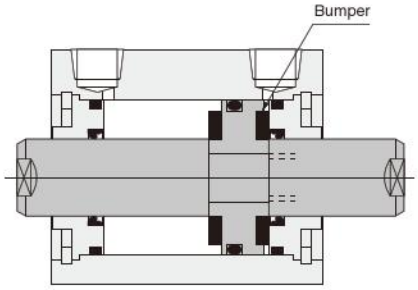


Note: Bore sizes $\phi$6 to $\phi$10 are not available with bumpers.

## Major Parts and Materials

| Parts \ Bore mm | $\phi$6 | $\phi$8 | $\phi$10 | $\phi$12 | $\phi$16 | $\phi$20 | $\phi$25 | $\phi$32 | $\phi$40 | $\phi$50 | $\phi$63 | $\phi$80 | $\phi$100 |
|---|---|---|---|---|---|---|---|---|---|---|---|---|---|
| Cylinder body | Aluminum alloy (anodized) | | | | | | | | | | | | |
| Piston | Stainless steel | | | Aluminum alloy (special rust prevention treatment) | | | | | | | | | |
| Piston rod | Stainless steel | | | Stainless steel (chrome plated) | | | | Steel (chrome plated) | | | | | |
| Seal | Synthetic rubber (NBR) | | | | | | | | | | | | |
| Rod cover | Aluminum alloy (special wear-resistant treatment) | | | | | | | | | | | | |
| Snap ring | — | | | Steel (phosphate coating) | | | | | | | | | |
| Spring | — | | | Piano wire | | | | | | | — | | |
| Spacer | — | | | Aluminum alloy (special rust prevention treatment) | | | | | | | — | | |
| Bumper | — | | | Synthetic rubber (NBR; urethane for $\phi$12 only) | | | | | | | | | |
| Magnet | Neodymium magnet | | | Plastic magnet | | | | | | | | | |
| Support | — | | | Aluminum alloy (special rust prevention treatment) | | | | | | | | | |
| Bushing | Copper alloy | | | — | | | | | | | | | |

## Seals

| Parts / Bore mm | Rod seal | Piston seal | Tube gasket |
|---|---|---|---|
| $\phi$12 | MYR-6 | COP-12 | Y090260 |
| $\phi$16 | MYR-8 | COP-16 | Y090207 |
| $\phi$20 | MYR-10 | COP-20(MYA-16) | Y090216 |
| $\phi$25 | MYR-12 | COP-25(MYA-21) | Y090210 |
| $\phi$32 | MYR-16 | COP-32 | L090084 |
| $\phi$40 | MYR-16 | COP-40 | L090151 |
| $\phi$50 | MYR-20 | COP-50 | L090174 |
| $\phi$63 | MYR-20 | COP-63 | L090180 |
| $\phi$80 | PNY-25 | COP-80 | L090171 |
| $\phi$100 | PNY-32 | COP-100 | L090172 |

Note: Items in parentheses ( ) are for the single acting type.

# Mass

## ● Double acting type

g [oz.]

| Bore size mm [in.] | Zero stroke mass | Additional mass for each 1mm [0.0394in.] stroke | Additional mass of cylinder with bumper | Additional mass of cylinder with magnet | Mass of mounting bracket | | Additional mass of sensor switch Note | |
|---|---|---|---|---|---|---|---|---|
| | | | | | Foot bracket | Flange bracket | ZE□□□A | ZE□□□B |
| **6 [0.236]** | 12.7 [0.448] | 0.84 [0.0296] | — | 3.9 [0.138] | — | — | 15 [0.53] | 35 [1.23] |
| **8 [0.315]** | 19.2 [0.677] | 1.11 [0.0392] | — | 5.3 [0.187] | — | — | | |
| **10 [0.394]** | 21.0 [0.741] | 1.27 [0.0448] | — | 6.7 [0.236] | — | — | | |
| **12 [0.472]** | 30.41 [1.073] | 1.51 [0.0533] | 7.53 [0.266] | 6.59 [0.232] | 50 [1.76] | 55 [1.94] | | |
| **16 [0.630]** | 44.4 [1.566] | 2.01 [0.0709] | 10.05 [0.354] | 9.93 [0.350] | 62 [2.19] | 71 [2.50] | | |
| **20 [0.787]** | 73.31 [2.586] | 2.88 [0.102] | 14.38 [0.507] | 25.71 [0.907] | 84 [2.96] | 101 [3.56] | | |
| **25 [0.984]** | 104.2 [3.675] | 3.99 [0.141] | 19.97 [0.704] | 37.47 [1.322] | 104 [3.67] | 160 [5.64] | | |
| **32 [1.260]** | 165.44 [5.836] | 5.69 [0.201] | 28.47 [1.004] | 52.43 [1.849] | 126 [4.44] | 186 [6.56] | | |
| **40 [1.575]** | 241.43 [8.516] | 6.35 [0.224] | 0 | 69.15 [2.439] | 160 [5.64] | 335 [11.82] | | |
| **50 [1.969]** | 328.92 [11.602] | 9.5 [0.335] | 0 | 108 [3.81] | 220 [7.76] | 447 [15.77] | | |
| **63 [2.480]** | 499.3 [17.61] | 11.16 [0.394] | 0 | 159 [5.61] | 300 [10.58] | 591 [20.85] | | |
| **80 [3.150]** | 1029.17 [36.302] | 16.91 [0.596] | 0 | 245 [8.64] | 644 [22.72] | 1414 [49.88] | | |
| **100 [3.940]** | 1872.15 [66.037] | 24.93 [0.879] | 0 | 360 [12.70] | 1172 [41.34] | 2606 [91.92] | | |

Note: Sensor switch codes A and B show the lead wire lengths.
A: 1000mm [39in.] B: 3000mm [118in.]

## ● Single acting type

g [oz.]

| Item | Basic mass Note1 | | | | | | | | Additional mass of cylinder with magnet | Mass of mounting bracket | | Additional mass of sensor switch Note2 | |
|---|---|---|---|---|---|---|---|---|---|---|---|---|---|
| Bore mm [in.] / Stroke mm | 5 | 10 | 15 | 20 | 25 | 30 | 35 | 40 | 5~30 (ϕ50: 10~40) | Foot bracket | Flange bracket | ZE□□□A | ZE□□□B |
| **12 [0.472]** | 42.64 [1.504] | 50.16 [1.769] | 57.69 [2.035] | 76.83 [2.710] | 84.35 [2.975] | 91.88 [3.241] | — | — | 7.78 [0.274] | 50 [1.76] | 55 [1.94] | 15 [0.53] | 35 [1.23] |
| **16 [0.630]** | 62.08 [2.190] | 72.13 [2.544] | 82.18 [2.899] | 106.48 [3.756] | 116.53 [4.110] | 126.58 [4.465] | — | — | 10.32 [0.364] | 62 [2.19] | 71 [2.50] | | |
| **20 [0.787]** | 84.93 [2.996] | 99.31 [3.503] | 113.68 [4.010] | 147.6 [5.206] | 161.98 [5.714] | 176.35 [6.220] | — | — | 23.38 [0.825] | 84 [2.96] | 101 [3.56] | | |
| **25 [0.984]** | 120.1 [4.236] | 140.07 [4.941] | 160.04 [5.645] | 206.73 [7.292] | 226.7 [7.996] | 246.67 [8.701] | — | — | 39.1 [1.379] | 104 [3.67] | 160 [5.64] | | |
| **32 [1.260]** | 187.86 [6.626] | 216.33 [7.631] | 244.79 [8.635] | 335.01 [11.817] | 363.48 [12.821] | 391.94 [13.825] | — | — | 50.58 [1.784] | 126 [4.44] | 186 [6.56] | | |
| **40 [1.575]** | 266 [9.38] | 297.75 [10.503] | 329.49 [11.622] | 448.28 [15.812] | 480.02 [16.932] | 511.77 [18.052] | — | — | 69.42 [2.449] | 160 [5.64] | 335 [11.82] | | |
| **50 [1.969]** | — | 401.18 [14.151] | 448.67 [15.826] | 496.15 [17.501] | 639.23 [22.548] | 686.72 [24.223] | 734.2 [25.898] | 781.69 [27.573] | 106.05 [3.741] | 220 [7.76] | 447 [15.77] | | |

Notes: 1. The above table is for the standard strokes.
2. Sensor switch codes A and B show the lead wire lengths.
A: 1000mm [39in.] B: 3000mm [118in.]

Calculation example: For the mass of a double acting type cylinder with magnet, bore size of 25mm, stroke of 30mm, and with 2 sensor switches (**ZE135A**)
104.2+(3.99×30)+37.47+(15×2)=291.37g [10.278oz.]

## Dimensions of Double Rod Double Acting Type (mm)

### ● $\phi$6～$\phi$25

CDAD Bore size

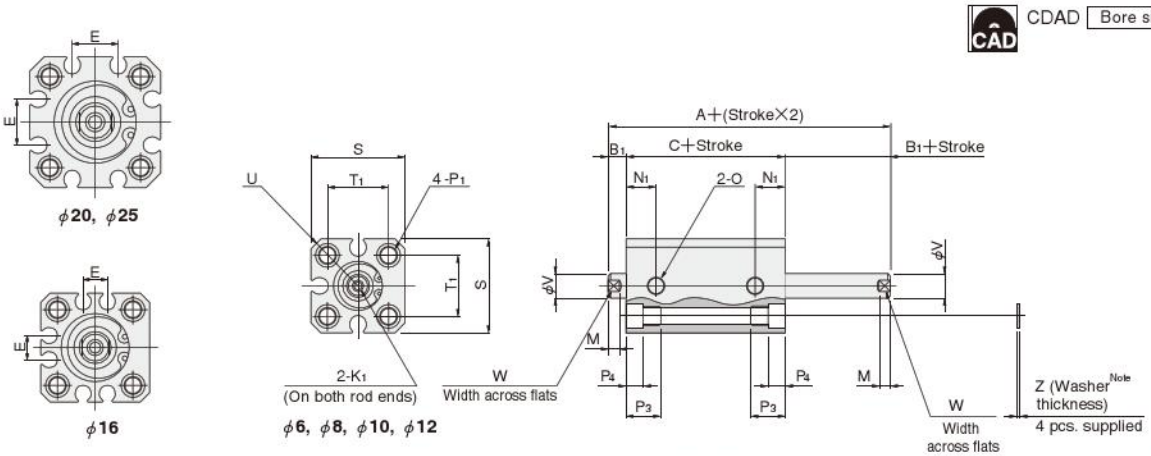


Note: Washers for bore sizes $\phi$6, $\phi$8, and $\phi$10 are not available.

● The drawing is for $\phi$12.

### ● $\phi$32～$\phi$100

CDAD Bore size

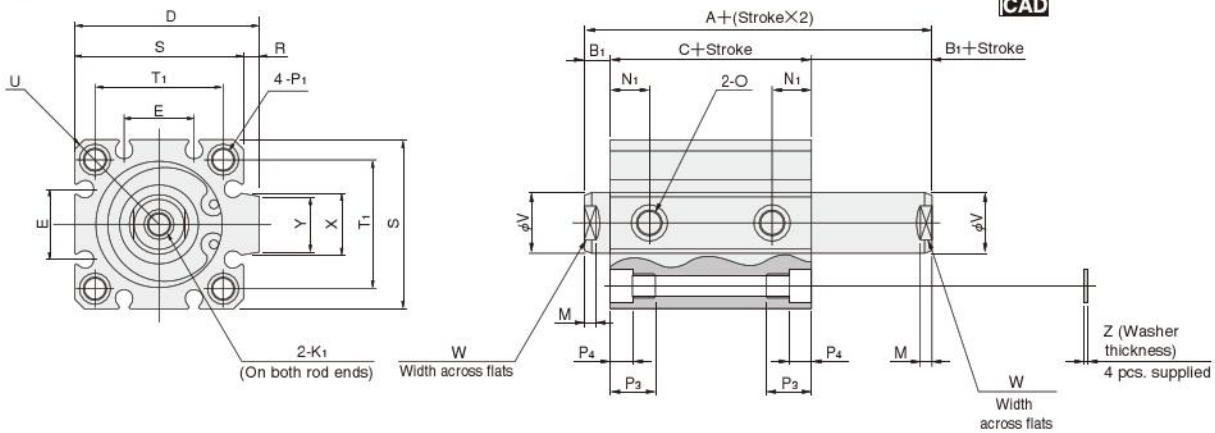


| Type / Code / Bore mm [in.] | Standard cylinder (CDAD) | | | Cylinder with magnet (CDADS) | | | Standard cylinder with bumper (CDAD-R) | | | Cylinder with magnet and bumper (CDADS-R) | | | D | E | K1 | M | N1 | O |
|---|---|---|---|---|---|---|---|---|---|---|---|---|---|---|---|---|---|---|
| | A | B1 | C | A | B1 | C | A | B1 | C | A | B1 | C | | | | | | |
| 6 [0.236] | 28.5 | 5 | 18.5 | 33.5 | 5 | 23.5 | — | — | — | — | — | — | — | — | M2.5×0.45 Depth5 | 3 | 7 | M3×0.5 |
| 8 [0.315] | 30.5 | 5 | 20.5 | 35.5 | 5 | 25.5 | — | — | — | — | — | — | — | — | M3×0.5 Depth5 | 3 | 7.5 | M3×0.5 |
| 10 [0.394] | 31 | 5 | 21 | 36 | 5 | 26 | — | — | — | — | — | — | — | — | M3×0.5 Depth5 | 3 | 8.5 | M3×0.5 |
| 12 [0.472] | 33 | 5 | 23 | 38 | 5 | 28 | 38 | 5 | 28 | 43 | 5 | 33 | — | — | M3×0.5 Depth6 | 3.5 | 8 | M5×0.8 |
| 16 [0.630] | 34 | 5.5 | 23 | 39 | 5.5 | 28 | 39 | 5.5 | 28 | 44 | 5.5 | 33 | — | 6.2 | M4×0.7 Depth8 | 3.5 | 8 | M5×0.8 |
| 20 [0.787] | 37 | 5.5 | 26 | 47 | 5.5 | 36 | 42 | 5.5 | 31 | 52 | 5.5 | 41 | — | 12.2 | M5×0.8 Depth10 | 4.5 | 9.5 | M5×0.8 |
| 25 [0.984] | 38.5 | 6 | 26.5 | 48.5 | 6 | 36.5 | 43.5 | 6 | 31.5 | 53.5 | 6 | 41.5 | — | 12.2 | M6×1 Depth10 | 5 | 10.5 | M5×0.8 |
| 32 [1.260] | 44 | 7 | 30 | 54 | 7 | 40 | 49 | 7 | 35 | 54 | 7 | 40 | 48.5 | 18.2 | M8×1.25 Depth12 | 6 | 9.5 | Rc1/8 |
| 40 [1.575] | 47 | 7 | 33 | 57 | 7 | 43 | 47 | 7 | 33 | 57 | 7 | 43 | 56.5 | 18.2 | M8×1.25 Depth12 | 6 | 10.5 | Rc1/8 |
| 50 [1.969] | 48 | 9 | 30 | 58 | 9 | 40 | 48 | 9 | 30 | 58 | 9 | 40 | 70 | 24.8 | M10×1.5 Depth15 | 7 | 11 | Rc1/4 |
| 63 [2.480] | 52.5 | 9 | 34.5 | 62.5 | 9 | 44.5 | 52.5 | 9 | 34.5 | 62.5 | 9 | 44.5 | 83 | 26.8 | M10×1.5 Depth15 | 7 | 12.5 | Rc1/4 |
| 80 [3.150] | 69.5 | 11 | 47.5 | 79.5 | 11 | 57.5 | 69.5 | 11 | 47.5 | 79.5 | 11 | 57.5 | 102 | 32.8 | M14×2 Depth20 | 9 | 18 | Rc3/8 |
| 100 [3.940] | 81.5 | 12 | 57.5 | 91.5 | 12 | 67.5 | 81.5 | 12 | 57.5 | 91.5 | 12 | 67.5 | 122 | 32.8 | M18×2.5 Depth20 | 9 | 22.5 | Rc3/8 |

| Code / Bore mm [in.] | P1 | P3 | P4 | R | S | T1 | U | V | W | X | Y | Z | Appropriate through bolt※ |
|---|---|---|---|---|---|---|---|---|---|---|---|---|---|
| 6 [0.236] | $\phi$3.3 (Thru hole) C'bore $\phi$6 (Both sides) and M4×0.7 (Both sides) | 9.5 | 3.5 | — | 19 | 11 | R12 | 4 | 3.5 | — | — | — | M3 |
| 8 [0.315] | $\phi$3.3 (Thru hole) C'bore $\phi$6.2 (Both sides) and M4×0.7 (Both sides) | 9.5 | 3.5 | — | 21 | 13 | R13.5 | 5 | 4 | — | — | — | M3 |
| 10 [0.394] | $\phi$3.3 (Thru hole) C'bore $\phi$6.2 (Both sides) and M4×0.7 (Both sides) | 9.5 | 3.5 | — | 23 | 15 | R15 | 5 | 4 | — | — | — | M3 |
| 12 [0.472] | $\phi$4.3 (Thru hole) C'bore $\phi$6.5 (Both sides) and M5×0.8 (Both sides) | 9.5 | 4.5 | — | 25 | 16.3 | R16 | 6 | 5 | — | — | 1 | M3 |
| 16 [0.630] | $\phi$4.3 (Thru hole) C'bore $\phi$6.5 (Both sides) and M5×0.8 (Both sides) | 9.5 | 4.5 | — | 29 | 19.8 | R19 | 8 | 6 | — | — | 1 | M3 |
| 20 [0.787] | $\phi$4.3 (Thru hole) C'bore $\phi$6.5 (Both sides) and M5×0.8 (Both sides) | 9.5 | 4.5 | — | 34 | 24 | R22 | 10 | 8 | — | — | 1 | M3 |
| 25 [0.984] | $\phi$5.1 (Thru hole) C'bore $\phi$8 (Both sides) and M6×1 (Both sides) | 11.5 | 5.5 | — | 40 | 28 | R25 | 12 | 10 | — | — | 1 | M4 |
| 32 [1.260] | $\phi$5.1 (Thru hole) C'bore $\phi$8 (Both sides) and M6×1 (Both sides) | 11.5 | 5.5 | 4.5 | 44 | 34 | R29.5 | 16 | 14 | 15 | 13.6 | 1 | M4 |
| 40 [1.575] | $\phi$6.9 (Thru hole) C'bore $\phi$9.5 (Both sides) and M8×1.25 (Both sides) | 15.5 | 7.5 | 4.5 | 52 | 40 | R35 | 16 | 14 | 15 | 13.6 | 1.6 | M5 |
| 50 [1.969] | $\phi$6.9 (Thru hole) C'bore $\phi$11 (Both sides) and M8×1.25 (Both sides) | 16.5 | 8.5 | 8 | 62 | 48 | R41 | 20 | 17 | 21.6 | 19 | 1.6 | M6 |
| 63 [2.480] | $\phi$6.9 (Thru hole) C'bore $\phi$11 (Both sides) and M8×1.25 (Both sides) | 16.5 | 8.5 | 8 | 75 | 60 | R50 | 20 | 17 | 21.6 | 19 | 1.6 | M6 |
| 80 [3.150] | $\phi$10.5 (Thru hole) C'bore $\phi$14 (Both sides) and M12×1.75 (Both sides) | 22.5 | 10.5 | 8 | 94 | 74 | R62 | 25 | 22 | 27.6 | 25 | 1.6 | M8 |
| 100 [3.940] | $\phi$12.3 (Thru hole) C'bore $\phi$17.5 (Both sides) and M14×2 (Both sides) | 27 | 13 | 8 | 114 | 90 | R75 | 32 | 27 | 27.6 | 25 | 2 | M10 |

※ Some types of mounting screws are available (to be ordered separately). See p.209.

## Dimensions of Double Rod Single Acting Type (mm)

### ● $\phi$12～$\phi$25

CSAD Bore size

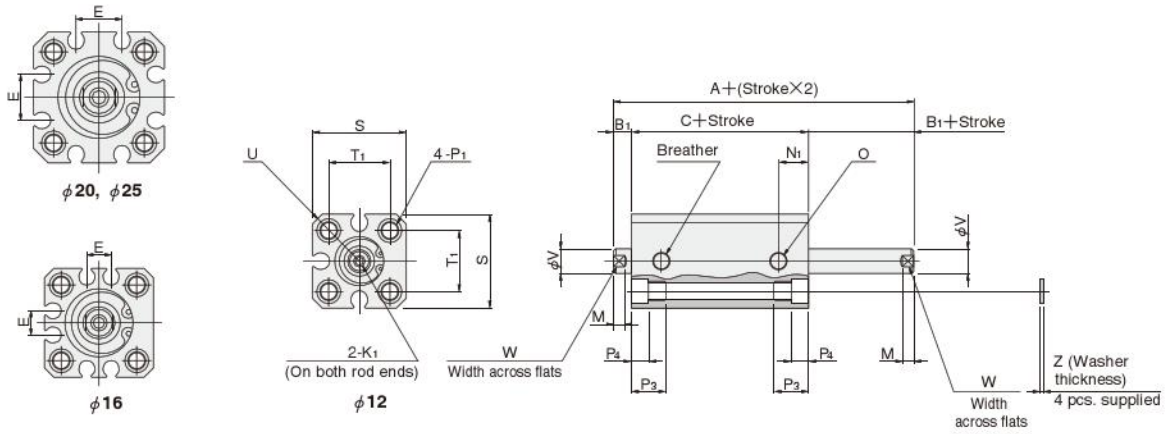


● The drawing is for $\phi$ 12.

### ● $\phi$32～$\phi$50

CSAD Bore size

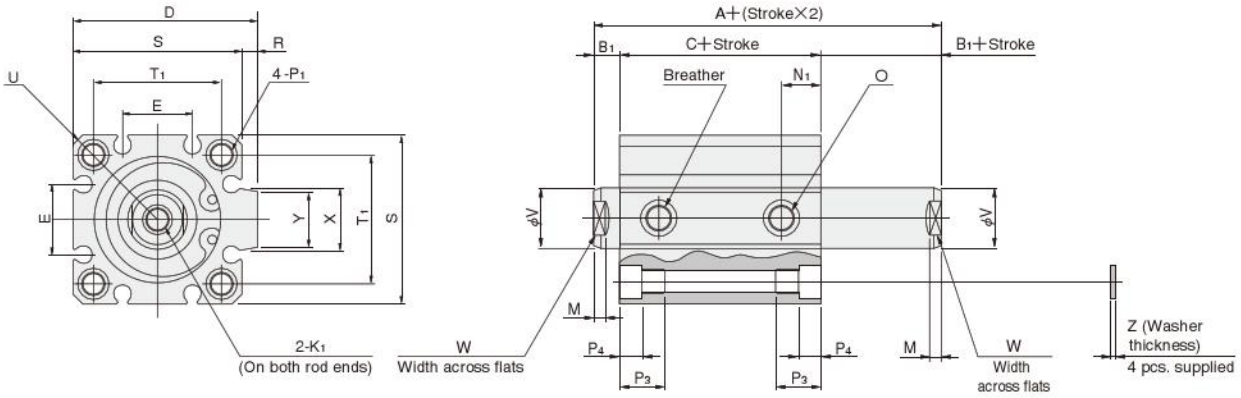


| Type / Stroke / Bore mm [in.] / Code | Standard cylinder (CSAD) | | | | | | Cylinder with magnet (CSADS) | | | | | | D | E | K1 | M | N1 | O |
|---|---|---|---|---|---|---|---|---|---|---|---|---|---|---|---|---|---|---|
| | 5～15 ($\phi$ 50: 10～20) | | | 16～30 ($\phi$ 50: 21～40) | | | 5～15 ($\phi$ 50: 10～20) | | | 16～30 ($\phi$ 50: 21～40) | | | | | | | | |
| | A | B1 | C | A | B1 | C | A | B1 | C | A | B1 | C | | | | | | |
| 12 [0.472] | 38 | 5 | 28 | 48 | 5 | 38 | 43 | 5 | 33 | 53 | 5 | 43 | — | — | M3×0.5 Depth6 | 3.5 | 8 | M5×0.8 |
| 16 [0.630] | 39 | 5.5 | 28 | 49 | 5.5 | 38 | 44 | 5.5 | 33 | 54 | 5.5 | 43 | — | 6.2 | M4×0.7 Depth8 | 3.5 | 8 | M5×0.8 |
| 20 [0.787] | 37 | 5.5 | 26 | 47 | 5.5 | 36 | 47 | 5.5 | 36 | 57 | 5.5 | 46 | — | 12.2 | M5×0.8 Depth10 | 4.5 | 9.5 | M5×0.8 |
| 25 [0.984] | 38.5 | 6 | 26.5 | 48.5 | 6 | 36.5 | 48.5 | 6 | 36.5 | 58.5 | 6 | 46.5 | — | 12.2 | M6×1 Depth10 | 5 | 10.5 | M5×0.8 |
| 32 [1.260] | 44 | 7 | 30 | 59 | 7 | 45 | 54 | 7 | 40 | 69 | 7 | 55 | 48.5 | 18.2 | M8×1.25 Depth12 | 6 | 9.5 | Rc1/8 |
| 40 [1.575] | 47 | 7 | 33 | 62 | 7 | 48 | 57 | 7 | 43 | 72 | 7 | 58 | 56.5 | 18.2 | M8×1.25 Depth12 | 6 | 10.5 | Rc1/8 |
| 50 [1.969] | 48 | 9 | 30 | 63 | 9 | 45 | 58 | 9 | 40 | 73 | 9 | 55 | 70 | 24.8 | M10×1.5 Depth15 | 7 | 11 | Rc1/4 |

| Code / Bore mm [in.] | P1 | P3 | P4 | R | S | T1 | U | V | W | X | Y | Z | Appropriate through bolt※ |
|---|---|---|---|---|---|---|---|---|---|---|---|---|---|
| 12 [0.472] | $\phi$4.3 (Thru hole) Counterbore $\phi$6.5 (Both sides) and M5×0.8 (Both sides) | 9.5 | 4.5 | — | 25 | 16.3 | R16 | 6 | 5 | — | — | 1 | M3 |
| 16 [0.630] | $\phi$4.3 (Thru hole) Counterbore $\phi$6.5 (Both sides) and M5×0.8 (Both sides) | 9.5 | 4.5 | — | 29 | 19.8 | R19 | 8 | 6 | — | — | 1 | M3 |
| 20 [0.787] | $\phi$4.3 (Thru hole) Counterbore $\phi$6.5 (Both sides) and M5×0.8 (Both sides) | 9.5 | 4.5 | — | 34 | 24 | R22 | 10 | 8 | — | — | 1 | M3 |
| 25 [0.984] | $\phi$5.1 (Thru hole) Counterbore $\phi$8 (Both sides) and M6×1 (Both sides) | 11.5 | 5.5 | — | 40 | 28 | R25 | 12 | 10 | — | — | 1 | M4 |
| 32 [1.260] | $\phi$5.1 (Thru hole) Counterbore $\phi$8 (Both sides) and M6×1 (Both sides) | 11.5 | 5.5 | 4.5 | 44 | 34 | R29.5 | 16 | 14 | 15 | 13.6 | 1 | M4 |
| 40 [1.575] | $\phi$6.9 (Thru hole) Counterbore $\phi$9.5 (Both sides) and M8×1.25 (Both sides) | 15.5 | 7.5 | 4.5 | 52 | 40 | R35 | 16 | 14 | 15 | 13.6 | 1.6 | M5 |
| 50 [1.969] | $\phi$6.9 (Thru hole) Counterbore $\phi$11 (Both sides) and M8×1.25 (Both sides) | 16.5 | 8.5 | 8 | 62 | 48 | R41 | 20 | 17 | 21.6 | 19 | 1.6 | M6 |

※ Some types of mounting screws are available (to be ordered separately). See p.209.

## Dimensions of Male Rod End Thread Specification (mm)

CAD Available in the file of each cylinder body.

### ● Double acting type, Single acting type

● $\phi$6～$\phi$25

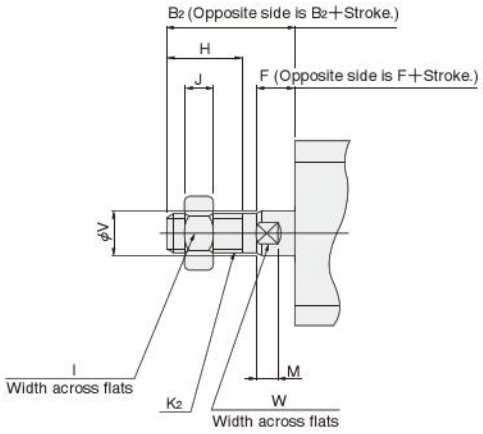


● $\phi$32～$\phi$100
(Single acting type available up to $\phi$50)

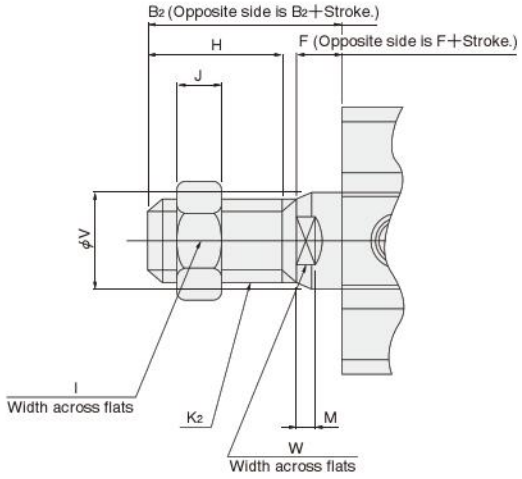


| Bore mm [in.] \ Code | $B_2$ | F | H | I | J | $K_2$ | M | V | W |
|---|---|---|---|---|---|---|---|---|---|
| **6 [0.236]** | 15 | 5 | 8 | 5.5 | 1.8 | M3×0.5 | 3 | 4 | 3.5 |
| **8 [0.315]** | 15 | 5 | 8 | 7 | 2.4 | M4×0.7 | 3 | 5 | 4 |
| **10 [0.394]** | 15 | 5 | 8 | 7 | 2.4 | M4×0.7 | 3 | 5 | 4 |
| **12 [0.472]** | 17 | 5 | 10 | 8 | 4 | M5×0.8 | 3.5 | 6 | 5 |
| **16 [0.630]** | 20.5 | 5.5 | 13 | 10 | 5 | M6×1 | 3.5 | 8 | 6 |
| **20 [0.787]** | 22.5 | 5.5 | 15 | 12 | 5 | M8×1 | 4.5 | 10 | 8 |
| **25 [0.984]** | 24 | 6 | 15 | 14 | 6 | M10×1.25 | 5 | 12 | 10 |
| **32 [1.260]** | 35 | 7 | 25 | 19 | 8 | M14×1.5 | 6 | 16 | 14 |
| **40 [1.575]** | 35 | 7 | 25 | 19 | 8 | M14×1.5 | 6 | 16 | 14 |
| **50 [1.969]** | 37 | 9 | 25 | 27 | 11 | M18×1.5 | 7 | 20 | 17 |
| **63 [2.480]** | 37 | 9 | 25 | 27 | 11 | M18×1.5 | 7 | 20 | 17 |
| **80 [3.150]** | 44 | 11 | 30 | 32 | 13 | M22×1.5 | 9 | 25 | 22 |
| **100 [3.940]** | 50 | 12 | 35 | 36 | 14 | M26×1.5 | 9 | 32 | 27 |

Remark: Cylinder joints and cylinder rod ends are available for mounting with the rod end male thread specification. For details, see p.1568.

## Dimensions of Centering Location (mm)

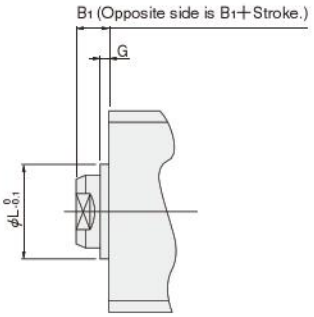


| Bore mm [in.] \ Code | $B_1$ | G | L |
|---|---|---|---|
| **16 [0.630]** | 5.5 | 1.5 | 9.4 |
| **20 [0.787]** | 5.5 | 1.5 | 12 |
| **25 [0.984]** | 6 | 2 | 15 |
| **32 [1.260]** | 7 | 2 | 21 |
| **40 [1.575]** | 7 | 2 | 29 |
| **50 [1.969]** | 9 | 2 | 38 |
| **63 [2.480]** | 9 | 2 | 40 |
| **80 [3.150]** | 11 | 2 | 45 |
| **100 [3.940]** | 12 | 2 | 55 |

●Not available for bore sizes $\phi$6, $\phi$8, $\phi$10 and $\phi$12.

# JIG CYLINDERS C SERIES TANDEM CYLINDERS

**Double Acting Type, Single Acting Push Type**

## Symbols

**● Double acting type**

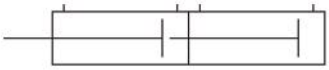

**● Single acting push type**

## Operation of Tandem Cylinders

Tandem Cylinders are a set of 2 cylinders joined end to end.

It can be used as a two-stage stroke cylinder by supplying air to either Port A or Port B. It can also obtain twice the thrust within the "stroke I" range.

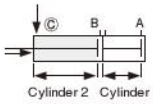


The rods retract strokes II and I when air is supplied from Port Ⓒ.

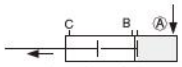


The rod moves stroke I when air is supplied from Port Ⓐ.

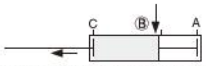


The rod moves stroke II when air is supplied from Port Ⓑ.

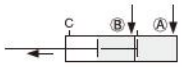


Twice the thrust is obtained within the stroke I range when air is supplied from Ports Ⓐ and Ⓑ.

## Specifications

| Item \ Bore size mm [in.] | | 12 [0.472] | 16 [0.630] | 20 [0.787] | 25 [0.984] | 32 [1.260] | 40 [1.575] | 50 [1.969] | 63 [2.480] | 80 [3.150] | 100 [3.940] |
|---|---|---|---|---|---|---|---|---|---|---|---|
| Operation type | | Double acting type, Single acting push type | | | | | | | Double acting type | | |
| Media | | Air | | | | | | | | | |
| Operating pressure range MPa [psi.] | Double acting type | 0.2～1.0 [29～145] | | | | | | 0.1～1.0 [15～145] | | | |
| | Single acting type | 0.3～1.0 [44～145] | | | | | | 0.2～1.0 [29～145] | — | | |
| Proof pressure MPa [psi.] | | 1.5 [218] | | | | | | | | | |
| Operating temperature range °C [°F] | | 0～60 [32～140] (The heat resistant specification is 120 [248]. Note1) | | | | | | | | | |
| Operating speed range mm/s [in./sec.] | Double acting type | 30～500 [1.2～19.7] | | | | | | 30～300 [1.2～11.8] | | | |
| | Single acting type | 100～500 [3.9～19.7] | | | | | | 100～300 [3.9～11.8] | — | | |
| Cushion | Double acting type | Rubber bumper (Option Note2) | | | | | | | | | |
| | Single acting type | None | | | | | | | — | | |
| Lubrication | | Not required (If lubrication is required, use Turbine Oil Class 1 [**ISO VG32**] or equivalent.) | | | | | | | | | |
| Port size | | M5×0.8 | | | | Rc1/8 | | Rc1/4 | | Rc3/8 | |

Remark: For Handling Instructions and Precautions, see p.205.

Notes: 1. For heat resistant specification, consult us.
2. Not available for heat resistant specification.

## Bore Size and Stroke

For non-standard strokes, see p.206.

mm

| Operation type | Bore size \ Stroke1 | 5 | 10 | 15 | 20 | 25 | 30 | 35 | 40 | 45 | 50 | 75 | 100 |
|---|---|---|---|---|---|---|---|---|---|---|---|---|---|
| Double acting type **CDAT CDATS** | **12, 16** | 0,5,10 15,20,25 | 0,5,10 15,20 | 0,5,10,15 | 0,5,10 | 0,5 | 0 | — | — | — | — | — | — |
| | **20, 25** | 0,5,10,15 20,25,30 35,40,45 | 0,5,10,15 20,25,30 35,40 | 0,5,10 15,20,25 30,35 | 0,5,10,15 20,25,30 | 0,5,10 15,20,25 | 0,5,10 15,20 | 0,5,10,15 | 0,5,10 | 0,5 | 0 | — | — |
| | **32, 40** | 0,5,10,15 20,25,30,35 40,45,70,95 | 0,5,10,15 20,25,30,35 40,65,90 | 0,5,10,15 20,25,30 35,60,85 | 0,5,10,15 20,25,30 55,80 | 0,5,10 15,20,25 50,75 | 0,5,10 15,20 45,70 | 0,5,10,15 40,65 | 0,5,10 35,60 | 0,5,30,55 | 0,25,50 | 0,25 | 0 |
| | **50, 63 80, 100** | — | 0,5,10,15 20,25,30,35 40,65,90 | 0,5,10,15 20,25,30 35,60,85 | 0,5,10,15 20,25,30 55,80 | 0,5,10 15,20,25 50,75 | 0,5,10,15 20,45,70 | 0,5,10,15 40,65 | 0,5,10 35,60 | 0,5,30,55 | 0,25,50 | 0,25 | 0 |
| Single acting type **CSAT CSATS** | **12, 16, 20 25, 32, 40** | 0,5,10 15,20,25 | 0,5,10 15,20 | 0,5,10,15 | 0,5,10 | 0,5 | 0 | — | — | — | — | — | — |
| | **50** | — | 0,5,10,15 20,25,30 | 0,5,10 15,20,25 | 0,5,10 15,20 | 0,5,10,15 | 0,5,10 | 0,5 | 0 | — | — | — | — |

Remarks: 1. Stroke tolerance: Stroke 1 side $^{+1}_{-0.2}$[$^{+0.039in.}_{-0.008in.}$] stroke 2 side $^{+1}_{0}$[$^{+0.039in.}_{0}$]
2. The figures in the table are combinations of stroke 2 (standard) responding to stroke 1 (standard).
3. In most cases, body cutting is used for the non-standard strokes.
However, body cutting is not used for "Stroke 1" or "Stroke 1 + Stroke 2" under the condition mentioned below. The collar packed is used for these cases.
$\phi$ 12 ～ $\phi$ 40: less than 5mm
$\phi$ 50 ～ $\phi$ 100: less than 10mm

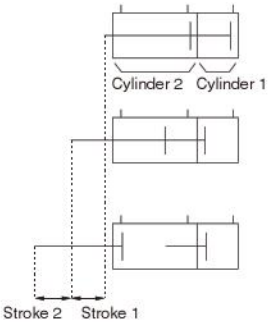


### ● About stroke 1 and stroke 2

Stroke 1 is the stroke of cylinder 1.

Stroke 2 is obtained by subtracting stroke 1 from the stroke of cylinder 2.

## Order Codes for Tandem Cylinders

**Operation type**

**DA :** Double acting type
**SA :** Single acting push type

**Rod end specification**

Female thread

Male thread

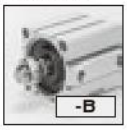


**Mounting type**

Basic type

Flange mounting type Note6

**Sensor switch type** Note5
(For cylinder with magnet)

**Blank:**
No sensor switch

**-ZE135 :** With ZE135
- 2-lead wire Solid state type
- With indicator lamp
- DC10～28V
- Horizontal lead wire

**-ZE155 :** With ZE155
- 3-lead wire Solid state type
- With indicator lamp
- DC4.5～28V
- Horizontal lead wire

**-ZE235 :** With ZE235
- 2-lead wire Solid state type
- With indicator lamp
- DC10～28V
- Vertical lead wire

**-ZE255 :** With ZE255
- 3-lead wire Solid state type
- With indicator lamp
- DC4.5～28V
- Vertical lead wire

**-ZE101 :** With ZE101
- 2-lead wire Reed switch type
- Without indicator lamp
- DC5～28V AC85～115V
- Horizontal lead wire

**-ZE102 :** With ZE102
- 2-lead wire Reed switch type
- With indicator lamp
- DC10～28V AC85～115V
- Horizontal lead wire

**-ZE201 :** With ZE201
- 2-lead wire Reed switch type
- Without indicator lamp
- DC5～28V AC85～115V
- Vertical lead wire

**-ZE202 :** With ZE202
- 2-lead wire Reed switch type
- With indicator lamp
- DC10～28V AC85～115V
- Vertical lead wire

**Lead wire length**

**A :** 1000mm [39in.]
**B :** 3000mm [118in.]

**Number of sensor switches**
(For cylinder with magnet)
**Blank:**
No sensor switch

**1 :** With 1 sensor switch
**2 :** With 2 sensor switches

**Heat resistant specification**

**Blank :** Standard cylinder Note1
**F :** Heat resistant cylinder Note2

**Tandem cylinder**

**Cylinder specification**

**Blank :** Standard cylinder Note1 (Non-ion specification)
**S :** Cylinder with magnet Note3 (Non-ion specification)

**Bumper** Note4

**Blank :** No bumper
**-R :** With bumper

**Centering location** Note7

**Blank :** No centering location
**-G :** With centering location

| Basic type | | | | | Bore size × Stroke | | | | | | | |
|---|---|---|---|---|---|---|---|---|---|---|---|---|
| C | DA<br>SA | F | T | S | Bore size<br>×<br>Stroke1<br>×<br>Stroke2 | -B Note8 | -R | -G | -3 | -ZE135<br>-ZE155<br>-ZE235<br>-ZE255<br>-ZE101<br>-ZE102<br>-ZE201<br>-ZE202 | A<br>B | 1<br>2<br>⋮<br>n |

- See table for bore size and stroke.
- Mounting brackets are included at shipping.
- For the order codes of sensor switches only, see p.199.
- For heat resistant specification, sensor switch is not available.

Notes:
1. In the standard cylinder, a magnet for the sensor switch is not built-in.
2. Not available for the cylinder with magnet or the cylinder with bumper.
3. Not available in heat resistant specification.
4. For the double acting type only. Not available for heat resistant specification.
5. For details of sensor switches, see p.1544.
6. The flange mounting bracket can be mounted on the rod side only. Moreover, it cannot be mounted on the bore size $\phi$ 40 with centering location (**-G**).
7. Not available for the bore size $\phi$ 12.
8. For information regarding the cylinder joint and cylinder rod end for male thread, see p.1568.

## Additional Parts (To be ordered separately)

Flange mounting bracket (p.198)

Mounting screws (p.209)

## Inner Construction and Major Parts

### ● Double acting type (CDAT)

### ● $\phi$12～$\phi$40

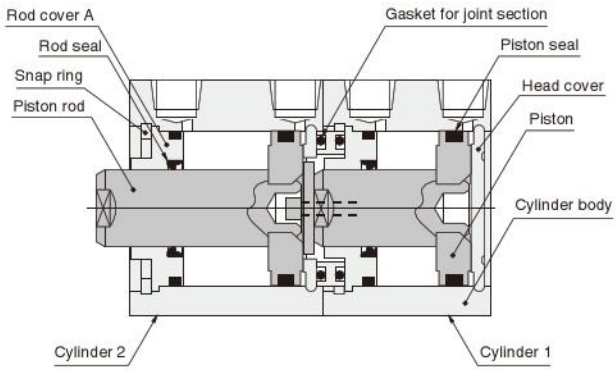


### ● $\phi$50～$\phi$100

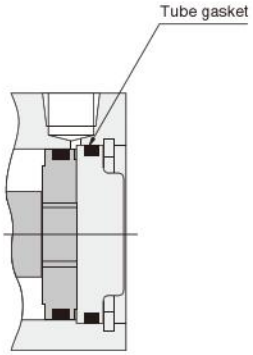


### ● Single acting push type (CSAT)

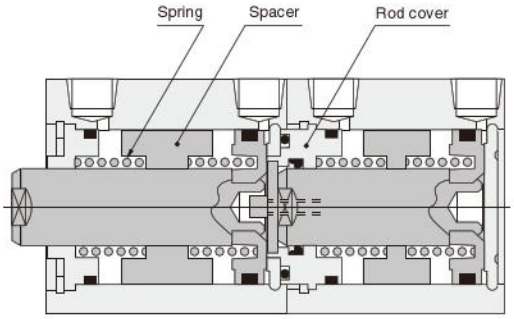


### ● Cylinder with magnet

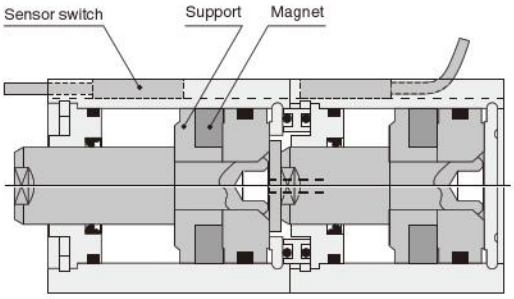


### ● With bumper

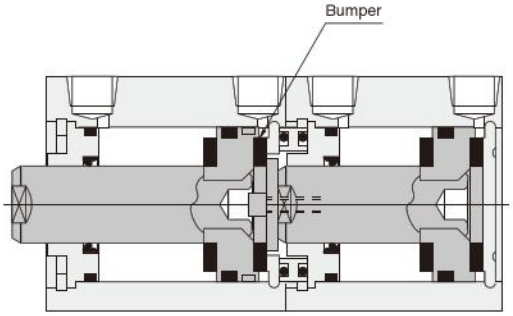


## Tandem Cylinder Air Circuit Examples

When using a tandem cylinder as a 2-stage stroke cylinder, refer to the air circuits shown below. For application of other air circuits not shown below, consult us.

### ● For mounting upward-facing cylinders

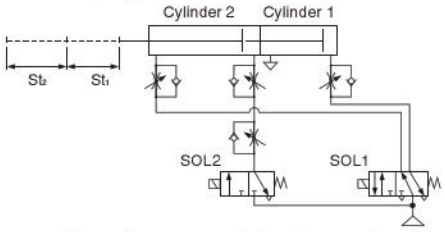


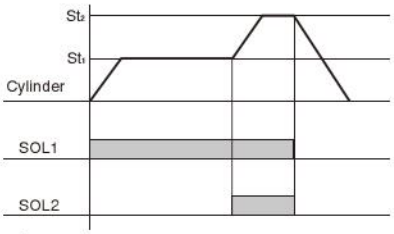


### ● For mounting downward-facing or horizontal cylinders

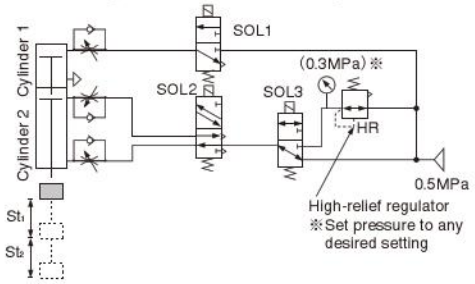


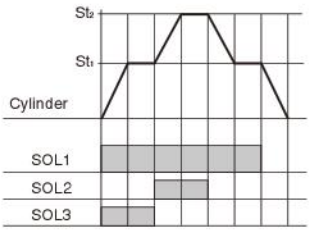

## Major Parts and Materials

| Parts \ Bore mm | ϕ 12 | ϕ 16 | ϕ 20 | ϕ 25 | ϕ 32 | ϕ 40 | ϕ 50 | ϕ 63 | ϕ 80 | ϕ 100 |
|---|---|---|---|---|---|---|---|---|---|---|
| Cylinder body | Aluminum alloy (anodized) | | | | | | | | | |
| Piston | Aluminum alloy (special rust prevention treatment) | | | | | | | | | |
| Piston rod | Stainless steel (chrome plated) | | | | Steel (chrome plated) | | | | | |
| Seal | Synthetic rubber (NBR) | | | | | | | | | |
| Rod cover | Aluminum alloy (special wear-resistant treatment) | | | | | | | | | |
| Head cover | Aluminum alloy (anodized) | | | | | | | | | |
| Snap ring | Steel (phosphate coating) | | | | | | | | | |
| Spring | Piano wire | | | | | | | — | | |
| Spacer | Aluminum alloy (special rust prevention treatment) | | | | | | | — | | |
| Bumper | Synthetic rubber (NBR; urethane for ϕ 12 only) | | | | | | | | | |
| Magnet | Plastic magnet | | | | | | | | | |
| Support | Aluminum alloy (special rust prevention treatment) | | | | | | | | | |

## Seals

| Parts / Bore mm | Rod seal | Piston seal | Tube gasket | | Gasket for joint section |
|---|---|---|---|---|---|
| | | | Rod side | Head side | |
| **ϕ 12** | MYR-6 | COP-12 | Y090260 | None | Y090119 |
| **ϕ 16** | MYR-8 | COP-16 | Y090207 | None | M202208 |
| **ϕ 20** | MYR-10 | COP-20(MYA-16) | Y090216 | None | L090134 |
| **ϕ 25** | MYR-12 | COP-25(MYA-21) | Y090210 | None | Y090196 |
| **ϕ 32** | MYR-16 | COP-32 | L090084 | None | L090015 |
| **ϕ 40** | MYR-16 | COP-40 | L090151 | None | L090028 |
| **ϕ 50** | MYR-20 | COP-50 | L090174 | L090106 | None |
| **ϕ 63** | MYR-20 | COP-63 | L090180 | L090107 | None |
| **ϕ 80** | PNY-25 | COP-80 | L090171 | L090108 | None |
| **ϕ 100** | PNY-32 | COP-100 | L090172 | L090109 | None |

Note: Items in parentheses ( ) are for the single acting type.

## Mass

### ●Double acting type

g [oz.]

| Bore size mm [in.] | Zero stroke mass Note1 | Additional mass for each 1mm [0.0394in.] of stroke1 | Additional mass for each 1mm [0.0394in.] of stroke2 | Additional mass of cylinder with bumper | Additional mass of cylinder with magnet | Mass of mounting bracket | Additional mass of sensor switch Note2 | |
|---|---|---|---|---|---|---|---|---|
| | | | | | | Flange bracket | **ZE□□□A** | **ZE□□□B** |
| **12 [0.472]** | 44.26 [1.561] | 2.68 [0.095] | 1.28 [0.045] | 13.39 [0.472] | 13.73 [0.484] | 55 [1.94] | 15 [0.53] | 35 [1.23] |
| **16 [0.630]** | 61.11 [2.156] | 3.34 [0.118] | 1.62 [0.057] | 16.71 [0.589] | 20.41 [0.720] | 71 [2.50] | | |
| **20 [0.787]** | 96.79 [3.414] | 4.63 [0.163] | 2.26 [0.080] | 23.14 [0.816] | 52.54 [1.853] | 101 [3.56] | | |
| **25 [0.984]** | 147.69 [5.210] | 6.41 [0.226] | 3.11 [0.110] | 32.05 [1.131] | 76.92 [2.713] | 160 [5.64] | | |
| **32 [1.260]** | 220.3 [7.771] | 8.43 [0.297] | 4.11 [0.145] | 42.13 [1.486] | 106.84 [3.769] | 186 [6.56] | | |
| **40 [1.575]** | 345.12 [12.174] | 9.85 [0.347] | 4.77 [0.168] | 0 | 141.38 [4.987] | 335 [11.82] | | |
| **50 [1.969]** | 562.47 [19.840] | 14.51 [0.512] | 7.03 [0.248] | 0 | 220.44 [7.776] | 447 [15.77] | | |
| **63 [2.480]** | 890.99 [31.428] | 17.83 [0.629] | 8.69 [0.307] | 0 | 322.44 [11.374] | 591 [20.85] | | |
| **80 [3.150]** | 1770.07 [62.436] | 26.91 [0.949] | 13.06 [0.461] | 0 | 497.9 [17.563] | 1414 [49.88] | | |
| **100 [3.940]** | 3252 [114.7] | 38.46 [1.357] | 18.61 [0.656] | 0 | 732.34 [25.832] | 2606 [91.92] | | |

Notes: 1. The above table is for the standard strokes.
2. Sensor switch codes A and B show the lead wire lengths.
A: 1000mm [39in.] B: 3000mm [118in.]

Calculation example: For the mass of a double acting type cylinder with magnet, bore size of 25mm, 30mm for stroke1, 10mm for stroke2, and 2 sensor switches (**ZE135A**)
147.69+(6.41×30)+(3.11×10)+76.92+(15×2)=478.01g [16.861oz.]

### ●Single acting push type

g [oz.]

| Bore size mm [in.] | Zero stroke mass Note1 | | | Additional mass for each 1mm [0.0394in.] of stroke1 | Additional mass for each 1mm [0.0394in.] of stroke2 | Additional mass of cylinder with magnet | Mass of mounting bracket | Additional mass of sensor switch Note2 | |
|---|---|---|---|---|---|---|---|---|---|
| | Stroke1 | | | | | | | | |
| | **5～15 (ϕ 50: 10～20)** | | **16～30 (ϕ 50: 21～40)** | | | | | | |
| | Stroke1+Stroke2 | | | | | | | | |
| | **5～15 (ϕ 50: 10～20)** | **16～30 (ϕ 50: 21～40)** | | | | | Flange bracket | **ZE□□□A** | **ZE□□□B** |
| **12 [0.472]** | 55.88 [1.971] | 69.98 [2.468] | 85.21 [3.006] | 2.68 [0.0945] | 1.28 [0.0451] | 16.11 [0.568] | 55 [1.94] | 15 [0.53] | 35 [1.23] |
| **16 [0.630]** | 80.31 [2.833] | 99.64 [3.515] | 120.1 [4.236] | 3.34 [0.118] | 1.62 [0.0571] | 21.21 [0.748] | 71 [2.50] | | |
| **20 [0.787]** | 96.88 [3.417] | 124.84 [4.404] | 153.93 [5.430] | 4.63 [0.163] | 2.26 [0.0797] | 51.89 [1.830] | 101 [3.56] | | |
| **25 [0.984]** | 147.45 [5.201] | 186 [6.561] | 226.53 [7.990] | 6.41 [0.226] | 3.11 [0.110] | 80.18 [2.828] | 160 [5.64] | | |
| **32 [1.260]** | 223.01 [7.866] | 306.96 [10.828] | 393.89 [13.894] | 8.43 [0.297] | 4.11 [0.145] | 103.14 [3.638] | 186 [6.56] | | |
| **40 [1.575]** | 345.03 [12.170] | 453.44 [15.994] | 566.48 [19.982] | 9.85 [0.347] | 4.77 [0.168] | 141.93 [5.006] | 335 [11.82] | | |
| **50 [1.969]** | 561.93 [19.821] | 691.19 [24.381] | 827.1 [29.175] | 14.51 [0.512] | 7.03 [0.248] | 216.54 [7.638] | 447 [15.77] | | |

Notes 1: The above table is for the standard strokes.
2: Sensor switch codes A and B show the lead wire lengths.
A: 1000mm [39in.] B: 3000mm [118in.]

Calculation example: For the mass of a single acting push type cylinder with magnet, bore size of 25mm, 10mm for stroke1, 20mm for stroke2, and 2 sensor switches (**ZE135A**)
186+(6.41×10)+(3.11×20)+80.18+(15×2)=422.48g [14.902oz.]

## Dimensions of Tandem Cylinder Double Acting Type (mm)

### ● $\phi$12～$\phi$25

CDAT Bore size

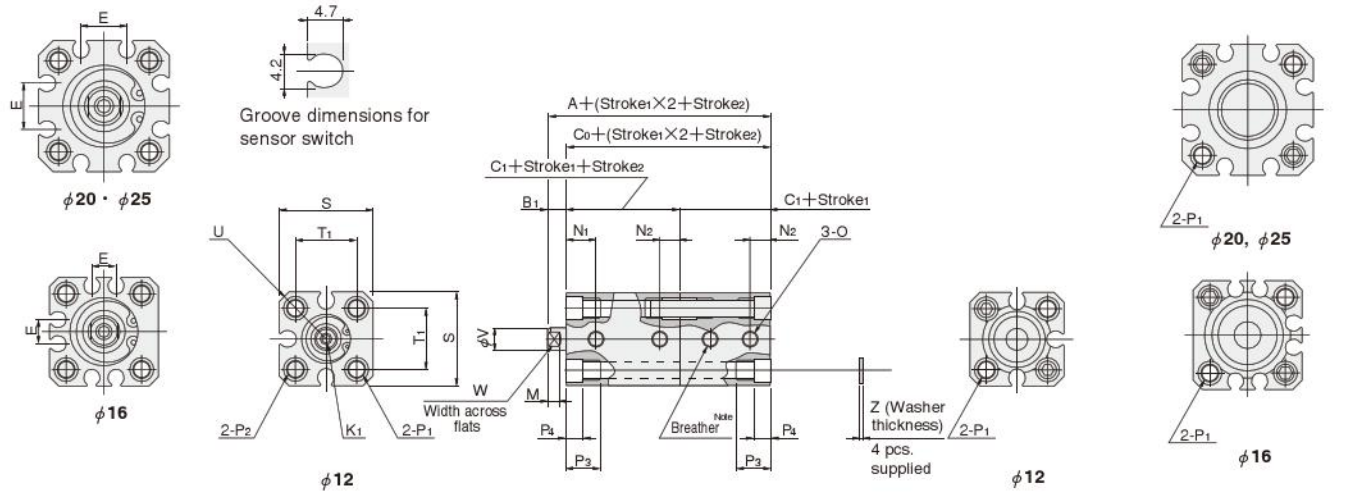


Note: Mufflers, etc. are not included.
Install a muffler when using in places exposed to dust, etc.

● The drawing is for $\phi$ 12.

### ● $\phi$32～$\phi$100

CDAT Bore size

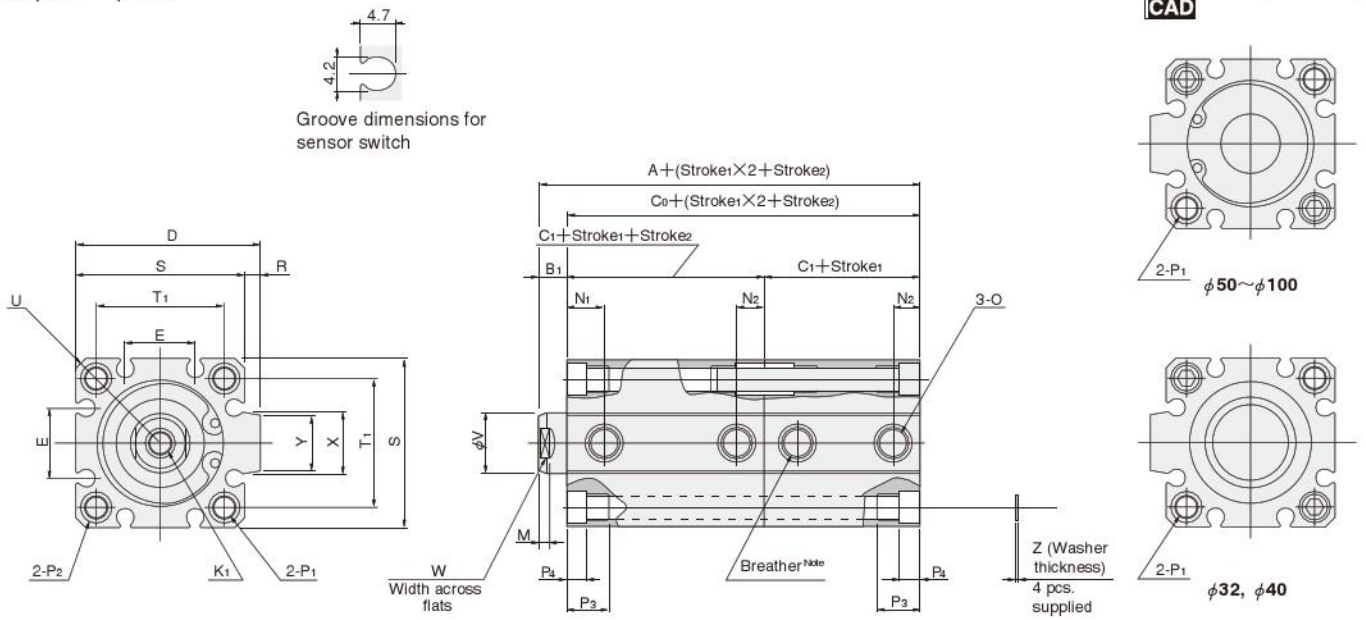


Note: Mufflers, etc. are not included.
Install a muffler when using in places exposed to dust, etc.

| Type / Code / Bore mm [in.] | Standard cylinder (CDAT) | | | | Cylinder with magnet (CDATS) | | | | Standard cylinder with bumper (CDAT-R) | | | | Cylinder with magnet with bumper (CDATS-R) | | | | D | E | $K_1$ | M | $N_1$ | $N_2$ | O |
|---|---|---|---|---|---|---|---|---|---|---|---|---|---|---|---|---|---|---|---|---|---|---|---|
| | A | $B_1$ | $C_0$ | $C_1$ | A | $B_1$ | $C_0$ | $C_1$ | A | $B_1$ | $C_0$ | $C_1$ | A | $B_1$ | $C_0$ | $C_1$ | | | | | | | |
| **12 [0.472]** | 39 | 5 | 34 | 17 | 49 | 5 | 44 | 22 | 49 | 5 | 44 | 22 | 59 | 5 | 54 | 27 | — | — | M3×0.5 Depth6 | 3.5 | 8 | 5 | M5×0.8 |
| **16 [0.630]** | 39.5 | 5.5 | 34 | 17 | 49.5 | 5.5 | 44 | 22 | 49.5 | 5.5 | 44 | 22 | 59.5 | 5.5 | 54 | 27 | — | 6.2 | M4×0.7 Depth8 | 3.5 | 8 | 5 | M5×0.8 |
| **20 [0.787]** | 44.5 | 5.5 | 39 | 19.5 | 64.5 | 5.5 | 59 | 29.5 | 54.5 | 5.5 | 49 | 24.5 | 74.5 | 5.5 | 69 | 34.5 | — | 12.2 | M5×0.8 Depth10 | 4.5 | 9.5 | 5 | M5×0.8 |
| **25 [0.984]** | 48 | 6 | 42 | 21 | 68 | 6 | 62 | 31 | 58 | 6 | 52 | 26 | 78 | 6 | 72 | 36 | — | 12.2 | M6×1 Depth10 | 5 | 10.5 | 5 | M5×0.8 |
| **32 [1.260]** | 53 | 7 | 46 | 23 | 73 | 7 | 66 | 33 | 63 | 7 | 56 | 28 | 73 | 7 | 66 | 33 | 48.5 | 18.2 | M8×1.25 Depth12 | 6 | 9.5 | 7.5(6) | Rc1/8 |
| **40 [1.575]** | 59 | 7 | 52 | 26 | 79 | 7 | 72 | 36 | 59 | 7 | 52 | 26 | 79 | 7 | 72 | 36 | 56.5 | 18.2 | M8×1.25 Depth12 | 6 | 10.5 | 7.5 | Rc1/8 |
| **50 [1.969]** | 65 | 9 | 56 | 28 | 85 | 9 | 76 | 38 | 65 | 9 | 56 | 28 | 85 | 9 | 76 | 38 | 70 | 24.8 | M10×1.5 Depth15 | 7 | 11 | 9.5 | Rc1/4 |
| **63 [2.480]** | 73 | 9 | 64 | 32 | 93 | 9 | 84 | 42 | 73 | 9 | 64 | 32 | 93 | 9 | 84 | 42 | 83 | 26.8 | M10×1.5 Depth15 | 7 | 12.5 | 11 | Rc1/4 |
| **80 [3.150]** | 93 | 11 | 82 | 41 | 113 | 11 | 102 | 51 | 93 | 11 | 82 | 41 | 113 | 11 | 102 | 51 | 102 | 32.8 | M14×2 Depth20 | 9 | 18 | 12 | Rc3/8 |
| **100 [3.940]** | 114 | 12 | 102 | 51 | 134 | 12 | 122 | 61 | 114 | 12 | 102 | 51 | 134 | 12 | 122 | 61 | 122 | 32.8 | M18×2.5 Depth20 | 9 | 22.5 | 16.5 | Rc3/8 |

| Code / Bore mm [in.] | $P_1$ | $P_2$ | $P_3$ | $P_4$ | R | S | $T_1$ | U | V | W | X | Y | Z | Appropriate through bolt※ |
|---|---|---|---|---|---|---|---|---|---|---|---|---|---|---|
| **12 [0.472]** | φ4.3 (Thru hole) C'bore φ6.5 (Both sides) and M5×0.8 (Both sides) | Counterbore φ6.5 and M5×0.8 | 9.5 | 4.5 | — | 25 | 16.3 | R16 | 6 | 5 | — | — | 1 | M3 |
| **16 [0.630]** | φ4.3 (Thru hole) C'bore φ6.5 (Both sides) and M5×0.8 (Both sides) | Counterbore φ6.5 and M5×0.8 | 9.5 | 4.5 | — | 29 | 19.8 | R19 | 8 | 6 | — | — | 1 | M3 |
| **20 [0.787]** | φ4.3 (Thru hole) C'bore φ6.5 (Both sides) and M5×0.8 (Both sides) | Counterbore φ6.5 and M5×0.8 | 9.5 | 4.5 | — | 34 | 24 | R22 | 10 | 8 | — | — | 1 | M3 |
| **25 [0.984]** | φ5.1 (Thru hole) C'bore φ8 (Both sides) and M6×1 (Both sides) | Counterbore φ8 and M6×1 | 11.5 | 5.5 | — | 40 | 28 | R25 | 12 | 10 | — | — | 1 | M4 |
| **32 [1.260]** | φ5.1 (Thru hole) C'bore φ8 (Both sides) and M6×1 (Both sides) | Counterbore φ8 and M6×1 | 11.5 | 5.5 | 4.5 | 44 | 34 | R29.5 | 16 | 14 | 15 | 13.6 | 1 | M4 |
| **40 [1.575]** | φ6.9 (Thru hole) C'bore φ9.5 (Both sides) and M8×1.25 (Both sides) | Counterbore φ9.5 and M8×1.25 | 15.5 | 7.5 | 4.5 | 52 | 40 | R35 | 16 | 14 | 15 | 13.6 | 1.6 | M5 |
| **50 [1.969]** | φ6.9 (Thru hole) C'bore φ11 (Both sides) and M8×1.25 (Both sides) | Counterbore φ11 and M8×1.25 | 16.5 | 8.5 | 8 | 62 | 48 | R41 | 20 | 17 | 21.6 | 19 | 1.6 | M6 |
| **63 [2.480]** | φ6.9 (Thru hole) C'bore φ11 (Both sides) and M8×1.25 (Both sides) | Counterbore φ11 and M8×1.25 | 16.5 | 8.5 | 8 | 75 | 60 | R50 | 20 | 17 | 21.6 | 19 | 1.6 | M6 |
| **80 [3.150]** | φ10.5 (Thru hole) C'bore φ14 (Both sides) and M12×1.75 (Both sides) | Counterbore φ14 and M12×1.75 | 22.5 | 10.5 | 8 | 94 | 74 | R62 | 25 | 22 | 27.6 | 25 | 1.6 | M8 |
| **100 [3.940]** | φ12.3 (Thru hole) C'bore φ17.5 (Both sides) and M14×2 (Both sides) | Counterbore φ17.5 and M14×2 | 27 | 13 | 8 | 114 | 90 | R75 | 32 | 27 | 27.6 | 25 | 2 | M10 |

Note: Figure in parentheses ( ) is for the standard cylinder (**CDAT**) when stroke1, or stroke1 + stroke2 is 5mm.
※Some types of mounting screws are available (to be ordered separately). See p.209.

## Dimensions of Tandem Cylinder Single Acting Push Type (mm)

### ● $\phi$12～$\phi$25

CSAT Bore size

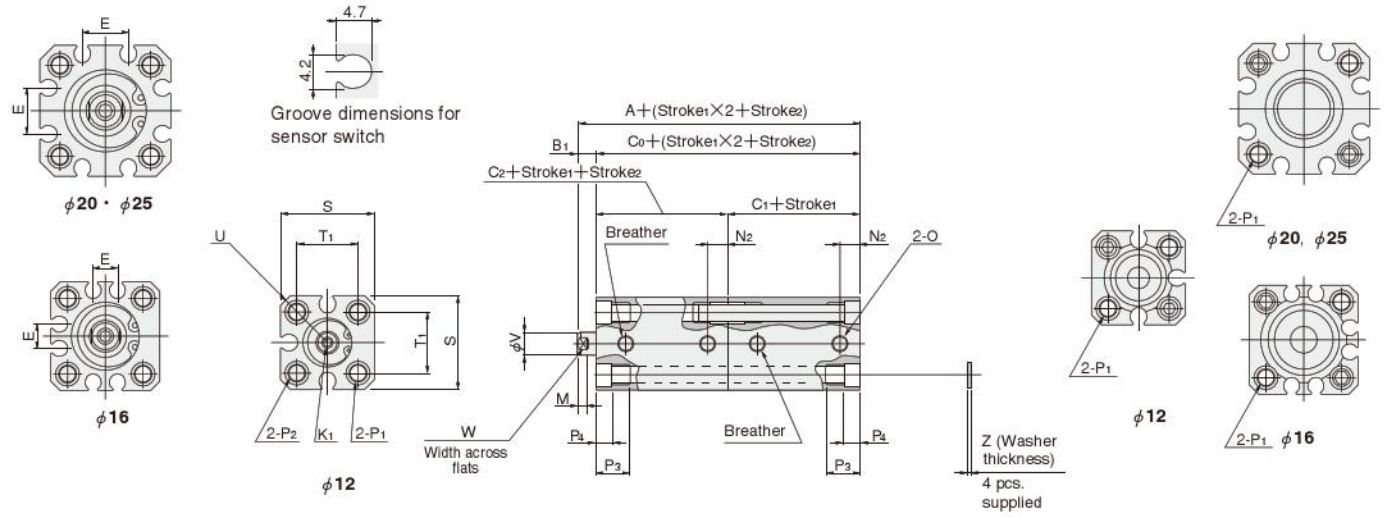


● The drawing is for $\phi$ 12.

### ● $\phi$32～$\phi$50

CSAT Bore size

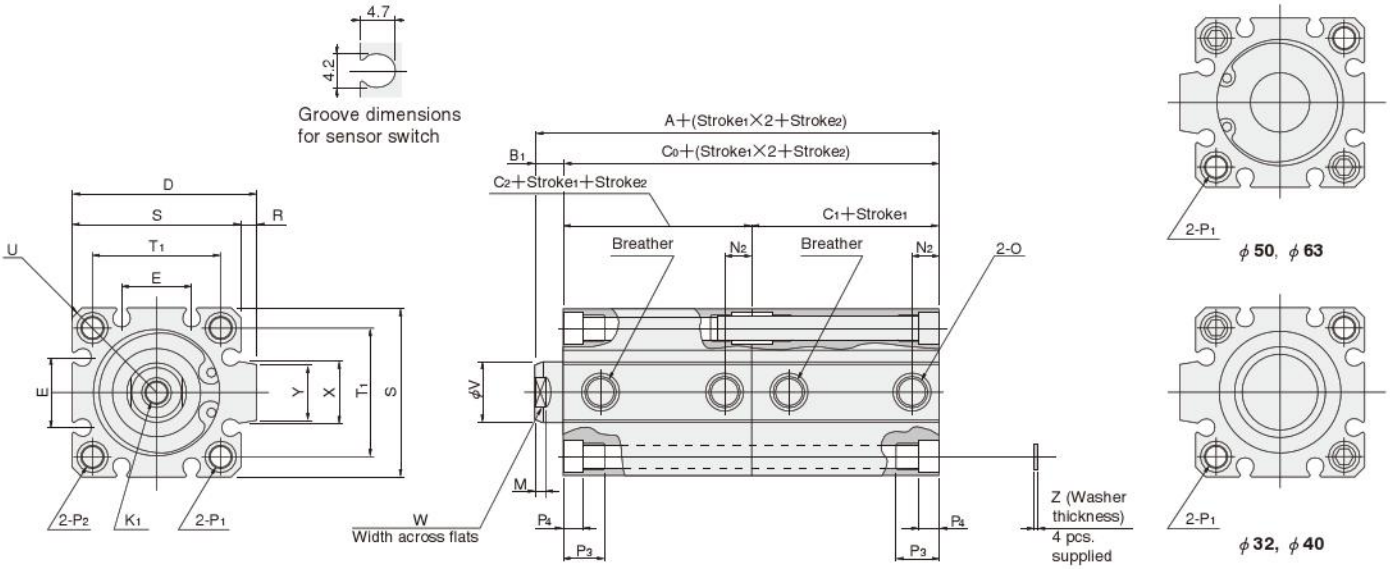

| Bore mm [in.] | Code | Standard cylinder (CSAT) 5～15 (φ50: 10～20) A | B1 | C0 | C1 | C2 | 16～30 (φ50: 21～40) A | B1 | C0 | C1 | C2 | Cylinder with magnet (CSATS) 5～15 (φ50: 10～20) A | B1 | C0 | C1 | C2 | 16～30 (φ50: 21～40) A | B1 | C0 | C1 | C2 |
|---|---|---|---|---|---|---|---|---|---|---|---|---|---|---|---|---|---|---|---|---|---|
| 12 [0.472] | D1 | 49 | 5 | 44 | 22 | 22 | — | — | — | — | — | 59 | 5 | 54 | 27 | 27 | — | — | — | — | — |
| | D2 | 59 | | 54 | | 32 | 69 | 5 | 64 | 32 | 32 | 69 | | 64 | | 37 | 79 | 5 | 74 | 37 | 37 |
| 16 [0.630] | D1 | 49.5 | 5.5 | 44 | 22 | 22 | — | — | — | — | — | 59.5 | 5.5 | 54 | 27 | 27 | — | — | — | — | — |
| | D2 | 59.5 | | 54 | | 32 | 69.5 | 5.5 | 64 | 32 | 32 | 69.5 | | 64 | | 37 | 79.5 | 5.5 | 74 | 37 | 37 |
| 20 [0.787] | D1 | 44.5 | 5.5 | 39 | 19.5 | 19.5 | — | — | — | — | — | 64.5 | 5.5 | 59 | 29.5 | 29.5 | — | — | — | — | — |
| | D2 | 54.5 | | 49 | | 29.5 | 64.5 | 5.5 | 59 | 29.5 | 29.5 | 74.5 | | 69 | | 39.5 | 84.5 | 5.5 | 79 | 39.5 | 39.5 |
| 25 [0.984] | D1 | 48 | 6 | 42 | 21 | 21 | — | — | — | — | — | 68 | 6 | 62 | 31 | 31 | — | — | — | — | — |
| | D2 | 58 | | 52 | | 31 | 68 | 6 | 62 | 31 | 31 | 78 | | 72 | | 41 | 88 | 6 | 82 | 41 | 41 |
| 32 [1.260] | D1 | 53 | 7 | 46 | 23 | 23 | — | — | — | — | — | 73 | 7 | 66 | 33 | 33 | — | — | — | — | — |
| | D2 | 68 | | 61 | | 38 | 83 | 7 | 76 | 38 | 38 | 88 | | 81 | | 48 | 103 | 7 | 96 | 48 | 48 |
| 40 [1.575] | D1 | 59 | 7 | 52 | 26 | 26 | — | — | — | — | — | 79 | 7 | 72 | 36 | 36 | — | — | — | — | — |
| | D2 | 74 | | 67 | | 41 | 89 | 7 | 82 | 41 | 41 | 94 | | 87 | | 51 | 109 | 7 | 102 | 51 | 51 |
| 50 [1.969] | D1 | 65 | 9 | 56 | 28 | 28 | — | — | — | — | — | 85 | 9 | 76 | 38 | 38 | — | — | — | — | — |
| | D2 | 80 | | 71 | | 43 | 95 | 9 | 86 | 43 | 43 | 100 | | 91 | | 53 | 115 | 9 | 106 | 53 | 53 |

| Bore mm [in.] | Code | D | E | K1 | M | N2 | O | P1 |
|---|---|---|---|---|---|---|---|---|
| 12 [0.472] | D1 | — | — | M3×0.5 Depth6 | 3.5 | 5 | M5×0.8 | φ4.3 (Thru hole) Counterbore φ6.5 (Both sides) and M5×0.8 (Both sides) |
| | D2 | | | | | | | |
| 16 [0.630] | D1 | — | 6.2 | M4×0.7 Depth8 | 3.5 | 5 | M5×0.8 | φ4.3 (Thru hole) Counterbore φ6.5 (Both sides) and M5×0.8 (Both sides) |
| | D2 | | | | | | | |
| 20 [0.787] | D1 | — | 12.2 | M5×0.8 Depth10 | 4.5 | 5 | M5×0.8 | φ4.3 (Thru hole) Counterbore φ6.5 (Both sides) and M5×0.8 (Both sides) |
| | D2 | | | | | | | |
| 25 [0.984] | D1 | — | 12.2 | M6×1 Depth10 | 5 | 5 | M5×0.8 | φ5.1 (Thru hole) Counterbore φ8 (Both sides) and M6×1 (Both sides) |
| | D2 | | | | | | | |
| 32 [1.260] | D1 | 48.5 | 18.2 | M8×1.25 Depth12 | 6 | 7.5 | Rc1/8 | φ5.1 (Thru hole) Counterbore φ8 (Both sides) and M6×1 (Both sides) |
| | D2 | | | | | | | |
| 40 [1.575] | D1 | 56.5 | 18.2 | M8×1.25 Depth12 | 6 | 7.5 | Rc1/8 | φ6.9 (Thru hole) Counterbore φ9.5 (Both sides) and M8×1.25 (Both sides) |
| | D2 | | | | | | | |
| 50 [1.969] | D1 | 70 | 24.8 | M10×1.5 Depth15 | 7 | 9.5 | Rc1/4 | φ6.9 (Thru hole) Counterbore φ11 (Both sides) and M8×1.25 (Both sides) |
| | D2 | | | | | | | |

| Bore mm [in.] | Code | P2 | P3 | P4 | R | S | T1 | U | V | W | X | Y | Z | Appropriate through bolt※ |
|---|---|---|---|---|---|---|---|---|---|---|---|---|---|---|
| 12 [0.472] | D1 | Counterbore φ6.5 and M5×0.8 | 9.5 | 4.5 | — | 25 | 16.3 | R16 | 6 | 5 | — | — | 1 | M3 |
| | D2 | | | | | | | | | | | | | |
| 16 [0.630] | D1 | Counterbore φ6.5 and M5×0.8 | 9.5 | 4.5 | — | 29 | 19.8 | R19 | 8 | 6 | — | — | 1 | M3 |
| | D2 | | | | | | | | | | | | | |
| 20 [0.787] | D1 | Counterbore φ6.5 and M5×0.8 | 9.5 | 4.5 | — | 34 | 24 | R22 | 10 | 8 | — | — | 1 | M3 |
| | D2 | | | | | | | | | | | | | |
| 25 [0.984] | D1 | Counterbore φ8 and M6×1 | 11.5 | 5.5 | — | 40 | 28 | R25 | 12 | 10 | — | — | 1 | M4 |
| | D2 | | | | | | | | | | | | | |
| 32 [1.260] | D1 | Counterbore φ8 and M6×1 | 11.5 | 5.5 | 4.5 | 44 | 34 | R29.5 | 16 | 14 | 15 | 13.6 | 1 | M4 |
| | D2 | | | | | | | | | | | | | |
| 40 [1.575] | D1 | Counterbore φ9.5 and M8×1.25 | 15.5 | 7.5 | 4.5 | 52 | 40 | R35 | 16 | 14 | 15 | 13.6 | 1.6 | M5 |
| | D2 | | | | | | | | | | | | | |
| 50 [1.969] | D1 | Counterbore φ11 and M8×1.25 | 16.5 | 8.5 | 8 | 62 | 48 | R41 | 20 | 17 | 21.6 | 19 | 1.6 | M6 |
| | D2 | | | | | | | | | | | | | |

Notes: D1 is when stroke1 + stroke2 is 5～15 (φ50: 10～20) mm.
D2 is when stroke1 + stroke2 is 16～30 (φ50: 21～40) mm.
※ Some types of mounting screws are available (to be ordered separately). See p.209.

## Dimensions of Male Rod End Thread Specification (mm)

CAD Available in the file of each cylinder body.

### ● Double acting type, Single acting push type

● $\phi$12～$\phi$25

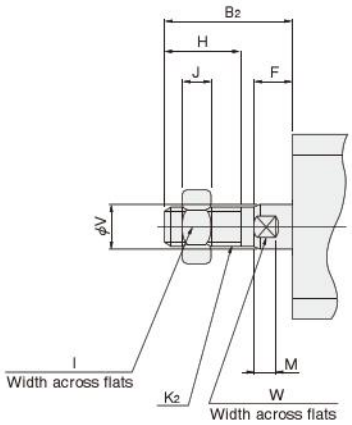


● $\phi$32～$\phi$100
(Single acting type available up to $\phi$50)

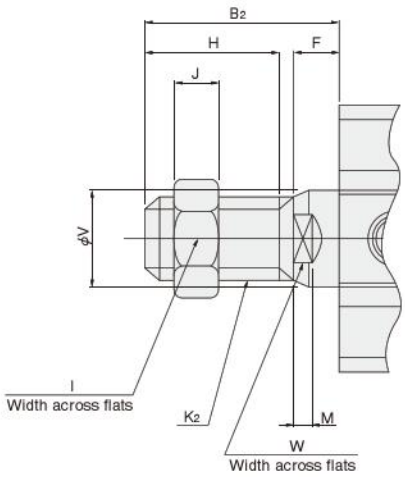


| Bore mm [in.] \ Code | $B_2$ | F | H | I | J | $K_2$ | M | V | W |
|---|---|---|---|---|---|---|---|---|---|
| **12 [0.472]** | 17 | 5 | 10 | 8 | 4 | M5×0.8 | 3.5 | 6 | 5 |
| **16 [0.630]** | 20.5 | 5.5 | 13 | 10 | 5 | M6×1 | 3.5 | 8 | 6 |
| **20 [0.787]** | 22.5 | 5.5 | 15 | 12 | 5 | M8×1 | 4.5 | 10 | 8 |
| **25 [0.984]** | 24 | 6 | 15 | 14 | 6 | M10×1.25 | 5 | 12 | 10 |
| **32 [1.260]** | 35 | 7 | 25 | 19 | 8 | M14×1.5 | 6 | 16 | 14 |
| **40 [1.575]** | 35 | 7 | 25 | 19 | 8 | M14×1.5 | 6 | 16 | 14 |
| **50 [1.969]** | 37 | 9 | 25 | 27 | 11 | M18×1.5 | 7 | 20 | 17 |
| **63 [2.480]** | 37 | 9 | 25 | 27 | 11 | M18×1.5 | 7 | 20 | 17 |
| **80 [3.150]** | 44 | 11 | 30 | 32 | 13 | M22×1.5 | 9 | 25 | 22 |
| **100 [3.940]** | 50 | 12 | 35 | 36 | 14 | M26×1.5 | 9 | 32 | 27 |

Remark: Cylinder joints and cylinder rod ends are available for mounting with the rod end male thread specification. For details, see p.1568.

## Dimensions of Centering Location (mm)

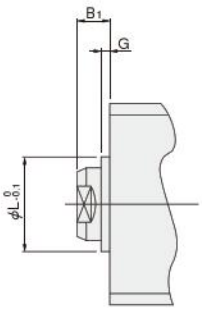


●Not available for bore size $\phi$12.

| Bore mm [in.] \ Code | $B_1$ | G | L |
|---|---|---|---|
| **16 [0.630]** | 5.5 | 1.5 | 9.4 |
| **20 [0.787]** | 5.5 | 1.5 | 12 |
| **25 [0.984]** | 6 | 2 | 15 |
| **32 [1.260]** | 7 | 2 | 21 |
| **40 [1.575]** | 7 | 2 | 29 |
| **50 [1.969]** | 9 | 2 | 38 |
| **63 [2.480]** | 9 | 2 | 40 |
| **80 [3.150]** | 11 | 2 | 45 |
| **100 [3.940]** | 12 | 2 | 55 |

# JIG CYLINDERS C SERIES DUAL STROKE CYLINDERS

**Double Acting Type, Single Acting Push Type, Single Acting Pull Type**

## Symbols

● **Double acting type** ● **Single acting push type** ● **Single acting pull type**

## Operation of Dual Stroke Cylinders

Dual Stroke Cylinders are a set of 2 cylinders connected back to back.
The cylinder body can be secured in place and each stroke can be controlled separately. It can also be used to obtain 2-stage or 3-stage strokes by securing the piston rod on one side in place.

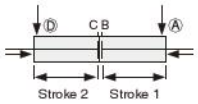


The rods retract stroke 1 and stroke 2 when air is supplied from Ports Ⓐ and Ⓓ.

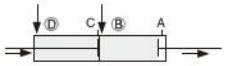


The rod moves stroke 1 when air is supplied from Ports Ⓑ and Ⓓ.

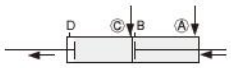


The rod moves stroke 2 when air is supplied from Ports Ⓐ and Ⓒ.

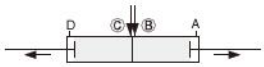


The rod moves stroke 1 and stroke 2 when air is supplied from Ports Ⓑ and Ⓒ.

## Specifications

| Item \ Bore size mm [in.] | | 12 [0.472] | 16 [0.630] | 20 [0.787] | 25 [0.984] | 32 [1.260] | 40 [1.575] | 50 [1.969] | 63 [2.480] | 80 [3.150] | 100 [3.940] |
|---|---|---|---|---|---|---|---|---|---|---|---|
| Operation type | | Double acting type, Single acting push type, Single acting pull type | | | | | | | Double acting type | | |
| Media | | Air | | | | | | | | | |
| Operating pressure range MPa [psi.] | Double acting type | 0.1～1.0 [15～145] | | | | | | 0.05～1.0 [7～145] | | | |
| | Single acting type | 0.15～1.0 Note1 [22～145] | | | | | | 0.1～1.0 [15～145] | — | | |
| Proof pressure MPa [psi.] | | 1.5 [218] | | | | | | | | | |
| Operating temperature range °C [°F] | | 0～60 [32～140] (The heat resistant specification is 120 [248]. Note2) | | | | | | | | | |
| Operating speed range mm/s [in./sec.] | Double acting type | 30～500 [1.2～19.7] | | | | | | 30～300 [1.2～11.8] | | | |
| | Single acting type | 100～500 [3.9～19.7] | | | | | | 100～300 [3.9～11.8] | — | | |
| Cushion | Double acting type | Rubber bumper (Option Note2) | | | | | | | | | |
| | Single acting type | None | | | | | | | — | | |
| Lubrication | | Not required (If lubrication is required, use Turbine Oil Class 1 [**ISO VG32**] or equivalent.) | | | | | | | | | |
| Port size | | M5×0.8 | | | | Rc1/8 | | Rc1/4 | | Rc3/8 | |

Remark: For Handling Instructions and Precautions, see p.205.
Notes: 1. The single acting pull type of $\phi$ 12 is 0.18～1.0MPa [26～145psi.].
2. For heat resistant specification, consult us.
3. Not available for heat resistant specification.

## Bore Size and Stroke

For non-standard strokes, see p.206.

mm

| Operation type | Bore size | Standard strokes | |
|---|---|---|---|
| | | Standard cylinder | Cylinder with magnet |
| Double acting type | 12 | 5, 10, 15, 20, 25, 30 | 5, 10, 15, 20, 25, 30 |
| | 16 | | |
| | 20 | 5, 10, 15, 20, 25, 30, 35, 40, 45, 50 | 5, 10, 15, 20, 25, 30, 35, 40, 45, 50 |
| | 25 | | |
| | 32 | 5, 10, 15, 20, 25, 30, 35, 40, 45, 50, 75, 100 | 5, 10, 15, 20, 25, 30, 35, 40, 45, 50, 75, 100 |
| | 40 | | |
| | 50 | 10, 15, 20, 25, 30, 35, 40, 45, 50, 75, 100 | 10, 15, 20, 25, 30, 35, 40, 45, 50, 75, 100 |
| | 63 | | |
| | 80 | | |
| | 100 | | |
| Single acting type | 12 | 5, 10, 15, 20, 25, 30 | 5, 10, 15, 20, 25, 30 |
| | 16 | | |
| | 20 | | |
| | 25 | | |
| | 32 | | |
| | 40 | | |
| | 50 | 10, 15, 20, 25, 30, 35, 40 | 10, 15, 20, 25, 30, 35, 40 |

Remarks: 1. Stroke tolerance $^{+1}_{0}$ [$^{+0.039in.}_{0}$]
2. In most cases, body cutting is used for the non-standard strokes.
However, body cutting is not used for strokes of less than 5mm for $\phi$ 12～$\phi$ 40, and strokes of less than 10mm for $\phi$ 50～$\phi$ 100. The collar packed is used for these cases.

## Order Codes for Dual Stroke Cylinders

**Operation type**

**DA :** Double acting type
**SA :** Single acting push type
**TA :** Single acting pull type

**Rod end specification**

Female thread

Male thread

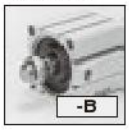


**Mounting type**

Basic type

Flange mounting type Note6

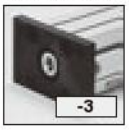


**Sensor switch type** Note5
(For cylinder with magnet)

**Blank:**
No sensor switch

**-ZE135 :** With ZE135
- 2-lead wire Solid state type
- With indicator lamp
- DC10～28V
- Horizontal lead wire

**-ZE155 :** With ZE155
- 3-lead wire Solid state type
- With indicator lamp
- DC4.5～28V
- Horizontal lead wire

**-ZE235 :** With ZE235
- 2-lead wire Solid state type
- With indicator lamp
- DC10～28V
- Vertical lead wire

**-ZE255 :** With ZE255
- 3-lead wire Solid state type
- With indicator lamp
- DC4.5～28V
- Vertical lead wire

**-ZE101 :** With ZE101
- 2-lead wire Reed switch type
- Without indicator lamp
- DC5～28V AC85～115V
- Horizontal lead wire

**-ZE102 :** With ZE102
- 2-lead wire Reed switch type
- With indicator lamp
- DC10～28V AC85～115V
- Horizontal lead wire

**-ZE201 :** With ZE201
- 2-lead wire Reed switch type
- Without indicator lamp
- DC5～28V AC85～115V
- Vertical lead wire

**-ZE202 :** With ZE202
- 2-lead wire Reed switch type
- With indicator lamp
- DC10～28V AC85～115V
- Vertical lead wire

**Lead wire length**

**A :** 1000mm [39in.]
**B :** 3000mm [118in.]

**Number of sensor switches**
(For cylinder with magnet)
**Blank:**
No sensor switch

**1 :** With 1 sensor switch
**2 :** With 2 sensor switches

**Heat resistant specification**

**Blank :** Standard cylinder Note1
**F :** Heat resistant cylinder Note2

**Dual stroke cylinder**

**Cylinder specification**

**Blank :** Standard cylinder Note1 (Non-ion specification)
**S :** Cylinder with magnet Note3 (Non-ion specification)

**Bumper** Note4

**Blank :** No bumper
**-R :** With bumper

**Centering location** Note7

**Blank :** No centering location
**-G :** With centering location

| Basic type | | | | | Bore size × Stroke | | | | | | | |
|---|---|---|---|---|---|---|---|---|---|---|---|---|
| C | DA<br>SA<br>TA | F | W | S | Bore size<br>×<br>Stroke1<br>×<br>Stroke2 | -B Note8 | -R | -G | -3 | -ZE135<br>-ZE155<br>-ZE235<br>-ZE255<br>-ZE101<br>-ZE102<br>-ZE201<br>-ZE202 | A<br>B | 1<br>2<br>⋮<br>n |

● See table for bore size and stroke.

● Mounting brackets are included at shipping.

● For the order codes of sensor switches only, see p.199.

Notes: 1. In the standard cylinder, a magnet for the sensor switch is not built-in.
2. Not available for the cylinder with magnet or the cylinder with bumper.
3. Not available in heat resistant specification.
4. For the double acting type only. Not available for heat resistant specification.
5. For details of sensor switches, see p.1544.
6. The flange mounting bracket can be mounted on the end of cylinder 2 only. Moreover, it cannot be mounted on the bore size $\phi$ 40 with centering location (**-G**).
7. Not available for the bore size $\phi$ 12.
8. For information regarding the cylinder joint and cylinder rod end for male thread, see p.1568.

## Additional Parts (To be ordered separately)

Flange mounting bracket (p.198)

Mounting screws (p.209)

## Inner Construction and Major Parts

### ● Double acting type (CDAW)

● $\phi$12～$\phi$40

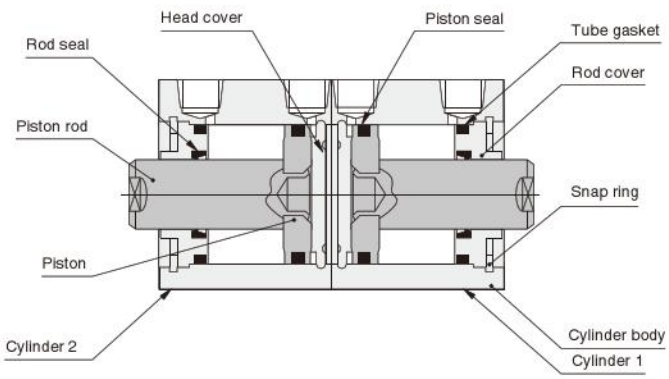


● $\phi$50～$\phi$100

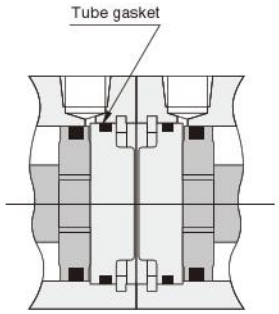


### ● Single acting push type (CSAW)

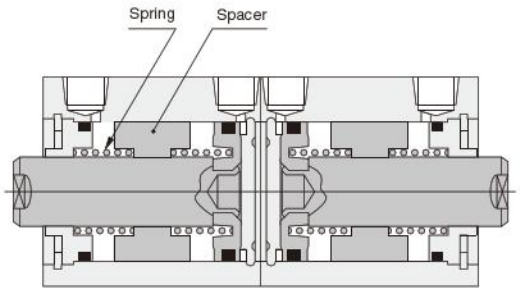


### ● Single acting pull type (CTAW)

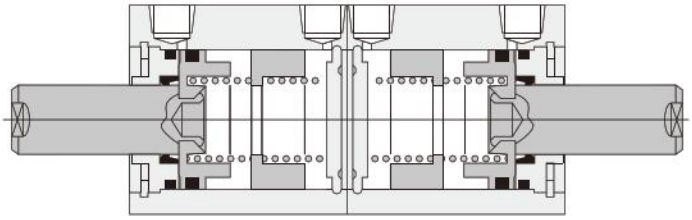

### ● Cylinder with magnet

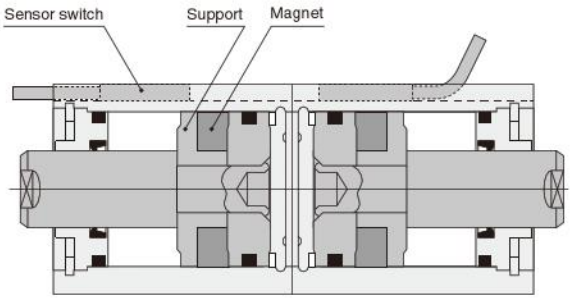


### ● With bumper

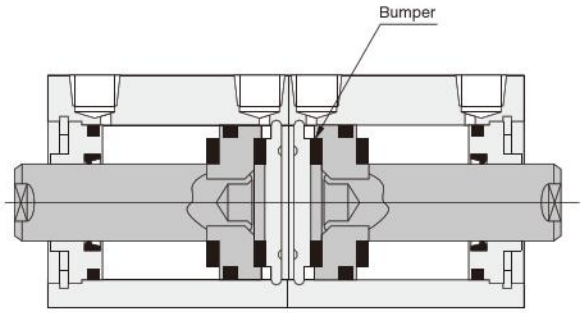


## Major Parts and Materials

| Parts \ Bore mm | $\phi$ 12 | $\phi$ 16 | $\phi$ 20 | $\phi$ 25 | $\phi$ 32 | $\phi$ 40 | $\phi$ 50 | $\phi$ 63 | $\phi$ 80 | $\phi$ 100 |
|---|---|---|---|---|---|---|---|---|---|---|
| Cylinder body | Aluminum alloy (anodized) | | | | | | | | | |
| Piston | Aluminum alloy (special rust prevention treatment) | | | | | | | | | |
| Piston rod | Stainless steel (chrome plated) | | | | Steel (chrome plated) | | | | | |
| Seal | Synthetic rubber (NBR) | | | | | | | | | |
| Rod cover | Aluminum alloy (special wear-resistant treatment) | | | | | | | | | |
| Head cover | Aluminum alloy (anodized) | | | | | | | | | |
| Snap ring | Steel (phosphate coating) | | | | | | | | | |
| Spring | Piano wire | | | | | | | — | | |
| Spacer | Aluminum alloy (special rust prevention treatment) | | | | | | | — | | |
| Bumper | Synthetic rubber (NBR; urethane for $\phi$ 12 only) | | | | | | | | | |
| Magnet | Plastic magnet | | | | | | | | | |
| Support | Aluminum alloy (special rust prevention treatment) | | | | | | | | | |

## Seals

| Parts / Bore mm | Rod seal | Piston seal | Tube gasket | |
|---|---|---|---|---|
| | | | Rod side | Head side |
| $\phi$ 12 | MYR-6 | COP-12 | Y090260 | None |
| $\phi$ 16 | MYR-8 | COP-16 | Y090207 | None |
| $\phi$ 20 | MYR-10 | COP-20(MYA-16) | Y090216 | None |
| $\phi$ 25 | MYR-12 | COP-25(MYA-21) | Y090210 | None |
| $\phi$ 32 | MYR-16 | COP-32 | L090084 | None |
| $\phi$ 40 | MYR-16 | COP-40 | L090151 | None |
| $\phi$ 50 | MYR-20 | COP-50 | L090174 | L090106 |
| $\phi$ 63 | MYR-20 | COP-63 | L090180 | L090107 |
| $\phi$ 80 | PNY-25 | COP-80 | L090171 | L090108 |
| $\phi$ 100 | PNY-32 | COP-100 | L090172 | L090109 |

Note: Items in parentheses ( ) are for the single acting type.

# Mass

## Dual stroke

### ● Double acting type

g [oz.]

| Bore size mm [in.] | Zero stroke mass Note1 | Additional mass for each 1mm [0.0394in.] of stroke1 | Additional mass for each 1mm [0.0394in.] of stroke2 | Additional mass of cylinder with bumper | Additional mass of cylinder with magnet | Mass of mounting bracket | Additional mass of sensor switch Note2 | |
|---|---|---|---|---|---|---|---|---|
| | | | | | | Flange bracket | ZE□□□A | ZE□□□B |
| **12 [0.472]** | 44.26 [1.561] | 1.4 [0.0494] | 1.28 [0.0451] | 13.39 [0.472] | 13.73 [0.484] | 55 [1.94] | 15 [0.53] | 35 [1.23] |
| **16 [0.630]** | 61.11 [2.156] | 1.73 [0.0610] | 1.62 [0.0571] | 16.71 [0.589] | 20.41 [0.720] | 71 [2.50] | | |
| **20 [0.787]** | 96.79 [3.414] | 2.37 [0.0836] | 2.26 [0.0797] | 23.14 [0.816] | 52.54 [1.853] | 101 [3.56] | | |
| **25 [0.984]** | 147.69 [5.210] | 3.3 [0.116] | 3.11 [0.110] | 32.05 [1.131] | 76.92 [2.713] | 160 [5.64] | | |
| **32 [1.260]** | 220.3 [7.771] | 4.31 [0.152] | 4.11 [0.145] | 42.13 [1.486] | 106.84 [3.769] | 186 [6.56] | | |
| **40 [1.575]** | 345.12 [12.174] | 5.08 [0.179] | 4.77 [0.168] | 0 | 141.38 [4.987] | 335 [11.82] | | |
| **50 [1.969]** | 562.47 [19.840] | 7.48 [0.264] | 7.03 [0.248] | 0 | 220.44 [7.776] | 447 [15.77] | | |
| **63 [2.480]** | 896.12 [31.609] | 9.14 [0.322] | 8.69 [0.307] | 0 | 322.4 [11.37] | 591 [20.85] | | |
| **80 [3.150]** | 1755.88 [61.936] | 13.51 [0.477] | 13.06 [0.461] | 0 | 494.4 [17.44] | 1414 [49.88] | | |
| **100 [3.940]** | 3207.76 [113.15] | 19.06 [0.672] | 18.61 [0.656] | 0 | 724.4 [25.55] | 2606 [91.92] | | |

Notes 1: The above table is for the standard strokes.
2: Sensor switch codes A and B show the lead wire lengths.
A: 1000mm [39in.] B: 3000mm [118in.]

Calculation example: For the mass of a double acting type cylinder with magnet, bore size of 25mm, 30mm for stroke 1, 10mm for stroke 2, and with 2 sensor switches (**ZE135A**)
147.69＋(3.3×30)＋(3.11×10)＋76.92＋(15×2)＝384.71g [13.570oz.]

## Dual stroke

### ● Single acting push type

g [oz.]

| Bore size mm [in.] | Zero stroke mass Note1 | | | | Additional mass for each 1mm [0.0394in.] of stroke1 | Additional mass for each 1mm [0.0394in.] of stroke2 | Additional mass of cylinder with magnet | Mass of mounting bracket | Additional mass of sensor switch Note2 | |
|---|---|---|---|---|---|---|---|---|---|---|
| | Stroke1 | | | | | | | | | |
| | **5～15 (φ 50: 10～20)** | | **16～30 (φ 50: 21～40)** | | | | | | | |
| | Stroke2 | | | | | | | Flange bracket | ZE□□□A | ZE□□□B |
| | 5～15 (φ 50: 10～20) | 16～30 (φ 50: 21～40) | 5～15 (φ 50: 10～20) | 16～30 (φ 50: 21～40) | | | | | | |
| **12 [0.472]** | 55.88 [1.971] | 69.98 [2.468] | 71.1 [2.508] | 85.21 [3.006] | 1.4 [0.0494] | 1.28 [0.0451] | 16.11 [0.568] | 55 [1.94] | 15 [0.53] | 35 [1.23] |
| **16 [0.630]** | 80.31 [2.833] | 99.64 [3.515] | 100.76 [3.554] | 120.1 [4.236] | 1.73 [0.0610] | 1.62 [0.0571] | 21.21 [0.748] | 71 [2.50] | | |
| **20 [0.787]** | 96.88 [3.417] | 124.84 [4.404] | 125.96 [4.443] | 153.93 [5.430] | 2.37 [0.0836] | 2.26 [0.0797] | 51.89 [1.830] | 101 [3.56] | | |
| **25 [0.984]** | 147.45 [5.201] | 186 [6.561] | 187.98 [6.631] | 226.53 [7.990] | 3.3 [0.116] | 3.11 [0.110] | 80.18 [2.828] | 160 [5.64] | | |
| **32 [1.260]** | 223.01 [7.866] | 306.96 [10.828] | 309.93 [10.932] | 393.89 [13.894] | 4.31 [0.152] | 4.11 [0.145] | 103.14 [3.638] | 186 [6.56] | | |
| **40 [1.575]** | 345.03 [12.170] | 453.44 [15.994] | 458.06 [16.157] | 566.48 [19.982] | 5.08 [0.179] | 4.77 [0.168] | 141.93 [5.006] | 335 [11.82] | | |
| **50 [1.969]** | 561.93 [19.821] | 691.19 [24.381] | 697.85 [24.616] | 827.1 [29.175] | 7.48 [0.264] | 7.03 [0.248] | 216.54 [7.638] | 447 [15.77] | | |

Notes 1: The above table is for the standard strokes.
2: Sensor switch codes A and B show the lead wire lengths.
A: 1000mm [39in.] B: 3000mm [118in.]

Calculation example: For the mass of a single acting push type cylinder with magnet, bore size of 25mm, 20mm for stroke 1, 20mm for stroke 2, and with 2 sensor switches (**ZE135A**)
226.53＋(3.3×20)＋(3.11×20)＋80.18＋(15×2)＝464.91g [16.399oz.]

## Dual stroke

### ● Single acting pull type

g [oz.]

| Bore size mm [in.] | Zero stroke mass Note1 | | | | Additional mass for each 1mm [0.0394in.] of stroke1 | Additional mass for each 1mm [0.0394in.] of stroke2 | Additional mass of cylinder with magnet | Mass of mounting bracket | Additional mass of sensor switch Note2 | |
|---|---|---|---|---|---|---|---|---|---|---|
| | Stroke1 | | | | | | | | | |
| | **5～15 (φ 50: 10～20)** | | **16～30 (φ 50: 21～40)** | | | | | | | |
| | Stroke2 | | | | | | | Flange bracket | ZE□□□A | ZE□□□B |
| | 5～15 (φ 50: 10～20) | 16～30 (φ 50: 21～40) | 5～15 (φ 50: 10～20) | 16～30 (φ 50: 21～40) | | | | | | |
| **12 [0.472]** | 54.88 [1.936] | 66.76 [2.355] | 67.88 [2.394] | 79.77 [2.814] | 1.4 [0.0494] | 1.28 [0.0451] | 17.67 [0.623] | 55 [1.94] | 15 [0.53] | 35 [1.23] |
| **16 [0.630]** | 78.77 [2.778] | 94.15 [3.321] | 95.27 [3.360] | 110.66 [3.903] | 1.73 [0.0610] | 1.62 [0.0571] | 23.31 [0.822] | 71 [2.50] | | |
| **20 [0.787]** | 117.58 [4.147] | 139.48 [4.920] | 140.6 [4.959] | 162.49 [5.732] | 2.37 [0.0836] | 2.26 [0.0797] | 53.74 [1.896] | 101 [3.56] | | |
| **25 [0.984]** | 175.72 [6.198] | 205.63 [7.253] | 207.61 [7.323] | 237.52 [8.378] | 3.3 [0.116] | 3.11 [0.110] | 78.89 [2.783] | 160 [5.64] | | |
| **32 [1.260]** | 255.75 [9.021] | 316.83 [11.176] | 319.8 [11.280] | 380.88 [13.435] | 4.31 [0.152] | 4.11 [0.145] | 105.39 [3.717] | 186 [6.56] | | |
| **40 [1.575]** | 395.6 [13.954] | 480.5 [16.949] | 485.12 [17.112] | 570.02 [20.107] | 5.08 [0.179] | 4.77 [0.168] | 138.9 [4.899] | 335 [11.82] | | |
| **50 [1.969]** | 634.13 [22.368] | 726.4 [25.623] | 733.06 [25.857] | 825.32 [29.112] | 7.48 [0.264] | 7.03 [0.248] | 144.56 [5.099] | 447 [15.77] | | |

Notes 1: The above table is for the standard strokes.
2: Sensor switch codes A and B show the lead wire lengths.
A: 1000mm [39in.] B: 3000mm [118in.]

Calculation example: For the mass of a single acting pull type cylinder with magnet, bore size of 25mm, 20mm for stroke 1, 20mm for stroke 2, and with 2 sensor switches (**ZE135A**)
237.52＋(3.3×20)＋(3.11×20)＋78.89＋(15×2)＝474.61g [16.741oz.]

## Dimensions of Dual Stroke Double Acting Type (mm)

### ● $\phi$12～$\phi$25

CAD CDAW Bore size

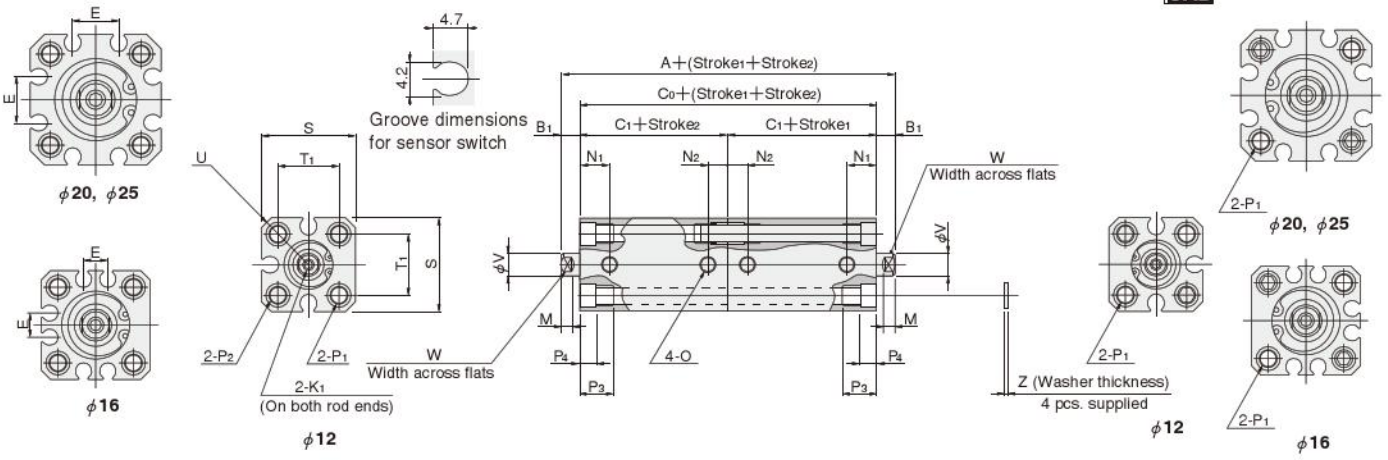


●The drawing is for $\phi$ 12.

### ● $\phi$32～$\phi$100

CAD CDAW Bore size

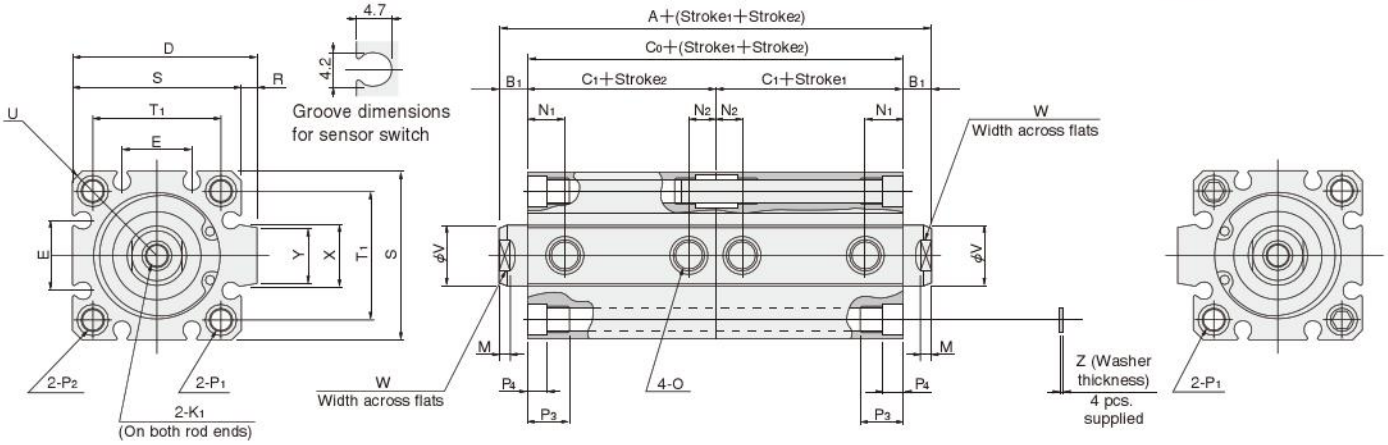


| Type / Bore mm [in.] / Code | Standard cylinder (CDAW) | | | | Cylinder with magnet (CDAWS) | | | | Standard cylinder with bumper (CDAW-R) | | | | Cylinder with magnet and bumper (CDAWS-R) | | | | D | E | K1 | M | N1 | N2 | O |
|---|---|---|---|---|---|---|---|---|---|---|---|---|---|---|---|---|---|---|---|---|---|---|---|
| | A | B1 | C0 | C1 | A | B1 | C0 | C1 | A | B1 | C0 | C1 | A | B1 | C0 | C1 | | | | | | | |
| 12 [0.472] | 44 | 5 | 34 | 17 | 54 | 5 | 44 | 22 | 54 | 5 | 44 | 22 | 64 | 5 | 54 | 27 | — | — | M3X0.5 Depth6 | 3.5 | 8 | 5 | M5X0.8 |
| 16 [0.630] | 45 | 5.5 | 34 | 17 | 55 | 5.5 | 44 | 22 | 55 | 5.5 | 44 | 22 | 65 | 5.5 | 54 | 27 | — | 6.2 | M4X0.7 Depth8 | 3.5 | 8 | 5 | M5X0.8 |
| 20 [0.787] | 50 | 5.5 | 39 | 19.5 | 70 | 5.5 | 59 | 29.5 | 60 | 5.5 | 49 | 24.5 | 80 | 5.5 | 69 | 34.5 | — | 12.2 | M5X0.8 Depth10 | 4.5 | 9.5 | 5 | M5X0.8 |
| 25 [0.984] | 54 | 6 | 42 | 21 | 74 | 6 | 62 | 31 | 64 | 6 | 52 | 26 | 84 | 6 | 72 | 36 | — | 12.2 | M6X1 Depth10 | 5 | 10.5 | 5 | M5X0.8 |
| 32 [1.260] | 60 | 7 | 46 | 23 | 80 | 7 | 66 | 33 | 70 | 7 | 56 | 28 | 80 | 7 | 66 | 33 | 48.5 | 18.2 | M8X1.25 Depth12 | 6 | 9.5 | 7.5(6) | Rc1/8 |
| 40 [1.575] | 66 | 7 | 52 | 26 | 86 | 7 | 72 | 36 | 66 | 7 | 52 | 26 | 86 | 7 | 72 | 36 | 56.5 | 18.2 | M8X1.25 Depth12 | 6 | 10.5 | 7.5 | Rc1/8 |
| 50 [1.969] | 74 | 9 | 56 | 28 | 94 | 9 | 76 | 38 | 74 | 9 | 56 | 28 | 94 | 9 | 76 | 38 | 70 | 24.8 | M10X1.5 Depth15 | 7 | 11 | 9.5 | Rc1/4 |
| 63 [2.480] | 82 | 9 | 64 | 32 | 102 | 9 | 84 | 42 | 82 | 9 | 64 | 32 | 102 | 9 | 84 | 42 | 83 | 26.8 | M10X1.5 Depth15 | 7 | 12.5 | 11 | Rc1/4 |
| 80 [3.150] | 104 | 11 | 82 | 41 | 124 | 11 | 102 | 51 | 104 | 11 | 82 | 41 | 124 | 11 | 102 | 51 | 102 | 32.8 | M14X2 Depth20 | 9 | 18 | 12 | Rc3/8 |
| 100 [3.940] | 126 | 12 | 102 | 51 | 146 | 12 | 122 | 61 | 126 | 12 | 102 | 51 | 146 | 12 | 122 | 61 | 122 | 32.8 | M18X2.5 Depth20 | 9 | 22.5 | 16.5 | Rc3/8 |

| Bore mm [in.] / Code | P1 | P2 | P3 | P4 | R | S | T1 | U | V | W | X | Y | Z | Appropriate through bolt※ |
|---|---|---|---|---|---|---|---|---|---|---|---|---|---|---|
| 12 [0.472] | $\phi$4.3 (Thru hole) C'bore $\phi$6.5 (Both sides) and M5X0.8 (Both sides) | Counterbore $\phi$6.5 and M5X0.8 | 9.5 | 4.5 | — | 25 | 16.3 | R16 | 6 | 5 | — | — | 1 | M3 |
| 16 [0.630] | $\phi$4.3 (Thru hole) C'bore $\phi$6.5 (Both sides) and M5X0.8 (Both sides) | Counterbore $\phi$6.5 and M5X0.8 | 9.5 | 4.5 | — | 29 | 19.8 | R19 | 8 | 6 | — | — | 1 | M3 |
| 20 [0.787] | $\phi$4.3 (Thru hole) C'bore $\phi$6.5 (Both sides) and M5X0.8 (Both sides) | Counterbore $\phi$6.5 and M5X0.8 | 9.5 | 4.5 | — | 34 | 24 | R22 | 10 | 8 | — | — | 1 | M3 |
| 25 [0.984] | $\phi$5.1 (Thru hole) C'bore $\phi$8 (Both sides) and M6X1 (Both sides) | Counterbore $\phi$8 and M6X1 | 11.5 | 5.5 | — | 40 | 28 | R25 | 12 | 10 | — | — | 1 | M4 |
| 32 [1.260] | $\phi$5.1 (Thru hole) C'bore $\phi$8 (Both sides) and M6X1 (Both sides) | Counterbore $\phi$8 and M6X1 | 11.5 | 5.5 | 4.5 | 44 | 34 | R29.5 | 16 | 14 | 15 | 13.6 | 1 | M4 |
| 40 [1.575] | $\phi$6.9 (Thru hole) C'bore $\phi$9.5 (Both sides) and M8X1.25 (Both sides) | Counterbore $\phi$9.5 and M8X1.25 | 15.5 | 7.5 | 4.5 | 52 | 40 | R35 | 16 | 14 | 15 | 13.6 | 1.6 | M5 |
| 50 [1.969] | $\phi$6.9 (Thru hole) C'bore $\phi$11 (Both sides) and M8X1.25 (Both sides) | Counterbore $\phi$11 and M8X1.25 | 16.5 | 8.5 | 8 | 62 | 48 | R41 | 20 | 17 | 21.6 | 19 | 1.6 | M6 |
| 63 [2.480] | $\phi$6.9 (Thru hole) C'bore $\phi$11 (Both sides) and M8X1.25 (Both sides) | Counterbore $\phi$11 and M8X1.25 | 16.5 | 8.5 | 8 | 75 | 60 | R50 | 20 | 17 | 21.6 | 19 | 1.6 | M6 |
| 80 [3.150] | $\phi$10.5 (Thru hole) C'bore $\phi$14 (Both sides) and M12X1.75 (Both sides) | Counterbore $\phi$14 and M12X1.75 | 22.5 | 10.5 | 8 | 94 | 74 | R62 | 25 | 22 | 27.6 | 25 | 1.6 | M8 |
| 100 [3.940] | $\phi$12.3 (Thru hole) C'bore $\phi$17.5 (Both sides) and M14X2 (Both sides) | Counterbore $\phi$17.5and M14X2 | 27 | 13 | 8 | 114 | 90 | R75 | 32 | 27 | 27.6 | 25 | 2 | M10 |

Note: Figure in parentheses ( ) is for the standard cylinder (**CDAW**) with 5mm stroke.
※Some types of mounting screws are available (to be ordered separately). See p.209.

## Dimensions of Dual Stroke Single Acting Push Type (mm)

### ● $\phi$12～$\phi$25

CSAW Bore size

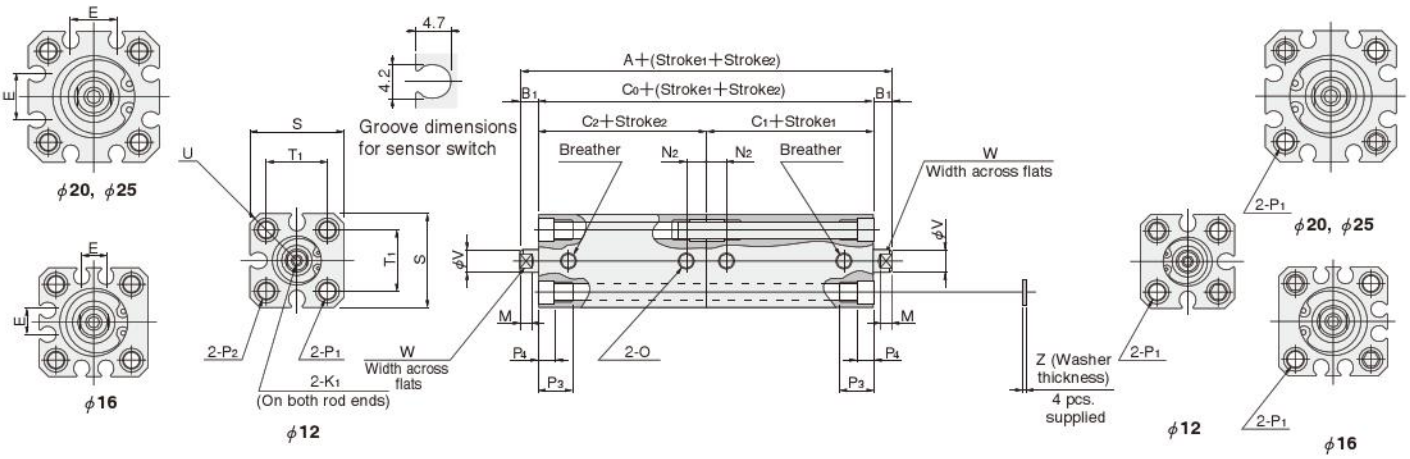


● The drawing is for $\phi$ 12.

### ● $\phi$32～$\phi$50

CSAW Bore size

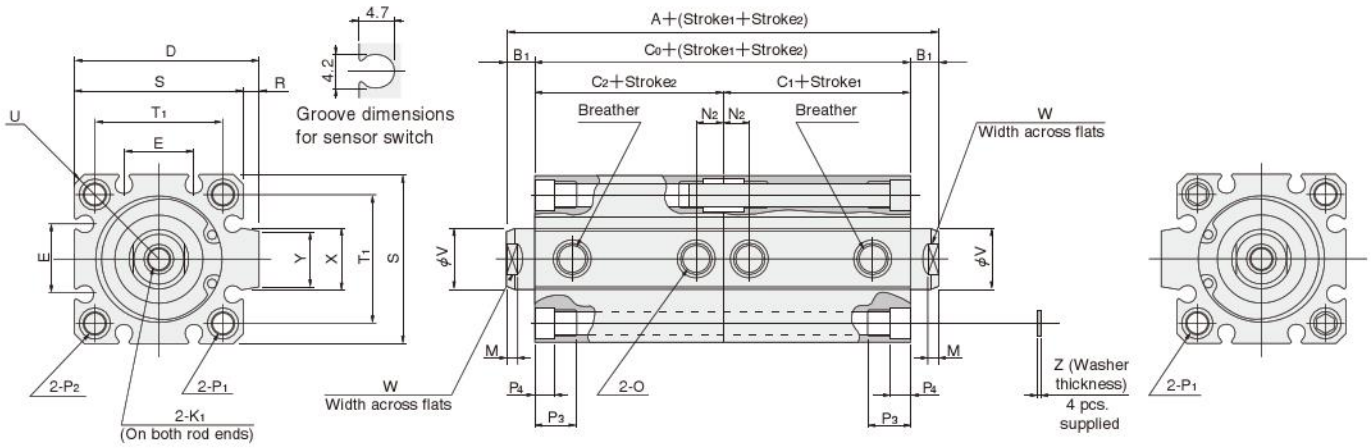

| Bore mm [in.] | Code | Standard cylinder (CSAW) | | | | | | | | | | Cylinder with magnet (CSAWS) | | | | | | | | | |
|---|---|---|---|---|---|---|---|---|---|---|---|---|---|---|---|---|---|---|---|---|---|
| | Stroke1 | 5～15 (φ50: 10～20) | | | | | 16～30 (φ50: 21～40) | | | | | 5～15 (φ50: 10～20) | | | | | 16～30 (φ50: 21～40) | | | | |
| | | A | $B_1$ | $C_0$ | $C_1$ | $C_2$ | A | $B_1$ | $C_0$ | $C_1$ | $C_2$ | A | $B_1$ | $C_0$ | $C_1$ | $C_2$ | A | $B_1$ | $C_0$ | $C_1$ | $C_2$ |
| 12 [0.472] | D1 | 54 | 5 | 44 | 22 | 22 | 64 | 5 | 54 | 32 | 22 | 64 | 5 | 54 | 27 | 27 | 74 | 5 | 64 | 37 | 27 |
| | D2 | 64 | | 54 | | 32 | 74 | | 64 | | 32 | 74 | | 64 | | 37 | 84 | | 74 | | 37 |
| 16 [0.630] | D1 | 55 | 5.5 | 44 | 22 | 22 | 65 | 5.5 | 54 | 32 | 22 | 65 | 5.5 | 54 | 27 | 27 | 75 | 5.5 | 64 | 37 | 27 |
| | D2 | 65 | | 54 | | 32 | 75 | | 64 | | 32 | 75 | | 64 | | 37 | 85 | | 74 | | 37 |
| 20 [0.787] | D1 | 50 | 5.5 | 39 | 19.5 | 19.5 | 60 | 5.5 | 49 | 29.5 | 19.5 | 70 | 5.5 | 59 | 29.5 | 29.5 | 80 | 5.5 | 69 | 39.5 | 29.5 |
| | D2 | 60 | | 49 | | 29.5 | 70 | | 59 | | 29.5 | 80 | | 69 | | 39.5 | 90 | | 79 | | 39.5 |
| 25 [0.984] | D1 | 54 | 6 | 42 | 21 | 21 | 64 | 6 | 52 | 31 | 21 | 74 | 6 | 62 | 31 | 31 | 84 | 6 | 72 | 41 | 31 |
| | D2 | 64 | | 52 | | 31 | 74 | | 62 | | 31 | 84 | | 72 | | 41 | 94 | | 82 | | 41 |
| 32 [1.260] | D1 | 60 | 7 | 46 | 23 | 23 | 75 | 7 | 61 | 38 | 23 | 80 | 7 | 66 | 33 | 33 | 95 | 7 | 81 | 48 | 33 |
| | D2 | 75 | | 61 | | 38 | 90 | | 76 | | 38 | 95 | | 81 | | 48 | 110 | | 96 | | 48 |
| 40 [1.575] | D1 | 66 | 7 | 52 | 26 | 26 | 81 | 7 | 67 | 41 | 26 | 86 | 7 | 72 | 36 | 36 | 101 | 7 | 87 | 51 | 36 |
| | D2 | 81 | | 67 | | 41 | 96 | | 82 | | 41 | 101 | | 87 | | 51 | 116 | | 102 | | 51 |
| 50 [1.969] | D1 | 74 | 9 | 56 | 28 | 28 | 89 | 9 | 71 | 43 | 28 | 94 | 9 | 76 | 38 | 38 | 109 | 9 | 91 | 53 | 38 |
| | D2 | 89 | | 71 | | 43 | 104 | | 86 | | 43 | 109 | | 91 | | 53 | 124 | | 106 | | 53 |

| Bore mm [in.] | Code | D | E | $K_1$ | M | $N_2$ | O | $P_1$ |
|---|---|---|---|---|---|---|---|---|
| 12 [0.472] | D1 | — | — | M3×0.5 Depth6 | 3.5 | 5 | M5×0.8 | φ4.3 (Thru hole) Counterbore φ6.5 (Both sides) and M5×0.8 (Both sides) |
| | D2 | | | | | | | |
| 16 [0.630] | D1 | — | 6.2 | M4×0.7 Depth8 | 3.5 | 5 | M5×0.8 | φ4.3 (Thru hole) Counterbore φ6.5 (Both sides) and M5×0.8 (Both sides) |
| | D2 | | | | | | | |
| 20 [0.787] | D1 | — | 12.2 | M5×0.8 Depth10 | 4.5 | 5 | M5×0.8 | φ4.3 (Thru hole) Counterbore φ6.5 (Both sides) and M5×0.8 (Both sides) |
| | D2 | | | | | | | |
| 25 [0.984] | D1 | — | 12.2 | M6×1 Depth10 | 5 | 5 | M5×0.8 | φ5.1 (Thru hole) Counterbore φ8 (Both sides) and M6×1 (Both sides) |
| | D2 | | | | | | | |
| 32 [1.260] | D1 | 48.5 | 18.2 | M8×1.25 Depth12 | 6 | 7.5 | Rc1/8 | φ5.1 (Thru hole) Counterbore φ8 (Both sides) and M6×1 (Both sides) |
| | D2 | | | | | | | |
| 40 [1.575] | D1 | 56.5 | 18.2 | M8×1.25 Depth12 | 6 | 7.5 | Rc1/8 | φ6.9 (Thru hole) Counterbore φ9.5 (Both sides) and M8×1.25 (Both sides) |
| | D2 | | | | | | | |
| 50 [1.969] | D1 | 70 | 24.8 | M10×1.5 Depth15 | 7 | 9.5 | Rc1/4 | φ6.9 (Thru hole) Counterbore φ11 (Both sides) and M8×1.25 (Both sides) |
| | D2 | | | | | | | |

| Bore mm [in.] | Code | $P_2$ | $P_3$ | $P_4$ | R | S | $T_1$ | U | V | W | X | Y | Z | Appropriate through bolt※ |
|---|---|---|---|---|---|---|---|---|---|---|---|---|---|---|
| 12 [0.472] | D1 | Counterbore φ6.5 and M5×0.8 | 9.5 | 4.5 | — | 25 | 16.3 | R16 | 6 | 5 | — | — | 1 | M3 |
| | D2 | | | | | | | | | | | | | |
| 16 [0.630] | D1 | Counterbore φ6.5 and M5×0.8 | 9.5 | 4.5 | — | 29 | 19.8 | R19 | 8 | 6 | — | — | 1 | M3 |
| | D2 | | | | | | | | | | | | | |
| 20 [0.787] | D1 | Counterbore φ6.5 and M5×0.8 | 9.5 | 4.5 | — | 34 | 24 | R22 | 10 | 8 | — | — | 1 | M3 |
| | D2 | | | | | | | | | | | | | |
| 25 [0.984] | D1 | Counterbore φ8 and M6×1 | 11.5 | 5.5 | — | 40 | 28 | R25 | 12 | 10 | — | — | 1 | M4 |
| | D2 | | | | | | | | | | | | | |
| 32 [1.260] | D1 | Counterbore φ8 and M6×1 | 11.5 | 5.5 | 4.5 | 44 | 34 | R29.5 | 16 | 14 | 15 | 13.6 | 1 | M4 |
| | D2 | | | | | | | | | | | | | |
| 40 [1.575] | D1 | Counterbore φ9.5 and M8×1.25 | 15.5 | 7.5 | 4.5 | 52 | 40 | R35 | 16 | 14 | 15 | 13.6 | 1.6 | M5 |
| | D2 | | | | | | | | | | | | | |
| 50 [1.969] | D1 | Counterbore φ11 and M8×1.25 | 16.5 | 8.5 | 8 | 62 | 48 | R41 | 20 | 17 | 21.6 | 19 | 1.6 | M6 |
| | D2 | | | | | | | | | | | | | |

Note: D1 is when stroke 2 is 5～15 (φ50: 10～20)mm.
D2 is when stroke 2 is 16～30 (φ50: 21～40)mm.
※ Some types of mounting screws are available (to be ordered separately). See p.209.

## Dimensions of Dual Stroke Single Acting Pull Type (mm)

### ● $\phi$12～$\phi$25

CAD CTAW Bore size

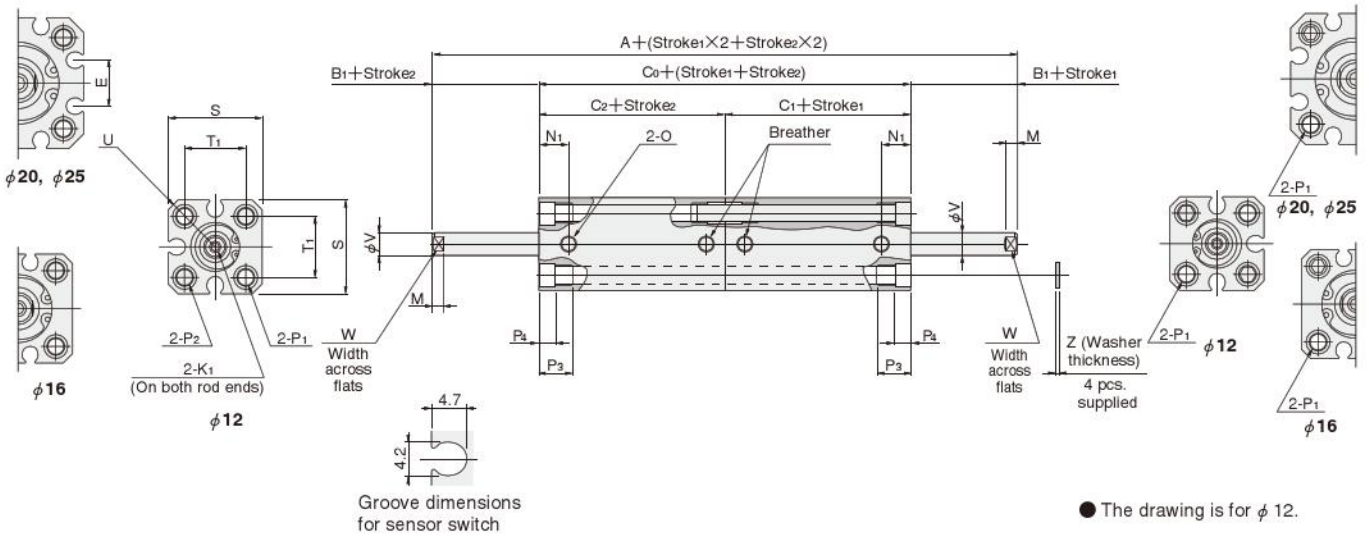


● The drawing is for $\phi$ 12.

### ● $\phi$32～$\phi$50

CAD CTAW Bore size

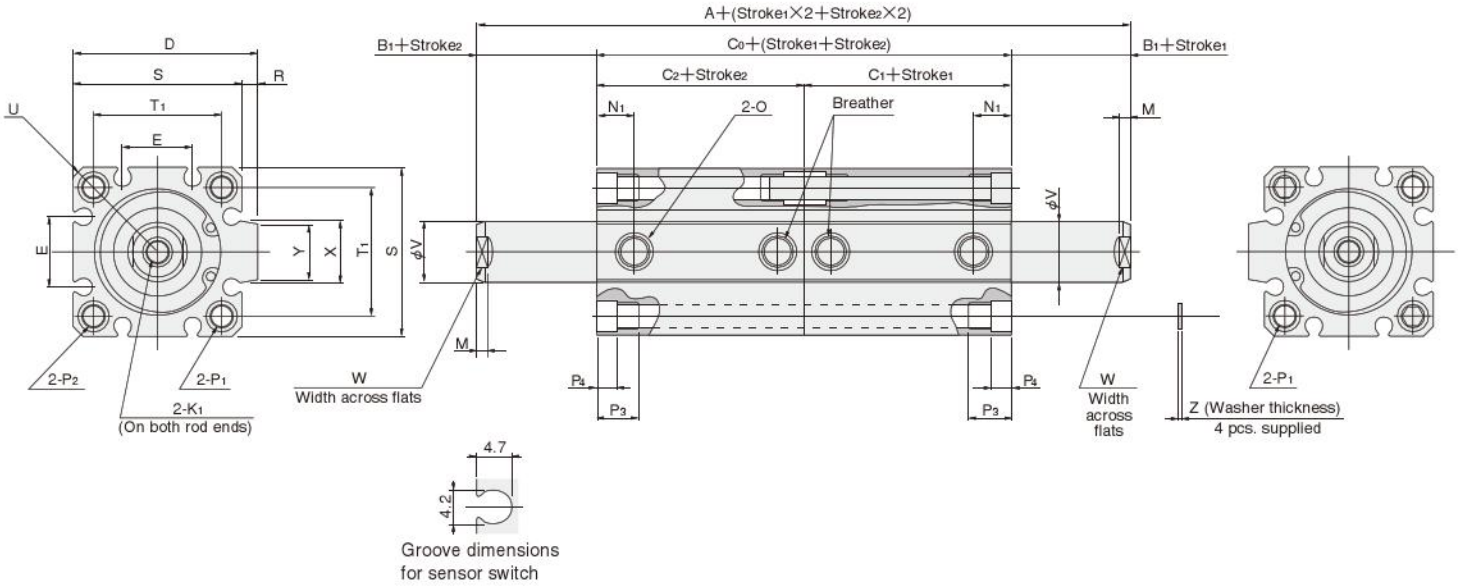

| Bore mm [in.] | Code | Standard cylinder (CTAW) | | | | | | | | | | Cylinder with magnet (CTAWS) | | | | | | | | | |
|---|---|---|---|---|---|---|---|---|---|---|---|---|---|---|---|---|---|---|---|---|---|
| | Stroke 1 | 5～15 (φ50: 10～20) | | | | | 16～30 (φ50: 21～40) | | | | | 5～15 (φ50: 10～20) | | | | | 16～30 (φ50: 21～40) | | | | |
| | | A | $B_1$ | $C_0$ | $C_1$ | $C_2$ | A | $B_1$ | $C_0$ | $C_1$ | $C_2$ | A | $B_1$ | $C_0$ | $C_1$ | $C_2$ | A | $B_1$ | $C_0$ | $C_1$ | $C_2$ |
| 12 [0.472] | D1 | 54 | 5 | 44 | 22 | 22 | 64 | 5 | 54 | 32 | 22 | 64 | 5 | 54 | 27 | 27 | 74 | 5 | 64 | 37 | 27 |
| | D2 | 64 | | 54 | | 32 | 74 | | 64 | | 32 | 74 | | 64 | | 37 | 84 | | 74 | | 37 |
| 16 [0.630] | D1 | 55 | 5.5 | 44 | 22 | 22 | 65 | 5.5 | 54 | 32 | 22 | 65 | 5.5 | 54 | 27 | 27 | 75 | 5.5 | 64 | 37 | 27 |
| | D2 | 65 | | 54 | | 32 | 75 | | 64 | | 32 | 75 | | 64 | | 37 | 85 | | 74 | | 37 |
| 20 [0.787] | D1 | 60 | 5.5 | 49 | 24.5 | 24.5 | 70 | 5.5 | 59 | 34.5 | 24.5 | 80 | 5.5 | 69 | 34.5 | 34.5 | 90 | 5.5 | 79 | 44.5 | 34.5 |
| | D2 | 70 | | 59 | | 34.5 | 80 | | 69 | | 34.5 | 90 | | 79 | | 44.5 | 100 | | 89 | | 44.5 |
| 25 [0.984] | D1 | 64 | 6 | 52 | 26 | 26 | 74 | 6 | 62 | 36 | 26 | 84 | 6 | 72 | 36 | 36 | 94 | 6 | 82 | 46 | 36 |
| | D2 | 74 | | 62 | | 36 | 84 | | 72 | | 36 | 94 | | 82 | | 46 | 104 | | 92 | | 46 |
| 32 [1.260] | D1 | 70 | 7 | 56 | 28 | 28 | 85 | 7 | 71 | 43 | 28 | 90 | 7 | 76 | 38 | 38 | 105 | 7 | 91 | 53 | 38 |
| | D2 | 85 | | 71 | | 43 | 100 | | 86 | | 43 | 105 | | 91 | | 53 | 120 | | 106 | | 53 |
| 40 [1.575] | D1 | 76 | 7 | 62 | 31 | 31 | 91 | 7 | 77 | 46 | 31 | 96 | 7 | 82 | 41 | 41 | 111 | 7 | 97 | 56 | 41 |
| | D2 | 91 | | 77 | | 46 | 106 | | 92 | | 46 | 111 | | 97 | | 56 | 126 | | 112 | | 56 |
| 50 [1.969] | D1 | 74 | 9 | 56 | 28 | 28 | 89 | 9 | 71 | 43 | 28 | 94 | 9 | 76 | 38 | 38 | 109 | 9 | 91 | 53 | 38 |
| | D2 | 89 | | 71 | | 43 | 104 | | 86 | | 43 | 109 | | 91 | | 53 | 124 | | 106 | | 53 |

| Bore mm [in.] | Code | D | E | $K_1$ | M | $N_1$ | O | $P_1$ |
|---|---|---|---|---|---|---|---|---|
| 12 [0.472] | D1 | — | — | M3×0.5 Depth6 | 3.5 | 8 | M5×0.8 | φ4.3 (Thru hole) Counterbore φ6.5 (Both sides) and M5×0.8 (Both sides) |
| | D2 | | | | | | | |
| 16 [0.630] | D1 | — | 6.2 | M4×0.7 Depth8 | 3.5 | 8 | M5×0.8 | φ4.3 (Thru hole) Counterbore φ6.5 (Both sides) and M5×0.8 (Both sides) |
| | D2 | | | | | | | |
| 20 [0.787] | D1 | — | 12.2 | M5×0.8 Depth10 | 4.5 | 9.5 | M5×0.8 | φ4.3 (Thru hole) Counterbore φ6.5 (Both sides) and M5×0.8 (Both sides) |
| | D2 | | | | | | | |
| 25 [0.984] | D1 | — | 12.2 | M6×1 Depth10 | 5 | 10.5 | M5×0.8 | φ5.1 (Thru hole) Counterbore φ8 (Both sides) and M6×1 (Both sides) |
| | D2 | | | | | | | |
| 32 [1.260] | D1 | 48.5 | 18.2 | M8×1.25 Depth12 | 6 | 9.5 | Rc1/8 | φ5.1 (Thru hole) Counterbore φ8 (Both sides) and M6×1 (Both sides) |
| | D2 | | | | | | | |
| 40 [1.575] | D1 | 56.5 | 18.2 | M8×1.25 Depth12 | 6 | 10.5 | Rc1/8 | φ6.9 (Thru hole) Counterbore φ9.5 (Both sides) and M8×1.25 (Both sides) |
| | D2 | | | | | | | |
| 50 [1.969] | D1 | 70 | 24.8 | M10×1.5 Depth15 | 7 | 11 | Rc1/4 | φ6.9 (Thru hole) Counterbore φ11 (Both sides) and M8×1.25 (Both sides) |
| | D2 | | | | | | | |

| Bore mm [in.] | Code | $P_2$ | $P_3$ | $P_4$ | R | S | $T_1$ | U | V | W | X | Y | Z | Appropriate through bolt ※ |
|---|---|---|---|---|---|---|---|---|---|---|---|---|---|---|
| 12 [0.472] | D1 | Counterbore φ6.5 and M5×0.8 | 9.5 | 4.5 | — | 25 | 16.3 | R16 | 6 | 5 | — | — | 1 | M3 |
| | D2 | | | | | | | | | | | | | |
| 16 [0.630] | D1 | Counterbore φ6.5 and M5×0.8 | 9.5 | 4.5 | — | 29 | 19.8 | R19 | 8 | 6 | — | — | 1 | M3 |
| | D2 | | | | | | | | | | | | | |
| 20 [0.787] | D1 | Counterbore φ6.5 and M5×0.8 | 9.5 | 4.5 | — | 34 | 24 | R22 | 10 | 8 | — | — | 1 | M3 |
| | D2 | | | | | | | | | | | | | |
| 25 [0.984] | D1 | Counterbore φ8 and M6×1 | 11.5 | 5.5 | — | 40 | 28 | R25 | 12 | 10 | — | — | 1 | M4 |
| | D2 | | | | | | | | | | | | | |
| 32 [1.260] | D1 | Counterbore φ8 and M6×1 | 11.5 | 5.5 | 4.5 | 44 | 34 | R29.5 | 16 | 14 | 15 | 13.6 | 1 | M4 |
| | D2 | | | | | | | | | | | | | |
| 40 [1.575] | D1 | Counterbore φ9.5 and M8×1.25 | 15.5 | 7.5 | 4.5 | 52 | 40 | R35 | 16 | 14 | 15 | 13.6 | 1.6 | M5 |
| | D2 | | | | | | | | | | | | | |
| 50 [1.969] | D1 | Counterbore φ11 and M8×1.25 | 16.5 | 8.5 | 8 | 62 | 48 | R41 | 20 | 17 | 21.6 | 19 | 1.6 | M6 |
| | D2 | | | | | | | | | | | | | |

Note: D1 is when stroke 2 is 5～15 (φ50: 10～20)mm.
D2 is when stroke 2 is 16～30 (φ50: 21～40)mm.
※ Some types of mounting screws are available (to be ordered separately). See p.209.

## Dimensions of Male Rod End Thread Specification (mm)

CAD Available in the file of each cylinder body.

### ● Double acting type, Single acting push type, Single acting pull type

● $\phi$12～$\phi$25

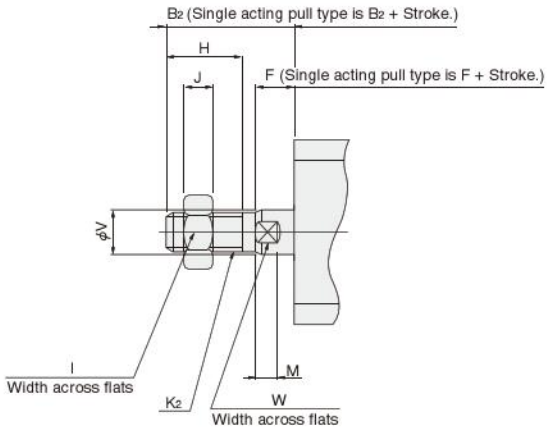


● $\phi$32～$\phi$100
(Single acting type available up to $\phi$ 50)

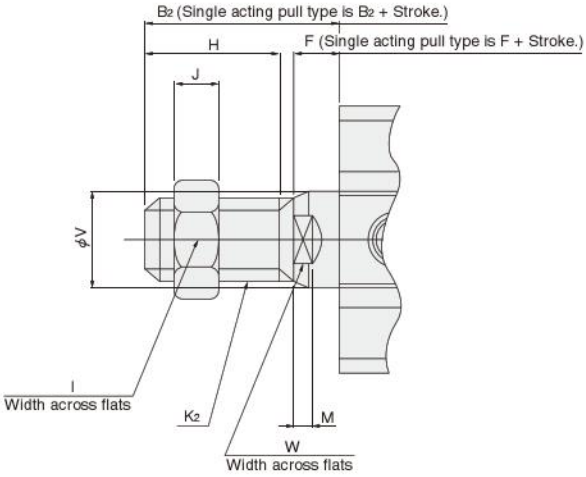


| Bore mm [in.] \ Code | B2 | F | H | I | J | K2 | M | V | W |
|---|---|---|---|---|---|---|---|---|---|
| **12 [0.472]** | 17 | 5 | 10 | 8 | 4 | M5×0.8 | 3.5 | 6 | 5 |
| **16 [0.630]** | 20.5 | 5.5 | 13 | 10 | 5 | M6×1 | 3.5 | 8 | 6 |
| **20 [0.787]** | 22.5 | 5.5 | 15 | 12 | 5 | M8×1 | 4.5 | 10 | 8 |
| **25 [0.984]** | 24 | 6 | 15 | 14 | 6 | M10×1.25 | 5 | 12 | 10 |
| **32 [1.260]** | 35 | 7 | 25 | 19 | 8 | M14×1.5 | 6 | 16 | 14 |
| **40 [1.575]** | 35 | 7 | 25 | 19 | 8 | M14×1.5 | 6 | 16 | 14 |
| **50 [1.969]** | 37 | 9 | 25 | 27 | 11 | M18×1.5 | 7 | 20 | 17 |
| **63 [2.480]** | 37 | 9 | 25 | 27 | 11 | M18×1.5 | 7 | 20 | 17 |
| **80 [3.150]** | 44 | 11 | 30 | 32 | 13 | M22×1.5 | 9 | 25 | 22 |
| **100 [3.940]** | 50 | 12 | 35 | 36 | 14 | M26×1.5 | 9 | 32 | 27 |

Remark: Cylinder joints and cylinder rod ends are available for mounting with the rod end male thread specification. For details, see p.1568.

## Dimensions of Centering Location (mm)

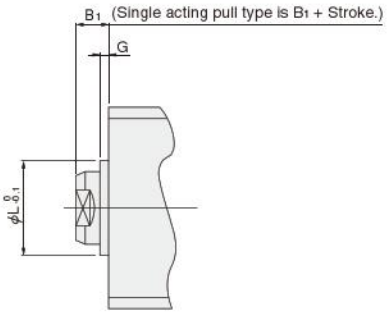


●Not available for bore size $\phi$ 12.

| Bore mm [in.] \ Code | B1 | G | L |
|---|---|---|---|
| **16 [0.630]** | 5.5 | 1.5 | 9.4 |
| **20 [0.787]** | 5.5 | 1.5 | 12 |
| **25 [0.984]** | 6 | 2 | 15 |
| **32 [1.260]** | 7 | 2 | 21 |
| **40 [1.575]** | 7 | 2 | 29 |
| **50 [1.969]** | 9 | 2 | 38 |
| **63 [2.480]** | 9 | 2 | 40 |
| **80 [3.150]** | 11 | 2 | 45 |
| **100 [3.940]** | 12 | 2 | 55 |

# JIG CYLINDERS C SERIES
# LATERAL LOAD RESISTANT CYLINDERS

## Double Acting Type

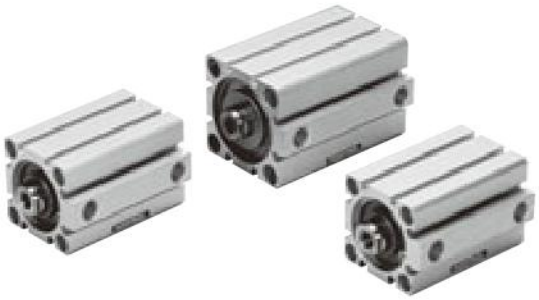



## Symbol

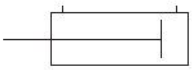

## Specifications

| Item / Bore size mm [in.] | 12 [0.472] | 16 [0.630] | 20 [0.787] | 25 [0.984] | 32 [1.260] | 40 [1.575] | 50 [1.969] | 63 [2.480] | 80 [3.150] | 100 [3.940] |
|---|---|---|---|---|---|---|---|---|---|---|
| Operation type | Double acting type | | | | | | | | | |
| Media | Air | | | | | | | | | |
| Operating pressure range MPa [psi.] | 0.15～1.0 [22～145] | | | | | | 0.1～1.0 [15～145] | | | |
| Proof pressure MPa [psi.] | 1.5 [218] | | | | | | | | | |
| Operating temperature range °C [°F] | 0～60 [32～140] | | | | | | | | | |
| Operating speed range mm/s [in./sec.] | 30～500 [1.2～19.7] | | | | | | 30～300 [1.2～11.8] | | | |
| Cushion | Rubber bumper (Standard equipment) | | | | | | | | | |
| Lubrication | Not required (If lubrication is required, use Turbine Oil Class 1 [**ISO VG32**] or equivalent.) | | | | | | | | | |
| Port size | M5×0.8 | | | | Rc1/8 | | Rc1/4 | | Rc3/8 | |

Remark: For Handling Instructions and Precautions, see p.205.

Refer to p.206 of the graph of "Lateral Load" when the Lateral Load Resistant Cylinder is used.

## Bore Size and Stroke

For non-standard strokes, see p.206.

mm

| Operation type | Bore size | Standard strokes | |
|---|---|---|---|
| | | Standard cylinder | Cylinder with magnet |
| Double acting type | 12 | 5, 10, 15, 20, 25, 30 | 5, 10, 15, 20, 25, 30 |
| | 16 | | |
| | 20 | 5, 10, 15, 20, 25, 30, 35, 40, 45, 50 | 5, 10, 15, 20, 25, 30, 35, 40, 45, 50 |
| | 25 | | |
| | 32 | 5, 10, 15, 20, 25, 30, 35, 40, 45, 50, 75, 100 | 5, 10, 15, 20, 25, 30, 35, 40, 45, 50, 75, 100 |
| | 40 | | |
| | 50 | 10, 15, 20, 25, 30, 35, 40, 45, 50, 75, 100 | 10, 15, 20, 25, 30, 35, 40, 45, 50, 75, 100 |
| | 63 | | |
| | 80 | | |
| | 100 | | |

Remarks: 1. Stroke tolerance $^{+1}_{0}$ [$^{+0.039in.}_{0}$]
2. In most cases, body cutting is used for the non-standard strokes.
However, body cutting is not used for strokes of less than 5mm for $\phi$ 12～$\phi$ 40, and strokes of less than 10mm for $\phi$ 50～$\phi$ 100. The collar packed is used for these cases.

## Order Codes for Lateral Load Resistant Cylinders

**Operation type**

**DA :** Double acting type

**Rod end specification**

Female thread

Male thread

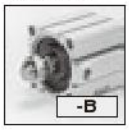


**Mounting type**

Basic type

Foot mounting type

Flange mounting type Note 4

Clevis mounting type (with pin)

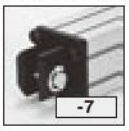


**Sensor switch type** Note2
(For cylinder with magnet)

**Blank:**
No sensor switch

**-ZE135 :** With ZE135
- 2-lead wire Solid state type
- With indicator lamp
- DC10～28V
- Horizontal lead wire

**-ZE155 :** With ZE155
- 3-lead wire Solid state type
- With indicator lamp
- DC4.5～28V
- Horizontal lead wire

**-ZE235 :** With ZE235
- 2-lead wire Solid state type
- With indicator lamp
- DC10～28V
- Vertical lead wire

**-ZE255 :** With ZE255
- 3-lead wire Solid state type
- With indicator lamp
- DC4.5～28V
- Vertical lead wire

**-ZE101 :** With ZE101
- 2-lead wire Reed switch type
- Without indicator lamp
- DC5～28V AC85～115V
- Horizontal lead wire

**-ZE102 :** With ZE102
- 2-lead wire Reed switch type
- With indicator lamp
- DC10～28V AC85～115V
- Horizontal lead wire

**-ZE201 :** With ZE201
- 2-lead wire Reed switch type
- Without indicator lamp
- DC5～28V AC85～115V
- Vertical lead wire

**-ZE202 :** With ZE202
- 2-lead wire Reed switch type
- With indicator lamp
- DC10～28V AC85～115V
- Vertical lead wire

**Lead wire length**

**A :** 1000mm [39in.]
**B :** 3000mm [118in.]

**Number of sensor switches**
(For cylinder with magnet)
**Blank:**
No sensor switch

**1 :** With 1 sensor switch
**2 :** With 2 sensor switches

**Cylinder specification**

**Blank :** Standard cylinder Note1 (Non-ion specification)
**S :** Cylinder with magnet (Non-ion specification)

**Centering location** Note3

**Blank :** No centering location
**-G :** With centering location

| Lateral load resistant cylinder Basic type | | | Bore size × Stroke | | | | | | |
|---|---|---|---|---|---|---|---|---|---|
| CB | DA | S | × | -B Note5 | -G | -1<br>-3<br>-7 | -ZE135<br>-ZE155<br>-ZE235<br>-ZE255<br>-ZE101<br>-ZE102<br>-ZE201<br>-ZE202 | A<br>B | 1<br>2<br>⋮<br>n |

● See table for bore size and stroke.

● Mounting brackets are included at shipping.
● In sizes $\phi$ 12 and $\phi$ 16 with foot mounting brackets and strokes of less than 10mm, the foot mounting bracket and sensor switch may interfere with each other, which could prevent 2 sensor switches from being mounted. For details, consult us.

● For the order codes of sensor switches only, see p.199.

Notes: 1. In the standard cylinder, a magnet for the sensor switch is not built-in.
2. For details of sensor switches, see p.1544.
3. Not available for the bore size $\phi$ 12.
4. Cannot be mounted on the bore size $\phi$ 40 with centering location (**-G**).
5. For information regarding the cylinder joint and cylinder rod end for male thread, see p.1568.

## Additional Parts (To be ordered separately)

Foot mounting bracket (p.197)

Flange mounting bracket (p.198)

Clevis mounting bracket (with pin) (p.198)

Mounting screws (p.209)

## Inner Construction and Major Parts

### ● Double acting type (CBDA)

● $\phi$12～$\phi$40

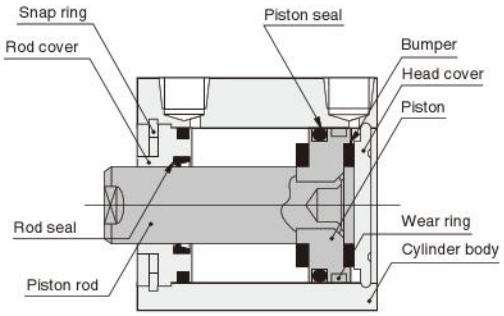


● $\phi$50～$\phi$100

### ● Cylinder with magnet

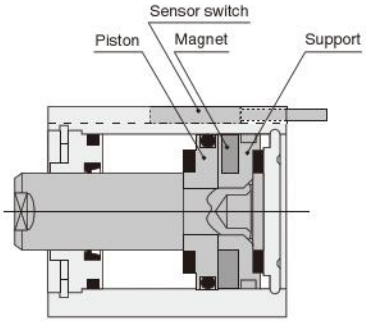


## Major Parts and Materials

| Parts \ Bore mm | $\phi$12 | $\phi$16 | $\phi$20 | $\phi$25 | $\phi$32 | $\phi$40 | $\phi$50 | $\phi$63 | $\phi$80 | $\phi$100 |
|---|---|---|---|---|---|---|---|---|---|---|
| Cylinder body | Aluminum alloy (anodized) | | | | | | | | | |
| Piston | Aluminum alloy (special rust prevention treatment) | | | | | | | | | |
| Piston rod | Stainless steel (chrome plated) | | | | Steel (chrome plated) | | | | | |
| Seal | Synthetic rubber (NBR) | | | | | | | | | |
| Rod cover | Aluminum alloy (special wear-resistant treatment) | | | | | | | | | |
| Head cover | Aluminum alloy (anodized) | | | | | | | | | |
| Snap ring | Steel (phosphate coating) | | | | | | | | | |
| Bumper | Synthetic rubber (NBR; urethane for $\phi$ 12 only) | | | | | | | | | |
| Magnet | Plastic magnet | | | | | | | | | |
| Support | Aluminum alloy (special rust prevention treatment) | | | | | | | | | |
| Wear ring | Plastic | | | | | | | | | |

## Seals

| Parts / Bore mm | Rod seal | Piston seal | Tube gasket | |
|---|---|---|---|---|
| | | | Rod side | Head side |
| $\phi$12 | MYR-6 | COP-12 | Y090260 | None |
| $\phi$16 | MYR-8 | COP-16 | Y090207 | None |
| $\phi$20 | MYR-10 | COP-20 | Y090216 | None |
| $\phi$25 | MYR-12 | COP-25 | Y090210 | None |
| $\phi$32 | MYR-16 | COP-32 | L090084 | None |
| $\phi$40 | MYR-16 | COP-40 | L090151 | None |
| $\phi$50 | MYR-20 | COP-50 | L090174 | L090106 |
| $\phi$63 | MYR-20 | COP-63 | L090180 | L090107 |
| $\phi$80 | PNY-25 | COP-80 | L090171 | L090108 |
| $\phi$100 | PNY-32 | COP-100 | L090172 | L090109 |

## Mass

g [oz.]

| Bore size mm [in.] | Zero stroke mass Note 1 | Additional mass for each 1mm [0.0394in.] stroke | Additional mass of cylinder with magnet | Mass of mounting bracket | | | Additional mass of sensor switch Note2 | |
|---|---|---|---|---|---|---|---|---|
| | | | | Foot bracket | Flange bracket | Clevis bracket | ZE□□□A | ZE□□□B |
| **12 [0.472]** | 26.17 [0.923] | 1.28 [0.0451] | 8 [0.28] | 50 [1.76] | 55 [1.94] | 30 [1.06] | 15 [0.53] | 35 [1.23] |
| **16 [0.630]** | 36.85 [1.300] | 1.62 [0.0571] | 11 [0.39] | 62 [2.19] | 71 [2.50] | 40 [1.41] | | |
| **20 [0.787]** | 57.42 [2.025] | 2.26 [0.0797] | 27 [0.95] | 84 [2.96] | 101 [3.56] | 75 [2.65] | | |
| **25 [0.984]** | 85.94 [3.031] | 3.11 [0.110] | 39 [1.38] | 104 [3.67] | 160 [5.64] | 100 [3.53] | | |
| **32 [1.260]** | 126.86 [4.475] | 4.11 [0.145] | 28 [0.99] | 126 [4.44] | 186 [6.56] | 165 [5.82] | | |
| **40 [1.575]** | 195.3 [6.889] | 4.77 [0.168] | 37 [1.31] | 160 [5.64] | 335 [11.82] | 200 [7.05] | | |
| **50 [1.969]** | 314.69 [11.100] | 7.03 [0.248] | 57 [2.01] | 220 [7.76] | 447 [15.77] | 315 [11.11] | | |
| **63 [2.480]** | 501.06 [17.674] | 8.69 [0.307] | 79 [2.79] | 300 [10.58] | 591 [20.85] | 495 [17.46] | | |
| **80 [3.150]** | 951.44 [33.560] | 13.06 [0.461] | 244 [8.61] | 644 [22.72] | 1414 [49.88] | 1110 [39.15] | | |
| **100 [3.940]** | 1729.88 [61.019] | 18.61 [0.656] | 344 [12.13] | 1172 [41.34] | 2606 [91.92] | 1490 [52.56] | | |

Notes: 1. The above table is for the standard strokes.
2. Sensor switch codes A and B show the lead wire lengths.
A: 1000mm [39in.] B: 3000mm [118in.]

Calculation example: For the mass of a cylinder with magnet, bore size of 25mm, stroke of 30mm, and with 2 sensor switches (**ZE135A**)
85.94＋(3.11×30)＋39＋(15×2)＝248.24g [8.756oz.]

## Dimensions of Lateral Load Resistant Double Acting Type (mm)

### ● $\phi$12～$\phi$25

CBDA Bore size

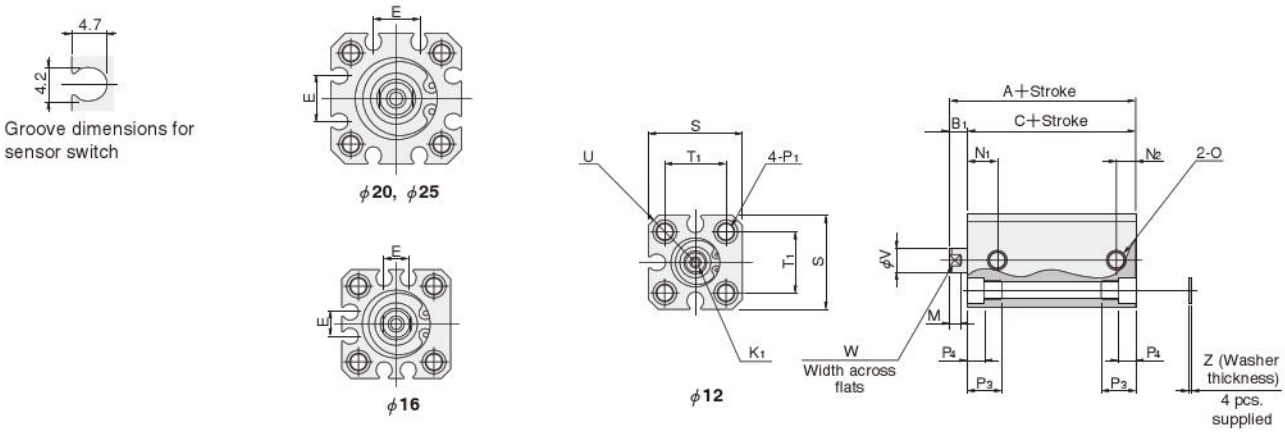


● The drawing is for $\phi$ 12.

### ● $\phi$32～$\phi$100

CBDA Bore size

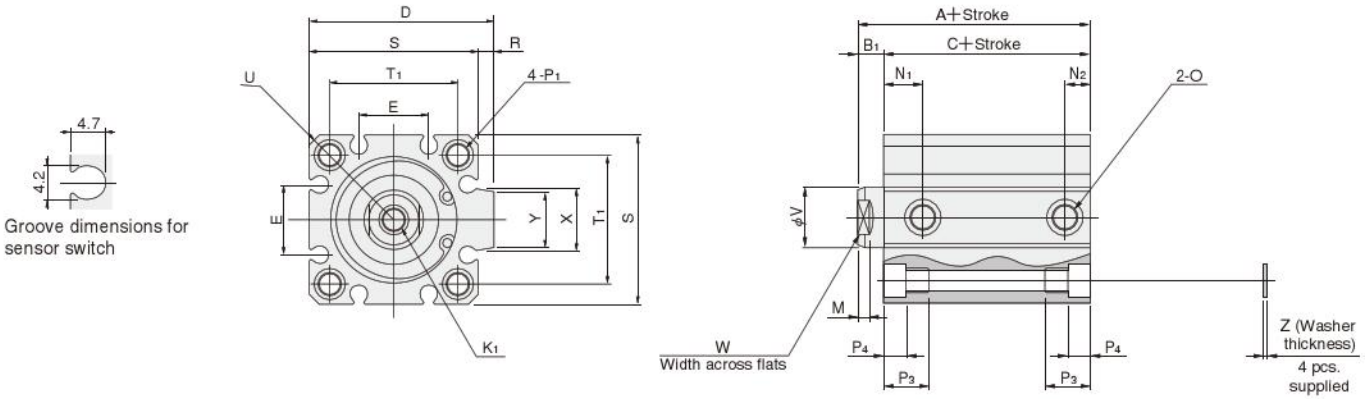


| Type / Bore mm [in.] / Code | Standard cylinder (CBDA) | | | Cylinder with magnet (CBDAS) | | | D | E | K1 | M | N1 | N2 | O |
|---|---|---|---|---|---|---|---|---|---|---|---|---|---|
| | A | B1 | C | A | B1 | C | | | | | | | |
| **12 [0.472]** | 27 | 5 | 22 | 32 | 5 | 27 | — | — | M3×0.5 Depth6 | 3.5 | 8 | 5 | M5×0.8 |
| **16 [0.630]** | 27.5 | 5.5 | 22 | 32.5 | 5.5 | 27 | — | 6.2 | M4×0.7 Depth8 | 3.5 | 8 | 5 | M5×0.8 |
| **20 [0.787]** | 30 | 5.5 | 24.5 | 40 | 5.5 | 34.5 | — | 12.2 | M5×0.8 Depth10 | 4.5 | 9.5 | 5 | M5×0.8 |
| **25 [0.984]** | 32 | 6 | 26 | 42 | 6 | 36 | — | 12.2 | M6×1 Depth10 | 5 | 10.5 | 5 | M5×0.8 |
| **32 [1.260]** | 35 | 7 | 28 | 40 | 7 | 33 | 48.5 | 18.2 | M8×1.25 Depth12 | 6 | 9.5 | 7.5 | Rc1/8 |
| **40 [1.575]** | 38 | 7 | 31 | 43 | 7 | 36 | 56.5 | 18.2 | M8×1.25 Depth12 | 6 | 10.5 | 7.5 | Rc1/8 |
| **50 [1.969]** | 42 | 9 | 33 | 47 | 9 | 38 | 70 | 24.8 | M10×1.5 Depth15 | 7 | 11 | 9.5 | Rc1/4 |
| **63 [2.480]** | 46 | 9 | 37 | 51 | 9 | 42 | 83 | 26.8 | M10×1.5 Depth15 | 7 | 12.5 | 11 | Rc1/4 |
| **80 [3.150]** | 57 | 11 | 46 | 67 | 11 | 56 | 102 | 32.8 | M14×2 Depth20 | 9 | 18 | 12 | Rc3/8 |
| **100 [3.940]** | 68 | 12 | 56 | 78 | 12 | 66 | 122 | 32.8 | M18×2.5 Depth20 | 9 | 22.5 | 16.5 | Rc3/8 |

| Code / Bore mm [in.] | P1 | P3 | P4 | R | S | T1 | U | V | W | X | Y | Z | Appropriate through bolt※ |
|---|---|---|---|---|---|---|---|---|---|---|---|---|---|
| **12 [0.472]** | $\phi$4.3 (Thru hole) C'bore $\phi$6.5 (Both sides) and M5×0.8 (Both sides) | 9.5 | 4.5 | — | 25 | 16.3 | R16 | 6 | 5 | — | — | 1 | M3 |
| **16 [0.630]** | $\phi$4.3 (Thru hole) C'bore $\phi$6.5 (Both sides) and M5×0.8 (Both sides) | 9.5 | 4.5 | — | 29 | 19.8 | R19 | 8 | 6 | — | — | 1 | M3 |
| **20 [0.787]** | $\phi$4.3 (Thru hole) C'bore $\phi$6.5 (Both sides) and M5×0.8 (Both sides) | 9.5 | 4.5 | — | 34 | 24 | R22 | 10 | 8 | — | — | 1 | M3 |
| **25 [0.984]** | $\phi$5.1 (Thru hole) C'bore $\phi$8 (Both sides) and M6×1 (Both sides) | 11.5 | 5.5 | — | 40 | 28 | R25 | 12 | 10 | — | — | 1 | M4 |
| **32 [1.260]** | $\phi$5.1 (Thru hole) C'bore $\phi$8 (Both sides) and M6×1 (Both sides) | 11.5 | 5.5 | 4.5 | 44 | 34 | R29.5 | 16 | 14 | 15 | 13.6 | 1 | M4 |
| **40 [1.575]** | $\phi$6.9 (Thru hole) C'bore $\phi$9.5 (Both sides) and M8×1.25 (Both sides) | 15.5 | 7.5 | 4.5 | 52 | 40 | R35 | 16 | 14 | 15 | 13.6 | 1.6 | M5 |
| **50 [1.969]** | $\phi$6.9 (Thru hole) C'bore $\phi$11 (Both sides) and M8×1.25 (Both sides) | 16.5 | 8.5 | 8 | 62 | 48 | R41 | 20 | 17 | 21.6 | 19 | 1.6 | M6 |
| **63 [2.480]** | $\phi$6.9 (Thru hole) C'bore $\phi$11 (Both sides) and M8×1.25 (Both sides) | 16.5 | 8.5 | 8 | 75 | 60 | R50 | 20 | 17 | 21.6 | 19 | 1.6 | M6 |
| **80 [3.150]** | $\phi$10.5 (Thru hole) C'bore $\phi$14 (Both sides) and M12×1.75 (Both sides) | 22.5 | 10.5 | 8 | 94 | 74 | R62 | 25 | 22 | 27.6 | 25 | 1.6 | M8 |
| **100 [3.940]** | $\phi$12.3 (Thru hole) C'bore $\phi$17.5 (Both sides) and M14×2 (Both sides) | 27 | 13 | 8 | 114 | 90 | R75 | 32 | 27 | 27.6 | 25 | 2 | M10 |

※ Some types of mounting screws are available (to be ordered separately). See p.209.

## Dimensions of Male Rod End Thread Specification (mm)

CAD Available in the file of each cylinder body.

● $\phi$12～$\phi$25

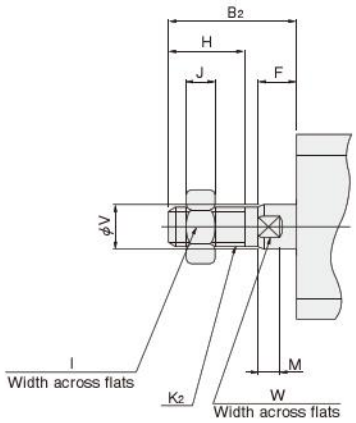


● $\phi$32～$\phi$100

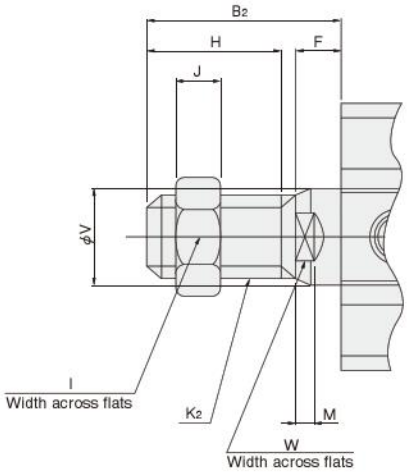


| Bore mm [in.] \ Code | $B_2$ | F | H | I | J | $K_2$ | M | V | W |
|---|---|---|---|---|---|---|---|---|---|
| **12 [0.472]** | 17 | 5 | 10 | 8 | 4 | M5×0.8 | 3.5 | 6 | 5 |
| **16 [0.630]** | 20.5 | 5.5 | 13 | 10 | 5 | M6×1 | 3.5 | 8 | 6 |
| **20 [0.787]** | 22.5 | 5.5 | 15 | 12 | 5 | M8×1 | 4.5 | 10 | 8 |
| **25 [0.984]** | 24 | 6 | 15 | 14 | 6 | M10×1.25 | 5 | 12 | 10 |
| **32 [1.260]** | 35 | 7 | 25 | 19 | 8 | M14×1.5 | 6 | 16 | 14 |
| **40 [1.575]** | 35 | 7 | 25 | 19 | 8 | M14×1.5 | 6 | 16 | 14 |
| **50 [1.969]** | 37 | 9 | 25 | 27 | 11 | M18×1.5 | 7 | 20 | 17 |
| **63 [2.480]** | 37 | 9 | 25 | 27 | 11 | M18×1.5 | 7 | 20 | 17 |
| **80 [3.150]** | 44 | 11 | 30 | 32 | 13 | M22×1.5 | 9 | 25 | 22 |
| **100 [3.940]** | 50 | 12 | 35 | 36 | 14 | M26×1.5 | 9 | 32 | 27 |

Remark: Cylinder joints and cylinder rod ends are available for mounting with the rod end male thread specification. For details, see p.1568.

## Dimensions of Centering Location (mm)

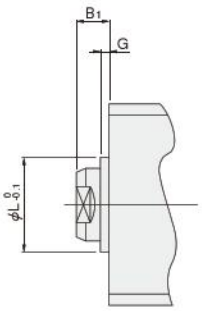


●Not available for bore size $\phi$ 12.

| Bore mm [in.] \ Code | $B_1$ | G | L |
|---|---|---|---|
| **16 [0.630]** | 5.5 | 1.5 | 9.4 |
| **20 [0.787]** | 5.5 | 1.5 | 12 |
| **25 [0.984]** | 6 | 2 | 15 |
| **32 [1.260]** | 7 | 2 | 21 |
| **40 [1.575]** | 7 | 2 | 29 |
| **50 [1.969]** | 9 | 2 | 38 |
| **63 [2.480]** | 9 | 2 | 40 |
| **80 [3.150]** | 11 | 2 | 45 |
| **100 [3.940]** | 12 | 2 | 55 |

# JIG CYLINDERS C SERIES LONG STROKE CYLINDERS

## Double Acting Type

## Symbol

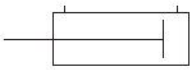

## Specifications

| Item / Bore size mm [in.] | 12 [0.472] | 16 [0.630] | 20 [0.787] | 25 [0.984] | 32 [1.260] | 40 [1.575] | 50 [1.969] | 63 [2.480] | 80 [3.150] | 100 [3.940] |
|---|---|---|---|---|---|---|---|---|---|---|
| Operation type | Double acting type | | | | | | | | | |
| Media | Air | | | | | | | | | |
| Operating pressure range MPa [psi.] | 0.15～1.0 [22～145] | | | | | | 0.1～1.0 [15～145] | | | |
| Proof pressure MPa [psi.] | 1.5 [218] | | | | | | | | | |
| Operating temperature range °C [°F] | 0～60 [32～140] | | | | | | | | | |
| Operating speed range mm/s [in./sec.] | 30～500 [1.2～19.7] | | | | | | 30～300 [1.2～11.8] | | | |
| Cushion | Rubber bumper (Standard equipment) | | | | | | | | | |
| Lubrication | Not required (If lubrication is required, use Turbine Oil Class 1 [**ISO VG32**] or equivalent.) | | | | | | | | | |
| Port size | M5×0.8 | | | | Rc1/8 | | Rc1/4 | | Rc3/8 | |

Remark: For Handling Instructions and Precautions, see p.205.

## Bore Size and Stroke

For non-standard strokes, see p.206.

mm

| Operation type | Bore size | Standard strokes | |
|---|---|---|---|
| | | Standard cylinder | Cylinder with magnet |
| Double acting type | **12** | 35, 50, 75, 100, 125 | 35, 50, 75, 100, 125 |
| | **16** | | |
| | **20** | 75, 100, 125, 150, 175, 200 | 75, 100, 125, 150, 175, 200 |
| | **25** | 75, 100, 125, 150, 175, 200, 225, 250 | 75, 100, 125, 150, 175, 200, 225, 250 |
| | **32** | 125, 150, 175, 200, 225, 250, 275, 300 | 125, 150, 175, 200, 225, 250, 275, 300 |
| | **40** | | |
| | **50** | | |
| | **63** | | |
| | **80** | | |
| | **100** | | |

Remarks: 1. Stroke tolerance $^{+1}_{0}$ [$^{+0.039in.}_{0}$]
2. In most cases, body cutting is used for the non-standard strokes.
Body cutting is also used for strokes of 31～34mm for $\phi$12 and $\phi$16, strokes of 51～74mm for $\phi$20 and $\phi$25, strokes of 101～124mm for $\phi$32 and $\phi$100.

## Order Codes for Long Stroke Cylinders

**Rod end specification**

Female thread

Male thread

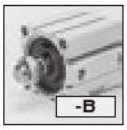


**Mounting type**

Basic type

Foot mounting type

Flange mounting type Note 4

Clevis mounting type (with pin)

**Sensor switch type** Note2
(For cylinder with magnet)

**Blank:**
No sensor switch

**-ZE135 :** With ZE135
- 2-lead wire Solid state type
- With indicator lamp
- DC10～28V
- Horizontal lead wire

**-ZE155 :** With ZE155
- 3-lead wire Solid state type
- With indicator lamp
- DC4.5～28V
- Horizontal lead wire

**-ZE235 :** With ZE235
- 2-lead wire Solid state type
- With indicator lamp
- DC10～28V
- Vertical lead wire

**-ZE255 :** With ZE255
- 3-lead wire Solid state type
- With indicator lamp
- DC4.5～28V
- Vertical lead wire

**-ZE101 :** With ZE101
- 2-lead wire Reed switch type
- Without indicator lamp
- DC5～28V AC85～115V
- Horizontal lead wire

**-ZE102 :** With ZE102
- 2-lead wire Reed switch type
- With indicator lamp
- DC10～28V AC85～115V
- Horizontal lead wire

**-ZE201 :** With ZE201
- 2-lead wire Reed switch type
- Without indicator lamp
- DC5～28V AC85～115V
- Vertical lead wire

**-ZE202 :** With ZE202
- 2-lead wire Reed switch type
- With indicator lamp
- DC10～28V AC85～115V
- Vertical lead wire

**Lead wire length**

**A :** 1000mm [39in.]
**B :** 3000mm [118in.]

**Number of sensor switches**
(For cylinder with magnet)
**Blank:**
No sensor switch

**1 :** With 1 sensor switch
**2 :** With 2 sensor switches

**Operation type**

**DA :** Double acting type

**Cylinder specification**

**Blank :** Standard cylinder Note1 (Non-ion specification)
**S :** Cylinder with magnet (Non-ion specification)

**Centering location** Note3

**Blank :** No centering location
**-G :** With centering location

| Long stroke cylinder Basic type | Operation type | Cylinder specification | Bore size × Stroke | Centering location | | Sensor switch type | Lead wire length | Number of sensor switches |
|---|---|---|---|---|---|---|---|---|
| CC | DA | S | × | -B Note5 | -G | -1<br>-3<br>-7 | -ZE135<br>-ZE155<br>-ZE235<br>-ZE255<br>-ZE101<br>-ZE102<br>-ZE201<br>-ZE202 | A<br>B | 1<br>2<br>⋮<br>n |

- See table for bore size and stroke.
- Mounting brackets are included at shipping.
- For the order codes of sensor switches only, see p.199.

Notes: 1. In the standard cylinder, a magnet for the sensor switch is not built-in.
2. For details of sensor switches, see p.1544.
3. Not available for the bore size $\phi$ 12.
4. Cannot be mounted on the bore size $\phi$ 40 with centering locator (**-G**).
5. For information regarding the cylinder joint and cylinder rod end for male thread, see p.1568.

## Additional Parts (To be ordered separately)

Foot mounting bracket (p.197)

Flange mounting bracket (p.198)

Clevis mounting bracket (with pin) (p.198)

Mounting screws (p.209)

## Inner Construction and Major Parts

### ● Double acting type (CCDA)

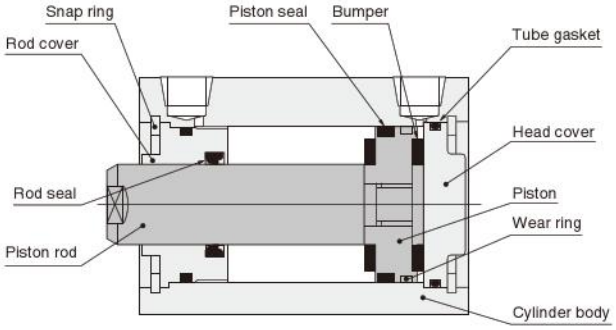


### ● Cylinder with magnet

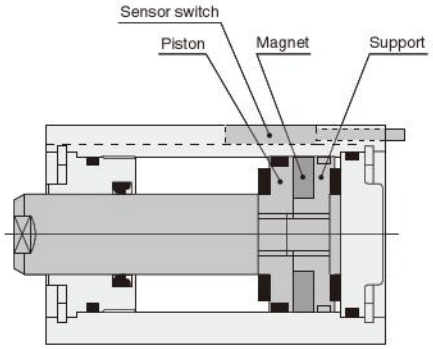


## Major Parts and Materials

| Parts \ Bore mm | ϕ 12 | ϕ 16 | ϕ 20 | ϕ 25 | ϕ 32 | ϕ 40 | ϕ 50 | ϕ 63 | ϕ 80 | ϕ 100 |
|---|---|---|---|---|---|---|---|---|---|---|
| Cylinder body | Aluminum alloy (anodized) | | | | | | | | | |
| Piston | Aluminum alloy (special rust prevention treatment) | | | | | | | | | |
| Piston rod | Stainless steel (chrome plated) | | | | Steel (chrome plated) | | | | | |
| Seal | Synthetic rubber (NBR) | | | | | | | | | |
| Rod cover | Aluminum alloy (special wear-resistant treatment) | | | | | | | | | |
| Head cover | Aluminum alloy (anodized) | | | | | | | | | |
| Snap ring | Steel (phosphate coating) | | | | | | | | | |
| Bumper | Synthetic rubber (NBR; urethane for ϕ 12 only) | | | | | | | | | |
| Magnet | Plastic magnet | | | | | | | | | |
| Support | Aluminum alloy (special rust prevention treatment) | | | | | | | | | |
| Wear ring | Plastic | | | | | | | | | |

## Seals

| Parts / Bore mm | Rod seal | Piston seal | Tube gasket | |
|---|---|---|---|---|
| | | | Rod side | Head side |
| **ϕ 12** | MYR-6 | COP-12 | Y090260 | Y090260 |
| **ϕ 16** | MYR-8 | COP-16 | Y090207 | Y090207 |
| **ϕ 20** | MYR-10 | COP-20 | Y090216 | Y090216 |
| **ϕ 25** | MYR-12 | COP-25 | Y090210 | Y090210 |
| **ϕ 32** | MYR-16 | COP-32 | L090084 | L090084 |
| **ϕ 40** | MYR-16 | COP-40 | L090151 | L090151 |
| **ϕ 50** | MYR-20 | COP-50 | L090174 | L090106 |
| **ϕ 63** | MYR-20 | COP-63 | L090180 | L090107 |
| **ϕ 80** | PNY-25 | COP-80 | L090171 | L090108 |
| **ϕ 100** | PNY-32 | COP-100 | L090172 | L090109 |

## Mass

g [oz.]

| Bore size mm [in.] | Zero stroke mass Note 1 | Additional mass for each 1mm [0.0394in.] stroke | Additional mass of cylinder with magnet | Mass of mounting bracket | | | Additional mass of sensor switch Note2 | |
|---|---|---|---|---|---|---|---|---|
| | | | | Foot bracket | Flange bracket | Clevis bracket | **ZE□□□A** | **ZE□□□B** |
| **12 [0.472]** | 39.15 [1.381] | 1.28 [0.0451] | 7 [0.25] | 50 [1.76] | 55 [1.94] | 30 [1.06] | 15 [0.53] | 35 [1.23] |
| **16 [0.630]** | 54.75 [1.931] | 1.62 [0.0571] | 11 [0.39] | 62 [2.19] | 71 [2.50] | 40 [1.41] | | |
| **20 [0.787]** | 84 [2.963] | 2.26 [0.0797] | 26 [0.92] | 84 [2.96] | 101 [3.56] | 75 [2.65] | | |
| **25 [0.984]** | 121 [4.268] | 3.11 [0.110] | 38 [1.34] | 104 [3.67] | 160 [5.64] | 100 [3.53] | | |
| **32 [1.260]** | 184.15 [6.496] | 4.11 [0.145] | 28 [0.99] | 126 [4.44] | 186 [6.56] | 165 [5.82] | | |
| **40 [1.575]** | 281.75 [9.938] | 4.77 [0.168] | 34 [1.20] | 160 [5.64] | 335 [11.82] | 200 [7.05] | | |
| **50 [1.969]** | 370.23 [13.059] | 7.03 [0.248] | 56 [1.98] | 220 [7.76] | 447 [15.77] | 315 [11.11] | | |
| **63 [2.480]** | 578.65 [20.411] | 8.69 [0.307] | 79 [2.79] | 300 [10.58] | 591 [20.85] | 495 [17.46] | | |
| **80 [3.150]** | 1057.6 [37.305] | 13.06 [0.461] | 250 [8.82] | 644 [22.72] | 1414 [49.88] | 1110 [39.15] | | |
| **100 [3.940]** | 1913.7 [67.503] | 18.61 [0.656] | 350 [12.35] | 1172 [41.34] | 2606 [91.92] | 1490 [52.56] | | |

Notes: 1. The above table is for the standard strokes.
2. Sensor switch codes A and B show the lead wire lengths.
A: 1000mm [39in.] B: 3000mm [118in.]

Calculation example: For the mass of a cylinder with magnet, bore size of 25mm, stroke of 150mm, and with 2 sensor switches (**ZE135A**)
121＋(3.11×150)＋38＋(15×2)＝655.5g [23.122oz.]

## Dimensions of Long Stroke Cylinder Double Acting Type (mm)

### ● $\phi$12～$\phi$25

CCDA Bore size

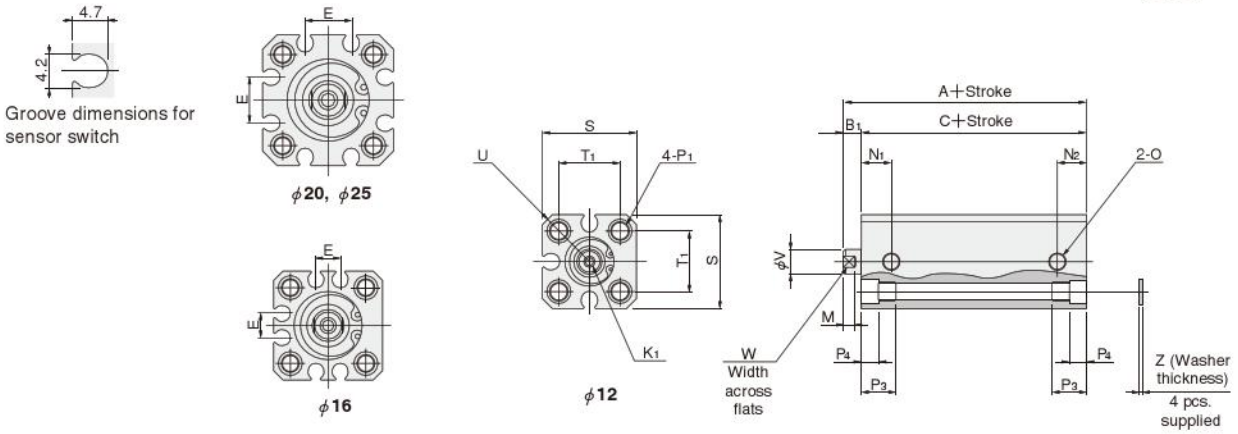


●The drawing is for $\phi$ 12.

### ● $\phi$32～$\phi$100

CCDA Bore size

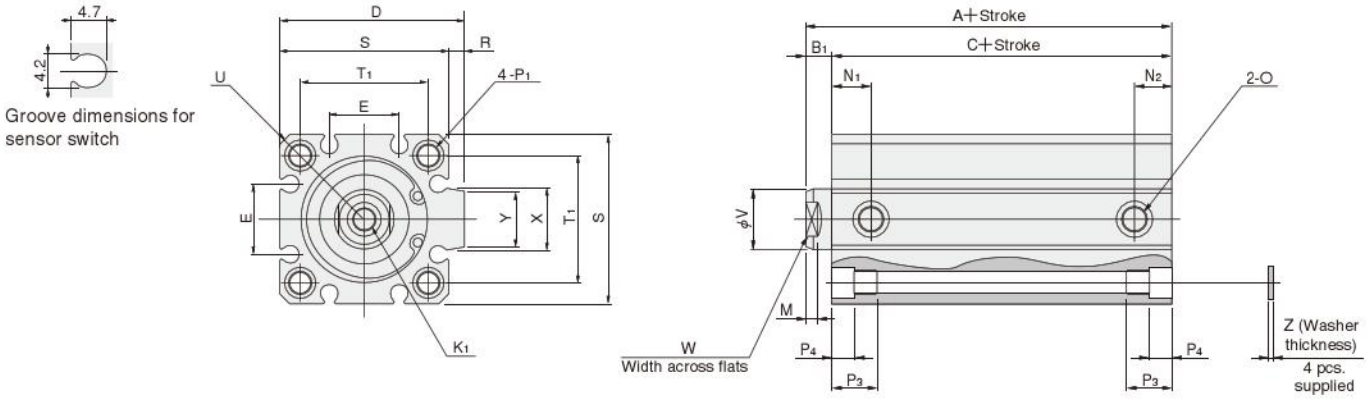


| Type / Bore mm [in.] / Code | Standard cylinder (CCDA) | | | Cylinder with magnet (CCDAS) | | | D | E | K1 | M | N1 | N2 | O |
|---|---|---|---|---|---|---|---|---|---|---|---|---|---|
| | A | B1 | C | A | B1 | C | | | | | | | |
| **12 [0.472]** | 38 | 5 | 33 | 43 | 5 | 38 | — | — | M3×0.5 Depth6 | 3.5 | 8 | 8 | M5×0.8 |
| **16 [0.630]** | 38.5 | 5.5 | 33 | 43.5 | 5.5 | 38 | — | 6.2 | M4×0.7 Depth8 | 3.5 | 8 | 8 | M5×0.8 |
| **20 [0.787]** | 41.5 | 5.5 | 36 | 51.5 | 5.5 | 46 | — | 12.2 | M5×0.8 Depth10 | 4.5 | 9.5 | 9.5 | M5×0.8 |
| **25 [0.984]** | 42.5 | 6 | 36.5 | 52.5 | 6 | 46.5 | — | 12.2 | M6×1 Depth10 | 5 | 10.5 | 10.5 | M5×0.8 |
| **32 [1.260]** | 47 | 7 | 40 | 52 | 7 | 45 | 48.5 | 18.2 | M8×1.25 Depth12 | 6 | 9.5 | 9.5 | Rc1/8 |
| **40 [1.575]** | 50 | 7 | 43 | 55 | 7 | 48 | 56.5 | 18.2 | M8×1.25 Depth12 | 6 | 10.5 | 10.5 | Rc1/8 |
| **50 [1.969]** | 47 | 9 | 38 | 52 | 9 | 43 | 70 | 24.8 | M10×1.5 Depth15 | 7 | 11 | 9.5 | Rc1/4 |
| **63 [2.480]** | 51 | 9 | 42 | 56 | 9 | 47 | 83 | 26.8 | M10×1.5 Depth15 | 7 | 12.5 | 11 | Rc1/4 |
| **80 [3.150]** | 62 | 11 | 51 | 72 | 11 | 61 | 102 | 32.8 | M14×2 Depth20 | 9 | 18 | 12 | Rc3/8 |
| **100 [3.940]** | 73 | 12 | 61 | 83 | 12 | 71 | 122 | 32.8 | M18×2.5 Depth20 | 9 | 22.5 | 16.5 | Rc3/8 |

| Bore mm [in.] / Code | P1 | P3 | P4 | R | S | T1 | U | V | W | X | Y | Z | Appropriate through bolt※ |
|---|---|---|---|---|---|---|---|---|---|---|---|---|---|
| **12 [0.472]** | $\phi$4.3 (Thru hole) Counterbore $\phi$6.5 (Both sides) and M5×0.8 (Both sides) | 9.5 | 4.5 | — | 25 | 16.3 | R16 | 6 | 5 | — | — | 1 | M3 |
| **16 [0.630]** | $\phi$4.3 (Thru hole) Counterbore $\phi$6.5 (Both sides) and M5×0.8 (Both sides) | 9.5 | 4.5 | — | 29 | 19.8 | R19 | 8 | 6 | — | — | 1 | M3 |
| **20 [0.787]** | $\phi$4.3 (Thru hole) Counterbore $\phi$6.5 (Both sides) and M5×0.8 (Both sides) | 9.5 | 4.5 | — | 34 | 24 | R22 | 10 | 8 | — | — | 1 | M3 |
| **25 [0.984]** | $\phi$5.1 (Thru hole) Counterbore $\phi$8 (Both sides) and M6×1 (Both sides) | 11.5 | 5.5 | — | 40 | 28 | R25 | 12 | 10 | — | — | 1 | M4 |
| **32 [1.260]** | $\phi$5.1 (Thru hole) Counterbore $\phi$8 (Both sides) and M6×1 (Both sides) | 11.5 | 5.5 | 4.5 | 44 | 34 | R29.5 | 16 | 14 | 15 | 13.6 | 1 | M4 |
| **40 [1.575]** | $\phi$6.9 (Thru hole) Counterbore $\phi$9.5 (Both sides) and M8×1.25 (Both sides) | 15.5 | 7.5 | 4.5 | 52 | 40 | R35 | 16 | 14 | 15 | 13.6 | 1.6 | M5 |
| **50 [1.969]** | $\phi$6.9 (Thru hole) Counterbore $\phi$11 (Both sides) and M8×1.25 (Both sides) | 16.5 | 8.5 | 8 | 62 | 48 | R41 | 20 | 17 | 21.6 | 19 | 1.6 | M6 |
| **63 [2.480]** | $\phi$6.9 (Thru hole) Counterbore $\phi$11 (Both sides) and M8×1.25 (Both sides) | 16.5 | 8.5 | 8 | 75 | 60 | R50 | 20 | 17 | 21.6 | 19 | 1.6 | M6 |
| **80 [3.150]** | $\phi$10.5 (Thru hole) Counterbore $\phi$14 (Both sides) and M12×1.75 (Both sides) | 22.5 | 10.5 | 8 | 94 | 74 | R62 | 25 | 22 | 27.6 | 25 | 1.6 | M8 |
| **100 [3.940]** | $\phi$12.3 (Thru hole) Counterbore $\phi$17.5 (Both sides) and M14×2 (Both sides) | 27 | 13 | 8 | 114 | 90 | R75 | 32 | 27 | 27.6 | 25 | 2 | M10 |

※ Some types of mounting screws are available (to be ordered separately). See p.209.

## Dimensions of Male Rod End Thread Specification (mm)

CAD Available in the file of each cylinder body.

### ● Double acting type

● $\phi$12～$\phi$25

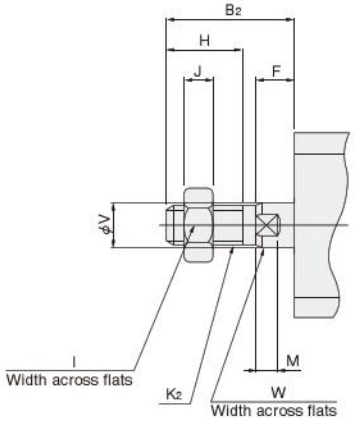


● $\phi$32～$\phi$100

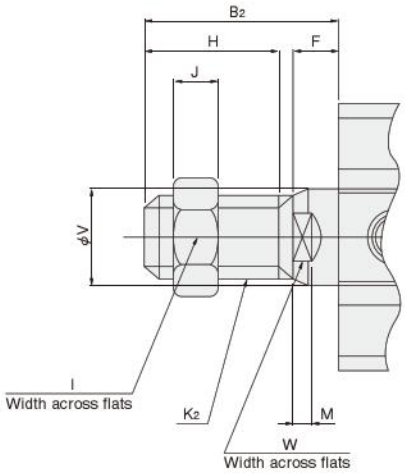


| Bore mm [in.] \ Code | B2 | F | H | I | J | K2 | M | V | W |
|---|---|---|---|---|---|---|---|---|---|
| **12 [0.472]** | 17 | 5 | 10 | 8 | 4 | M5×0.8 | 3.5 | 6 | 5 |
| **16 [0.630]** | 20.5 | 5.5 | 13 | 10 | 5 | M6×1 | 3.5 | 8 | 6 |
| **20 [0.787]** | 22.5 | 5.5 | 15 | 12 | 5 | M8×1 | 4.5 | 10 | 8 |
| **25 [0.984]** | 24 | 6 | 15 | 14 | 6 | M10×1.25 | 5 | 12 | 10 |
| **32 [1.260]** | 35 | 7 | 25 | 19 | 8 | M14×1.5 | 6 | 16 | 14 |
| **40 [1.575]** | 35 | 7 | 25 | 19 | 8 | M14×1.5 | 6 | 16 | 14 |
| **50 [1.969]** | 37 | 9 | 25 | 27 | 11 | M18×1.5 | 7 | 20 | 17 |
| **63 [2.480]** | 37 | 9 | 25 | 27 | 11 | M18×1.5 | 7 | 20 | 17 |
| **80 [3.150]** | 44 | 11 | 30 | 32 | 13 | M22×1.5 | 9 | 25 | 22 |
| **100 [3.940]** | 50 | 12 | 35 | 36 | 14 | M26×1.5 | 9 | 32 | 27 |

Remark: Cylinder joints and cylinder rod ends are available for mounting with the rod end male thread specification. For details, see p.1568.

## Dimensions of Centering Location (mm)

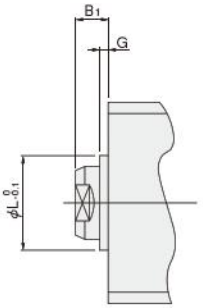


●Not available for bore size $\phi$ 12.

| Bore mm [in.] \ Code | B1 | G | L |
|---|---|---|---|
| **16 [0.630]** | 5.5 | 1.5 | 9.4 |
| **20 [0.787]** | 5.5 | 1.5 | 12 |
| **25 [0.984]** | 6 | 2 | 15 |
| **32 [1.260]** | 7 | 2 | 21 |
| **40 [1.575]** | 7 | 2 | 29 |
| **50 [1.969]** | 9 | 2 | 38 |
| **63 [2.480]** | 9 | 2 | 40 |
| **80 [3.150]** | 11 | 2 | 45 |
| **100 [3.940]** | 12 | 2 | 55 |

# JIG CYLINDERS C SERIES END KEEP CYLINDERS

## Double Acting Type

## Symbols

**●Head side end keep**

**●Rod side end keep**

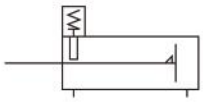

## Specifications

| Item / Bore size mm [in.] | 16 [0.630] | 20 [0.787] | 25 [0.984] | 32 [1.260] | 40 [1.575] | 50 [1.969] | 63 [2.480] |
|---|---|---|---|---|---|---|---|
| Operation type | Double acting type | | | | | | |
| Media | Air | | | | | | |
| Operating pressure range MPa [psi.] | 0.2～0.9 [29～131] | 0.15～0.9 [22～131] | | | | 0.1～0.7 [15～102] | |
| Proof pressure MPa [psi.] | 1.5 [218] | | | | | | |
| Operating temperature range °C [°F] | 0～60 [32～140] | | | | | | |
| Operating speed range mm/s [in./sec.] | 30～500 [1.2～19.7] | | | | | 30～300 [1.2～11.8] | |
| Cushion | Rubber bumper (Standard equipment) | | | | | | |
| Lubrication | Not required (If lubrication is required, use Turbine Oil Class 1 [**ISO VG32**] or equivalent.) | | | | | | |
| Maximum holding force (at end keep) N [lbf.] | 61.7 [13.9] | 96.1 [21.6] | 151 [33.9] | 248.1 [55.8] | 387.3 [87.1] | 471.6 [106] | 534.4 [120] |
| Backlash (at end keep) mm [in.] | 1.4 [0.055] MAX. | | | 1.6 [0.063] MAX. | | | |
| Port size | M5×0.8 | | | Rc1/8 | | Rc1/4 | |

Remark : For Handling Instructions and Precautions, see p.205.

## Bore Size and Stroke

For non-standard strokes, see p.206.

mm

| Operation type | Bore size | Standard strokes<br>Standard cylinder, cylinder with magnet |
|---|---|---|
| Double acting type | **16** | 5, 10, 15, 20, 25, 30, 35, 50, 75, 100, 125 |
| | **20** | 5, 10, 15, 20, 25, 30, 35, 40, 45, 50, 75, 100, 125, 150, 175, 200 |
| | **25** | 5, 10, 15, 20, 25, 30, 35, 40, 45, 50, 75, 100, 125, 150, 175, 200, 225, 250 |
| | **32** | 5, 10, 15, 20, 25, 30, 35, 40, 45, 50, 75, 100, 125, 150, 175, 200, 225, 250, 275, 300 |
| | **40** | |
| | **50** | 10, 15, 20, 25, 30, 35, 40, 45, 50, 75, 100, 125, 150, 175, 200, 225, 250, 275, 300 |
| | **63** | |

Remarks 1: Stroke tolerance $^{+1}_{0}$ [$^{+0.039in.}_{0}$]
2: In most cases, body cutting is used for the non-standard strokes.
However, body cutting is not used for strokes of less than 5mm for $\phi$16～$\phi$40, and strokes of less than 10mm for $\phi$50 and $\phi$63. The collar packed is used for these cases.
Rod side end keep cylinders cannot be collar packed.

## Order Codes for End Keep Cylinders

**Rod end specification**

Female thread

Male thread

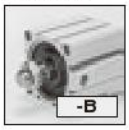


**Mounting type**

Basic type

Foot mounting type

Flange mounting type Note 3

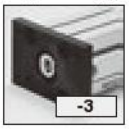


Clevis mounting type (with pin)

**End keep position**

Head side end keep

Rod side end keep

**Sensor switch type** Note2
(For cylinder with magnet)

**Blank:**
No sensor switch

**-ZE135 :** With ZE135
- 2-lead wire Solid state type
- With indicator lamp
- DC10～28V
- Horizontal lead wire

**-ZE155 :** With ZE155
- 3-lead wire Solid state type
- With indicator lamp
- DC4.5～28V
- Horizontal lead wire

**-ZE235 :** With ZE235
- 2-lead wire Solid state type
- With indicator lamp
- DC10～28V
- Vertical lead wire

**-ZE255 :** With ZE255
- 3-lead wire Solid state type
- With indicator lamp
- DC4.5～28V
- Vertical lead wire

**-ZE101 :** With ZE101
- 2-lead wire Reed switch type
- Without indicator lamp
- DC5～28V AC85～115V
- Horizontal lead wire

**-ZE102 :** With ZE102
- 2-lead wire Reed switch type
- With indicator lamp
- DC10～28V AC85～115V
- Horizontal lead wire

**-ZE201 :** With ZE201
- 2-lead wire Reed switch type
- Without indicator lamp
- DC5～28V AC85～115V
- Vertical lead wire

**-ZE202 :** With ZE202
- 2-lead wire Reed switch type
- With indicator lamp
- DC10～28V AC85～115V
- Vertical lead wire

**Lead wire length**

**A :** 1000mm [39in.]
**B :** 3000mm [118in.]

**Number of sensor switches**
(For cylinder with magnet)
**Blank:**
No sensor switch

**1 :** With 1 sensor switch
**2 :** With 2 sensor switches

**Operation type**

**DA :** Double acting type

**End keep cylinder**

**Cylinder specification**

**Blank :** Standard cylinder Note1 (Non-ion specification)
**S :** Cylinder with magnet (Non-ion specification)

**Centering location**

**Blank :** No centering location
**-G :** With centering location

| Long stroke cylinder Basic type | | | | Bore size × Stroke | | | | | | | |
|---|---|---|---|---|---|---|---|---|---|---|---|
| CC | DA | K | S | × | -B Note4 | -G | -HL<br>-RL | -1<br>-3<br>-7 | -ZE135<br>-ZE155<br>-ZE235<br>-ZE255<br>-ZE101<br>-ZE102<br>-ZE201<br>-ZE202 | A<br>B | 1<br>2<br>⋮<br>n |

● See table for bore size and stroke.

● Mounting brackets are included at shipping.

● For the order codes of sensor switches only, see p.199.

Notes: 1. In the standard cylinder, a magnet for the sensor switch is not built-in.
2. For details of sensor switches, see p.1544.
3. Cannot be mounted on the bore size $\phi$ 40 with centering location (**-G**).
4. For information regarding the cylinder joint and cylinder rod end for male thread, see p.1568.

## Additional Parts (To be ordered separately)

Foot mounting bracket (p.197)

Flange mounting bracket (p.198)

Clevis mounting bracket (with pin) (p.198)

Mounting screws (p.209)

## Inner Construction and Major Parts

### ●Head side end keep (CCDAK-HL)

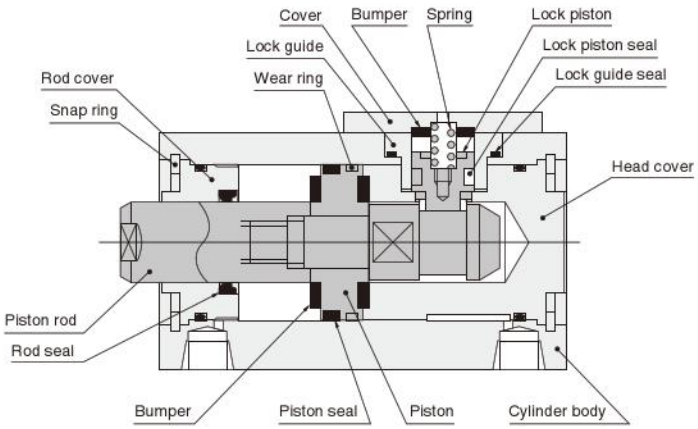


### ●Cylinder with magnet

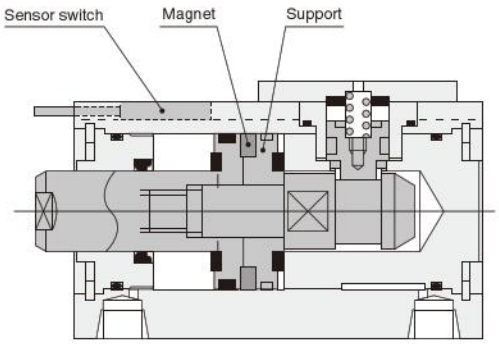


### ●Rod side end keep (CCDAK-RL)

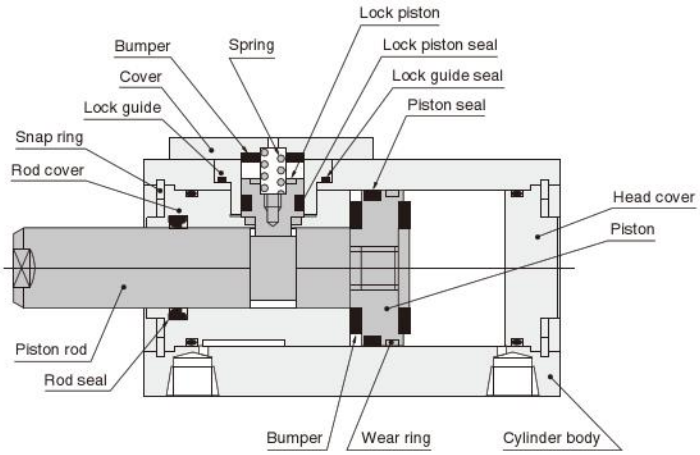


### ●Cylinder with magnet

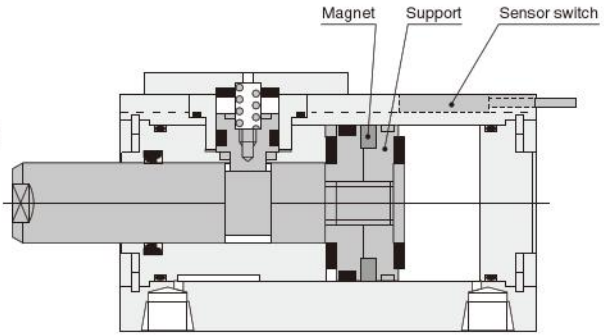


The locking mechanism uses a sequential operation.

## Major Parts and Materials

| Parts \ Bore mm | ϕ 16 | ϕ 20 | ϕ 25 | ϕ 32 | ϕ 40 | ϕ 50 | ϕ 63 |
|---|---|---|---|---|---|---|---|
| Cylinder body | Aluminum alloy (anodized) | | | | | | |
| Piston | Aluminum alloy (special rust prevention treatment) | | | | | | |
| Piston rod | Stainless steel (chrome plated) | | | Steel (chrome plated) | | | |
| Seal | Synthetic rubber (NBR) | | | | | | |
| Rod cover | Aluminum alloy (special wear-resistant treatment) | | | | | | |
| Head cover | Aluminum alloy (special rust prevention treatment) | | | | | | |
| Snap ring | Steel (phosphate coating) | | | | | | |
| Lock piston | Stainless steel | | | | | | |
| Bumper | Synthetic rubber (NBR) | | | | | | |
| Magnet | Plastic magnet | | | | | | |
| Support | Aluminum alloy (special rust prevention treatment) | | | | | | |
| Wear ring | Plastic | | | | | | |
| Lock cover | Aluminum alloy (anodized) | | | | | | |
| Spring | Piano wire | | | | | | |

## Seals

| Parts / Bore mm | Rod seal | Piston seal | Tube gasket | | Lock piston seal | Lock guide seal |
|---|---|---|---|---|---|---|
| | | | Rod side | Head side | | |
| ϕ 16 | MYR-8 | COP-16 | Y090207 | Y090207 | MYN-4 | Y090157 |
| ϕ 20 | MYR-10 | COP-20 | Y090216 | Y090216 | MYN-5 | Y090260 |
| ϕ 25 | MYR-12 | COP-25 | Y090210 | Y090210 | MYN-5 | Y090260 |
| ϕ 32 | MYR-16 | COP-32 | L090084 | L090084 | MYN-10A | L090009 |
| ϕ 40 | MYR-16 | COP-40 | L090151 | L090151 | MYN-10A | L090009 |
| ϕ 50 | MYR-20 | COP-50 | L090174 | L090106 | MYN-16 | L090084 |
| ϕ 63 | MYR-20 | COP-63 | L090180 | L090107 | MYN-16 | L090084 |

## Mass

### ●Head side end keep cylinder

g [oz.]

| Bore size mm [in.] | Zero stroke mass Note 1 | Additional mass for each 1mm [0.0394in.] stroke | Additional mass of cylinder with magnet | Mass of mounting bracket | | | Additional mass of sensor switch Note2 | |
|---|---|---|---|---|---|---|---|---|
| | | | | Foot bracket | Flange bracket | Clevis bracket | **ZE□□□A** | **ZE□□□B** |
| **16 [0.630]** | 109.33 [3.856] | 1.62 [0.0571] | 9.93 [0.350] | 62 [2.19] | 71 [2.50] | 40 [1.41] | 15 [0.53] | 35 [1.23] |
| **20 [0.787]** | 142.49 [5.026] | 2.26 [0.0797] | 25.71 [0.907] | 84 [2.96] | 101 [3.56] | 75 [2.65] | | |
| **25 [0.984]** | 205.98 [7.266] | 3.11 [0.110] | 37.47 [1.322] | 104 [3.67] | 160 [5.64] | 100 [3.53] | | |
| **32 [1.260]** | 330.47 [11.657] | 4.11 [0.145] | 52.43 [1.849] | 126 [4.44] | 186 [6.56] | 165 [5.82] | | |
| **40 [1.575]** | 475.35 [16.767] | 4.77 [0.168] | 69.15 [2.439] | 160 [5.64] | 335 [11.82] | 200 [7.05] | | |
| **50 [1.969]** | 775.35 [27.349] | 7.03 [0.248] | 108 [3.81] | 220 [7.76] | 447 [15.77] | 315 [11.11] | | |
| **63 [2.480]** | 1137.3 [40.116] | 8.69 [0.307] | 159 [5.61] | 300 [10.58] | 591 [20.85] | 495 [17.46] | | |

### ●Rod side end keep cylinder

g [oz.]

| Bore size mm [in.] | Zero stroke mass Note 1 | Additional mass for each 1mm [0.0394in.] stroke | Additional mass of cylinder with magnet | Mass of mounting bracket | | | Additional mass of sensor switch Note2 | |
|---|---|---|---|---|---|---|---|---|
| | | | | Foot bracket | Flange bracket | Clevis bracket | **ZE□□□A** | **ZE□□□B** |
| **16 [0.630]** | 101.33 [3.574] | 1.62 [0.0571] | 9.93 [0.350] | 62 [2.19] | 71 [2.50] | 40 [1.41] | 15 [0.53] | 35 [1.23] |
| **20 [0.787]** | 130.49 [4.603] | 2.26 [0.0797] | 25.71 [0.907] | 84 [2.96] | 101 [3.56] | 75 [2.65] | | |
| **25 [0.984]** | 185.93 [6.558] | 3.11 [0.110] | 37.47 [1.322] | 104 [3.67] | 160 [5.64] | 100 [3.53] | | |
| **32 [1.260]** | 310.44 [10.950] | 4.11 [0.145] | 52.46 [1.850] | 126 [4.44] | 186 [6.56] | 165 [5.82] | | |
| **40 [1.575]** | 445.35 [15.709] | 4.77 [0.168] | 69.15 [2.439] | 160 [5.64] | 335 [11.82] | 200 [7.05] | | |
| **50 [1.969]** | 755.35 [26.644] | 7.03 [0.248] | 108 [3.81] | 220 [7.76] | 447 [15.77] | 315 [11.11] | | |
| **63 [2.480]** | 1082.3 [38.176] | 8.69 [0.307] | 159 [5.61] | 300 [10.58] | 591 [20.85] | 495 [17.46] | | |

Notes: 1. The above table is for the standard strokes.
2. Sensor switch codes A and B show the lead wire lengths.
A: 1000mm [39in.] B: 3000mm [118in.]

Calculation example: For the mass of a head side end keep cylinder with magnet, bore size of 25mm, stroke of 30mm, and with 2 sensor switches (**ZE135A**)
205.98＋(3.11×30)＋37.47＋(15×2)＝366.75g [12.937oz.]

## Dimensions of Head Side End Keep Double Acting Type (mm)

### ● ϕ16

CCDAK Bore size H

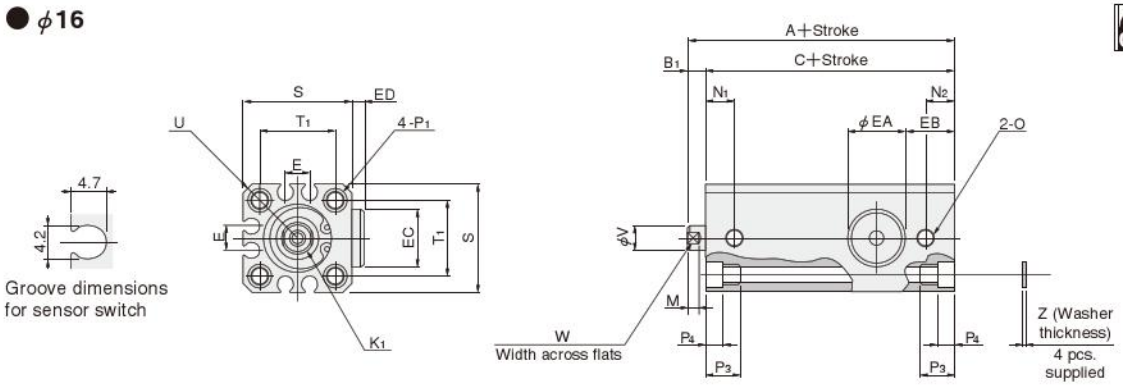


### ● ϕ20, ϕ25

CCDAK Bore size H

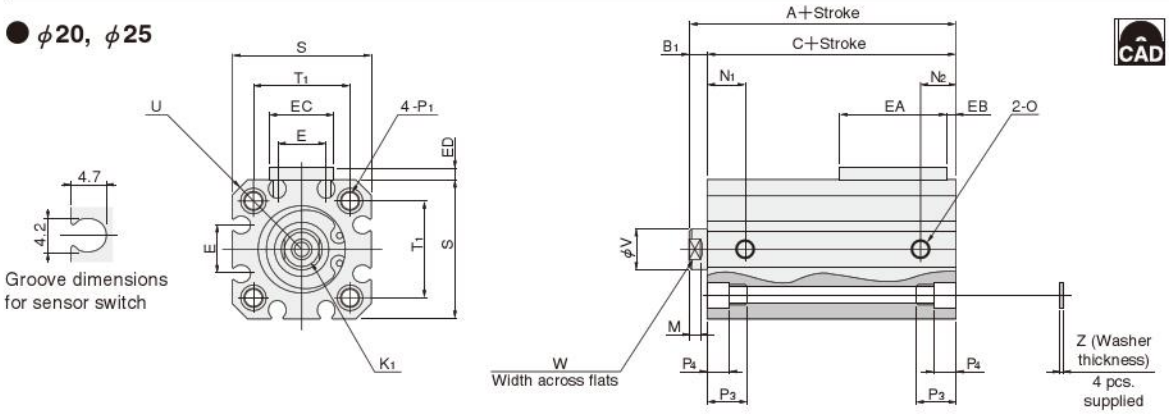


### ● ϕ32～ϕ63

CCDAK Bore size H

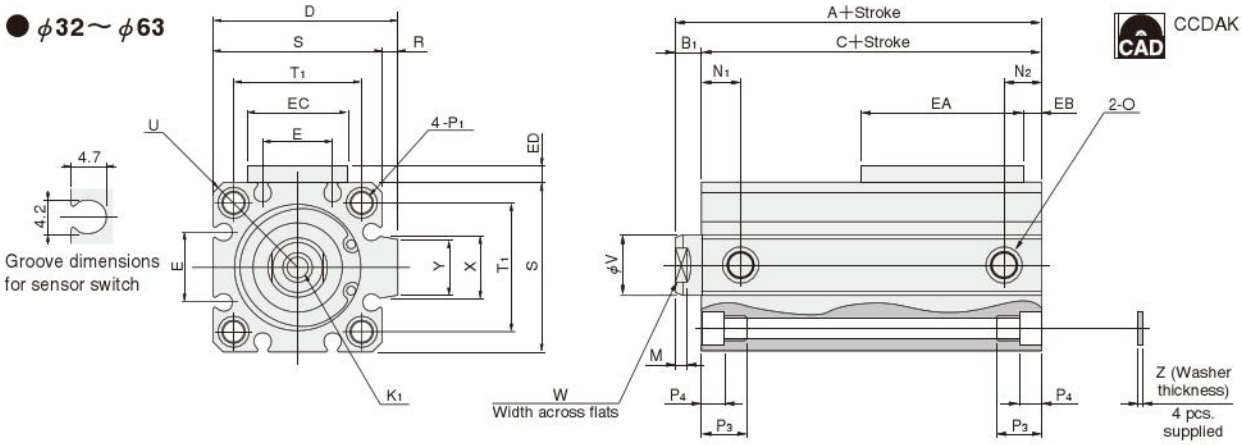


| Type / Bore mm [in.] / Code | Standard cylinder (CCDAK-HL) | | | Cylinder with magnet (CCDAKS-HL) | | | D | E | K1 | M | N1 | N2 | O |
|---|---|---|---|---|---|---|---|---|---|---|---|---|---|
| | A | B1 | C | A | B1 | C | | | | | | | |
| **16 [0.630]** | 63.5 | 5.5 | 58 | 68.5 | 5.5 | 63 | — | 6.2 | M4×0.7 Depth8 | 3.5 | 8 | 8 | M5×0.8 |
| **20 [0.787]** | 61.5 | 5.5 | 56 | 71.5 | 5.5 | 66 | — | 12.2 | M5×0.8 Depth10 | 4.5 | 9.5 | 9.5 | M5×0.8 |
| **25 [0.984]** | 62.5 | 6 | 56.5 | 72.5 | 6 | 66.5 | — | 12.2 | M6×1 Depth10 | 5 | 10.5 | 10.5 | M5×0.8 |
| **32 [1.260]** | 77 | 7 | 70 | 82 | 7 | 75 | 48.5 | 18.2 | M8×1.25 Depth12 | 6 | 9.5 | 9.5 | Rc1/8 |
| **40 [1.575]** | 80 | 7 | 73 | 85 | 7 | 78 | 56.5 | 18.2 | M8×1.25 Depth12 | 6 | 10.5 | 10.5 | Rc1/8 |
| **50 [1.969]** | 87 | 9 | 78 | 92 | 9 | 83 | 70 | 24.8 | M10×1.5 Depth15 | 7 | 11 | 9.5 | Rc1/4 |
| **63 [2.480]** | 91 | 9 | 82 | 96 | 9 | 87 | 83 | 26.8 | M10×1.5 Depth15 | 7 | 12.5 | 11 | Rc1/4 |

| Code / Bore mm [in.] | P1 | P3 | P4 | R | S | T1 | U | V | W | X | Y | Z | EA | EB | EC | ED | Appropriate through bolt※ |
|---|---|---|---|---|---|---|---|---|---|---|---|---|---|---|---|---|---|
| **16 [0.630]** | ϕ4.3 (Thru hole) Counterbore ϕ6.5 (Both sides) and M5×0.8 (Both sides) | 9.5 | 4.5 | — | 29 | 19.8 | R19 | 8 | 6 | — | — | 1 | 16.5 | 13.75 | 16.5 | 3 | M3 |
| **20 [0.787]** | ϕ4.3 (Thru hole) Counterbore ϕ6.5 (Both sides) and M5×0.8 (Both sides) | 9.5 | 4.5 | — | 34 | 24 | R22 | 10 | 8 | — | — | 1 | 30 | 3 | 16 | 3.2 | M3 |
| **25 [0.984]** | ϕ5.1 (Thru hole) Counterbore ϕ8 (Both sides) and M6×1 (Both sides) | 11.5 | 5.5 | — | 40 | 28 | R25 | 12 | 10 | — | — | 1 | 30 | 3 | 16 | 3.2 | M4 |
| **32 [1.260]** | ϕ5.1 (Thru hole) Counterbore ϕ8 (Both sides) and M6×1 (Both sides) | 11.5 | 5.5 | 4.5 | 44 | 34 | R29.5 | 16 | 14 | 15 | 13.6 | 1 | 42 | 5 | 26 | 4 | M4 |
| **40 [1.575]** | ϕ6.9 (Thru hole) Counterbore ϕ9.5 (Both sides) and M8×1.25 (Both sides) | 15.5 | 7.5 | 4.5 | 52 | 40 | R35 | 16 | 14 | 15 | 13.6 | 1.6 | 42 | 6 | 26 | 4 | M5 |
| **50 [1.969]** | ϕ6.9 (Thru hole) Counterbore ϕ11 (Both sides) and M8×1.25 (Both sides) | 16.5 | 8.5 | 8 | 62 | 48 | R41 | 20 | 17 | 21.6 | 19 | 1.6 | 49 | 6 | 35 | 6 | M6 |
| **63 [2.480]** | ϕ6.9 (Thru hole) Counterbore ϕ11 (Both sides) and M8×1.25 (Both sides) | 16.5 | 8.5 | 8 | 75 | 60 | R50 | 20 | 17 | 21.6 | 19 | 1.6 | 49 | 7.5 | 35 | 6 | M6 |

※ Some types of mounting screws are available (to be ordered separately). See p.209.

## Dimensions of Rod Side End Keep Double Acting Type (mm)

### ● $\phi$16

CCDAK Bore size R

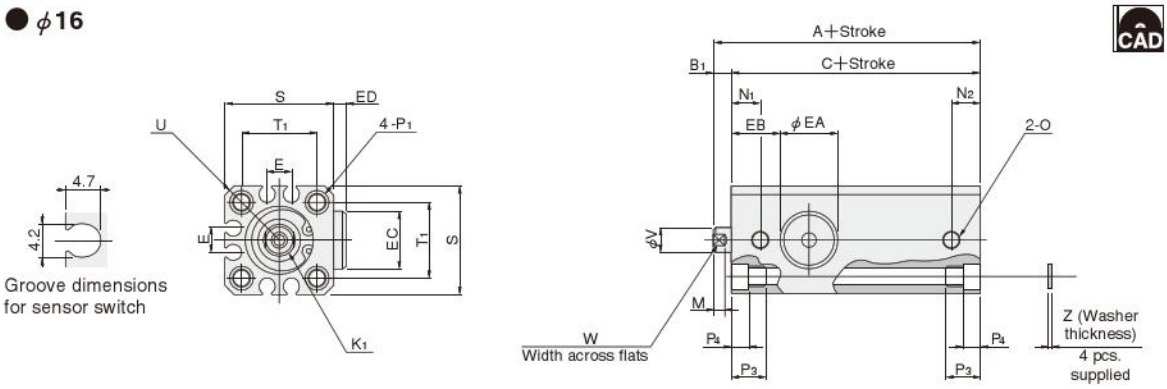


### ● $\phi$20, $\phi$25

CCDAK Bore size R

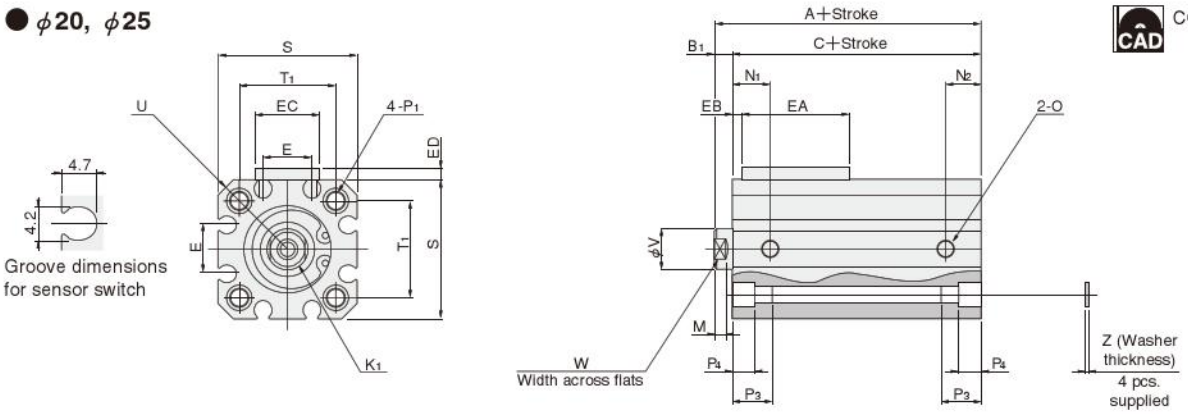


### ● $\phi$32～$\phi$63

CCDAK Bore size R

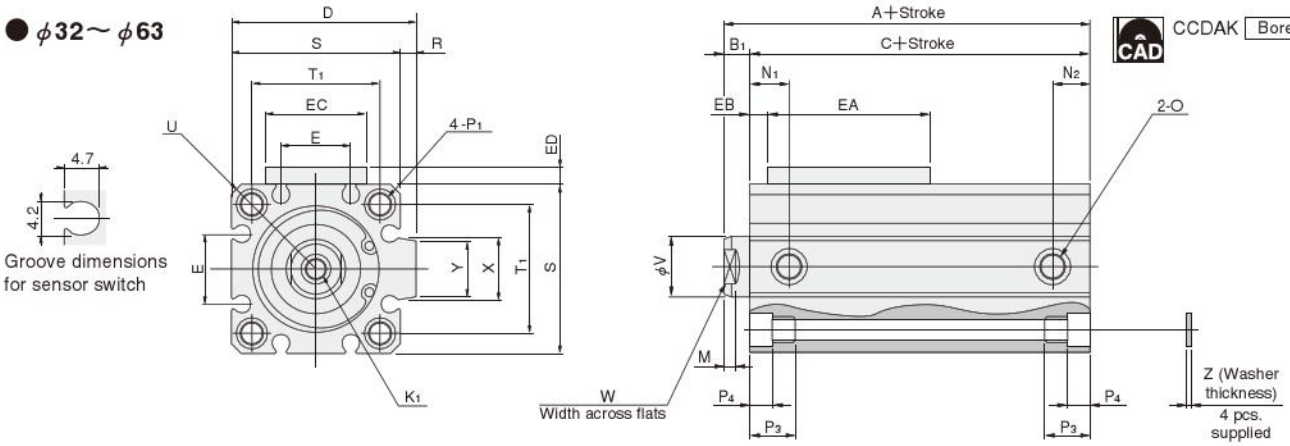


| Type / Bore mm [in.] / Code | Standard cylinder (CCDAK-RL) | | | Cylinder with magnet (CCDAKS-RL) | | | D | E | K1 | M | N1 | N2 | O |
|---|---|---|---|---|---|---|---|---|---|---|---|---|---|
| | A | B1 | C | A | B1 | C | | | | | | | |
| **16 [0.630]** | 58.5 | 5.5 | 53 | 63.5 | 5.5 | 58 | — | 6.2 | M4×0.7 Depth8 | 3.5 | 8 | 8 | M5×0.8 |
| **20 [0.787]** | 56.5 | 5.5 | 51 | 66.5 | 5.5 | 61 | — | 12.2 | M5×0.8 Depth10 | 4.5 | 9.5 | 9.5 | M5×0.8 |
| **25 [0.984]** | 57.5 | 6 | 51.5 | 67.5 | 6 | 61.5 | — | 12.2 | M6×1 Depth10 | 5 | 10.5 | 10.5 | M5×0.8 |
| **32 [1.260]** | 72 | 7 | 65 | 77 | 7 | 70 | 48.5 | 18.2 | M8×1.25 Depth12 | 6 | 9.5 | 9.5 | Rc1/8 |
| **40 [1.575]** | 75 | 7 | 68 | 80 | 7 | 73 | 56.5 | 18.2 | M8×1.25 Depth12 | 6 | 10.5 | 10.5 | Rc1/8 |
| **50 [1.969]** | 82 | 9 | 73 | 87 | 9 | 78 | 70 | 24.8 | M10×1.5 Depth15 | 7 | 11 | 9.5 | Rc1/4 |
| **63 [2.480]** | 86 | 9 | 77 | 91 | 9 | 82 | 83 | 26.8 | M10×1.5 Depth15 | 7 | 12.5 | 11 | Rc1/4 |

| Code / Bore mm [in.] | P1 | P3 | P4 | R | S | T1 | U | V | W | X | Y | Z | EA | EB | EC | ED | Appropriate through bolt※ |
|---|---|---|---|---|---|---|---|---|---|---|---|---|---|---|---|---|---|
| **16 [0.630]** | φ4.3 (Thru hole) Counterbore φ6.5 (Both sides) and M5×0.8 (Both sides) | 9.5 | 4.5 | — | 29 | 19.8 | R19 | 8 | 6 | — | — | 1 | 16.5 | 13.75 | 16.5 | 3 | M3 |
| **20 [0.787]** | φ4.3 (Thru hole) Counterbore φ6.5 (Both sides) and M5×0.8 (Both sides) | 9.5 | 4.5 | — | 34 | 24 | R22 | 10 | 8 | — | — | 1 | 30 | 3 | 16 | 3.2 | M3 |
| **25 [0.984]** | φ5.1 (Thru hole) Counterbore φ8 (Both sides) and M6×1 (Both sides) | 11.5 | 5.5 | — | 40 | 28 | R25 | 12 | 10 | — | — | 1 | 30 | 3 | 16 | 3.2 | M4 |
| **32 [1.260]** | φ5.1 (Thru hole) Counterbore φ8 (Both sides) and M6×1 (Both sides) | 11.5 | 5.5 | 4.5 | 44 | 34 | R29.5 | 16 | 14 | 15 | 13.6 | 1 | 42 | 5 | 26 | 4 | M4 |
| **40 [1.575]** | φ6.9 (Thru hole) Counterbore φ9.5 (Both sides) and M8×1.25 (Both sides) | 15.5 | 7.5 | 4.5 | 52 | 40 | R35 | 16 | 14 | 15 | 13.6 | 1.6 | 42 | 6 | 26 | 4 | M5 |
| **50 [1.969]** | φ6.9 (Thru hole) Counterbore φ11 (Both sides) and M8×1.25 (Both sides) | 16.5 | 8.5 | 8 | 62 | 48 | R41 | 20 | 17 | 21.6 | 19 | 1.6 | 49 | 6 | 35 | 6 | M6 |
| **63 [2.480]** | φ6.9 (Thru hole) Counterbore φ11 (Both sides) and M8×1.25 (Both sides) | 16.5 | 8.5 | 8 | 75 | 60 | R50 | 20 | 17 | 21.6 | 19 | 1.6 | 49 | 7.5 | 35 | 6 | M6 |

※ Some types of mounting screws are available (to be ordered separately). See p.209.

## Dimensions of Male Rod End Thread Specification (mm)

CAD Available in the file of each cylinder body.

### ● Double acting type

● $\phi$16～$\phi$25

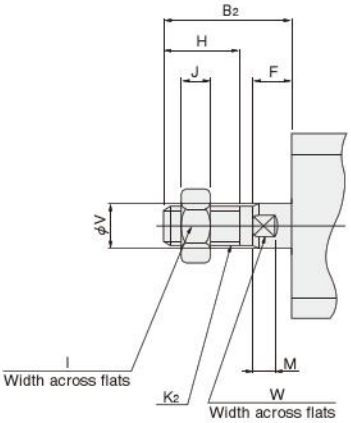


● $\phi$32～$\phi$63

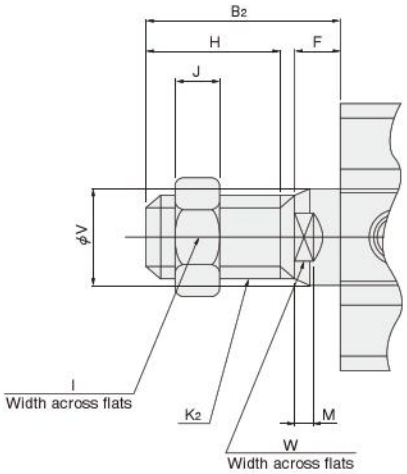


| Bore mm [in.] \ Code | $B_2$ | F | H | I | J | $K_2$ | M | V | W |
|---|---|---|---|---|---|---|---|---|---|
| **16 [0.630]** | 20.5 | 5.5 | 13 | 10 | 5 | M6×1 | 3.5 | 8 | 6 |
| **20 [0.787]** | 22.5 | 5.5 | 15 | 12 | 5 | M8×1 | 4.5 | 10 | 8 |
| **25 [0.984]** | 24 | 6 | 15 | 14 | 6 | M10×1.25 | 5 | 12 | 10 |
| **32 [1.260]** | 35 | 7 | 25 | 19 | 8 | M14×1.5 | 6 | 16 | 14 |
| **40 [1.575]** | 35 | 7 | 25 | 19 | 8 | M14×1.5 | 6 | 16 | 14 |
| **50 [1.969]** | 37 | 9 | 25 | 27 | 11 | M18×1.5 | 7 | 20 | 17 |
| **63 [2.480]** | 37 | 9 | 25 | 27 | 11 | M18×1.5 | 7 | 20 | 17 |

Remark: Cylinder joints and cylinder rod ends are available for mounting with the rod end male thread specification. For details, see p.1568.

## Dimensions of Centering Location (mm)

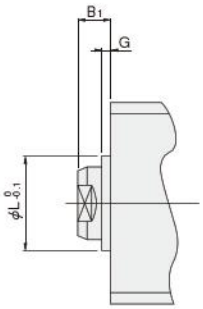


| Bore mm [in.] \ Code | $B_1$ | G | L |
|---|---|---|---|
| **16 [0.630]** | 5.5 | 1.5 | 9.4 |
| **20 [0.787]** | 5.5 | 1.5 | 12 |
| **25 [0.984]** | 6 | 2 | 15 |
| **32 [1.260]** | 7 | 2 | 21 |
| **40 [1.575]** | 7 | 2 | 29 |
| **50 [1.969]** | 9 | 2 | 38 |
| **63 [2.480]** | 9 | 2 | 40 |

# JIG CYLINDERS C SERIES MOUNTING BRACKETS

**Foot Mounting Bracket, Flange Mounting Bracket, Clevis Mounting Bracket**

## Order Codes of Mounting Bracket Only

□ – **CDA** □

**Bore size** $\phi$ **12**～$\phi$ **100** Note5

**Cylinder type**
**CDA** —— For standard, double rod end, tandem, dual stroke, long stroke, lateral load resistant, and end keep cylinder
**CDAL** —— For square rod cylinder Note4

**Mounting bracket**
**1** —— Foot bracket Note1
● One set consists of 2 brackets.
**3** —— Flange bracket Note2
**7** —— Clevis bracket Note3

Notes:
1. Cannot be mounted on tandem or dual stroke cylinders. And cannot be mounted on the 5mm strokes of $\phi$ 16 and $\phi$ 25, and 10mm strokes of $\phi$ 50, $\phi$ 63, and $\phi$ 80 of the standard cylinders.
2. Cannot be mounted on the head side of the tandem cylinder, cylinder 1 side of the dual stroke cylinder, the rod side of the square rod cylinder with centering location, or the bore size $\phi$ 40 with centering location (**-G**).
3. Cannot be used with anything other than the long stroke cylinder, the lateral load resistant cylinder, or the end keep cylinder.
4. Applicable to the foot mounting bracket only.
5. Not available for $\phi$ 6 [0.236in.], $\phi$ 8 [0.315in.], and $\phi$ 10 [0.394in.].

## Dimensions of Foot Mounting Bracket (mm)

CAD $\phi$ 12～$\phi$ 40 : CDA-OP1, $\phi$ 50～$\phi$ 100 : CDA-OP2

### ● $\phi$ 12～$\phi$ 16

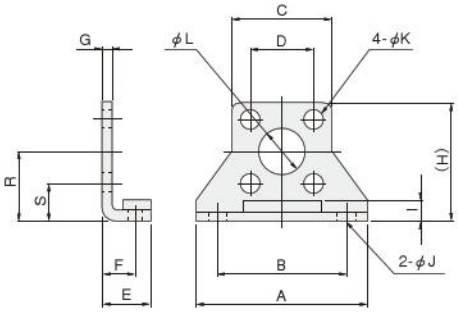


### ● $\phi$ 20～$\phi$ 100

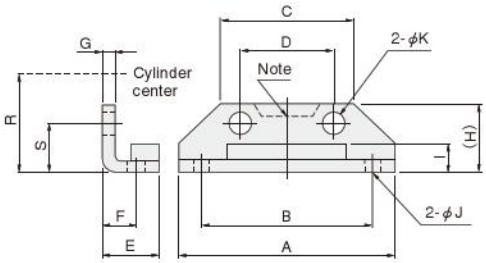


Note: Only for $\phi$ 50

### ● Mounting screw

**For $\phi$ 12～$\phi$ 80**

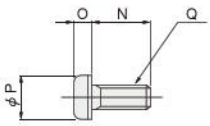


**For $\phi$ 100**

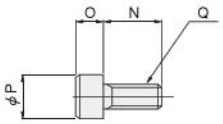


Material: Steel

| Bore mm [in.] \ Code | A | B | C | D | E | F | G | H | I | J | K | L | N | O | P | Q | R | S | Mass g [oz.] |
|---|---|---|---|---|---|---|---|---|---|---|---|---|---|---|---|---|---|---|---|
| **12 [0.472]** | 44 | 34 | 25 | 16.3 | 12.5 | 8 | 2 | 29.5 | 4.5 | 4.5 | 5.5 | 11 | 12 | 2.7 | 9.5 | M5 | 17 | 8.9 | 50 [1.76] |
| **16 [0.630]** | 48 | 38 | 29 | 19.8 | 13 | 8 | 2 | 33.5 | 4.5 | 4.5 | 5.5 | 11 | 12 | 2.7 | 9.5 | M5 | 19 | 9.1 | 62 [2.19] |
| **20 [0.787]** | 54 | 44 | 34 | 24 | 15 | 9.2 | 3.2 | 16.5 | 7 | 4.5 | 5.5 | — | 12 (12, 20) | 2.7 | 9.5 | M5 | 24 | 12 | 84 [2.96] (87 [3.07]) |
| **25 [0.984]** | 64 | 52 | 40 | 28 | 16.5 | 10.7 | 3.2 | 17.5 | 6 | 5.5 | 6.6 | — | 14 (14, 22) | 3.3 | 10.5 | M6 | 26 | 12 | 104 [3.67] (108 [3.81]) |
| **32 [1.260]** | 68 | 56 | 44 | 34 | 17 | 11.2 | 3.2 | 19 | 8 | 5.5 | 6.6 | — | 14 (14, 25) | 3.3 | 10.5 | M6 | 30 | 13 | 126 [4.44] (131 [4.62]) |
| **40 [1.575]** | 78 | 64 | 52 | 40 | 18.2 | 11.2 | 3.2 | 19 | 7 | 6.6 | 9 | — | 20 (20, 30) | 4.4 | 14 | M8 | 33 | 13 | 160 [5.64] (168 [5.93]) |
| **50 [1.969]** | 96 | 78 | 62 | 48 | 22.7 | 14.7 | 3.2 | 22 | 8 | 9 | 9 | — | 20 (20, 35) | 4.4 | 14 | M8 | 39 | 15 | 220 [7.76] (232 [8.18]) |
| **63 [2.480]** | 108 | 90 | 75 | 60 | 25.2 | 16.2 | 3.2 | 24 | 8.5 | 9 | 9 | — | 20 (20, 35) | 4.4 | 14 | M8 | 46 | 16 | 300 [10.58] (312 [11.01]) |
| **80 [3.150]** | 134 | 112 | 94 | 74 | 30.5 | 19.5 | 4.5 | 33 | 12 | 11 | 14 | — | 25 | 6.6 | 21 | M12 | 59 | 22 | 644 [22.72] |
| **100 [3.940]** | 160 | 134 | 114 | 90 | 35.5 | 23 | 6 | 40 | 14 | 14 | 16 | — | 30 | 14 | 21 | M14 | 71 | 26 | 1172 [41.34] |

Remark: Figures in parentheses ( ) are for square rod cylinders.
Two figures in parentheses ( ), Left side: for head side; Right side: for rod side

## Dimensions of Flange Mounting Bracket (mm)

CAD φ12～φ40 : CDA-OP3, φ50～φ100 : CDA-OP4

● φ12～φ16

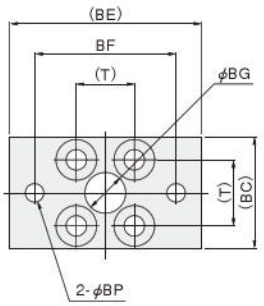


● Mounting screw For φ12～φ80

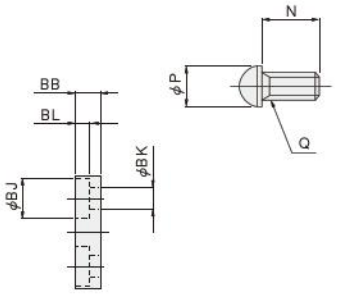


● φ20～φ100

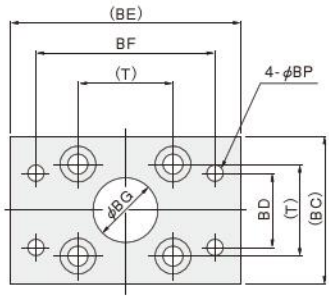


● Mounting screw For φ100

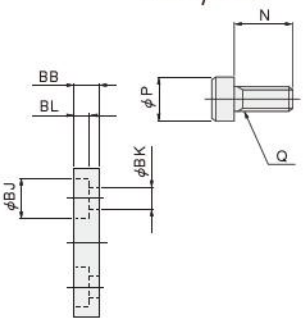


Material: Steel

| Bore mm [in.] \ Code | N | P | Q | T | BB | BC | BD | BE | BF | BG | BJ | BK | BL | BP | Mass g [oz.] |
|---|---|---|---|---|---|---|---|---|---|---|---|---|---|---|---|
| **12 [0.472]** | 12 | 9.5 | M5 | 16.3 | 6 | 28 | — | 50 | 38 | 11 | 10 | 5.5 | 3.6 | 4.5 | 55 [1.94] |
| **16 [0.630]** | 12 | 9.5 | M5 | 19.8 | 6 | 32 | — | 54 | 42 | 11 | 10 | 5.5 | 3.6 | 4.5 | 71 [2.50] |
| **20 [0.787]** | 12(18) | 9.5 | M5 | 24 | 6 | 36 | 24 | 58 | 46 | 15 | 10 | 5.5 | 3.6 | 4.5 | 101 [3.56] (105 [3.70]) |
| **25 [0.984]** | 14(22) | 10.5 | M6 | 28 | 8 | 42 | 28 | 68 | 54 | 17 | 11 | 6.6 | 4.3 | 5.5 | 160 [5.64] (165 [5.82]) |
| **32 [1.260]** | 14(25) | 10.5 | M6 | 34 | 8 | 48 | 34 | 72 | 58 | 22 | 11 | 6.6 | 4.3 | 5.5 | 186 [6.56] (196 [6.91]) |
| **40 [1.575]** | 20(30) | 14 | M8 | 40 | 8 | 58 | 40 | 84 | 68 | 28 | 15 | 9 | 5.3 | 6.6 | 335 [11.82] (351 [12.38]) |
| **50 [1.969]** | 20(35) | 14 | M8 | 48 | 8 | 66 | 40 | 102 | 82 | 38 | 15 | 9 | 5.3 | 9 | 447 [15.77] (471 [16.61]) |
| **63 [2.480]** | 20(35) | 14 | M8 | 60 | 8 | 78 | 50 | 116 | 96 | 40 | 15 | 9 | 5.3 | 9 | 591 [20.85] (615 [21.69]) |
| **80 [3.150]** | 25 | 21 | M12 | 74 | 12 | 100 | 70 | 142 | 118 | 45 | 22 | 14 | 7.3 | 11 | 1414 [49.88] |
| **100 [3.940]** | 30 | 21 | M14 | 90 | 20 | 116 | 80 | 170 | 142 | 55 | 23 | 16 | 15.2 | 14 | 2606 [91.92] |

Remark: Figures in parentheses ( ) are for square rod cylinders.

## Dimensions of Clevis Mounting Bracket (mm)

CAD φ12～φ40 : CDA-OP5, φ50～φ100 : CDA-OP6

● φ12～φ40

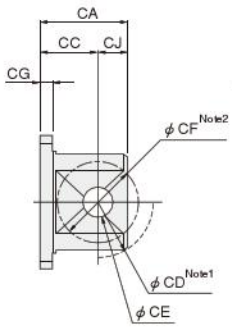


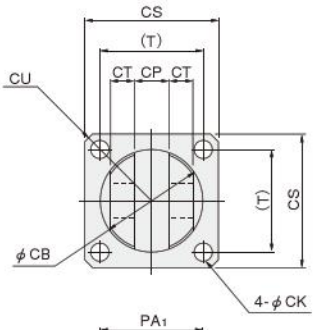


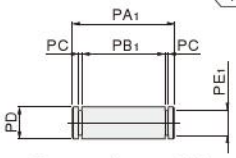


(Two snap rings supplied)

● Mounting screw For φ12～φ100

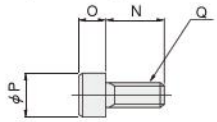


● φ50～φ100

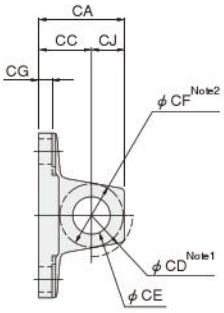


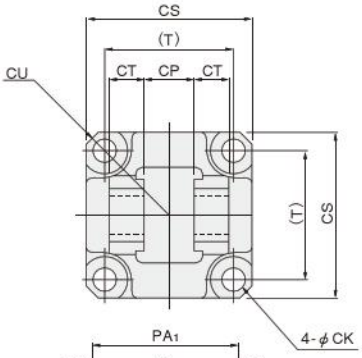


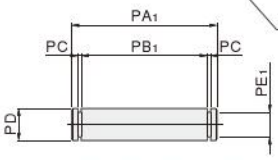


(Two snap rings supplied)

Material: Steel

| Bore mm [in.] \ Code | N | O | P | Q | T | CA | CB | CC | CD | CE | CF | CG | CJ | CK | CP | CS | CT | CU | PA1 | PB1 | PC | PD | PE1 | Mass g [oz.] |
|---|---|---|---|---|---|---|---|---|---|---|---|---|---|---|---|---|---|---|---|---|---|---|---|---|
| **12 [0.472]** | 12 | 5 | 8.5 | M5 | 16.3 | 15 | 12 | 11 | R 7.5 | $4^{+0.03}_{0}$ | R5 | 4 | 4 | 5.5 | $4^{+0.2}_{+0.1}$ | 25 | 3 | R16 | 15 | 10.6 | 0.7 | 4 h8 | 2.5 | 30 [1.06] |
| **16 [0.630]** | 12 | 5 | 8.5 | M5 | 19.8 | 17 | 16 | 12 | R10 | $5^{+0.03}_{0}$ | R6 | 4 | 5 | 5.5 | $5^{+0.2}_{+0.1}$ | 29 | 3.5 | R19 | 17 | 12.6 | 0.7 | 5 h8 | 3 | 40 [1.41] |
| **20 [0.787]** | 12 | 5 | 8.5 | M5 | 24 | 25 | 22 | 17 | R14 | $8^{+0.04}_{0}$ | R11 | 4 | 8 | 5.5 | $8^{+0.4}_{+0.2}$ | 34 | 5.2 | R22 | 24.4 | 19.6 | 0.9 | 8 h8 | 6 | 75 [2.65] |
| **25 [0.984]** | 16 | 6 | 10 | M6 | 28 | 25 | 26 | 17 | R16 | $8^{+0.04}_{0}$ | R11 | 4 | 8 | 6.6 | $8^{+0.4}_{+0.2}$ | 40 | 5.2 | R25 | 24.4 | 19.6 | 0.9 | 8 h8 | 6 | 100 [3.53] |
| **32 [1.260]** | 16 | 6 | 10 | M6 | 34 | 29 | 34 | 19 | R20 | $10^{+0.04}_{0}$ | R12.5 | 4 | 10 | 6.6 | $12^{+0.4}_{+0.2}$ | 44 | 8 | R29.5 | 34 | 29.2 | 0.9 | 10 h8 | 8 | 165 [5.82] |
| **40 [1.575]** | 20 | 8 | 13 | M8 | 40 | 29 | 34 | 19 | R20 | $10^{+0.04}_{0}$ | R12.5 | 4 | 10 | 9 | $12^{+0.4}_{+0.2}$ | 52 | 8 | R35 | 34 | 29.2 | 0.9 | 10 h8 | 8 | 200 [7.05] |
| **50 [1.969]** | 22 | 8 | 13 | M8 | 48 | 32 | — | 19 | R17 | $14^{+0.08}_{0}$ | R14 | 5 | 13 | 9 Counterbore φ17 | $20^{+0.6}_{+0.3}$ | 63 | 12.5 | R41.5 | 55 | 47 | 1.15 | $14^{-0.030}_{-0.070}$ | 13.4 | 315 [11.11] |
| **63 [2.480]** | 20 | 8 | 13 | M8 | 60 | 32 | — | 19 | R17 | $14^{+0.08}_{0}$ | R14 | 6 | 13 | 9 Counterbore φ20 | $20^{+0.6}_{+0.3}$ | 76 | 15 | R50.5 | 60 | 52 | 1.15 | $14^{-0.030}_{-0.070}$ | 13.4 | 495 [17.46] |
| **80 [3.150]** | 30 | 12 | 18 | M12 | 74 | 52 | — | 32 | R24 | $20^{+0.1}_{0}$ | R20 | 7 | 20 | 14 Counterbore φ22 | $32^{+0.6}_{+0.3}$ | 95 | 16 | R62.5 | 74 | 66 | 1.35 | $20^{-0.040}_{-0.084}$ | 19 | 1110 [39.15] |
| **100 [3.940]** | 30 | 14 | 21 | M14 | 90 | 52 | — | 32 | R24 | $20^{+0.1}_{0}$ | R21 | 7 | 20 | 16 Counterbore φ26 | $32^{+0.6}_{+0.3}$ | 115 | 16 | R75.5 | 74 | 66 | 1.35 | $20^{-0.040}_{-0.084}$ | 19 | 1490 [52.56] |

Notes: 1. CD = Swing range of clevis mounting bracket itself.
2. CF = Maximum radius of swing for mating bracket.

Remark: φ12～φ50 are mounted with 2 bolts.

# JIG CYLINDERS C SERIES SENSOR SWITCHES

## Solid State Type, Reed Switch Type

## Order Codes

□ □ — CDAS

A —— 1000mm [39in.]
B —— 3000mm [118in.]

| | | | | |
|---|---|---|---|---|
| **ZE135** | Solid state type | with indicator lamp | DC10V～28V | Horizontal lead wire |
| **ZE235** | Solid state type | with indicator lamp | DC10V～28V | Vertical lead wire |
| **ZE101** | Reed switch type | without indicator lamp | DC5V～28V<br>AC85～115V | Horizontal lead wire |
| **ZE201** | Reed switch type | without indicator lamp | DC5V～28V<br>AC85～115V | Vertical lead wire |
| **ZE155** | Solid state type | with indicator lamp | DC4.5V～28V | Horizontal lead wire |
| **ZE255** | Solid state type | with indicator lamp | DC4.5V～28V | Vertical lead wire |
| **ZE102** | Reed switch type | with indicator lamp | DC10V～28V<br>AC85～115V | Horizontal lead wire |
| **ZE202** | Reed switch type | with indicator lamp | DC10V～28V<br>AC85～115V | Vertical lead wire |

●For details of sensor switches, see p.1544.

## Moving Sensor Switch

- Loosening mounting screw allows the sensor switch to be moved along the switch mounting groove on the cylinder body.
- Tighten the mounting screw with a tightening torque of 0.1～0.2N·m [0.9～1.8in·lbf].

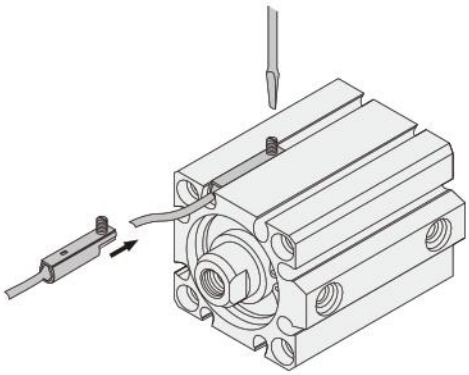

## Minimum Cylinder Strokes When Using Sensor Switches

### ●Solid state type

mm

| Bore size | 2 pcs. mounting Note | | 1 pc. mounting |
|---|---|---|---|
| | 1-surface mounting | 2-surface mounting | |
| **6～12 [0.236～0.472in.]** | 30 | 10 | 5 |
| **16～100 [0.630～3.940in.]** | 10 | | |

Note: Two pieces can be mounted with 5mm stroke.
Take note that overlapping may occur, however.

### ●Reed switch type

mm

| Bore size | 2 pcs. mounting | | 1 pc. mounting |
|---|---|---|---|
| | 1-surface mounting | 2-surface mounting | |
| **12 [0.472in.]** | 30 | 10 | 10 |
| **16～100 [0.630～3.940in.]** | 10 | | |

## Sensor Switch Operating Range, Response Differential, and Maximum Sensing Location

● Operating range : ℓ
The distance the piston travels in one direction, while the switch is in the ON position.

●Response differential : C
The distance between the point where the piston turns the switch ON and the point where the switch is turned OFF as the piston travels in the opposite direction.

### ●Solid state type

mm [in.]

| Item \ Bore | 6 [0.236] | 8 [0.315] | 10 [0.394] | 12 [0.472] | 16 [0.630] | 20 [0.787] | 25 [0.984] | 32 [1.260] | 40 [1.575] | 50 [1.969] | 63 [2.480] | 80 [3.150] | 100 [3.940] |
|---|---|---|---|---|---|---|---|---|---|---|---|---|---|
| Operating range : ℓ | 1.8～3.0 [0.071～0.118] | 1.8～3.0 [0.071～0.118] | 2.0～3.2 [0.079～0.126] | 2～4 [0.079～0.157] | 2～5 [0.079～0.197] | 3.5～7.5 [0.138～0.295] | 4～8 [0.157～0.315] | 3～7 [0.118～0.276] | 3.5～7.5 [0.138～0.295] | 3.5～7.5 [0.138～0.295] | 4～8.5 [0.157～0.335] | 4.5～9.5 [0.177～0.374] | 4.5～9.0 [0.177～0.354] |
| Response differential : C | 0.2 [0.008] or less | | | 0.5 [0.02] or less | | | | | | | | | |
| Maximum sensing location | 6 [0.236] | | | | | | | | | | | | |

Remark: The above table shows reference values.

### ●Reed switch type

mm [in.]

| Item \ Bore | 12 [0.472] | 16 [0.630] | 20 [0.787] | 25 [0.984] | 32 [1.260] | 40 [1.575] | 50 [1.969] | 63 [2.480] | 80 [3.150] | 100 [3.940] |
|---|---|---|---|---|---|---|---|---|---|---|
| Operating range : ℓ | 4.5～8.5 [0.177～0.335] | 5.5～9.5 [0.217～0.374] | 9～13.5 [0.354～0.531] | 10～15.5 [0.394～0.610] | 8～12 [0.315～0.472] | 8.5～14 [0.335～0.551] | 9～15 [0.354～0.591] | 10～16 [0.394～0.630] | 11～16 [0.433～0.630] | 11～16.5 [0.433～0.650] |
| Response differential : C | 1.0 [0.039] or less | 2.0 [0.079] or less | | | | | | | 3.0 [0.118] or less | 2.5 [0.098] or less |
| Maximum sensing location | 10 [0.394] | | | | | | | | | |

Remark: The above table shows reference values.

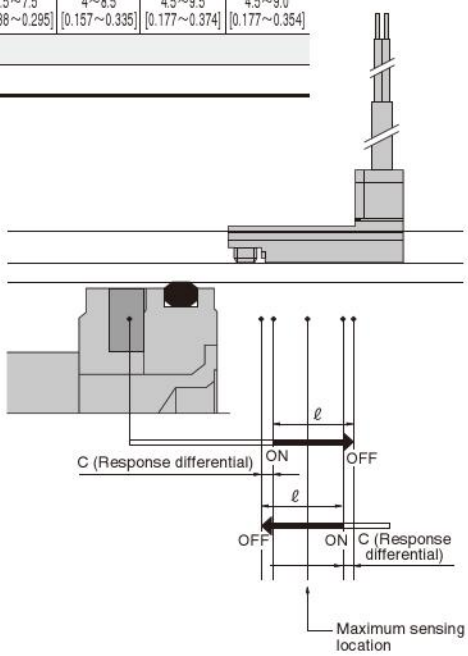

## Mounting Sensor Switch

### ● $\phi$6～$\phi$12

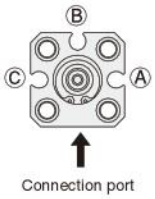


The standard mounting positions at shipping for the end of stroke detection on the rod side is either surface Ⓐ or surface Ⓒ, while the end of stroke detection on the head side is surface Ⓑ.
If mounting sensor switches on the same surface for detection of both ends is required, consult us.
(The sensor switch may sometimes protrude from the cylinder body.)

### ● $\phi$16

Mounting on any of surfaces Ⓐ, Ⓑ, or Ⓒ allows detection of the end of stroke on the rod side and head side.
(The sensor switch may sometimes protrude from the cylinder body.)

### ● $\phi$20～$\phi$100

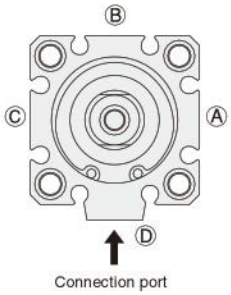


● The drawing is for $\phi$ 32.

Mounting on any of surfaces Ⓐ, Ⓑ, Ⓒ, or Ⓓ allows detection of the end of stroke on the rod side and head side.
(The sensor switch may sometimes protrude from the cylinder body.)
However, the **ZE2**□□ sensor switches cannot be mounted on the Ⓓ position in $\phi$ 32, $\phi$ 40, and $\phi$ 50.

## Mounting Location of End of Stroke Detection Sensor Switch

When the sensor switch is mounted in the position shown in the diagram below (figures in the tables are reference values), the magnet reaches the sensor switch's maximum sensing location at the end of the stroke.

### ● Standard cylinder, Non-rotating cylinder

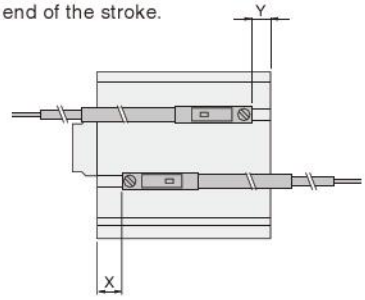


### ■ Solid state type

#### ● Double acting type

mm [in.]

| Code \ Bore | | 6 | 8 | 10 | 12 | 16 | 20 | 25 | 32 | 40 | 50 | 63 | 80 | 100 |
|---|---|---|---|---|---|---|---|---|---|---|---|---|---|---|
| X | Standard type | 7.2 [0.283] | 8 [0.315] | 8.3 [0.327] | 7 [0.276] | 7 [0.276] | 11 [0.433] | 11 [0.433] | 13.5 [0.531] | 14.5 [0.571] | 12.5 [0.492] | 15 [0.591] | 20 [0.787] | 25 [0.984] |
| | With bumper (-R) | — | — | — | 10 [0.394] | 10 [0.394] | 15 [0.591] | 16 [0.630] | 15.5 [0.610] | 16.5 [0.650] | 15.5 [0.610] | 15 [0.591] | 20 [0.787] | 25 [0.984] |
| Y | Standard type | 1 [0.039] | 0.3 [0.012] | 1 [0.039] | 4 [0.157] | 4 [0.157] | 7.5 [0.295] | 9 [0.354] | 8.5 [0.335] | 10.5 [0.413] | 14.5 [0.571] | 16 [0.630] | 20 [0.787] | 25 [0.984] |
| | With bumper (-R) | — | — | — | 6 [0.236] | 6 [0.236] | 8.5 [0.335] | 9 [0.354] | 6.5 [0.256] | 8.5 [0.335] | 11.5 [0.453] | 16 [0.630] | 20 [0.787] | 25 [0.984] |

#### ● Single acting push type

mm [in.]

| Code \ Bore | 6 | 8 | 10 | 12 | 16 | 20 | 25 | 32 | 40 | 50 |
|---|---|---|---|---|---|---|---|---|---|---|
| X | 17.2 [0.677] | 18 [0.709] | 18.3 [0.720] | 15 [0.591] | 15 [0.591] | 14 [0.551] | 14.5 [0.571] | 15.5 [0.610] | 17.5 [0.689] | 17 [0.669] |
| Y | 1 [0.039] | 0.3 [0.012] | 1 [0.039] | 1 [0.039] | 1 [0.039] | 4.5 [0.177] | 5.5 [0.217] | 6.5 [0.256] | 7.5 [0.295] | 10.5 [0.413] |

#### ● Single acting pull type

mm [in.]

| Code \ Bore | 6 | 8 | 10 | 12 | 16 | 20 | 25 | 32 | 40 | 50 |
|---|---|---|---|---|---|---|---|---|---|---|
| X | 7.2 [0.283] | 8 [0.315] | 8.3 [0.327] | 7 [0.276] | 7 [0.276] | 11 [0.433] | 11 [0.433] | 13.5 [0.531] | 14.5 [0.571] | 12.5 [0.492] |
| Y | 11 [0.433] | 10.3 [0.406] | 11 [0.433] | 9 [0.354] | 9 [0.354] | 12.5 [0.492] | 14 [0.551] | 13.5 [0.531] | 15.5 [0.610] | 14.5 [0.571] |

### ■ Reed switch type

#### ● Double acting type

mm [in.]

| Code \ Bore | | 12 | 16 | 20 | 25 | 32 | 40 | 50 | 63 | 80 | 100 |
|---|---|---|---|---|---|---|---|---|---|---|---|
| X | Standard type | 2.5 [0.098] | 2.5 [0.098] | 6.5 [0.256] | 6.5 [0.256] | 9 [0.354] | 10 [0.394] | 8 [0.315] | 10.5 [0.413] | 15.5 [0.610] | 20.5 [0.807] |
| | With bumper (-R) | 5.5 [0.217] | 5.5 [0.217] | 10.5 [0.413] | 11.5 [0.453] | 11 [0.433] | 12 [0.472] | 11 [0.433] | 10.5 [0.413] | 15.5 [0.610] | 20.5 [0.807] |
| Y | Standard type | −0.5 [−0.020] | −0.5 [−0.020] | 3 [0.118] | 4.5 [0.177] | 4 [0.157] | 6 [0.236] | 10 [0.394] | 11.5 [0.453] | 15.5 [0.610] | 20.5 [0.807] |
| | With bumper (-R) | 1.5 [0.059] | 1.5 [0.059] | 4 [0.157] | 4.5 [0.177] | 2 [0.079] | 4 [0.157] | 7 [0.276] | 11.5 [0.453] | 15.5 [0.610] | 20.5 [0.807] |

#### ● Single acting push type

mm [in.]

| Code \ Bore | 12 | 16 | 20 | 25 | 32 | 40 | 50 |
|---|---|---|---|---|---|---|---|
| X | 10.5 [0.413] | 10.5 [0.413] | 9.5 [0.374] | 10 [0.394] | 11 [0.433] | 13 [0.512] | 12.5 [0.492] |
| Y | −3.5 [−0.138] | −3.5 [−0.138] | 0 [0] | 1 [0.039] | 2 [0.079] | 3 [0.118] | 6 [0.236] |

#### ● Single acting pull type

mm [in.]

| Code \ Bore | 12 | 16 | 20 | 25 | 32 | 40 | 50 |
|---|---|---|---|---|---|---|---|
| X | 2.5 [0.098] | 2.5 [0.098] | 6.5 [0.256] | 6.5 [0.256] | 9 [0.354] | 10 [0.394] | 8 [0.315] |
| Y | 4.5 [0.177] | 4.5 [0.177] | 8 [0.315] | 9.5 [0.374] | 9 [0.354] | 11 [0.433] | 10 [0.394] |

## ● Square rod cylinders with magnet

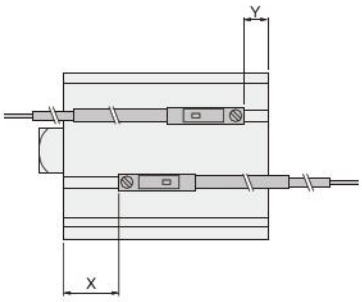


### ■Solid state type

### ● Double acting type

mm [in.]

| Code \ Bore | | 20 | 25 | 32 | 40 | 50 | 63 |
|---|---|---|---|---|---|---|---|
| X | Standard type | 17.5 [0.689] | 17.5 [0.689] | 22.5 [0.886] | 24.5 [0.965] | 27.5 [1.083] | 30 [1.181] |
| | With bumper (-R) | 21.5 [0.846] | 22.5 [0.886] | 24.5 [0.965] | 26.5 [1.043] | 30.5 [1.201] | 30 [1.181] |
| Y | Standard type | 10 [0.394] | 9 [0.354] | 14 [0.551] | 14.5 [0.571] | 14.5 [0.571] | 16 [0.630] |
| | With bumper (-R) | 8.5 [0.335] | 9 [0.354] | 6.5 [0.256] | 8.5 [0.335] | 11.5 [0.453] | 16 [0.630] |

### ■Reed switch type

### ● Double acting type

mm [in.]

| Code \ Bore | | 20 | 25 | 32 | 40 | 50 | 63 |
|---|---|---|---|---|---|---|---|
| X | Standard type | 13 [0.512] | 13 [0.512] | 18 [0.709] | 20 [0.787] | 23 [0.906] | 25.5 [1.004] |
| | With bumper (-R) | 17 [0.669] | 18 [0.709] | 20 [0.787] | 22 [0.866] | 26 [1.024] | 25.5 [1.004] |
| Y | Standard type | 5 [0.197] | 4.5 [0.177] | 4 [0.157] | 6 [0.236] | 10 [0.394] | 11.5 [0.453] |
| | With bumper (-R) | 4 [0.157] | 4.5 [0.177] | 2 [0.079] | 4 [0.157] | 7 [0.276] | 11.5 [0.453] |

## ● Double rod cylinders with magnet

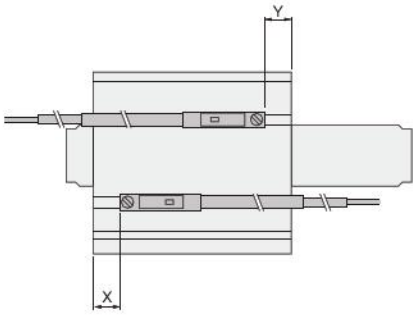


### ■Solid state type

### ● Double acting type

mm [in.]

| Code \ Bore | | 6 | 8 | 10 | 12 | 16 | 20 | 25 | 32 | 40 | 50 | 63 | 80 | 100 |
|---|---|---|---|---|---|---|---|---|---|---|---|---|---|---|
| X | Standard type | 7.2 [0.283] | 8 [0.315] | 8.3 [0.327] | 7 [0.276] | 7 [0.276] | 11 [0.433] | 11 [0.433] | 13.5 [0.531] | 14.5 [0.571] | 12.5 [0.492] | 15.5 [0.610] | 20.5 [0.807] | 25 [0.984] |
| | With bumper (-R) | — | — | — | 10 [0.394] | 10 [0.394] | 15 [0.591] | 16 [0.630] | 15.5 [0.610] | 16.5 [0.650] | 14 [0.551] | 15 [0.591] | 20.5 [0.807] | 25 [0.984] |
| Y | Standard type | 5.5 [0.217] | 5.8 [0.228] | 6 [0.236] | 10 [0.394] | 10 [0.394] | 14 [0.551] | 14.5 [0.571] | 15.5 [0.610] | 17.5 [0.689] | 16.5 [0.650] | 18 [0.709] | 26.5 [1.043] | 31.5 [1.240] |
| | With bumper (-R) | — | — | — | 12 [0.472] | 12 [0.472] | 15 [0.591] | 14.5 [0.571] | 6.5 [0.256] | 15.5 [0.610] | 15 [0.591] | 18 [0.709] | 26.5 [1.043] | 31.5 [1.240] |

### ● Single acting type

mm [in.]

| Code \ Bore | 12 | 16 | 20 | 25 | 32 | 40 | 50 |
|---|---|---|---|---|---|---|---|
| X | 15 [0.591] | 15 [0.591] | 14 [0.551] | 14.5 [0.571] | 15.5 [0.610] | 17.5 [0.689] | 16.5 [0.650] |
| Y | 7 [0.276] | 7 [0.276] | 11 [0.433] | 11 [0.433] | 13.5 [0.531] | 14.5 [0.571] | 12.5 [0.492] |

### ■Reed switch type

### ● Double acting type

mm [in.]

| Code \ Bore | | 12 | 16 | 20 | 25 | 32 | 40 | 50 | 63 | 80 | 100 |
|---|---|---|---|---|---|---|---|---|---|---|---|
| X | Standard type | 2.5 [0.098] | 2.5 [0.098] | 6.5 [0.256] | 6.5 [0.256] | 9 [0.354] | 10 [0.394] | 8 [0.315] | 10.5 [0.413] | 16 [0.630] | 20.5 [0.807] |
| | With bumper (-R) | 5.5 [0.217] | 5.5 [0.217] | 10.5 [0.413] | 11.5 [0.453] | 11 [0.433] | 12 [0.472] | 9.5 [0.374] | 10.5 [0.413] | 16 [0.630] | 20.5 [0.807] |
| Y | Standard type | 5.5 [0.217] | 5.5 [0.217] | 9.5 [0.374] | 10 [0.394] | 11 [0.433] | 13 [0.512] | 12 [0.472] | 13.5 [0.531] | 22 [0.866] | 27 [1.063] |
| | With bumper (-R) | 7.5 [0.295] | 7.5 [0.295] | 10.5 [0.413] | 10 [0.394] | 2 [0.079] | 11 [0.433] | 10.5 [0.413] | 13.5 [0.531] | 22 [0.866] | 27 [1.063] |

### ● Single acting type

mm [in.]

| Code \ Bore | 12 | 16 | 20 | 25 | 32 | 40 | 50 |
|---|---|---|---|---|---|---|---|
| X | 10.5 [0.413] | 10.5 [0.413] | 9.5 [0.374] | 10 [0.394] | 11 [0.433] | 13 [0.512] | 12 [0.472] |
| Y | 2.5 [0.098] | 2.5 [0.098] | 6.5 [0.256] | 6.5 [0.256] | 9 [0.354] | 10 [0.394] | 8 [0.315] |

## ●Tandem cylinders with magnet

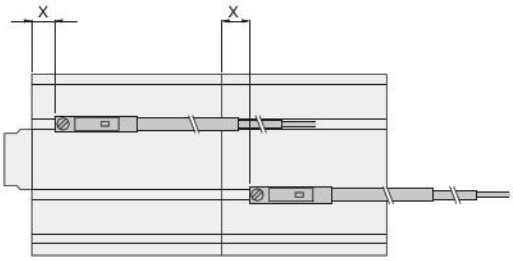


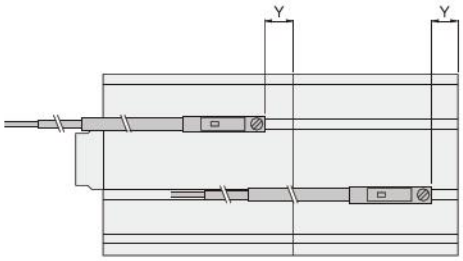


### ■Solid state type

#### ●Double acting type

mm [in.]

| Code | Bore | 12 | 16 | 20 | 25 | 32 | 40 | 50 | 63 | 80 | 100 |
|---|---|---|---|---|---|---|---|---|---|---|---|
| X | Standard type | 7 [0.276] | 7 [0.276] | 11 [0.433] | 11 [0.433] | 13.5 [0.531] | 14.5 [0.571] | 12.5 [0.492] | 15 [0.591] | 20 [0.787] | 25 [0.984] |
| | With bumper (-R) | 10 [0.394] | 10 [0.394] | 15 [0.591] | 16 [0.630] | 15.5 [0.610] | 16.5 [0.650] | 15.5 [0.610] | 15 [0.591] | 20 [0.787] | 25 [0.984] |
| Y | Standard type | 4 [0.157] | 4 [0.157] | 7.5 [0.295] | 9 [0.354] | 8.5 [0.335] | 10.5 [0.413] | 14.5 [0.571] | 16 [0.630] | 20 [0.787] | 25 [0.984] |
| | With bumper (-R) | 6 [0.236] | 6 [0.236] | 8.5 [0.335] | 9 [0.354] | 6.5 [0.256] | 8.5 [0.335] | 11.5 [0.453] | 16 [0.630] | 20 [0.787] | 25 [0.984] |

#### ●Single acting push type

mm [in.]

| Code \ Bore | 12 | 16 | 20 | 25 | 32 | 40 | 50 |
|---|---|---|---|---|---|---|---|
| X | 15 [0.591] | 15 [0.591] | 14 [0.551] | 14.5 [0.571] | 15.5 [0.610] | 17.5 [0.689] | 16.5 [0.650] |
| Y | 1 [0.039] | 1 [0.039] | 4.5 [0.177] | 5.5 [0.217] | 6.5 [0.256] | 7.5 [0.295] | 10.5 [0.413] |

### ■Reed switch type

#### ●Double acting type

mm [in.]

| Code | Bore | 12 | 16 | 20 | 25 | 32 | 40 | 50 | 63 | 80 | 100 |
|---|---|---|---|---|---|---|---|---|---|---|---|
| X | Standard type | 2.5 [0.098] | 2.5 [0.098] | 6.5 [0.256] | 6.5 [0.256] | 9 [0.354] | 10 [0.394] | 8 [0.315] | 10.5 [0.413] | 15.5 [0.610] | 20.5 [0.807] |
| | With bumper (-R) | 5.5 [0.217] | 5.5 [0.217] | 10.5 [0.413] | 11.5 [0.453] | 11 [0.433] | 12 [0.472] | 11 [0.433] | 10.5 [0.413] | 15.5 [0.610] | 20.5 [0.807] |
| Y | Standard type | −0.5 [−0.020] | −0.5 [−0.020] | 3 [0.118] | 4.5 [0.177] | 4 [0.157] | 6 [0.236] | 10 [0.394] | 11.5 [0.453] | 15.5 [0.610] | 20.5 [0.807] |
| | With bumper (-R) | 1.5 [0.059] | 1.5 [0.059] | 4 [0.157] | 4.5 [0.177] | 2 [0.079] | 4 [0.157] | 7 [0.276] | 11.5 [0.453] | 15.5 [0.610] | 20.5 [0.807] |

#### ●Single acting push type

mm [in.]

| Code \ Bore | 12 | 16 | 20 | 25 | 32 | 40 | 50 |
|---|---|---|---|---|---|---|---|
| X | 10.5 [0.413] | 10.5 [0.413] | 9.5 [0.374] | 10 [0.394] | 11 [0.433] | 13 [0.512] | 12 [0.472] |
| Y | −3.5 [−0.138] | −3.5 [−0.138] | 0 [0] | 1 [0.039] | 2 [0.079] | 3 [0.118] | 6 [0.236] |

## ● Dual stroke cylinders with magnet

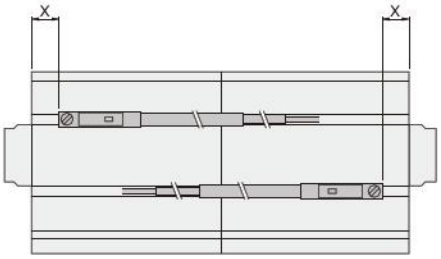


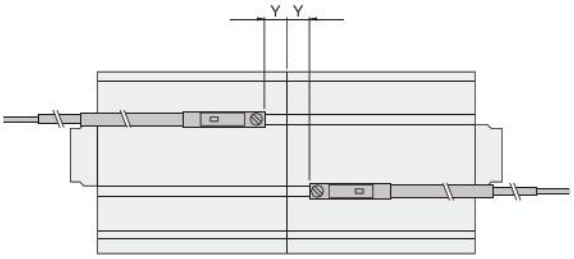


### ■ Solid state type

#### ● Double acting type

mm [in.]

| Code \ Bore | | 12 | 16 | 20 | 25 | 32 | 40 | 50 | 63 | 80 | 100 |
|---|---|---|---|---|---|---|---|---|---|---|---|
| X | Standard type | 7 [0.276] | 7 [0.276] | 11 [0.433] | 11 [0.433] | 13.5 [0.531] | 14.5 [0.571] | 12.5 [0.492] | 15 [0.591] | 20 [0.787] | 25 [0.984] |
| | With bumper (-R) | 10 [0.394] | 10 [0.394] | 15 [0.591] | 16 [0.630] | 15.5 [0.610] | 16.5 [0.650] | 14 [0.551] | 15 [0.591] | 20 [0.787] | 25 [0.984] |
| Y | Standard type | 4 [0.157] | 4 [0.157] | 7.5 [0.295] | 9 [0.354] | 8.5 [0.335] | 10.5 [0.413] | 14.5 [0.571] | 16 [0.630] | 20 [0.787] | 25 [0.984] |
| | With bumper (-R) | 6 [0.236] | 6 [0.236] | 8.5 [0.335] | 9 [0.354] | 6.5 [0.256] | 8.5 [0.335] | 13.5 [0.531] | 16 [0.630] | 20 [0.787] | 25 [0.984] |

#### ● Single acting push type

mm [in.]

| Code \ Bore | 12 | 16 | 20 | 25 | 32 | 40 | 50 |
|---|---|---|---|---|---|---|---|
| X | 15 [0.591] | 15 [0.591] | 14 [0.551] | 14.5 [0.571] | 15.5 [0.610] | 17.5 [0.689] | 16.5 [0.650] |
| Y | 1 [0.039] | 1 [0.039] | 7.5 [0.295] | 5.5 [0.217] | 6.5 [0.256] | 7.5 [0.295] | 10.5 [0.413] |

#### ● Single acting pull type

mm [in.]

| Code \ Bore | 12 | 16 | 20 | 25 | 32 | 40 | 50 |
|---|---|---|---|---|---|---|---|
| X | 7 [0.276] | 7 [0.276] | 11 [0.433] | 11 [0.433] | 13.5 [0.531] | 14.5 [0.571] | 12.5 [0.492] |
| Y | 9 [0.354] | 9 [0.354] | 12.5 [0.492] | 14 [0.551] | 13.5 [0.531] | 15.5 [0.610] | 14.5 [0.571] |

### ■ Reed switch type

#### ● Double acting type

mm [in.]

| Code \ Bore | | 12 | 16 | 20 | 25 | 32 | 40 | 50 | 63 | 80 | 100 |
|---|---|---|---|---|---|---|---|---|---|---|---|
| X | Standard type | 2.5 [0.098] | 2.5 [0.098] | 6.5 [0.256] | 6.5 [0.256] | 9 [0.354] | 10 [0.394] | 8 [0.315] | 10.5 [0.413] | 15.5 [0.610] | 20.5 [0.807] |
| | With bumper (-R) | 5.5 [0.217] | 5.5 [0.217] | 10.5 [0.413] | 11.5 [0.453] | 11 [0.433] | 12 [0.472] | 9.5 [0.374] | 10.5 [0.413] | 15.5 [0.610] | 20.5 [0.807] |
| Y | Standard type | −0.5 [−0.020] | −0.5 [−0.020] | 3 [0.118] | 4.5 [0.177] | 4 [0.157] | 6 [0.236] | 10 [0.394] | 11.5 [0.453] | 15.5 [0.610] | 20.5 [0.807] |
| | With bumper (-R) | 1.5 [0.059] | 1.5 [0.059] | 4 [0.157] | 4.5 [0.177] | 2 [0.079] | 4 [0.157] | 9 [0.354] | 11.5 [0.453] | 15.5 [0.610] | 20.5 [0.807] |

#### ● Single acting push type

mm [in.]

| Code \ Bore | 12 | 16 | 20 | 25 | 32 | 40 | 50 |
|---|---|---|---|---|---|---|---|
| X | 10.5 [0.413] | 10.5 [0.413] | 9.5 [0.374] | 10 [0.394] | 11 [0.433] | 13 [0.512] | 12 [0.472] |
| Y | −3.5 [−0.138] | −3.5 [−0.138] | 3 [0.118] | 1 [0.039] | 2 [0.079] | 3 [0.118] | 6 [0.236] |

#### ● Single acting pull type

mm [in.]

| Code \ Bore | 12 | 16 | 20 | 25 | 32 | 40 | 50 |
|---|---|---|---|---|---|---|---|
| X | 2.5 [0.098] | 2.5 [0.098] | 6.5 [0.256] | 6.5 [0.256] | 9 [0.354] | 10 [0.394] | 8 [0.315] |
| Y | 4.5 [0.177] | 4.5 [0.177] | 8 [0.315] | 9.5 [0.374] | 9 [0.354] | 11 [0.433] | 10 [0.394] |

## ● Lateral load resistant cylinders with magnet

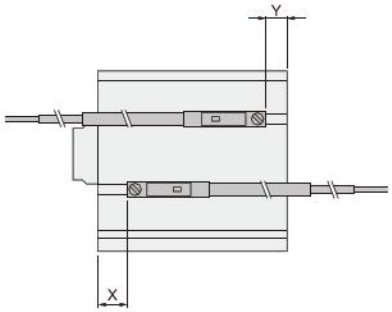


### ■ Solid state type

#### ● Double acting type

mm [in.]

| Code \ Bore | 12 | 16 | 20 | 25 | 32 | 40 | 50 | 63 | 80 | 100 |
|---|---|---|---|---|---|---|---|---|---|---|
| X | 10 [0.394] | 10 [0.394] | 15 [0.591] | 16 [0.630] | 15.5 [0.610] | 16.5 [0.650] | 15.5 [0.610] | 17.5 [0.689] | 26.5 [1.043] | 31.5 [1.240] |
| Y | 6 [0.236] | 6 [0.236] | 8.5 [0.335] | 9 [0.354] | 6.5 [0.256] | 8.5 [0.335] | 11.5 [0.453] | 13.5 [0.531] | 18.5 [0.728] | 23.5 [0.925] |

### ■ Reed switch type

#### ● Double acting type

mm [in.]

| Code \ Bore | 12 | 16 | 20 | 25 | 32 | 40 | 50 | 63 | 80 | 100 |
|---|---|---|---|---|---|---|---|---|---|---|
| X | 5.5 [0.217] | 5.5 [0.217] | 10.5 [0.413] | 11.5 [0.453] | 11 [0.433] | 12 [0.472] | 11 [0.433] | 13 [0.512] | 22 [0.866] | 27 [1.063] |
| Y | 1.5 [0.059] | 1.5 [0.059] | 4 [0.157] | 4.5 [0.177] | 2 [0.079] | 4 [0.157] | 7 [0.276] | 9 [0.354] | 14 [0.551] | 19 [0.748] |

## ● Long stroke cylinders with magnet

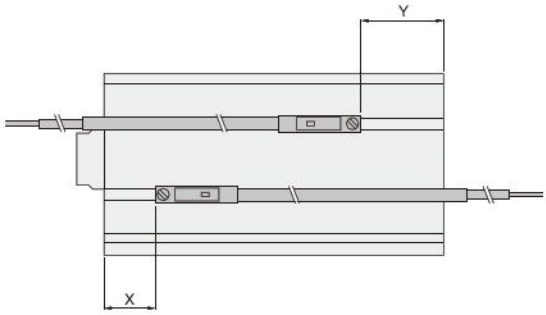


### ■ Solid state type

#### ● Double acting type

mm [in.]

| Code \ Bore | 12 | 16 | 20 | 25 | 32 | 40 | 50 | 63 | 80 | 100 |
|---|---|---|---|---|---|---|---|---|---|---|
| X | 15 [0.591] | 15 [0.591] | 20 [0.787] | 21 [0.827] | 20.5 [0.807] | 21.5 [0.846] | 20.5 [0.807] | 22.5 [0.886] | 31.5 [1.240] | 36.5 [1.437] |
| Y | 12 [0.472] | 12 [0.472] | 15 [0.591] | 14.5 [0.571] | 13.5 [0.531] | 15.5 [0.610] | 12.5 [0.492] | 13.5 [0.531] | 18.5 [0.728] | 23.5 [0.925] |

### ■ Reed switch type

#### ● Double acting type

mm [in.]

| Code \ Bore | 12 | 16 | 20 | 25 | 32 | 40 | 50 | 63 | 80 | 100 |
|---|---|---|---|---|---|---|---|---|---|---|
| X | 10.5 [0.413] | 10.5 [0.413] | 15.5 [0.610] | 16.5 [0.650] | 16 [0.630] | 17 [0.669] | 16 [0.630] | 18 [0.709] | 27 [1.063] | 32 [1.260] |
| Y | 7.5 [0.295] | 7.5 [0.295] | 10.5 [0.413] | 10 [0.394] | 9 [0.354] | 11 [0.433] | 8 [0.315] | 9 [0.354] | 14 [0.551] | 19 [0.748] |

## ● End keep cylinder with magnet

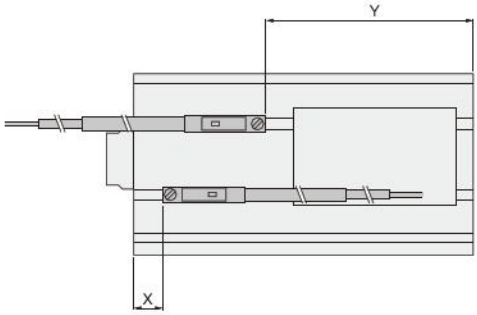


### ■ Solid state type

#### ● Head side end keep

mm [in.]

| Code \ Bore | 16 | 20 | 25 | 32 | 40 | 50 | 63 |
|---|---|---|---|---|---|---|---|
| X | 15.5 [0.610] | 20.5 [0.807] | 21.5 [0.846] | 20.5 [0.807] | 21.5 [0.846] | 20.5 [0.807] | 22.5 [0.886] |
| Y | 36.5 [1.437] | 34.5 [1.358] | 34.5 [1.358] | 43.5 [1.713] | 45.5 [1.791] | 51.5 [2.028] | 54.5 [2.146] |

### ■ Solid state type

#### ● Rod side end keep

mm [in.]

| Code \ Bore | 16 | 20 | 25 | 32 | 40 | 50 | 63 |
|---|---|---|---|---|---|---|---|
| X | 35.5 [1.398] | 35.5 [1.398] | 36.5 [1.437] | 45.5 [1.791] | 46.5 [1.831] | 55.5 [2.185] | 57.5 [2.264] |
| Y | 11.5 [0.453] | 14.5 [0.571] | 14.5 [0.571] | 13.5 [0.531] | 15.5 [0.610] | 11.5 [0.453] | 13.5 [0.531] |

### ■ Reed switch type

#### ● Head side end keep

mm [in.]

| Code \ Bore | 16 | 20 | 25 | 32 | 40 | 50 | 63 |
|---|---|---|---|---|---|---|---|
| X | 11 [0.433] | 16 [0.630] | 17 [0.669] | 16 [0.630] | 17 [0.669] | 16 [0.630] | 16 [0.630] |
| Y | 32 [1.260] | 30 [1.181] | 30 [1.181] | 39 [1.535] | 41 [1.614] | 47 [1.850] | 50 [1.969] |

### ■ Reed switch type

#### ● Rod side end keep

mm [in.]

| Code \ Bore | 16 | 20 | 25 | 32 | 40 | 50 | 63 |
|---|---|---|---|---|---|---|---|
| X | 31 [1.220] | 31 [1.220] | 32 [1.260] | 41 [1.614] | 42 [1.654] | 51 [2.008] | 53 [2.087] |
| Y | 7 [0.276] | 10 [0.394] | 10 [0.394] | 9 [0.354] | 11 [0.433] | 7 [0.276] | 9 [0.354] |

## Body mounting

Jig cylinder mounting holes include both through holes with female mounting thread, and dedicated female mounting threads, for a variety of mountings. For details, see the diagrams below.

### ■Standard cylinders, Double rod cylinders

●Standard cylinders ●Double rod cylinders ●Lateral load resistant cylinders
●Long stroke cylinders ●End keep cylinders

●$\phi$6～$\phi$12 ●$\phi$16 ●$\phi$20, $\phi$25 ●$\phi$32～$\phi$100

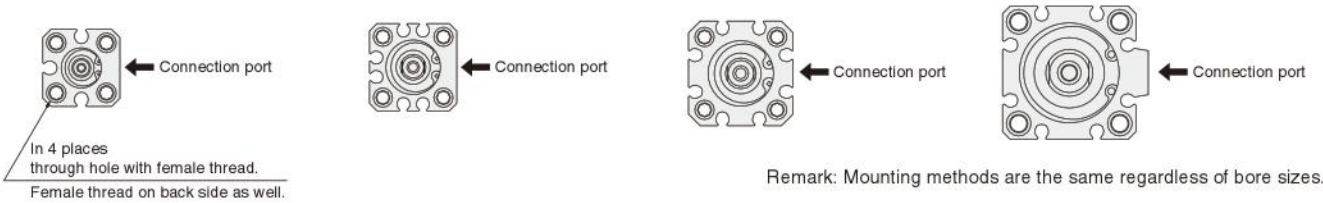


Remark: Mounting methods are the same regardless of bore sizes.

### ■Non-rotating cylinders

●$\phi$6, $\phi$8, $\phi$10

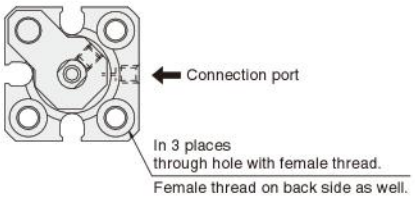


### ■Square rod cylinders

●$\phi$20, $\phi$25 ●$\phi$32～$\phi$63

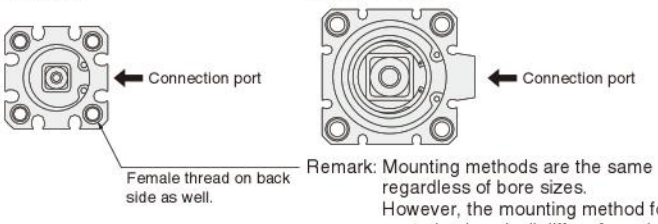


Remark: Mounting methods are the same regardless of bore sizes.
However, the mounting method for "with centering location" differs from the figure above. See p.153.

### ■Tandem cylinders

●$\phi$12 ●$\phi$16 ●$\phi$20, $\phi$25 ●$\phi$32～$\phi$100

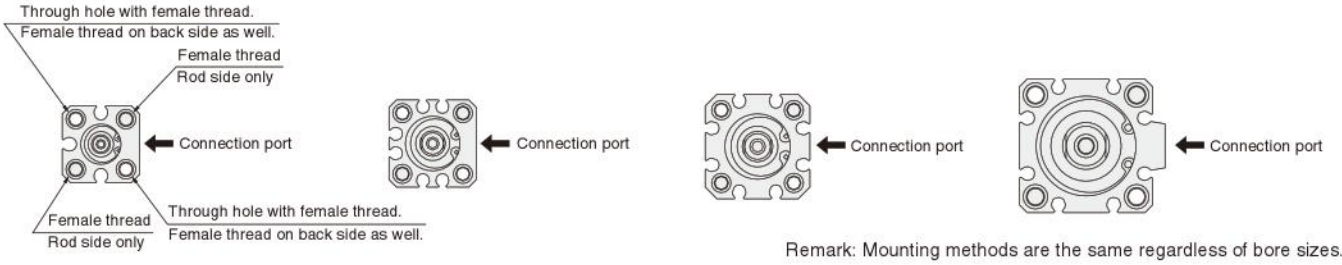


Remark: Mounting methods are the same regardless of bore sizes.

### ■Dual stroke cylinders

●$\phi$12 ●$\phi$16 ●$\phi$20, $\phi$25 ●$\phi$32～$\phi$100

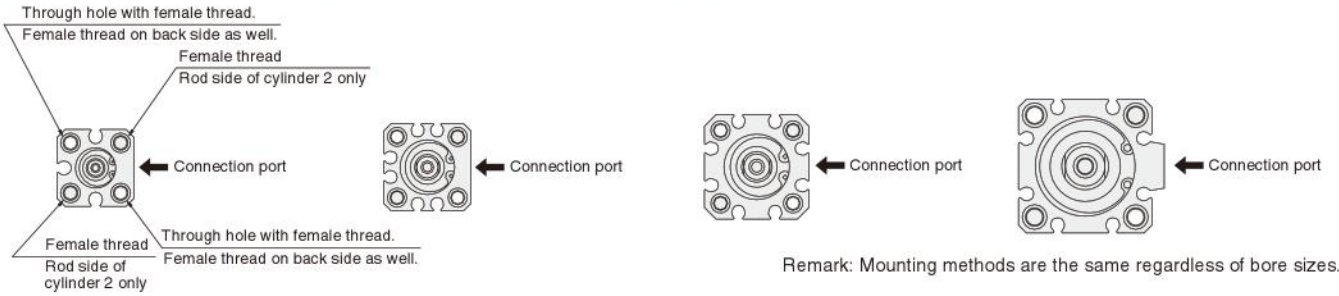


Remark: Mounting methods are the same regardless of bore sizes.

Notes: 1. Avoid applying lateral loads on the piston rod, with the exception of Lateral load resistant cylinders, Long stroke cylinders, and End keep cylinders.
2. When using through holes for mounting, always use the supplied dedicated washers. (except $\phi$6, $\phi$8, and $\phi$10)
3. Mount an external stopper, etc., to prevent the cylinder from being subjected to direct shocks during operation.

● Always use the supplied dedicated washer whenever using a through bolt to directly mount the cylinder body in place.※ Use the bolts shown in the table below to mount in place.
And for bolts used for direct mounting, see p.209.

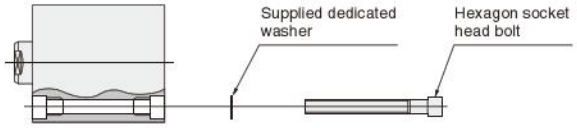


※Washer not available for bore sizes $\phi$6, $\phi$8, and $\phi$10.

| Bore size mm [in.] | 6 [0.236] | 8 [0.315] | 10 [0.394] | 12 [0.472] | 16 [0.630] | 20 [0.787] | 25 [0.984] | 32 [1.260] | 40 [1.575] | 50 [1.969] | 63 [2.480] | 80 [3.150] | 100 [3.940] |
|---|---|---|---|---|---|---|---|---|---|---|---|---|---|
| Hexagon socket head bolt nominal size | M3 | M3 | M3 | M3 | M3 | M3 | M4 | M4 | M5 | M6 | M6 | M8 | M10 |

### ●Tightening thread of the end of piston rod

Since a tool (thin wrench) has been prepared for holding the piston rod when tightening the rod end thread, consult us.

Order code: L115069

## Bracket mounting

- Foot mounting brackets cannot be installed on tandem cylinders and dual stroke cylinders.
- Flange mounting brackets cannot be installed on the head side of tandem cylinders and the stroke 1 side of dual stroke cylinders.
- Clevis mounting brackets cannot be installed on anything except for lateral load resistant cylinders, long stroke cylinders, and end keep cylinders.

## Non-standard stroke

- In most cases, body cutting is used for the manufacturing for non-standard strokes.
  However, body cutting is not used for strokes of less than 5mm for $\phi$ 12 [0.472in.]~$\phi$40 [1.575in.], and strokes of less than 10mm for $\phi$50 [1.969in.]~$\phi$100 [3.940in.]. The collar packed is used for these cases. Moreover, sizes $\phi$6 [0.236in.] ~$\phi$10 [0.394in.] are collar packed only. For delivery, consult us.
  Rod side end keep cylinders cannot be collar packed.
- Dimensions

1. Additional strokes obtained by body cutting remain classed as non-standard strokes.
2. Additional strokes obtained by collar packed are classed as standard strokes in the longer one.

## Lateral Load

- Keep the lateral load on the rod end of the lateral load resistant cylinder, long stroke cylinder, and end keep cylinder, at or below the values shown in the graphs below.
  Note: Avoid applying lateral load on any cylinder types other than the lateral load resistant cylinder, long stroke cylinder, and end keep cylinder.

### Lateral load resistant cylinders

**Standard type (CBDA)**

$\phi$ 12 [0.472in.]~ $\phi$ 20 [0.787in.]

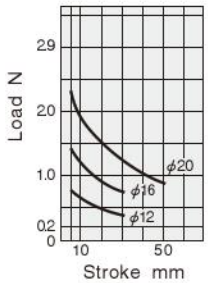


$\phi$ 25 [0.984in.]~ $\phi$ 40 [1.575in.]

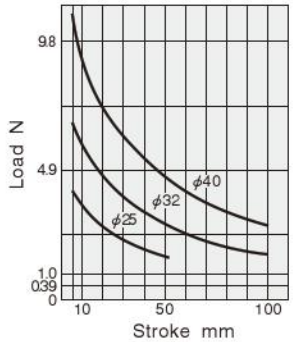


$\phi$ 50 [1.969in.]~ $\phi$ 100 [3.940in.]

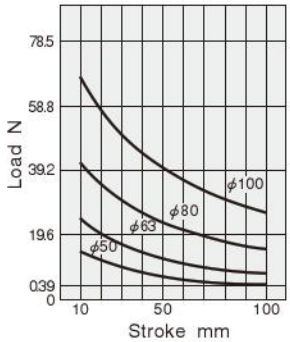


1N = 0.2248lbf.
1mm = 0.0394in.

**Cylinder with magnet (CBDAS)**

$\phi$ 12 [0.472in.]~ $\phi$ 20 [0.787in.]

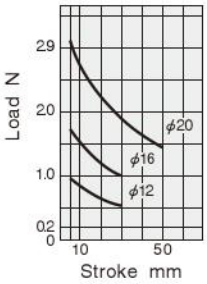


$\phi$ 25 [0.984in.]~ $\phi$ 50 [1.969in.]

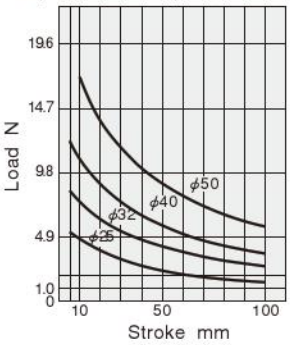


$\phi$ 63 [2.480in.]~ $\phi$ 100 [3.940in.]

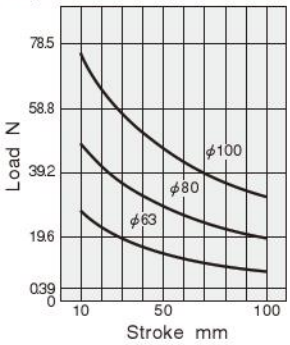


1N = 0.2248lbf.
1mm = 0.0394in.

### Long stroke cylinders, End keep cylinders

**Standard type (CCDA,CCDAK)**

$\phi$ 12 [0.472in.]~ $\phi$ 20 [0.787in.]

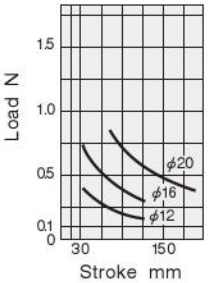


$\phi$ 25 [0.984in.]~ $\phi$ 50 [1.969in.]

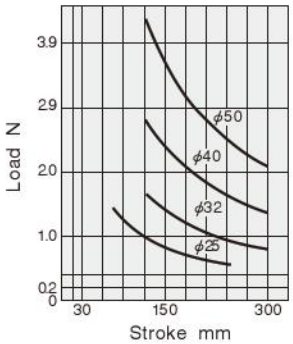


$\phi$ 63 [2.480in.]~ $\phi$ 100 [3.940in.]

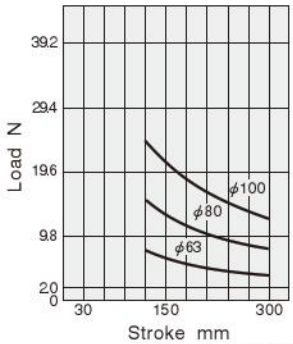


1N = 0.2248lbf.
1mm = 0.0394in.

**Cylinder with magnet (CCDAS, CCDAKS)**

$\phi$ 12 [0.472in.]~ $\phi$ 20 [0.787in.]

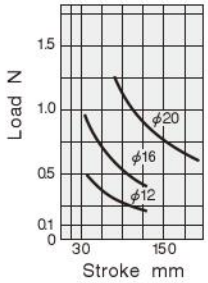


$\phi$ 25 [0.984in.]~ $\phi$ 40 [1.575in.]

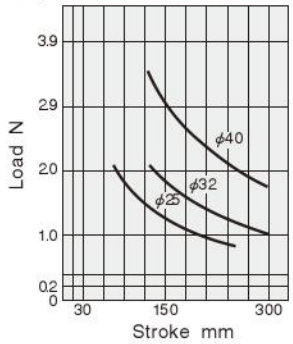


$\phi$ 50 [1.969in.]~ $\phi$ 100 [3.940in.]

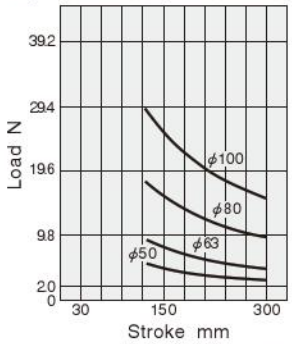


1N = 0.2248lbf.
1mm = 0.0394in.

## Single acting cylinders

Standard cylinders single acting push type
Standard cylinders single acting pull type
Double rod cylinders single acting type
Tandem cylinders single acting push type
Dual stroke cylinders single acting push type
Dual stroke cylinders single acting pull type

If in the above types' application, air is being continuously applied from a connection port, and the spring remains in a compressed state for long periods of time, the piston may sometimes fail to return to its original position even after the air is exhausted. If equipment is to be used in this way over long periods of time, consult us.

## End keep cylinder

**●Control circuit**

1. For control of Jig end keep cylinders, we recommend the use of 2-position, 4-, 5-port valves. Avoid the use of a control circuit of ABR connections (exhaust centers) with 3-position valves that exhaust air from 2 ports.
2. Always use meter-out control for speed control. Meter-in control may result in failure of the locking mechanism to release.

Notes: 1. It is dangerous to supply air to a connection port on a side with a locking mechanism while already exhausted, because the piston rod could suddenly extend (retract). In addition, it could also cause galling of the lock piston and piston rod, resulting in defective operation. Always supply air to the connection port on the opposite side to ensure back pressure is applied.
2. When restarting operations after air has been exhausted from the cylinder due to completion of operations or to an emergency stop, always start by supplying air to the connection port on the opposite side of the locking mechanism.
3. Connect the valve port A (NC) to the connection port on the side with the locking mechanism.

**● Manual operation of the locking mechanism**

While the locking mechanism is normally released automatically through cylinder operations, it can also be released manually. For manual release, insert an M3 × 0.5 screw that has 30mm [1.18in.] below head length into the manual override opening, thread it in about 3 turns into the internal lock piston, and then pull up the screw. To maintain the manual override for adjustment, etc., thread the locknut onto the screw and, with the locking mechanism in a released state, tighten the locknut against the cylinder.

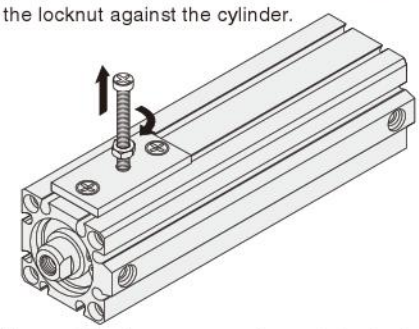

Notes: 1. It is dangerous to release the lock when a load (weight) is present on the piston rod, because it may cause a sudden fall or cause the unintended piston rod's extension (retraction). In this case, always supply air to the connection port opposite the one adjacent to the locking mechanism before releasing the locking mechanism.
2. If the locking mechanism cannot easily be released even with manual override, it could be the result of galling of the lock piston and piston rod. In this case, supply air to the connection port opposite the one adjacent to the locking mechanism before releasing the locking mechanism.
3. Because water, oil, dust, etc., entering via the manual override opening could be a cause of defective locking or other erratic operation, use a cover, etc., for protection when using in locations subject to dripping water, dripping oil, or to large amounts of dust, etc.

## Sensor switch

In the standard cylinder, a magnet for the sensor switch is not built-in.
To install a sensor switch, a cylinder with a built-in magnet for the sensor switch is required.

Notes: 1. For the sensor switch mounting location and moving ranges, see p.199.
2. Contact protection measures are required for connecting inductive loads to reed sensor switches or for when capacitive surges are generated. For contact protection measures, see p.1566.

## Piping

Always thoroughly blow off (use compressed air) the tubing before connecting it to the cylinder. Entering chips, sealing tape, rust, etc., generated during piping work could result in air leaks or other defective operation.

## Atmosphere

1. If using in locations subject to dripping water, dripping oil, etc., or to large amounts of dust, use a cover to protect the unit.
2. The product cannot be used when the media or ambient atmosphere contains any of the substances listed below.
   Organic solvents, phosphate ester type hydraulic oil, sulphur dioxide, chlorine gas, or acids, etc.

## Lubrication

The product can be used without lubrication, if lubrication is required, use Turbine Oil Class 1 (**ISO VG32**) or equivalent.
Avoid using spindle oil or machine oil.

# OPTIONAL ROD END SHAPE PATTERNS



Use an order form of rod end pattern and fill the items on the selected one from among 22 types of optional patterned shapes to obtain made-to-order cylinders of non-standard rod end shapes. The optional rod end shapes can be applied to the entire Jig Cylinders C Series. For the order form containing the optional patterned shapes, contact us.
(Except $\phi$ 6, $\phi$ 8, $\phi$ 10)

## Order Codes

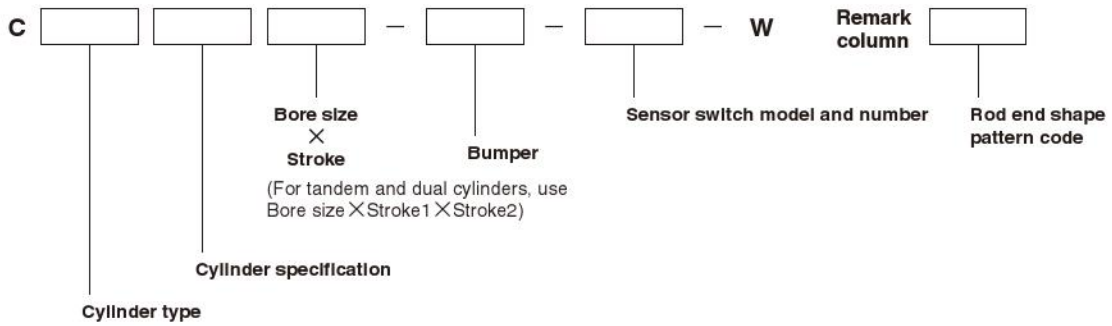


## Piston Rod End Shape Pattern Diagrams (22 Types)

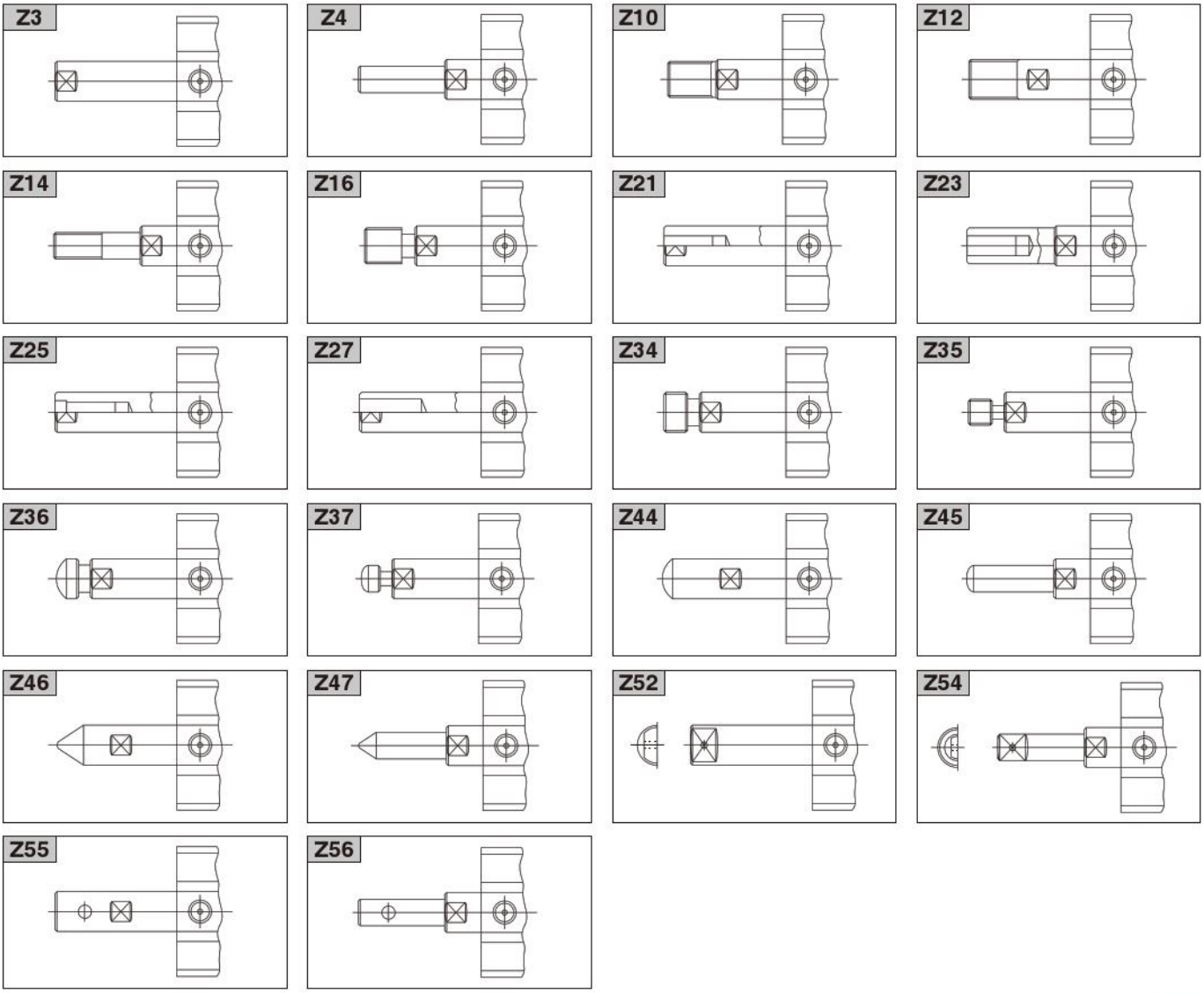

# MOUNTING SCREWS FOR JIG CYLINDERS

●Some types of mounting screws specifically for the Jig Cylinders are available.
Use the order codes below to place orders.

## List of Order Codes

① Mounting screw type: JIS B 1176 Hexagon socket head cap screws
② Surface treatment: Nickel plated

| Applicable cylinder bore size mm [in.] | Mounting screw order code | Screw size | Number of supplied screws |
|---|---|---|---|
| 6 [0.236]<br>8 [0.315]<br>10 [0.394]<br>12 [0.472]<br>16 [0.630]<br>20 [0.787] | CRK124 | M3×25 | 2 |
| | CRK125 | M3×30 | |
| | CRK126 | M3×35 | |
| | CRK127 | M3×40 | |
| | CRK128 | M3×45 | |
| | CRK129 | M3×50 | |
| | CRK130 | M3×30 | 4 |
| | CRK131 | M3×35 | |
| | CRK132 | M3×40 | |
| | CRK133 | M3×45 | |
| | CRK134 | M3×50 | |
| 25 [0.984]<br>32 [1.260] | CRK135 | M4×30 | 4 |
| | CRK136 | M4×35 | |
| | CRK137 | M4×40 | |
| | CRK138 | M4×45 | |
| | CRK139 | M4×50 | |
| | CRK140 | M4×55 | |
| | CRK141 | M4×60 | |
| | CRK142 | M4×65 | |
| | CRK143 | M4×70 | |
| | CRK144 | M4×75 | |
| 40 [1.575] | CRK145 | M5×35 | 4 |
| | CRK146 | M5×40 | |
| | CRK147 | M5×45 | |
| | CRK148 | M5×50 | |
| | CRK149 | M5×55 | |
| | CRK150 | M5×60 | |
| | CRK151 | M5×65 | |
| | CRK152 | M5×70 | |
| | CRK153 | M5×75 | |
| | CRK154 | M5×80 | |
| | CRK155 | M5×85 | |
| | CRK156 | M5×90 | |
| | CRK157 | M5×100 | |
| | CRK158 | M5×110 | |
| 50 [1.969]<br>63 [2.480] | CRK159 | M6×40 | 4 |
| | CRK160 | M6×45 | |
| | CRK161 | M6×50 | |
| | CRK162 | M6×55 | |
| | CRK163 | M6×60 | |
| | CRK164 | M6×65 | |
| | CRK165 | M6×70 | |
| | CRK166 | M6×75 | |
| | CRK167 | M6×80 | |
| | CRK168 | M6×85 | |
| | CRK169 | M6×90 | |
| | CRK170 | M6×100 | |
| | CRK171 | M6×110 | |
| | CRK172 | M6×120 | |
| | CRK173 | M6×130 | |
| | CRK174 | M6×140 | |
| | CRK175 | M6×150 | |

| Applicable cylinder bore size mm [in.] | Mounting screw order code | Screw size | Number of supplied screws |
|---|---|---|---|
| 80 [3.150] | CRK176 | M8×60 | 4 |
| | CRK177 | M8×65 | |
| | CRK178 | M8×70 | |
| | CRK179 | M8×75 | |
| | CRK180 | M8×80 | |
| | CRK181 | M8×85 | |
| | CRK182 | M8×90 | |
| | CRK183 | M8×95 | |
| | CRK184 | M8×100 | |
| | CRK185 | M8×110 | |
| | CRK186 | M8×120 | |
| | CRK187 | M8×130 | |
| | CRK188 | M8×140 | |
| | CRK189 | M8×150 | |
| | CRK190 | M8×160 | |
| | CRK191 | M8×170 | |
| 100 [3.940] | CRK192 | M10×65 | 4 |
| | CRK193 | M10×70 | |
| | CRK194 | M10×75 | |
| | CRK195 | M10×80 | |
| | CRK196 | M10×85 | |
| | CRK197 | M10×90 | |
| | CRK198 | M10×95 | |
| | CRK199 | M10×100 | |
| | CRK200 | M10×110 | |
| | CRK201 | M10×120 | |
| | CRK202 | M10×130 | |
| | CRK203 | M10×140 | |
| | CRK204 | M10×150 | |
| | CRK205 | M10×160 | |
| | CRK206 | M10×170 | |