KOGANEI

Catalog No.BK-C0056

http://www.koganei.co.jp

NEW Products

Smallest Lightest Compact

Basic Cylinders

BC Cylinders

Possible to create all assembly processes with just BC cylinders

Wide range of variations from φ6 to φ125 [0.236 to 4.921]

NEW **Heat resistant specification, clean room specification, with locating pin hole, and more!**

NEW Variations!

- Corrosion resistant, heat resistant, scraper specifications
- Clean system compatible cylinders
- With locating pin hole (option with guide)
- Double rod cylinders: Selectable thread type
- Piston rod end shape (order made)

Basic Cylinders

BASIC CYLINDERS

Lightweight & Compact

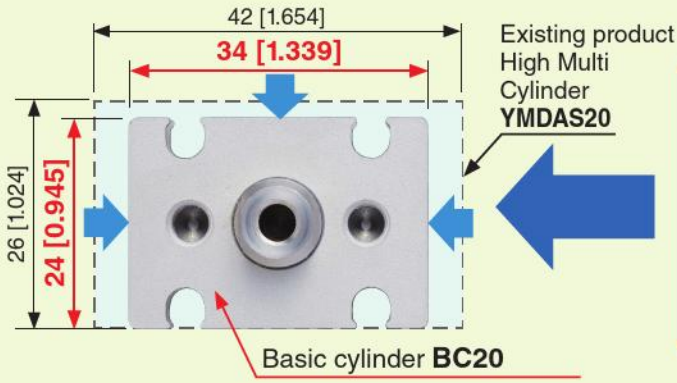

Cross section is 25% smaller
Total length is 30% shorter
40% less mass

* Comparison of 10 mm [0.394 in.] stroke

Direct mounting

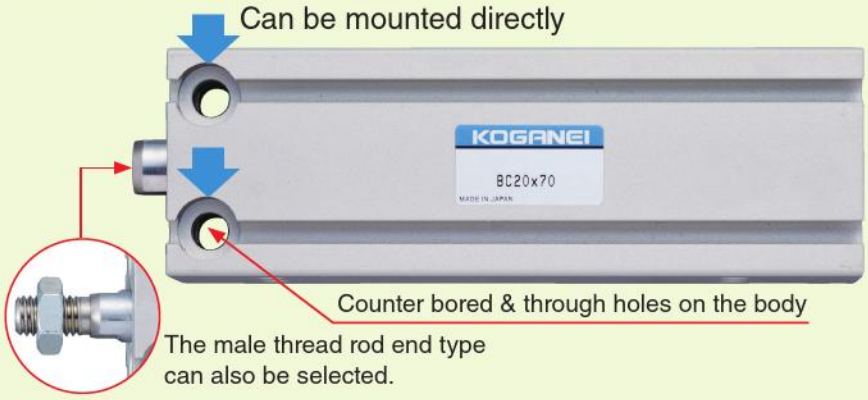

Bracket can be mounted on the head side of ϕ10 to ϕ125 [0.394 to 4.921] models. (except when guide is attached)

Bracket material

ϕ10 to ϕ32 [0.394 to 1.260]: Stainless steel

ϕ40 to ϕ125 [1.575 to 4.921]: Aluminum alloy

Excellent series ranging from ϕ6 to ϕ125 [0.236 to 4.921] (Double acting type and double rod end cylinders)

H1 grease compatibility as standard

(Compliant with H1 grade food equipment specifications)

Uses NSF H1 grade grease.

150°C [302°F] compatibility for heat resistant standard

ϕ6 [0.236] | ϕ8 [0.315] | ϕ10 [0.394] | ϕ12 [0.472] | ϕ16 [0.630] | ϕ20 [0.787] | ϕ25 [0.984] | ϕ32 [1.260] | ϕ40 [1.575] | ϕ50 [1.969]

CAUTION Read the safety precautions on page ❼ before using this product.

Cylinder with guide

ϕ8 [0.315], ϕ12 [0.472], ϕ16 [0.630], ϕ20 [0.787], ϕ25 [0.984], ϕ32 [1.260], ϕ40 [1.575]

Linear guide is mounted to save space and for non-rotating accuracy

With locating pin hole (option)
* Main unit three sides, table two sides

Back side piping is possible

Back side piping is possible as standard for ϕ8 to ϕ25 [0.315 to 0.984] models.

Back side piping is possible for ϕ32 [1.260] and ϕ40 [1.575] models by selecting back side piping block.

Note: Linear guides use low dust grease.

Scraper specification

Compatible with environments where dust and water droplets are present.

● Double acting type

Clean system compatible cylinders

Clean room rating
With dust collection port: Class 5 equivalent
Without dust collection port:
Class 6 equivalent

● Double acting type

● Cylinder with guide
(Without dust collection port)

ϕ63
[2.480]

ϕ80
[3.150]

ϕ100
[3.937]

ϕ125
[4.921]

INDEX

Features 1
Safety Precautions 7
Handling Instructions and Precautions ... 10
Double acting type, single acting push type, single acting pull type ... 23
Double rod end cylinders 54
Cylinder with guide 65
Clean system compatible cylinders ... 73
Bracket 89
Piston rod end shape pattern diagrams ... 91
Additional Parts 92
Sensor switches 94

Variations

Double acting type 23 Page

ϕ6 to ϕ125 [0.236 to 4.921] (ϕ6 [0.236], ϕ8 [0.315], ϕ10 [0.394], ϕ12 [0.472], ϕ16 [0.630], ϕ20 [0.787], ϕ25 [0.984], ϕ32 [1.260], ϕ40 [1.575], ϕ50 [1.969], ϕ63 [2.480], ϕ80 [3.150], ϕ100 [3.937], ϕ125 [4.921])
* Double acting type has excellent low-speed operation (range of speeds: 10 to 500 mm/s [0.394 to 19.685 in/sec]).

Single acting push type 23 Page

ϕ6 to ϕ50 [0.236 to 1.969]
(ϕ6 [0.236], ϕ8 [0.315], ϕ10 [0.394], ϕ12 [0.472], ϕ16 [0.630], ϕ20 [0.787], ϕ25 [0.984], ϕ32 [1.260], ϕ40 [1.575], ϕ50 [1.969])

Single acting pull type 23 Page

ϕ6 to ϕ50 [0.236 to 1.969]
(ϕ6 [0.236], ϕ8 [0.315], ϕ10 [0.394], ϕ12 [0.472], ϕ16 [0.630], ϕ20 [0.787], ϕ25 [0.984], ϕ32 [1.260], ϕ40 [1.575], ϕ50 [1.969])

Double rod end cylinders 54 Page

ϕ6 to ϕ125 [0.236 to 4.921]
(ϕ6 [0.236], ϕ8 [0.315], ϕ10 [0.394], ϕ12 [0.472], ϕ16 [0.630], ϕ20 [0.787], ϕ25 [0.984], ϕ32 [1.260], ϕ40 [1.575], ϕ50 [1.969], ϕ63 [2.480], ϕ80 [3.150], ϕ100 [3.937], ϕ125 [4.921])

Cylinder with guides 65 Page

ϕ8 to ϕ40 [0.315 to 1.575] (ϕ8 [0.315], ϕ12 [0.472], ϕ16 [0.630], ϕ20 [0.787], ϕ25 [0.984], ϕ32 [1.260], ϕ40 [1.575])

◆ Corrosion resistant specification

- Piston rod: Stainless steel
- Snap ring: Electroless nickel plated
- Guide: H1 grease • Packing: NBR

Compatible cylinders

- Double acting type ϕ6 to ϕ125 [0.236 to 4.921] 23 Page
- Single acting push type, single acting pull type
  ϕ6 to ϕ50 [0.236 to 1.969] 23 Page
- Double rod end cylinders ϕ6 to ϕ125 [0.236 to 4.921] 54 Page
- Cylinder with guide ϕ8 to ϕ40 [0.315 to 1.575] 65 Page

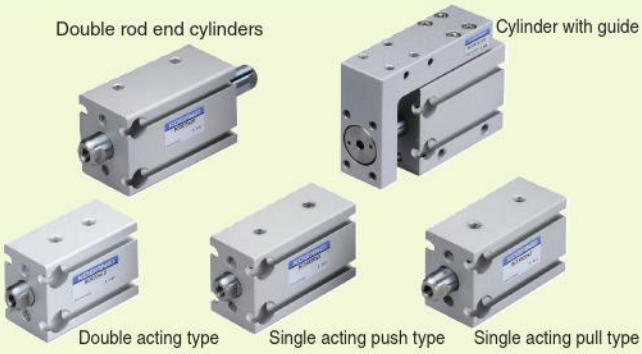

◆ Heat resistant specification

Up to a maximum of 150°C [302°F].

- Packing: fluoro rubber

Note: Sensor switch cannot be attached.

Compatible cylinders

- Double acting type ϕ6 to ϕ125 [0.236 to 4.921] 23 Page
- Cylinder with guide ϕ8 to ϕ40 [0.315 to 1.575] 65 Page

◆ Scraper specification

Compatible with environments where dust and water droplets are present.

Compatible cylinders

- Double acting type ϕ10 to ϕ125 [0.394 to 4.921]
  <Not available for ϕ6 [0.236] or ϕ8 [0.315]> 23 Page

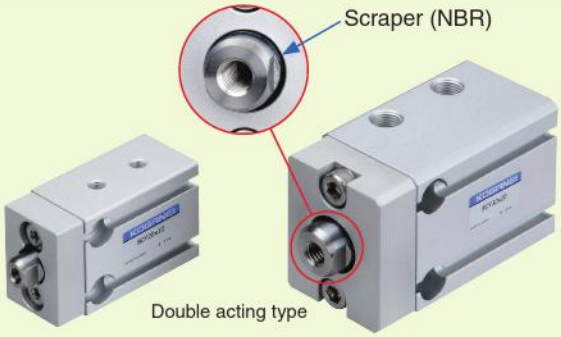

◆ Clean system compatible cylinders

With dust collection port: Class 5 equivalent
Without dust collection port: Class 6 equivalent

Compatible cylinders

- Double acting type (Without dust collection port)
  ϕ6 to ϕ63 [0.236 to 2.480] 73 Page
- Double acting type (With dust collection port)
  ϕ10 to ϕ63 [0.394 to 2.480] 73 Page
- Cylinder with guide (Without dust collection port)
  ϕ8 to ϕ40 [0.315 to 1.575] 82 Page

◆ With locating pin hole (option)

Cylinder body: Pin holes in three sides
Table: Pin holes in two sides

Compatible cylinders

- Cylinder with guide
  ϕ8 to ϕ40 [0.315 to 1.575] 65 82 Page

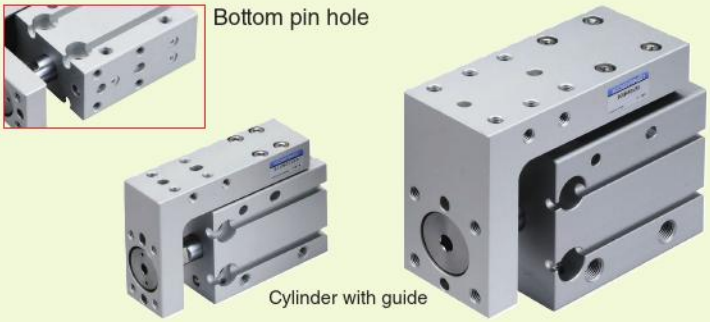

Guide to recommended related products!

For details, see our homepage. **http://www.koganei.co.jp**

F series solenoid valves (F10•F15•F18)

Low-current type and single/double dual-use valves offer energy savings and a low price.

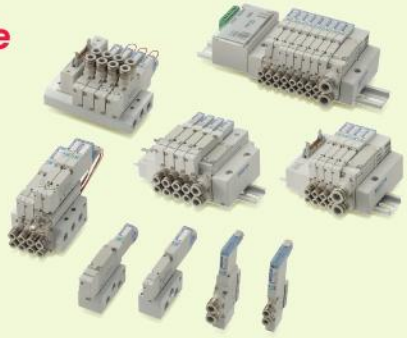

- Switch the manual override button to select single solenoid valve or double solenoid valve functions on the 2-position valve of the F series.
- Different tube sizes for piping are possible with dual-use different size fittings.

iB-Cyclone

High-speed cyclone type water separator!

- Half the volume ratio and 99% higher moisture separation rate when compared with equivalent equipment.
- No element used for maintenance-free operation.
- Auto drain function (NC and NO) available.
- Specifications for ozone resistance, NCU specifications (copper free) compatible as standard.

Smaller size FRZB filter regulator

Filter regulator with moisture and fluid removal function FRZB filter regulator!

- Compact size with short face-to-face dimensions.
- With drain cock and easy to use moisture and fluid removal function.
- Auto drain function (NC and NO) available.
- Bowl guard available.

FRZ Series Air filter•Oil mist filter•Micromist filter

Downsized! Short face-to-face dimensions! Visible filter element!

- Compact size with short face-to-face dimensions.
- It is easy to check the state of the filter element.
- Auto drain function (NC and NO) available.

Two-color LED sensor switches

Two-color LED sensor switches that can be easily positioned and adjusted. Appropriate operation range can be determined by the color of the LED indicator!

● Explanation of operation

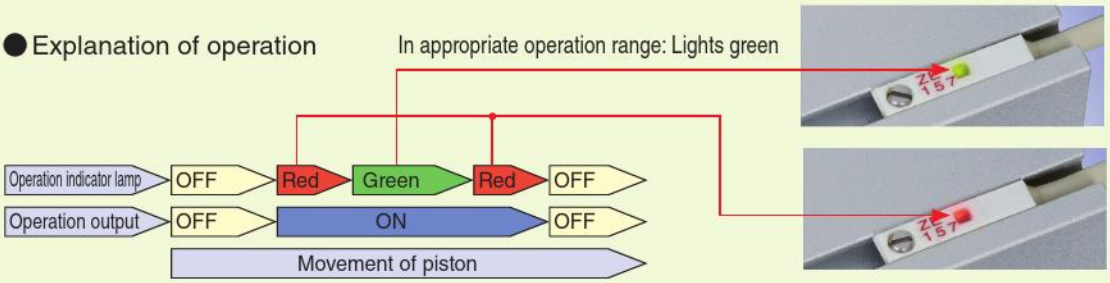

MTV Series water removal valves

Our answer to counteracting condensation! Prevent condensation from developing inside the piping to pneumatic grippers and small cylinders!

● Simply connect it in the pipes! Easy mounting!

iB-Flow Digital flow controller

Constantly monitors cylinder tact times and adjusts automatically!

- ● Digitally set cylinder tact times (operation cycle times).
- ● Tact time controller is always monitoring and adjusting.
- ● Safety mechanism prevents needle from loosening.
- ● Numeric setting of needle opening (0 to 100%).

Quick filling series

Wide range of variations such as many types of quick fittings and speed controllers with quick fittings!

- ● Standard types, mini types, and SUS specifications available.
- ● Diverse variations available such as quick fittings with stop valves, hand valves, check valves, throttle valves, and power reducers.

Safety Precautions (Basic Cylinders)

Always read these precautions carefully before use.

Before selecting and using the products, please read all the safety precautions carefully to ensure proper product use.
The safety precautions described below are to help you use the product safely and correctly, and to prevent injury or damage to you, other people, and assets.
Always observe these safety precautions and the following safety regulations: ISO4414 (Pneumatic fluid power - General rules and safety requirements for systems and their components), JIS B 8370 (General Rules for Pneumatic Systems), and other safety rules.

The directions are ranked according to degree of potential danger or damage: "DANGER", "WARNING!", "CAUTION!", and "ATTENTION!".

⚠ DANGER	Indicates situations that can be clearly predicted as dangerous. Death or serious injury may result if the situation is not avoided. It could also result in damage or destruction of assets.
⚠ WARNING	Indicates situations that, while not immediately dangerous, could become dangerous. Death or serious injury may result if the situation is not avoided. It could also result in damage or destruction of assets.
⚠ CAUTION	Indicates situations that, while not immediately dangerous, could become dangerous. Failure to avoid the situation creates the risk of minor or semi-serious injury. It could also result in damage or destruction of assets.
⚠ ATTENTION	While there is no chance of injury, these points should be observed for appropriate use of the product.

■ This product was designed and manufactured for use in general industrial machinery.

■ When selecting and handling equipment, the system designer or another person with sufficient knowledge and experience should always read the safety precautions, catalog and other literature before commencing operation. Improper handling is dangerous.
■ After reading the catalog, and other documentation, always place them in a location that allows easy availability for reference to users of this product.
■ Whenever transferring or lending the product to another person, always attach the catalog, and other information to the product where they are easily visible in order to ensure that the new user can use the product safely and properly.
■ The danger, warning and caution items listed under these safety precautions do not cover all possible contingencies. Read the catalog carefully, and always keep safety first.

⚠ DANGER

● Do not use the product for the purposes listed below:
1. Medical equipment related to maintenance or management of human lives or bodies
2. Machines or equipment designed for the purpose of moving or transporting people
3. Critical safety components in mechanical devices

This product has not been planned or designed for purposes that require high levels of safety. Using the product in any of the ways described above creates the risk of loss of human life.

● Do not use the product in locations with or near dangerous substances such as flammable or ignitable substances. This product is not explosion-proof. Doing so creates the risk of ignition and fire.

● When mounting the product and workpiece, always make sure they are firmly supported and secured in place. Falling, dropping, or abnormal operation of the product creates the risk of personal injury.

● People using pacemakers, etc., should not approach within 1 meter [3.280 ft] of the product. Getting too close to the product creates the risk of malfunction of a pacemaker due to the strong magnet built into the product.

● Never attempt to modify the product in any way. Doing so creates the risk of injury, electric shock, fire, etc. due to abnormal operations.

● Never attempt inappropriate disassembly, assembly or repair of the product relating to basic construction, or to its performance or to functions. Doing so creates the risk of injury, electric shock, fire, etc.

● Do not allow water to splash on the product. Water spraying on the product, washing the product, or using the product under water creates the risk of malfunction, leading to injury, electric shock, fire, etc.

● While the product is in operation, avoid touching it with your hands or otherwise approaching too close. Also, do not attempt to make any adjustments to internal or attached mechanisms (sensor switch mounting location, disconnection of piping tubes or plugs, etc.) while the product is in operation. This may cause an unintended cylinder movement resulting in injury.

● When operating the product, always install speed controllers, and gradually loosen the needle valve from a choked state to adjust the increase in speed.
Failure to make this adjustment could result in the air supply causing sudden movements, which may put human lives at risk.

● Do not apply excess bending or buckling force to the piston rod. Doing so may cause abnormal wear or damage to the rod or tube and reduce the product's operating life.

● Always link the direction of motion of the load with the axis of the piston rod. If they are not the same, the undue force on the tube and piston rod may cause abnormal wear or damage.

⚠ WARNING

● Do not use the product in excess of its specification ranges. Doing so creates the risk of product breakdown, loss of function, or damage. It could also drastically reduce the product's operating life.

● Before supplying air or electricity to the device and before starting operation, always conduct a safety check of the area where the machine is operating. Unintentional supply of air or electricity creates the risk of electric shock or injury due to contact with moving parts.

● Do not touch terminals or switches while power is turned on. Doing so creates the risk of electric shock and abnormal operation.

● Always check the catalog and other reference materials for correct product wiring and piping. Improper wiring and piping creates the risk of abnormal operation of the cylinder.

● Do not allow the product to be thrown into fire.
Doing so creates the risk of explosion and the release of toxic gases.

● Do not sit on the product, place your foot on it, or place other objects on it.
Doing so creates the risk of injury due to tripping or the product tipping over or falling, resulting in product damage, malfunction or runaway operation.

● Before conducting maintenance, inspection, repair, replacement, or any other similar procedure, always completely cut off all air supply and confirm that residual pressure inside the product or in piping connected to the product is zero.
In particular, be aware that residual air will still be in the air compressor or storage tank. The cylinder may move abruptly, if residual air pressure remains inside the piping, causing injury.

● Do not use the cylinder as a device to absorb the shock or vibration of machinery. Doing so may create the risk of injury or the breakdown of the machinery.

● Do not allow lead wires of sensor switches or other cords to become damaged.
Allowing a cord to become damaged, bent excessively, pulled, rolled up, placed under heavy objects, or squeezed between two objects creates the risk of current leaks or defective continuity that can lead to fire, electric shock, or abnormal operation.

- Do not apply external magnetic field to sensor switches while the cylinder is in operation. Unintended operations could damage equipment or cause injury.
- Use the product within the recommended load and operating speed specifications. Using the cylinder in excess of the recommended load and operating speed specifications could damage the cylinder causing damage to equipment or injury.
- Use safety circuits or design a system that prevents damage to machinery and personal injury when the machine is shut down due to an emergency stop or electrical power failure, etc.
- Install relief valves or other devices to ensure that the cylinder does not exceed its rated pressure when the pressure is increased by external forces on the cylinder. Excessive pressure could lead to a breakdown and damage.
- When the product has been idle for over 48 hours or has been in storage, it is possible that the sliding parts may have become stuck leading to operating delays or sudden movements. Before initial operations, always run a test to check that operating performance is normal.
- Do not use the product near the ocean, in direct sunlight, near mercury vapor lamps, or near equipment that generates ozone. Deterioration of rubber parts caused by ozone may reduce performance and functions or stop functions.
- Because Koganei products may be used under a wide variety of conditions, decisions concerning conformance with a particular system should be made upon the careful evaluation by the person in charge of system design. Assurances concerning expected system performance and safety are the responsibility of the designer who decides system conformity. Be sure to use the latest catalogs and technical materials to study and evaluate specification details, to consider the possibility of machine breakdown, and to configure a system that ensures fail-safe safety and reliability.
- Do not apply force to cylinder rods and tables outside the ranges of allowable lateral load, allowable kinetic energy, allowable moment, and other values shown in the catalog and other documentation. Doing so may cause wear or damage to the rod or tube and reduce the product's operating life.

⚠ CAUTION

- Do not use the product in locations subject to direct sunlight (ultraviolet radiation), in locations with dust, salt, or iron particles, or in locations with media and/or ambient atmosphere that include organic solvents, phosphate ester type hydraulic oil, sulfur dioxide gas, chlorine gas, acids, etc. Such uses could lead to loss of functions within a short period, sudden degradation in performance, or reduced operating life. For details on materials used in the product, refer to the description of materials used in major parts.
- When mounting the product, leave room for adequate working space around it. Failure to do so will make it more difficult to conduct daily inspections or maintenance, which could eventually lead to system shutdown or damage to the product.
- When transporting or mounting a heavy product, firmly support the product using a lift or support, or use multiple people to ensure personal safety.
- Do not bring magnetic media or other magnetic materials within 1 meter [3.280 ft] of the product. Doing so creates the risk of damage to data on the magnetic media due to magnetism.
- Do not use the sensor switch in locations subject to large electrical currents or strong magnetic fields. It could result in erratic operation.
  Also avoid using magnetic material for any parts used for mounting. Doing so creates the risk of magnetism leakage that causes malfunctions.
- Do not bring the product too close to magnetic material. The sensor switch may malfunction or operate erratically if the product is located near a magnet or where a magnetic field is generated.
- Never use another companies' sensor switches with these products.
  Doing so may cause malfunctions or runaway operation.
- Do not scratch, dent, or deform the actuator by sitting or standing on the product, or by placing objects on it. Doing so creates the risk of damage to or breakage of the product, resulting in operational shutdown or degraded performance.
- Always post an "operations in progress" sign for installations, adjustments, or other operations, to avoid unintentional supplying of air or electrical power, etc. Unintended power or air supply can cause electric shock and sudden cylinder movement, creating the risk of personal injury.
- Do not subject any cords, such as the sensor switch lead wires attached to cylinders, to excessive loads by pulling on them, lifting the product by them, or placing heavy objects on them. Doing so may cause current leakage or defective continuity leading to fire, electric shock, or abnormal operation.
- Using extremely dry air with a dew point lower than -20°C [-4°F], may affect the quality of the lubricating oil used. This may cause loss of functions, shorter operating life, degraded performance or other problems.
- Be sure to wash your hands thoroughly after touching the heat resistant specification and clean room specification grease. Smoking a cigarette with hands soiled with grease creates the risk of emission of toxic gas when grease adhering to the cigarette burns. (The grease used is chemically very stable at normal temperature, but toxic gases will be generated when its temperature exceeds 260°C [500°F]).

⚠ ATTENTION

- Whenever considering use of this product in situations or environments not specifically noted in the catalog, or in applications where safety is an important requirement such as in aircraft facilities, combustion equipment, leisure equipment, safety equipment, and other places where human life or assets may be greatly affected, take adequate safety precautions such as allowing plenty of margin for ratings and performance, or fail-safe measures.
  Be sure to contact Koganei before use in such applications.
- Moving parts of machinery should be isolated with protective covers so as not to come into direct contact with human bodies.
- Do not configure controls that would allow workpieces to fall if power fails.
  Configure the control system to prevent workpieces or tables from falling if the machinery stops during an emergency stop or power outage.
- When handling the product, wear protective gloves, safety glasses, safety shoes, and other protective clothing whenever necessary.
- When the product can no longer be used or is no longer necessary, dispose of it appropriately as industrial waste.
- Pneumatic equipment can exhibit degraded performance and function over its operating life. Always conduct daily inspections of the pneumatic equipment, and confirm that all requisite system functions are satisfied, to prevent accidents from happening.
- For inquiries about the product, consult your nearest Koganei sales office or Koganei Overseas Department. The addresses and telephone numbers are shown on the back cover of this catalog.

⚠ Other

- Always observe the following items.
  1. When using this product in pneumatic systems, always use genuine Koganei parts or compatible parts (recommended parts).
     When conducting maintenance and repairs, always use genuine Koganei parts or compatible parts (recommended parts).
     Always observe the prescribed methods and procedures.
  2. Never attempt inappropriate disassembly or assembly of the product in relation to its basic construction, performance, or functions.

Koganei cannot be held responsible for any problems that occur as a result of these safety precautions not being properly observed.

Design and selection

⚠ WARNING

1. Check the specifications.
Read the specifications carefully to ensure correct use within the product's specified voltage, current, temperature, and shock ranges, failure to do so could result in a breakdown or defective operation.

2. Be careful when mounting cylinders in close proximity to each other.
Refer to page 99 if you are mounting two or more cylinders with sensor switches in parallel. The magnetic field interference may cause the sensor switches to malfunction.

3. Be careful of how long the sensor switch is on when detecting the position in mid-stroke.
Be aware that, when the sensor switch is mounted at an intermediate point of the cylinder stroke to detect the passing of the piston, if the piston is moving too fast, the length of time the sensor switch operates is too short to delete the piston passing (so loads such as programmable controllers are not operated).
The highest detectable cylinder speed is

$$V[\text{mm/s}] = \frac{\text{Sensor switch operating range mm [in]}}{\text{Time required for load operation [ms]}} \times 1000$$

4. Keep wiring as short as possible.
Lead wires for solid state sensor switches should be within 30 m [98.400 ft] as stipulated by EN standards. For reed sensor switches, longer wiring (10 m [32.800 ft] or longer) will lead to a larger capacitive surge, which reduces the operating life of sensor switches. When longer wiring cannot be avoided, provide the protective circuit described in the catalog. For details, see page 98.
If the load is inductive or capacitive, provide the appropriate protective circuit as described in the catalog. For details, see page 98.

5. Avoid repeated bending or excessive pulling of lead wires.
Applying repeated bending stress or tension force on the lead wires could break them.

6. Check for leakage current.
With 2-lead wire solid state sensor switches, current (leakage current) flows to the load to activate the internal circuit even when turned off. Ensure that the circuit satisfies the following inequality.
Input off current of programmable controller > Leakage current
If the above inequality cannot be satisfied, select a 3-lead wire solid state sensor switch. And, if n sensor switches are connected in parallel, the leakage current increases by n times.

7. Do not use reed sensor switches at low speeds below 30 mm/s [1.181 in/sec]. Doing so may cause erratic operation or loss of functions.

⚠ CAUTION

1. Check for internal voltage drop of sensor switches.
Connecting reed sensor switches with indicator lamps, or 2-lead wire solid state sensor switches, in series causes increasing internal voltage drop and the load may fail to activate. Connecting n switches will drop the internal voltage by n times as much.
Ensure that the circuit satisfies the following inequality:
Supply voltage – Internal voltage drop x n > Minimum operating voltage of the load
For relays with a rated voltage lower than 24 VDC, ensure that the above inequality is satisfied even when n = 1. If the above inequality cannot be satisfied, select a reed sensor switch without an indicator lamp.

2. Do not use Koganei sensor switches with other companies' cylinders.
The sensor switches are designed for use with Koganei cylinders only. They may not function correctly if used with other companies' cylinders.

Installation and adjustment

⚠ WARNING

1. Do not apply an external magnetic field to the sensor switch while the cylinder is in operation.
This may cause unintended operation, thereby damaging the device or causing injury.

⚠ CAUTION

1. Be aware of the environment in which you install the sensors and cylinders.
Do not use the sensor switch in locations subject to large electrical currents or strong magnetic fields. It could result in erratic operation.
Also avoid using magnetic material for any parts used for mounting. It could result in erratic operation.

2. Install sensor switches in the center of their operating range.
Adjust the mounting position of a sensor switch so that the piston stops in the center of its operating range (the range while the sensor is ON). Operations will be unstable if mounted at the end of the operating range (at the boundary near on and off). Also be aware that the operating range will vary with changes in temperature.

3. Follow the tightening torque guidelines for mounting sensor switches.
Over-tightening beyond the allowed tightening torque may damage the mounting threads, mounting brackets, sensor switches and other components. However, insufficient tightening torque may cause the sensor switch position to change, resulting in unstable operation. Follow the instructions on page 11 concerning the tightening torque.

4. Do not carry the cylinder by its mounted sensor switch's lead wires.
After mounting a sensor switch on the cylinder, do not carry the cylinder by grabbing the lead wires. Never do this, as it may damage not only the lead wires but may also apply stress to the inside of the sensor switch that may damage internal elements.

5. Do not drop the sensor switches or bump them against other objects.
Do not apply excessive impact (294.2 m/s2 [30 G] or more) by hitting, dropping, or colliding with the sensor switch during handling.
In the case of reed sensor switches, such behavior may cause the contact to malfunction, thereby giving a signal output or turning off the signal instantaneously. And, this may change the contact interval, thereby deteriorating the sensor switch's sensitivity. As such, this may cause the device to malfunction. Even if the sensor switch case is not damaged, the inside of the sensor switch may be damaged, causing erratic operation.

Safety Precautions (Sensor Switches)

Wiring

⚠ DANGER

1. **Prevent nearby moving objects from coming into contact with sensor switches.**
   When cylinders equipped with sensor switches are moving or when moving objects are nearby, do not let them come into contact with each other. In particular, lead wires may become worn or damaged causing unstable operation of the sensor switch. In the worst case, this may result in current leaks or electrical shock.
2. **Always turn off the power before doing wiring work.**
   Doing wiring work while the power is on may result in electric shock. Also, incorrect wiring could damage the sensor switch in an instant. Turn on the power only after the wiring work is complete.

⚠ WARNING

1. **Check the catalog and other materials to ensure that the sensor switch is wired correctly.**
   Incorrect wiring may result in abnormal operation.
2. **Do not share wiring with power or high voltage lines.**
   Avoid wiring in parallel to or in the same conduit with power lines and high-voltage lines. Noise from such wiring could cause the sensor switch and control circuit to operate erratically.
3. **Avoid repeated bending or excessive pulling of lead wires.**
   Applying repeated bending stress or tension force on the lead wires could break them.
4. **Check the wiring polarity.**
   Be sure that the wiring connections are correct for sensor switches that specify polarity (+, -, output). Incorrect polarity could result in damage to sensor switches.

⚠ CAUTION

1. **Avoid short circuiting loads.**
   Turning on the sensor switch while the load is short-circuited causes overcurrent, which will damage the sensor switch in an instant.
   Example of short-circuit load: Sensor switch's output lead wire is directly connected to the power supply.
2. **Position sensor switches in the center of their operating range.**
   Operating output may be unstable, depending on the operating environment, if positioned at the edge of the operating range.
3. Solid state sensor switches that are compliant with the EMC standards (EN61000-6-2 and EN60947-5-2) are not resistant to surges from lightning. Use countermeasures on the machine to protect them from lightning surges.
4. Use an internal element to absorb surges for direct activation of loads that generate surges.

Handling Instructions and Precautions

General precautions

Piping

Before installing piping to the cylinder, thoroughly flush the inside of the pipes (with compressed air). Machining chips, sealing tape, rust and other debris remaining from the piping work may result in air leaks and malfunctions.

Air supply

1. Use air as the medium. For the use of any other medium, consult your nearest Koganei sales office.
2. Air used for the cylinder should be clean air that contains no degraded compressor oil, etc. Install an air filter (filtration of 40 μm or less) near the cylinder or valve to remove dust and accumulated liquid. Also drain the air filter periodically. If liquid or dust gets into the cylinder, it may cause defective operation.

Lubrication

The cylinder can be used without lubrication, however, if lubrication, such as a lubricator, is used, use turbine oil type 1 (ISO VG32) or an equivalent. Avoid using spindle oil or machine oil.

Environment

1. Cover the unit when using it in locations where it might be subject to excessive dust, dripping water, dripping oil, etc.
2. Do not use the cylinder in environments which may be corrosive. Using the cylinder in these types of environments may result in damage or defective operation.
3. Do not use it in excessively dry conditions.
4. Do not use the cylinder if the ambient temperature is over 60°C [140°F], doing so may result in damage or defective operation. Also, consider anti-freezing measures if the temperature is less than 5°C [41°F], because moisture may freeze and result in damage or defective operation.

Handling

1. Do not place your hands in the way of the cylinder when it is operating.
2. Be careful that no part of your body is pinched between the end plate and the cylinder body when the cylinder is retracting.
3. Confirm that there is no pressurized air in the cylinder before starting maintenance work.
4. Use the cylinder within its operating speed range. Even if the speed is within the allowable range, install an external stopper to prevent directly impacting the cylinder, if the load is large or the allowable kinetic energy is exceeded.
5. Use a separate cushioning device, such as a shock absorber, if noise or vibration is an issue.

Warranty and General Disclaimer

1. Warranty Period
   The warranty period for Koganei products is 12 months from the date of delivery.
2. Scope of Warranty and General Disclaimer

(1) The Koganei product warranty covers individual products. When a product purchased from Koganei or from an authorized Koganei distributor malfunctions during the warranty period in a way that is attributable to Koganei responsibility, Koganei will repair or replace the product free of charge. Even if a product is still within the warranty period, its durability is determined by its operation cycles and other factors. Contact your nearest Koganei sales office or the Koganei Overseas Department for details.

(2) Koganei shall not be held responsible for any losses or for any damage to other machinery caused by breakdown, loss of function, or loss of performance of Koganei products.

(3) Koganei shall not be held responsible for any losses due to use or storage of the product in a way that is outside of the product specifications prescribed in Koganei catalogs and instruction manuals, and/or due to actions that violate the mounting, installation, adjustment, maintenance or other safety precautions.

(4) Koganei shall not be held responsible for any losses caused by breakdown of the product due to factors outside the responsibility of Koganei, including but not limited to fire, natural disaster, the actions of third parties, and intentional actions or errors by you.

General precautions

Other

The piston of the single acting type may not retract (return) even when the air is exhausted if air is continuously supplied to the piping port so that its spring is left compressed for a long period (more than 48 hours).Use a double acting cylinder if it will be left unused for long periods such as this.

About the circuit to prevent rod pop-out

Rod pop-out prevention circuit
Using the cylinder in combination with the speed controller shown in the following diagram is effective for controlling speed and preventing rod pop-out.

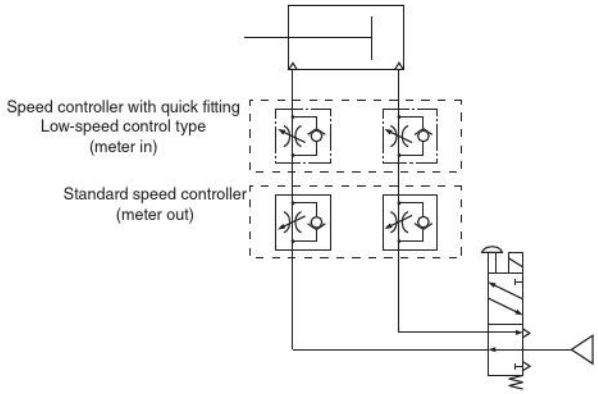

Note: Install the speed controller as close as possible to the cylinder.

Mounting

Mounting

1. The cylinder can be mounted in any orientation, but the mounting surface must be flat. If the cylinder twists or bends when mounted, not only will it be inaccurate, but there may be air leaks and defective operation.
2. Note that a mounting surface that is scratched or dented can adversely affect flatness.
3. If the cylinder is subject to large impacts, use a support structure, such as brackets, to hold the cylinder body in addition to the mounting bolts.
4. Be sure that the cylinder body and the mounting bolts are of sufficient strength.
5. In cases where loosening of bolts due to impact and/or vibration may be a factor, consider looseness prevention measures.
6. Do not scratch or dent the sliding parts of the piston rod. Doing so could damage the packing and cause air leaks.
7. The piston rod and linear guides are coated with grease, do not wipe it off. Doing so may cause defective operation. If you cannot see the lubricant, apply some grease.
   The grease to be used depends on the specification. Contact Koganei for details.
8. Note that you cannot use the tapped holes on the front-surface (rod side) of the cylinder if you mount it using the counterbored holes on the cylinder body.
   (Double acting type, single acting push type, single acting pull type, double acting double rod end type from ϕ10 to ϕ32 [0.394 to 1.260])
9. If you are using a combination of a cylinder and guide, use cylinder joints for flexible connections.

Mounting with brackets

We recommend using brackets for mounting if you are using the cylinder in the following conditions. (BCZ-BK□ or -BK)

- Stroke : If using a cylinder with a longer than standard stroke.
- Mounting: If using a vertical or ceiling mount for a cylinder with a long stroke (guideline: Products with bore of ϕ20 [0.787] or greater and stroke of 50 mm [1.969 in.] or longer).
- Process : If using a cylinder for large static loads, such as for pressing processes.
- Other : If using a cylinder in a location subject to extreme vibrations.

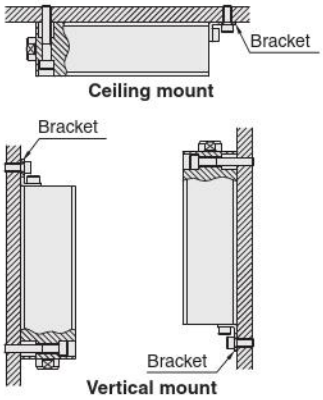

Tightening torque lists

● Fittings

N·m [ft·lbf]

Thread size	Tightening torque
M3×0.5	0.7 [0.516]
M5×0.8	1.0 to 1.5 [0.738 to 1.106]
R1/8	4.5 to 6.5 [3.319 to 4.794]
R1/4	7 to 9 [5.163 to 6.638]
R3/8	12.5 to 14.5 [9.220 to 10.695]

● Workpiece mounting (Cylinder with guide)

N·m [ft·lbf]

Thread size	Tightening torque
M3×0.5	0.63 [0.465]
M4×0.7	1.5 [1.106]
M5×0.8	3.0 [2.213]
M6×1	5.2 [3.836]

● Plugs (Cylinder with guide)

N·m [in·lbf]

Thread size	Tightening torque
M3×0.5	0.3 [2.655]
M5×0.8	0.4 [3.540]

● Cylinder & bracket mounting

N·m [ft·lbf]

Thread size	Tightening torque	
	Cylinder	Bracket
M3×0.5	1.2 [0.885]	
M4×0.7	2.7 [1.992]	
M5×0.8	5.4 [3.983]	
M6×1	9.2 [6.786]	
M8×1.25	22 [16.227]	
M10×1.5	44 [32.454]	
M12×1.75	76 [56.058]	
M16×2	190 [140.1]	
M20×2.5	370 [272.9]	

* For both mounting to cylinder or to a mating surface.

● Sensor switch mounting

Tightening torque for the set screw: 0.1 to 0.2 N·m [0.885 to 1.770 in·lbf]

Mounting workpiece to cylinder with guide

NOTE
1. The table is supported by the linear guide, so be careful to avoid strong impact and excess moment when mounting workpieces.
2. Hold the table when securing the workpiece to the table with bolts. If you hold the body when tightening the bolts, it reduces the precision by applying too large moment on the guide.

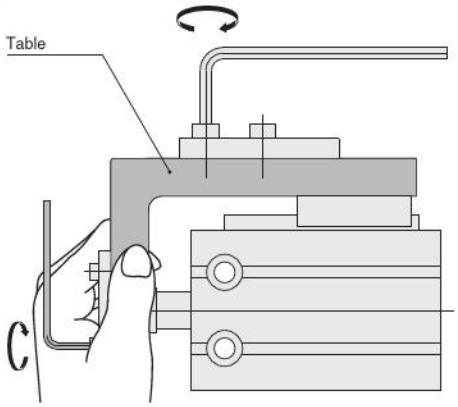

List of recommended mounting bolts

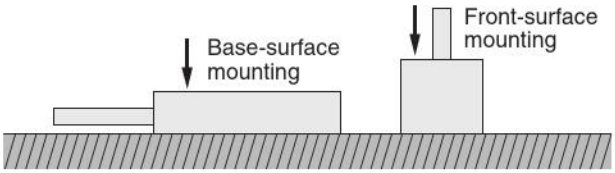

■ Base-surface mounting

● Double acting type ● Single acting type (push, pull) ● Double rod ● With guide

Cylinder bore mm [in.]	Recommended mounting bolts
6 [0.236]	M3 × 12
8 [0.315]	M3 × 12
10 [0.394]	M3 × 16
12 [0.472]	M4 × 16
16 [0.630]	M4 × 20
20 [0.787]	M5 × 25
25 [0.984]	M5 × 30
32 [1.260]	M6 × 35
40 [1.575]	M8 × 45
50 [1.969]	M10 × 55
63 [2.480]	M12 × 65
80 [3.150]	M12 × 80
100 [3.937]	M16 × 110
125 [4.921]	M20 × 130

Use bolts longer than those in the table above when fastening the cylinder.

■ Front-surface mounting

● Double acting type ● Single acting type (push, pull) ● Double rod

Cylinder bore mm [in.]	Recommended mounting bolts		
	Double acting type	Single acting type	Double rod
50 [1.969]	M6 × 35 + stroke	M6 × 55 + stroke	M6 × 45 + stroke
63 [2.480]	M8 × 40 + stroke	–	M8 × 50 + stroke
80 [3.150]	M10 × 45 + stroke	–	M10 × 55 + stroke
100 [3.937]	M10 × 55 + stroke	–	M10 × 55 + stroke
125 [4.921]	M12 × 55 + stroke	–	M12 × 55 + stroke

Use bolts longer than those in the table above when fastening the cylinder.

Allowable kinetic energy (except cylinder with guide)

Use less kinetic energy on the cylinder than indicated in the table below.

Cylinder bore mm [in.]	Allowable kinetic energy (J [ft·lbf])	
	Double acting, double rod	Single acting (push & pull)
6 [0.236]	0.008 [0.006]	0.004 [0.003]
8 [0.315]	0.014 [0.010]	0.007 [0.005]
10 [0.394]	0.022 [0.016]	0.012 [0.009]
12 [0.472]	0.032 [0.024]	0.017 [0.013]
16 [0.630]	0.057 [0.042]	0.03 [0.022]
20 [0.787]	0.09 [0.066]	0.05 [0.037]
25 [0.984]	0.14 [0.103]	0.08 [0.059]
32 [1.260]	0.23 [0.170]	0.13 [0.096]
40 [1.575]	0.36 [0.266]	0.21 [0.155]
50 [1.969]	0.56 [0.413]	0.32 [0.236]
63 [2.480]	0.89 [0.656]	–
80 [3.150]	1.4 [1.033]	–
100 [3.937]	2.2 [1.623]	–
125 [4.921]	3.5 [2.582]	–

● Use the following equation to calculate the kinetic energy of loads.

$$Ex = \frac{m}{2} v^2$$

Ex: Kinetic energy (J)
m: Mass of load (kg)
v: Piston speed (m/s)

Allowable lateral load (except cylinder with guides)

Apply the maximum allowable lateral load or less to the cylinder than indicated in the table below.

Equation

● ϕ6 to ϕ12 [0.236 to 0.472], ϕ50 to ϕ125 [1.969 to 4.921]

Maximum allowable lateral load $W \leqq \frac{\ell_2 - A}{\ell_1 + \ell_2 + St} \cdot R$

● ϕ16 to ϕ40 [0.630 to 1.575]

Maximum allowable lateral load $W \leqq \frac{\ell_2}{\ell_1 + \ell_2 + St} \cdot R$

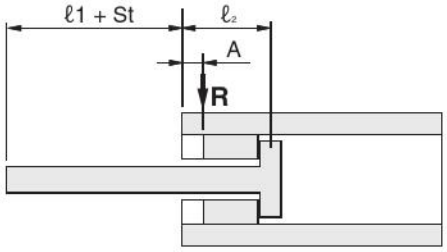

Cylinder bore mm [in.]	Allowable lateral load R N [lbf]	ℓ_1 mm [in.]	ℓ_2 mm [in.]	A mm [in.]
6 [0.236]	1.0 [0.225]	4.0 [0.157]	13.8 [0.543]	3.8 [0.150]
8 [0.315]	1.8 [0.405]	4.0 [0.157]	14.3 [0.563]	4.3 [0.169]
10 [0.394]	2.7 [0.607]	4.0 [0.157]	14.4 [0.567]	4.3 [0.169]
12 [0.472]	4.0 [0.899]	5.0 [0.197]	14.0 [0.551]	3.5 [0.138]
16 [0.630]	7.0 [1.574]	5.0 [0.197]	15.0 [0.591]	–
20 [0.787]	11.0 [2.473]	6.0 [0.236]	17.5 [0.689]	–
25 [0.984]	17.2 [3.867]	6.0 [0.236]	18.0 [0.709]	–
32 [1.260]	28.1 [6.317]	7.0 [0.276]	18.5 [0.728]	–
40 [1.575]	44.0 [9.891]	7.0 [0.276]	23.0 [0.906]	–
50 [1.969]	68.7 [15.444]	8.0 [0.315]	27.3 [1.075]	8.0 [0.315]
63 [2.480]	109.1 [24.526]	8.0 [0.315]	33.0 [1.299]	8.0 [0.315]
80 [3.150]	175.9 [39.542]	10.0 [0.394]	32.5 [1.280]	8.0 [0.315]
100 [3.937]	274.9 [61.798]	12.0 [0.472]	44.5 [1.752]	9.0 [0.354]
125 [4.921]	429.5 [96.552]	16.0 [0.630]	50.0 [1.969]	9.0 [0.354]

Cylinder with guide, allowable kinetic energy

① ϕ8 to ϕ20 [0.315 to 0.787]

Model	BCG□8	BCG□12	BCG□16	BCG□20
Allowable kinetic energy J [ft·lbf]	0.0084 [0.006]	0.0084 [0.006]	0.020 [0.015]	0.044 [0.032]

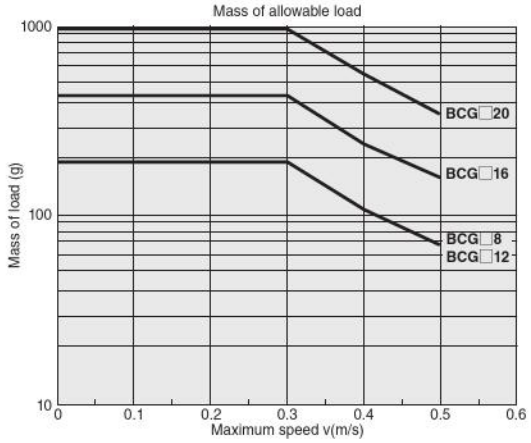

② ϕ25 to ϕ40 [0.984 to 1.575]

Model	BCG□25	BCG□32	BCG□40
Allowable kinetic energy J [ft·lbf]	0.051 [0.038]	0.082 [0.060]	0.134 [0.099]

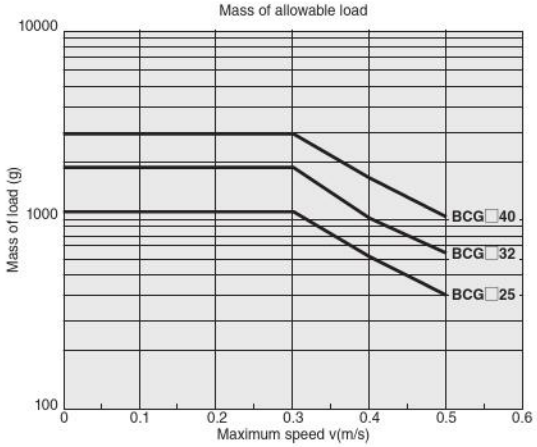

Allowable bending moment for cylinder with guide

Applying more than the allowable bending moment causes the guide to rattle, reduces precision, and has a bad effect on operating life.

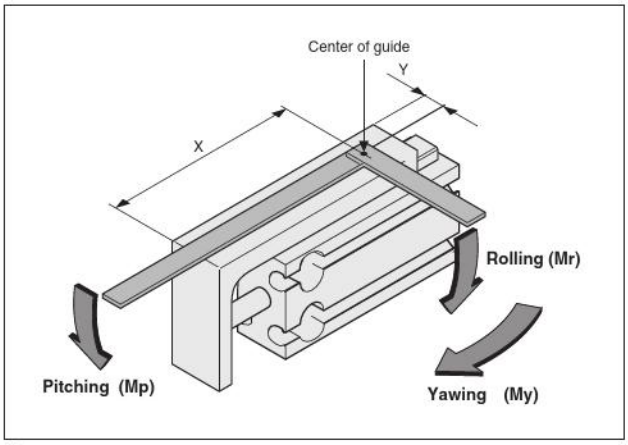

● Use the center of the guide as shown in the diagram as the reference for the center of moment.

■ Allowable bending moment

N·m [ft·lbf]

Model	Mp (pitching)	Mr (rolling)	My (yawing)
BCG□8, BCG□12	0.12 [0.089]	0.12 [0.089]	0.21 [0.155]
BCG□16	0.4 [0.295]	0.4 [0.295]	0.68 [0.502]
BCG□20	1.5 [1.106]	1.8 [1.328]	2.2 [1.623]
BCG□25	2.18 [1.608]	2.18 [1.608]	4.18 [3.083]
BCG□32	4.46 [3.290]	4.46 [3.290]	7.31 [5.392]
BCG□40	6.7 [4.942]	8 [5.901]	13.7 [10.105]

Heat resistant specification

N·m [ft·lbf]

Model	Mp (pitching)	Mr (rolling)	My (yawing)
BCGF8, BCGF12	0.11 [0.081]	0.11 [0.081]	0.18 [0.133]
BCGF16	0.35 [0.258]	0.35 [0.258]	0.60 [0.443]
BCGF20	0.88 [0.649]	0.88 [0.649]	1.25 [0.922]
BCGF25	1.37 [1.011]	1.21 [0.892]	2.30 [1.696]
BCGF32	3.56 [2.626]	2.99 [2.205]	6.00 [4.426]
BCGF40	6.32 [4.662]	5.30 [3.909]	11.04 [8.143]

● Dimensions of center of guide mm [in.]

Model	Stroke	X	Y
BCG□6	5	31.5 [1.240]	6 [0.236]
	10		
	15	41.5 [1.634]	
	20		
	25	51.5 [2.028]	
	30		
	35	61.5 [2.421]	
	40		
	45	71.5 [2.815]	
	50		
	55	81.5 [3.209]	
	60		
BCG□12	10	32.5 [1.280]	18 [0.709]
	15	42.5 [1.673]	
	20		
	25	52.5 [2.067]	
	30		
	35	62.5 [2.461]	
	40		
	45	72.5 [2.854]	
	50		
	55	82.5 [3.248]	
	60		
BCG□16	5	37.5 [1.476]	9.5 [0.374]
	10		
	15	47.5 [1.870]	
	20		
	25	57.5 [2.264]	
	30		
	35	67.5 [2.657]	
	40		
	45	77.5 [3.051]	
	50		
	55	87.5 [3.445]	
	60		
BCG□20	5	44 [1.732]	11.5 [0.453]
	10		
	15	54 [2.126]	
	20		
	25	64 [2.520]	
	30		
	35	74 [2.913]	
	40		
	45	84 [3.307]	
	50		
	55	94 [3.701]	
	60		

mm [in.]

Model	Stroke	X	Y
BCG□25	5	47.5 [1.870]	14.5 [0.571]
	10		
	15	57.5 [2.264]	
	20		
	25	67.5 [2.657]	
	30		
	35	77.5 [3.051]	
	40		
	45	87.5 [3.445]	
	50		
	55	97.5 [3.839]	
	60		
BCG□32	10	57 [2.244]	18 [0.709]
	15	67 [2.638]	
	20		
	25	77 [3.031]	
	30		
	35	87 [3.425]	
	40		
	45	97 [3.819]	
	50		
	55	107 [4.213]	
	60		
BCG□40	10	70.5 [2.776]	23 [0.906]
	15		
	20		
	25	80.5 [3.169]	
	30		
	35	90.5 [3.563]	
	40		
	45	100.5 [3.957]	
	50		
	55	110.5 [4.350]	
	60		

Displacement of table due to bending moment for cylinder with guide (reference values)

For heat resistant specification graphs, refer to page ⓲.

● Pitching (Mp)

Displacement of edge of table (arrow) when load W is applied at arrow
(Precaution: There may be a large increase in the displacement after a large impact load is applied to the table)

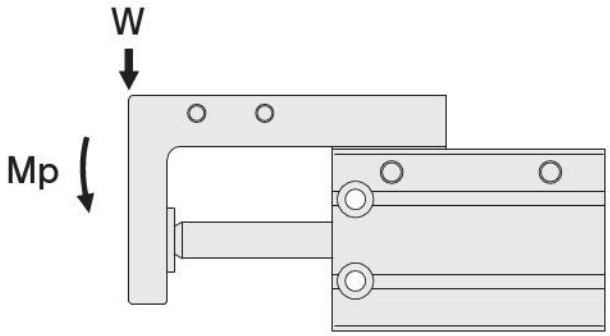

● BCG□8

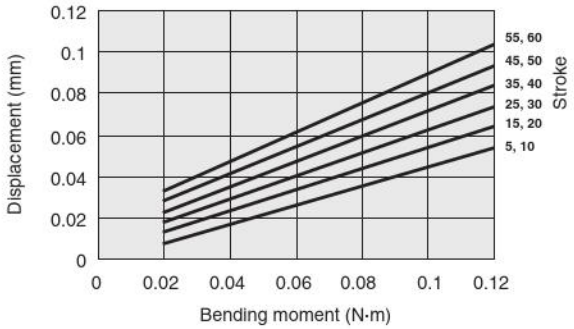

● BCG□12

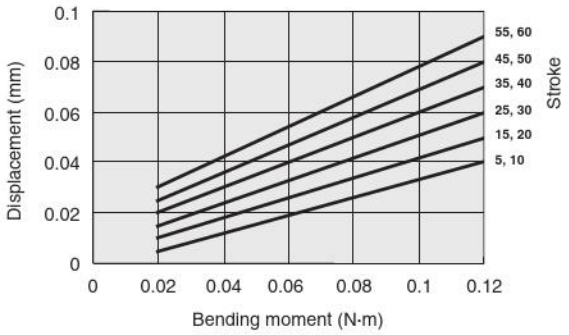

● BCG□16

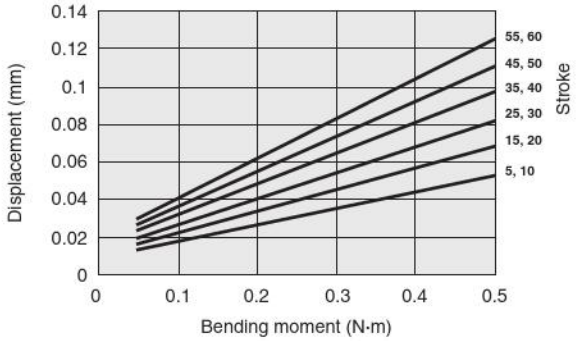

● BCG□20

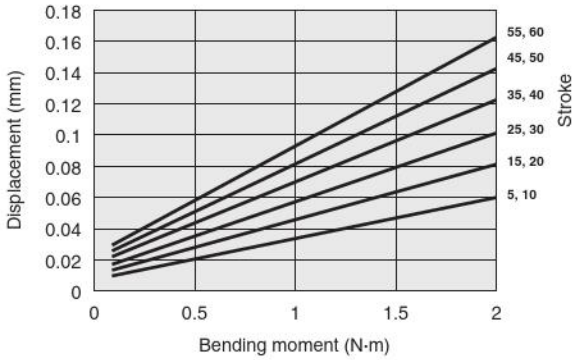

● BCG□25

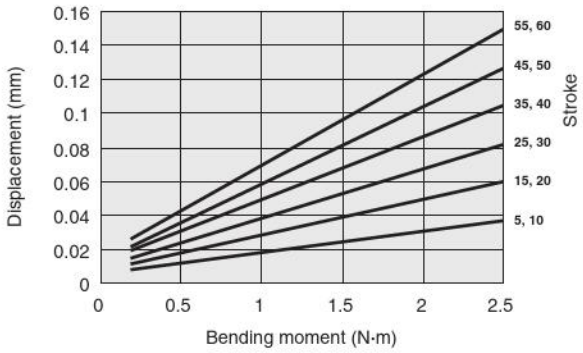

● BCG□32

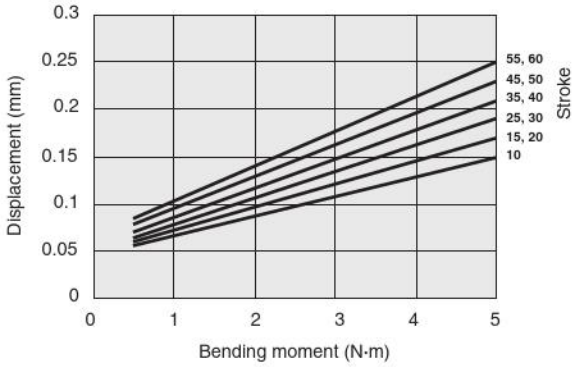

● BCG□40

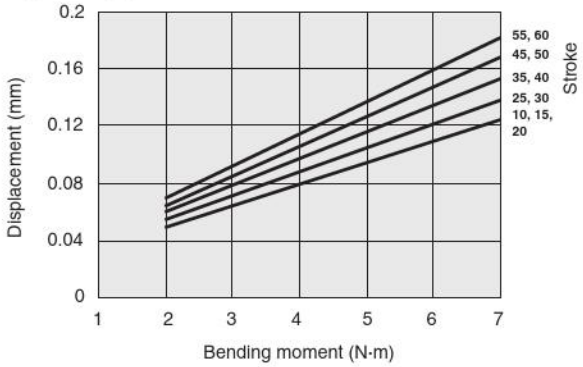

Displacement of table due to bending moment for cylinder with guide (reference values)

For heat resistant specification graphs, refer to page ⑲.

● Yawing (My)

Displacement of edge of table (arrow) when load W is applied at arrow
(Precaution: There may be a large increase in the displacement after a large impact load is applied to the table)

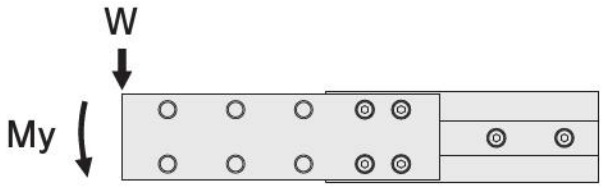

● BCG□8

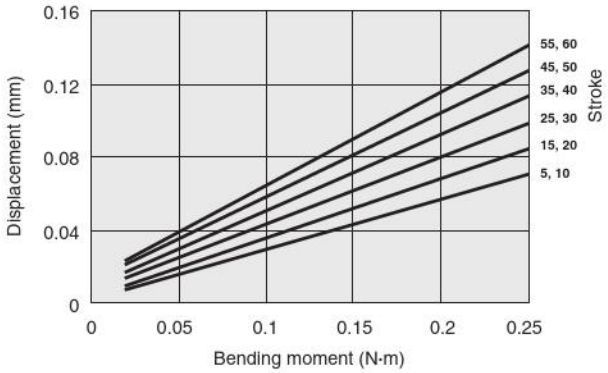

● BCG□12

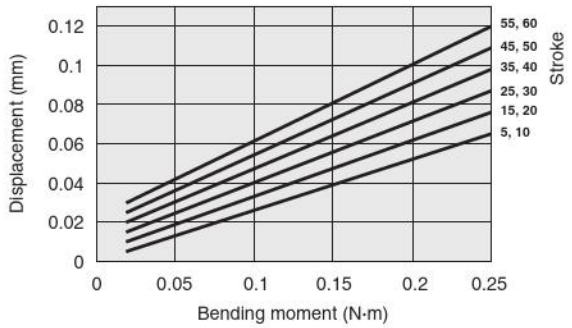

● BCG□16

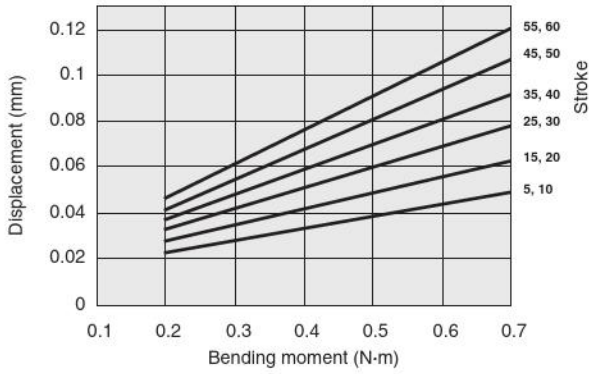

● BCG□20

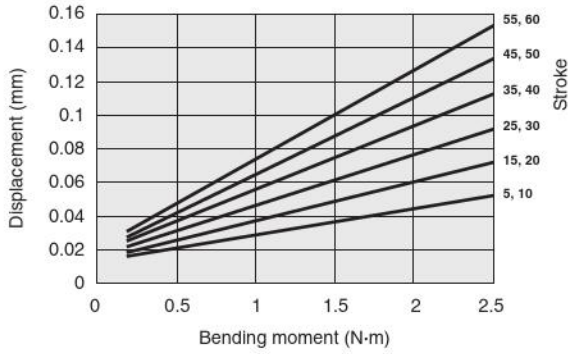

● BCG□25

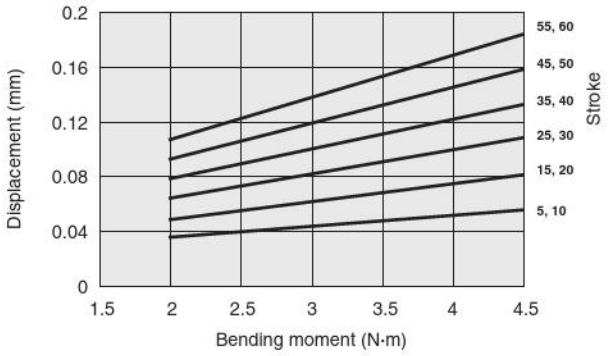

● BCG□32

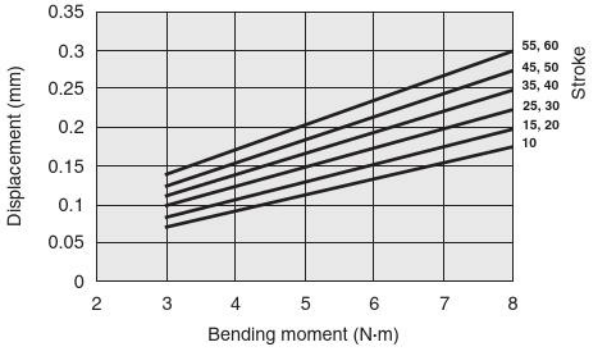

● BCG□40

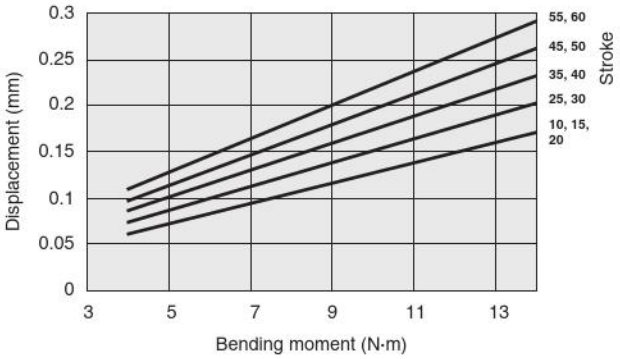

Displacement of table due to bending moment for cylinder with guide (reference values)

For heat resistant specification graphs, refer to page ⑳.

● Rolling (Mr)

Displacement of edge of table (arrow A) when load W is applied at arrow
(Precaution: There may be a large increase in the displacement after a large impact load is applied to the table)

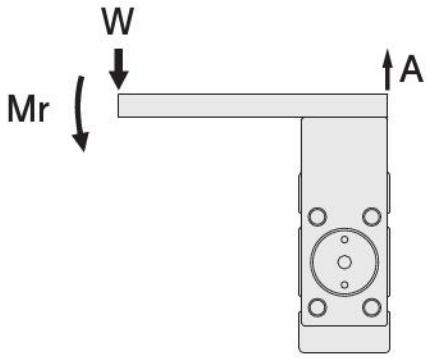

● BCG□8

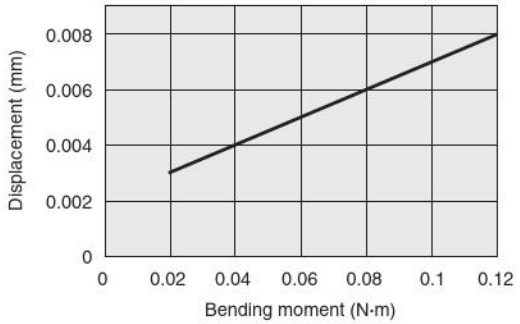

● BCG□12

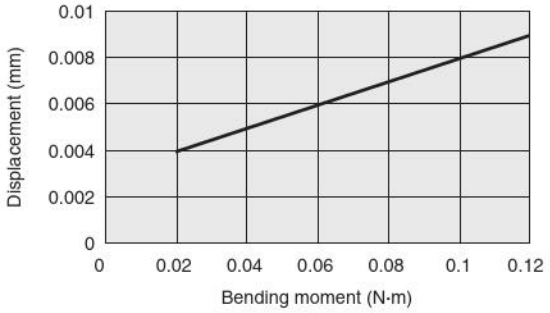

● BCG□16

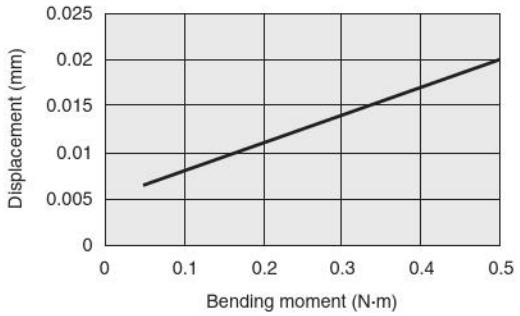

● BCG□20

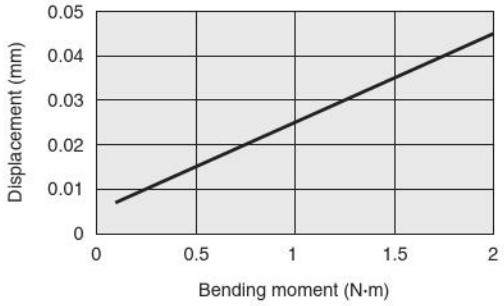

● BCG□25

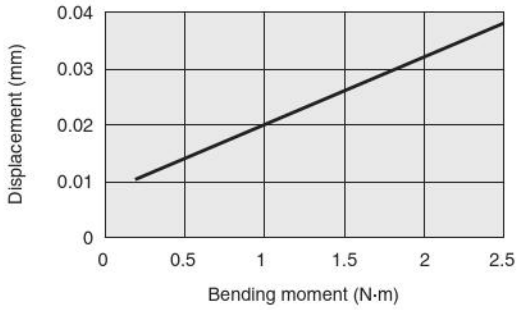

● BCG□32

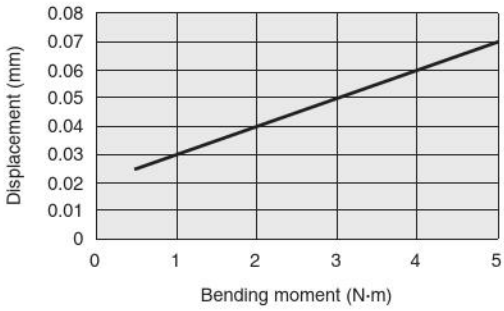

● BCG□40

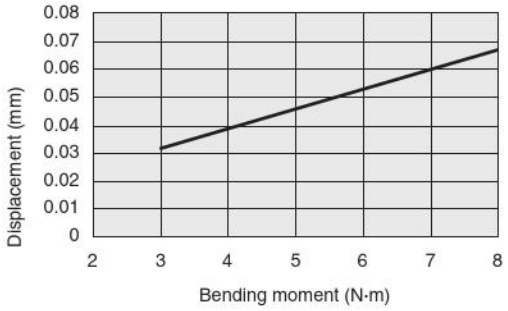

Displacement of table due to bending moment for heat resistant specification cylinder with guide (reference values)

● Pitching (Mp)

Displacement of edge of table (arrow) when load W is applied at arrow
(Precaution: There may be a large increase in the displacement after a large impact load is applied to the table)

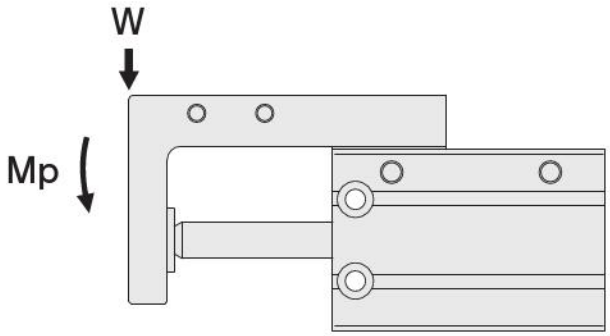

● BCGF8

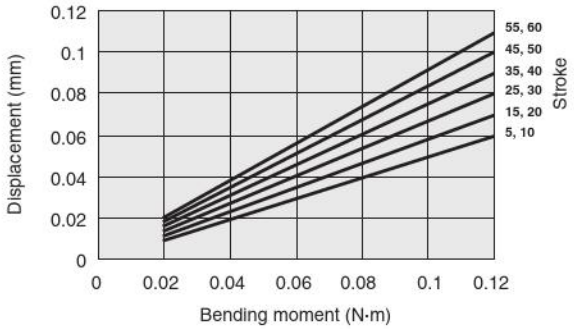

● BCGF12

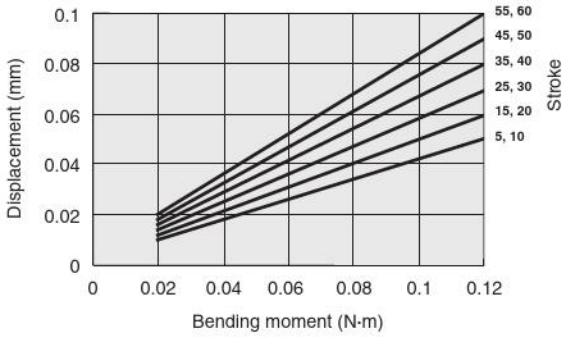

● BCGF16

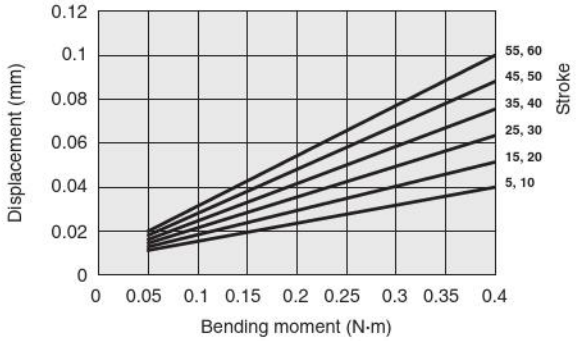

● BCGF20

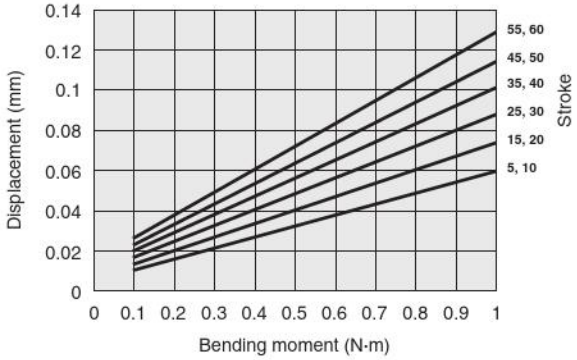

● BCGF25

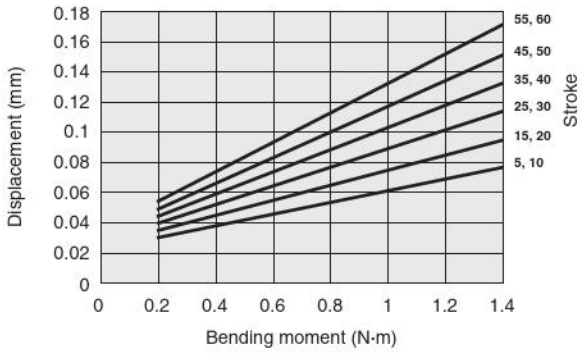

● BCGF32

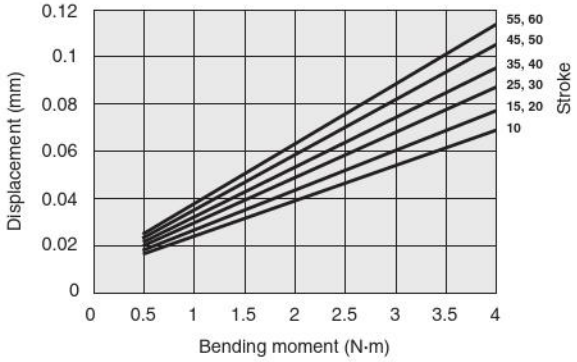

● BCGF40

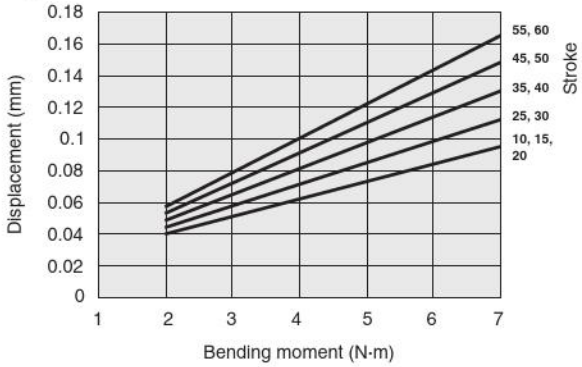

Displacement of table due to bending moment for heat resistant specification cylinder with guide (reference values)

● Yawing (My)

Displacement of edge of table (arrow) when load W is applied at arrow
(Precaution: There may be a large increase in the displacement after a large impact load is applied to the table)

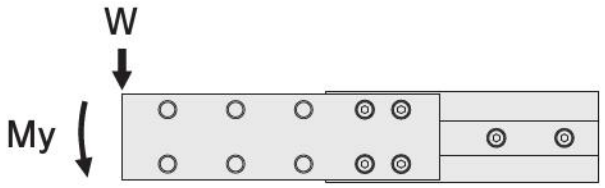

● BCGF8

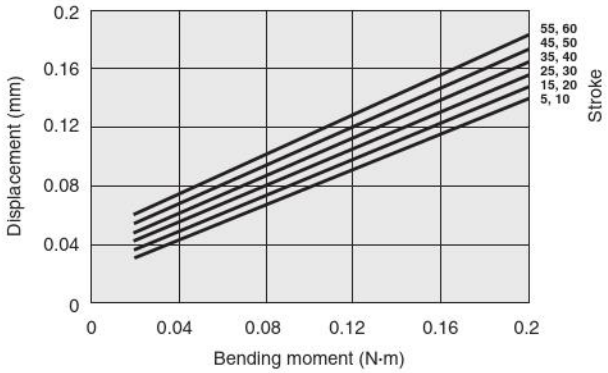

● BCGF12

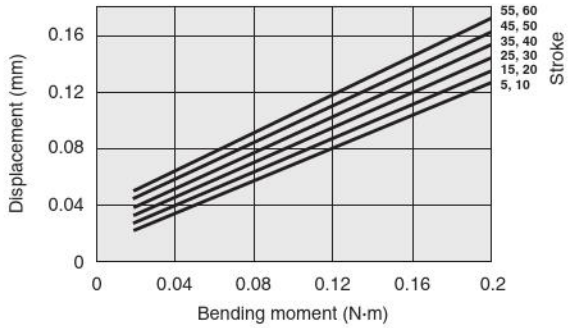

● BCGF16

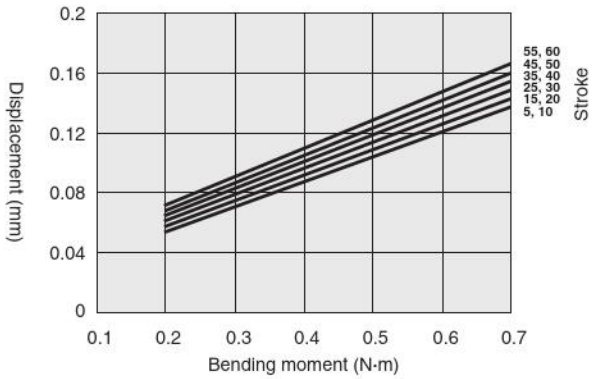

● BCGF20

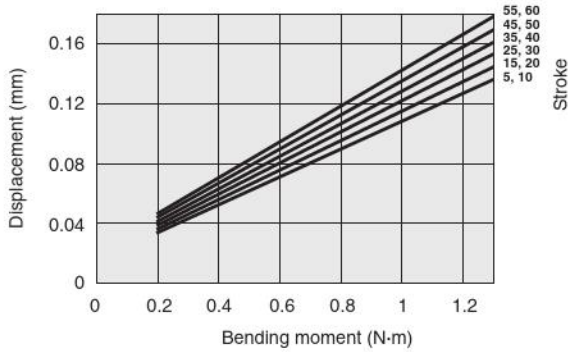

● BCGF25

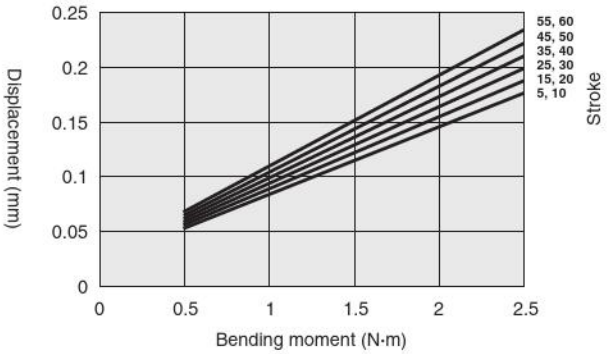

● BCGF32

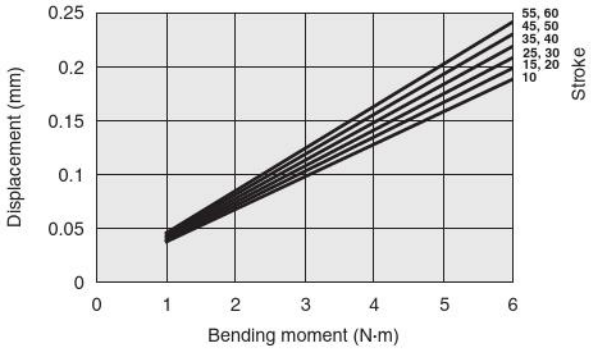

● BCGF40

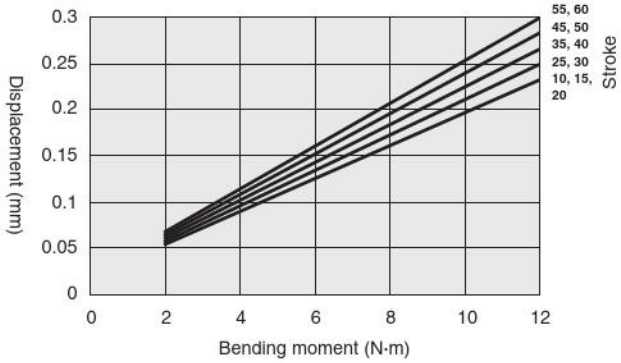

Displacement of table due to bending moment for heat resistant specification cylinder with guide (reference values)

● Rolling (Mr)

Displacement of edge of table (arrow A) when load W is applied at arrow
(Precaution: There may be a large increase in the displacement after a large impact load is applied to the table)

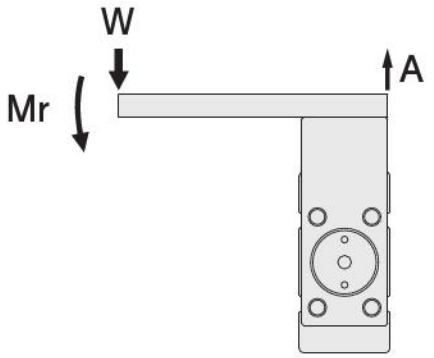

● BCGF8

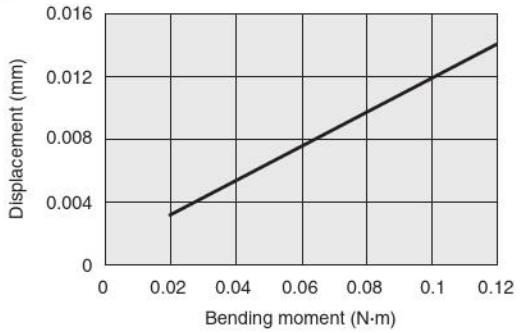

● BCGF12

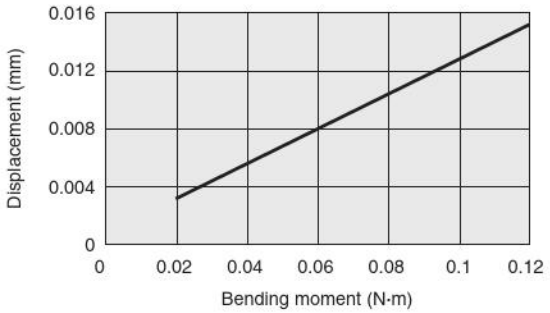

● BCGF16

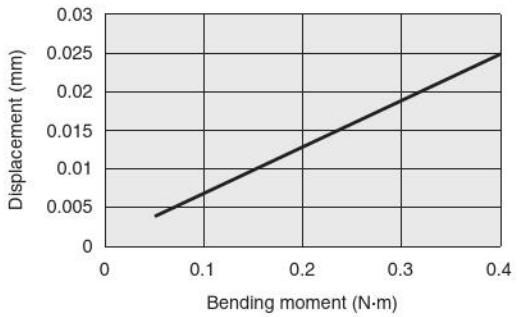

● BCGF20

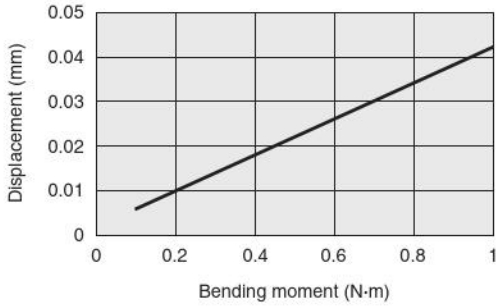

● BCGF25

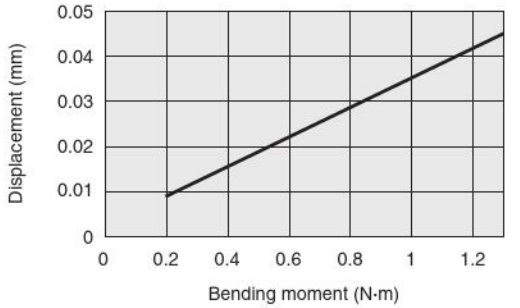

● BCGF32

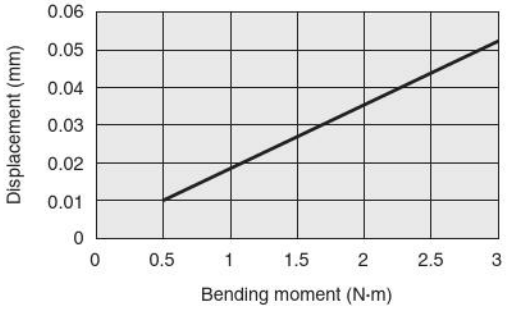

● BCGF40

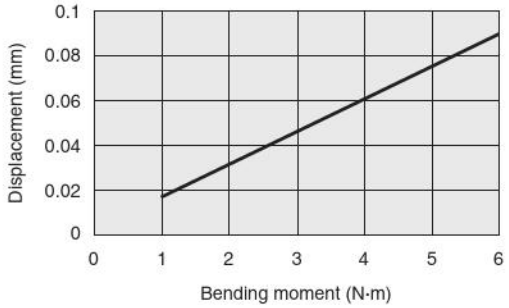

Thrust

● Double acting type

N

Cylinder bore mm	Piston rod diameter mm	Operation	Pressure area mm²	Air pressure MPa						
				0.1	0.2	0.3	0.4	0.5	0.6	0.7
6	4	Push side	28.3	2.8	5.7	8.5	11.3	14.2	17.0	19.8
		Pull side	15.7	1.6	3.1	4.7	6.3	7.9	9.4	11.0
8	5	Push side	50.3	5.0	10.1	15.1	20.1	25.2	30.2	35.2
		Pull side	30.6	3.1	6.1	9.2	12.2	15.3	18.4	21.4
10	5	Push side	78.5	7.9	15.7	23.6	31.4	39.3	47.1	55.0
		Pull side	58.9	5.9	11.8	17.7	23.6	29.5	35.3	41.2
12	6	Push side	113.0	11.3	22.6	33.9	45.2	56.5	67.8	79.1
		Pull side	84.8	8.5	17.0	25.4	33.9	42.4	50.9	59.4
16	8	Push side	201.0	20.1	40.2	60.3	80.4	100.5	120.6	140.7
		Pull side	150.0	15.0	30.0	45.0	60.0	75.0	90.0	105.0
20	10	Push side	314.0	31.4	62.8	94.2	125.6	157.0	188.4	219.8
		Pull side	235.5	23.6	47.1	70.7	94.2	117.8	141.3	164.9
25	12	Push side	490.6	49.1	98.1	147.2	196.2	245.3	294.4	343.4
		Pull side	377.6	37.8	75.5	113.3	151.0	188.8	226.6	264.3
32	16	Push side	803.8	80.4	160.8	241.1	321.5	401.9	482.3	562.7
		Pull side	602.9	60.3	120.6	180.9	241.2	301.5	361.7	422.0
40	16	Push side	1256.0	125.6	251.2	376.8	502.4	628.0	753.6	879.2
		Pull side	1055.0	105.5	211.0	316.5	422.0	527.5	633.0	738.5
50	20	Push side	1962.5	196.3	392.5	588.8	785.0	981.3	1177.5	1373.8
		Pull side	1648.5	164.9	329.7	494.6	659.4	824.3	989.1	1154.0
63	20	Push side	3115.7	311.6	623.1	934.7	1246.3	1557.9	1869.4	2181.0
		Pull side	2801.7	280.2	560.3	840.5	1120.7	1400.9	1681.0	1961.2
80	25	Push side	5024.0	502.4	1004.8	1507.2	2009.6	2512.0	3014.4	3516.8
		Pull side	4533.4	453.3	906.7	1360.0	1813.4	2266.7	2720.0	3173.4
100	30	Push side	7850.0	785.0	1570.0	2355.0	3140.0	3925.0	4710.0	5495.0
		Pull side	7143.5	714.4	1428.7	2143.1	2857.4	3571.8	4286.1	5000.5
125	35	Push side	12265.6	1226.6	2453.1	3679.7	4906.3	6132.8	7359.4	8585.9
		Pull side	11304.0	1130.4	2260.8	3391.2	4521.6	5652.0	6782.4	7912.8

● Single acting type

N

Operating type	Cylinder bore mm	Piston rod diameter mm	Pressure area mm²	Air pressure MPa						Spring return force (END)
				0.2	0.3	0.4	0.5	0.6	0.7	
Push Single acting type	6	4	28.3	2.5	5.3	8.1	11.0	13.8	16.6	3.16
	8	5	50.3	3.6	8.6	13.6	18.7	23.7	28.7	6.5
	10	5	78.5	8.5	16.4	24.2	32.1	39.9	47.8	7.17
	12	6	113.0	12.7	24.0	35.3	46.6	57.9	69.2	9.9
	16	8	201.0	23.8	43.9	64.0	84.1	104.2	124.3	16.4
	20	10	314.0	46.4	77.8	109.2	140.6	172.0	203.4	16.4
	25	12	490.6	77.8	126.9	175.9	225.0	274.1	323.1	20.3
	32	16	803.8	127.8	208.1	288.5	368.9	449.3	529.7	33
	40	16	1256.0	211.7	337.3	462.9	588.5	714.1	839.7	39.5
	50	20	1962.5	338.8	535.1	731.3	927.6	1123.8	1320.1	53.7
Pull Single acting type	6	4	15.7	–	1.3	2.8	4.4	6.0	7.5	3.45
	8	5	30.6	–	2.0	5.1	8.1	11.2	14.3	7.17
	10	5	58.9	4.6	10.5	16.4	22.3	35.3	34.2	7.17
	12	6	84.8	7.1	15.5	24.0	32.5	41.0	49.5	9.9
	16	8	150.0	13.6	28.6	43.6	58.6	73.6	88.6	16.4
	20	10	235.5	30.7	54.3	77.8	101.4	124.9	148.5	16.4
	25	12	377.6	55.2	93.0	130.7	168.5	206.3	244.0	20.3
	32	16	602.9	87.6	147.9	208.2	268.5	328.7	389.0	33
	40	16	1055.0	171.5	277.0	382.5	488.0	593.5	699.0	39.5
	50	20	1648.5	276.0	440.9	605.7	770.6	935.4	1100.3	53.7

Thrust

● Double acting type

lbf

Cylinder bore in.	Piston rod diameter in.	Operation	Pressure area in²	Air pressure psi						
				15	29	44	58	73	87	102
0.236	**0.157**	Push side	0.044	0.629	1.281	1.911	2.540	3.192	3.822	4.451
		Pull side	0.024	0.360	0.697	1.057	1.416	1.776	2.113	2.473
0.315	**0.197**	Push side	0.078	1.124	2.271	3.395	4.519	5.665	6.789	7.913
		Pull side	0.047	0.697	1.371	2.068	2.743	3.440	4.136	4.811
0.394	**0.197**	Push side	0.122	1.776	3.530	5.305	7.059	8.835	10.589	12.364
		Pull side	0.091	1.326	2.653	3.979	5.305	6.632	7.936	9.262
0.472	**0.236**	Push side	0.175	2.540	5.081	7.621	10.161	12.702	15.242	17.782
		Pull side	0.131	1.911	3.822	5.710	7.621	9.532	11.443	13.354
0.630	**0.315**	Push side	0.312	4.519	9.037	13.556	18.075	22.593	27.112	31.631
		Pull side	0.233	3.372	6.744	10.116	13.489	16.861	20.233	23.605
0.787	**0.394**	Push side	0.487	7.059	14.118	21.177	28.236	35.295	42.354	49.413
		Pull side	0.365	5.305	10.589	15.894	21.177	26.482	31.766	37.071
0.984	**0.472**	Push side	0.760	11.038	22.054	33.092	44.108	55.146	66.184	77.199
		Pull side	0.585	8.498	16.973	25.471	33.946	42.444	50.942	59.417
1.260	**0.630**	Push side	1.246	18.075	36.149	54.201	72.276	90.351	108.4	126.5
		Pull side	0.934	13.556	27.112	40.668	54.224	67.780	81.313	94.869
1.575	**0.630**	Push side	1.947	28.236	56.472	84.708	112.9	141.2	169.4	197.7
		Pull side	1.635	23.717	47.435	71.152	94.869	118.6	142.3	166.0
1.969	**0.787**	Push side	3.042	44.130	88.238	132.4	176.5	220.6	264.7	308.8
		Pull side	2.555	37.071	74.120	111.2	148.2	185.3	222.4	259.4
2.480	**0.787**	Push side	4.829	70.050	140.1	210.1	280.2	350.2	420.3	490.3
		Pull side	4.343	62.991	126.0	189.0	251.9	314.9	377.9	440.9
3.150	**0.984**	Push side	7.787	112.9	225.9	338.8	451.8	564.7	677.7	790.6
		Pull side	7.027	101.9	203.8	305.7	407.7	509.6	611.5	713.4
3.937	**1.181**	Push side	12.168	176.5	353.0	529.4	705.9	882.4	1059	1235
		Pull side	11.072	160.6	321.2	481.8	642.4	803.0	963.6	1124
4.921	**1.378**	Push side	19.012	275.8	551.5	827.2	1103	1379	1654	1930
		Pull side	17.521	254.1	508.2	762.4	1016	1271	1525	1779

● Single acting type

lbf

Operating type	Cylinder bore in.	Piston rod diameter in.	Pressure area in²	Air pressure psi						Spring return force (END)
				29	44	58	73	87	102	
Push Single acting type	**0.236**	**0.157**	0.044	0.562	1.191	1.821	2.473	3.102	3.732	0.710
	0.315	**0.197**	0.078	0.809	1.933	3.057	4.204	5.328	6.452	1.461
	0.394	**0.197**	0.122	1.911	3.687	5.440	7.216	8.970	10.746	1.612
	0.472	**0.236**	0.175	2.855	5.395	7.936	10.476	13.016	15.557	2.226
	0.630	**0.315**	0.312	5.350	9.869	14.388	18.906	23.425	27.944	3.687
	0.787	**0.394**	0.487	10.431	17.490	24.549	31.608	38.667	45.726	3.687
	0.984	**0.472**	0.760	17.490	28.528	39.544	50.582	61.620	72.636	4.564
	1.260	**0.630**	1.246	28.731	46.783	64.857	82.932	101.0	119.1	7.419
	1.575	**0.630**	1.947	47.592	75.828	104.1	132.3	160.5	188.8	8.880
	1.969	**0.787**	3.042	76.165	120.3	164.4	208.5	252.6	296.8	12.072
Pull Single acting type	**0.236**	**0.157**	0.024	–	0.292	0.629	0.989	1.349	1.686	0.776
	0.315	**0.197**	0.047	–	0.450	1.147	1.821	2.518	3.215	1.612
	0.394	**0.197**	0.091	1.034	2.360	3.687	5.013	7.936	7.688	1.612
	0.472	**0.236**	0.131	1.596	3.485	5.395	7.306	9.217	11.128	2.226
	0.630	**0.315**	0.233	3.057	6.430	9.802	13.174	16.546	19.918	3.687
	0.787	**0.394**	0.365	6.902	12.207	17.490	22.796	28.079	33.384	3.687
	0.984	**0.472**	0.585	12.409	20.907	29.383	37.880	46.378	54.853	4.564
	1.260	**0.630**	0.934	19.693	33.249	46.805	60.361	73.895	87.451	7.419
	1.575	**0.630**	1.635	38.555	62.272	85.989	109.7	133.4	157.1	8.880
	1.969	**0.787**	2.555	62.047	99.118	136.2	173.2	210.3	247.4	12.072

Basic Cylinders

Double acting type, single acting push type, single acting pull type

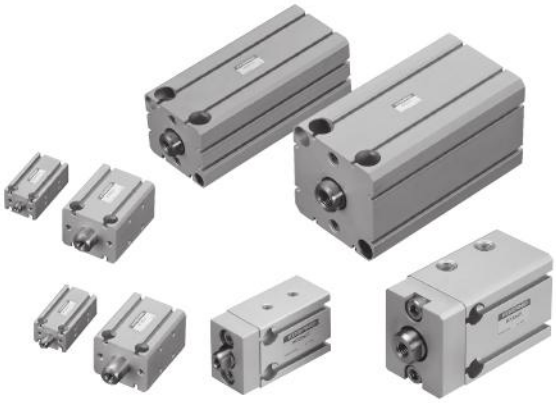

Symbol

● Double acting type

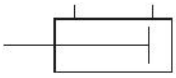

● Single acting push type

● Single acting pull type

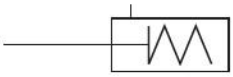

Specifications

● Double acting type (standard, corrosion resistant, heat resistant, scraper specifications <ϕ10 to ϕ125 [0.394 to 4.921]>)

Item \ Cylinder bore		6 [0.236] Note 1	8 [0.315] Note 1	10 [0.394]	12 [0.472]	16 [0.630]	20 [0.787]	25 [0.984]	32 [1.260]	40 [1.575]	50 [1.969]	63 [2.480]	80 [3.150]	100 [3.937]	125 [4.921]
Operating type		Double acting type													
Medium		Air													
Operating pressure range MPa [psi]	Standard, corrosion resistant specifications	0.12 to 0.7 [17 to 102]		0.06 to 0.7 [9 to 102]			0.05 to 0.7 [7 to 102]								
	Heat resistant specification	0.2 to 0.7 [29 to 102]		0.1 to 0.7 [15 to 102]											
	Scraper specification	–		0.1 to 0.7 [15 to 102]											
Proof pressure MPa [psi]		1.05 [152]													
Operating temperature range °C [°F]		0 to 60 [32 to 140] (For heat resistant specification, 0 to 150 [32 to 302] Note 2)													
Operating speed range mm/s [in/sec]	Standard, corrosion resistant specifications	10 to 500 [0.394 to 19.685]										10 to 300 [0.394 to 11.811]			
	Heat resistant specification	100 to 300 [3.937 to 11.811]													
	Scraper specification	–		100 to 300 [3.937 to 11.811]											
Cushion		Rubber bumper													
Lubrication		Not required (if lubricated, use turbine oil class 1 (ISO VG32) or equivalent)													
Port size		M3×0.5			M5×0.8				Rc1/8			Rc1/4		Rc3/8	

Note 1: Scraper specification not available for cylinder bores ϕ6 [0.236] and ϕ8 [0.315].
2: Heat resistant specification is without sensor switch.

● Single acting type (standard, corrosion resistant specifications)

Item \ Cylinder bore		6 [0.236]	8 [0.315]	10 [0.394]	12 [0.472]	16 [0.630]	20 [0.787]	25 [0.984]	32 [1.260]	40 [1.575]	50 [1.969]
Operating type		Single acting push and pull type									
Medium		Air									
Operating pressure range MPa [psi]	Single acting push type	0.2 to 0.7 [29 to 102]		0.15 to 0.7 [22 to 102]							
	Single actingpull type	0.3 to 0.7 [44 to 102]		0.2 to 0.7 [29 to 102]			0.15 to 0.7 [22 to 102]				
Proof pressure MPa [psi]		1.05 [152]									
Operating temperature range °C [°F]		0 to 60 [32 to 140]									
Operating speed range mm/s [in/sec]		50 to 500 [1.969 to 19.685]									
Cushion		Rubber bumper									
Lubrication		Not required (if lubricated, use turbine oil class 1 (ISO VG32) or equivalent)									
Port size		M3×0.5			M5×0.8				Rc1/8		

Cylinder bore and stroke

● Double acting type

Cylinder bore	Standard stroke	Maximum available stroke
6 [0.236] Note 1, 8 [0.315] Note 1, 10 [0.394]	5, 10, 15, 20, 25, 30	50
12 [0.472], 16 [0.630]	5, 10, 15, 20, 25, 30, 35, 40, 45, 50	100
20 [0.787], 25 [0.984]	5 Note 2, 10, 15, 20, 25, 30, 35, 40, 45, 50, 55, 60, 70, 75, 80, 90, 100	125
32 [1.260], 40 [1.575]	10, 15, 20, 25, 30, 35, 40, 45, 50, 55, 60, 70, 75, 80, 90, 100	200
50 [1.969], 63 [2.480], 80 [3.150], 100 [3.937], 125 [4.921]	10, 15, 20, 25, 30, 35, 40, 45, 50, 55, 60, 70, 75, 80, 90, 100	200

Note 1: Scraper specification not available for cylinder bores ϕ6 [0.236] and ϕ8 [0.315].
2: This stroke is available with collar insertion.

● Single acting type

Cylinder bore	Standard stroke
6 [0.236], 8 [0.315], 10 [0.394]	5, 10, 15
12 [0.472], 16 [0.630], 20 [0.787], 25 [0.984]	5, 10, 15, 20, 25, 30
32 [1.260], 40 [1.575], 50 [1.969]	10, 15, 20, 25, 30

Order Codes

● Standard specifications

BC [ ] [×] - [ ] - [ ] - [ ] [ ] [ ]

Basic Cylinders

Operating type
Blank: Double acting type
SA : Single acting push type
TA : Single acting pull type

Cylinder bore
×
Stroke
● See page 23 for cylinder bores and strokes.

Piston rod end shape
Blank: Female thread
B : Male thread

Bracket
Blank: No bracket
BK : With bracket Note 1

Sensor switch model
Blank : No sensor switch
ZE135 : 2-lead wires, solid state type, horizontal lead wires
ZE155 : 3-lead wires, solid state NPN output type, horizontal lead wires
ZE175 : 3-lead wires, solid state PNP output type, horizontal lead wires
ZE235 : 2-lead wires, solid state type, vertical lead wires
ZE255 : 3-lead wires, solid state NPN output type, vertical lead wires
ZE275 : 3-lead wires, solid state PNP output type, vertical lead wires
ZE137 : 2-lead wires, 2-color LED solid state type, horizontal lead wires
ZE157 : 3-lead wires, 2-color LED solid state NPN output type, horizontal lead wires
ZE177 : 3-lead wires, 2-color LED solid state PNP output type, horizontal lead wires
ZE237 : 2-lead wires, 2-color LED solid state type, vertical lead wires
ZE257 : 3-lead wires, 2-color LED solid state NPN output type, vertical lead wires
ZE277 : 3-lead wires, 2-color LED solid state PNP output type, vertical lead wires
ZE101 : 2-lead wires, reed switch type without indicator, horizontal lead wires Note 2
ZE102 : 2-lead wires, reed switch type, horizontal lead wires Note 2
ZE201 : 2-lead wires, reed switch type without indicator, vertical lead wires Note 2
ZE202 : 2-lead wires, reed switch type, vertical lead wires Note 2
● For details on sensor switches, see page 94.

Lead wire length
A: 1000 mm [39.370 in.]
B: 3000 mm [118.1 in.]
G: 300 mm [11.811 in.] with M8 connector, only on the **ZE175**, **ZE177**, **ZE275**, **ZE277**

Number of sensor switches
1: 1 sensor switch
2: 2 sensor switches
3: 3 sensor switches
⋮

Note 1: Brackets cannot be attached to cylinders that have ϕ6 [0.236] and ϕ8 [0.315] cylinder bores.
2: Reed type sensor switches cannot be attached to cylinders that have ϕ6 [0.236], ϕ8 [0.315], ϕ10 [0.394], or ϕ12 [0.472] cylinder bores.
3: When using reed switch type sensor switches, operates at cylinder speed of 30 mm/s [1.181 in/sec] or higher.

● Corrosion resistant specification (Change of material of piston rod, etc.)

BC [ ] **R** [×] - [ ] - [ ] - [ ] [ ] [ ]

Basic Cylinders

Operating type
Blank: Double acting type
SA : Single acting push type
TA : Single acting pull type

R: **Corrosion resistant specification**

Cylinder bore
×
Stroke
● See page 23 for cylinder bores and strokes.

Piston rod end shape
Blank: Female thread
B : Male thread

Bracket
Blank: No bracket
BK : With bracket Note 1

Sensor switch model
Blank : No sensor switch
ZE135 : 2-lead wires, solid state type, horizontal lead wires
ZE155 : 3-lead wires, solid state NPN output type, horizontal lead wires
ZE175 : 3-lead wires, solid state PNP output type, horizontal lead wires
ZE235 : 2-lead wires, solid state type, vertical lead wires
ZE255 : 3-lead wires, solid state NPN output type, vertical lead wires
ZE275 : 3-lead wires, solid state PNP output type, vertical lead wires
ZE137 : 2-lead wires, 2-color LED solid state type, horizontal lead wires
ZE157 : 3-lead wires, 2-color LED solid state NPN output type, horizontal lead wires
ZE177 : 3-lead wires, 2-color LED solid state PNP output type, horizontal lead wires
ZE237 : 2-lead wires, 2-color LED solid state type, vertical lead wires
ZE257 : 3-lead wires, 2-color LED solid state NPN output type, vertical lead wires
ZE277 : 3-lead wires, 2-color LED solid state PNP output type, vertical lead wires
ZE101 : 2-lead wires, reed switch type without indicator, horizontal lead wires Note 2
ZE102 : 2-lead wires, reed switch type, horizontal lead wires Note 2
ZE201 : 2-lead wires, reed switch type without indicator, vertical lead wires Note 2
ZE202 : 2-lead wires, reed switch type, vertical lead wires Note 2
● For details on sensor switches, see page 94.

Lead wire length
A: 1000 mm [39.370 in.]
B: 3000 mm [118.1 in.]
G: 300 mm [11.811 in.] with M8 connector, only on the **ZE175**, **ZE177**, **ZE275**, **ZE277**

Number of sensor switches
1: 1 sensor switch
2: 2 sensor switches
3: 3 sensor switches
⋮

Note 1: Brackets cannot be attached to cylinders that have ϕ6 [0.236] and ϕ8 [0.315] cylinder bores.
2: Reed type sensor switches cannot be attached to cylinders that have ϕ6 [0.236], ϕ8 [0.315], ϕ10 [0.394], or ϕ12 [0.472] cylinder bores.
3: When using reed switch type sensor switches, operates at cylinder speed of 30 mm/s [1.181 in/sec] or higher.

● Heat resistant specification (Single acting type not available. Sensor switch cannot be attached.)

BC F × - - -

Piston rod end shape
Blank: Female thread
B : Male thread

Bracket
Blank: No bracket
BK : With bracket Note

Note: Brackets cannot be attached to cylinders that have ϕ6 [0.236] and ϕ8 [0.315] cylinder bores.

Cylinder bore
×
Stroke

● See page 23 for cylinder bores and strokes.

F: Heat resistant specification (double acting type)

Basic Cylinders

● Scraper specification (Single acting type not available. Cylinder bores ϕ6 [0.236] and ϕ8 [0.315] not available.)

BC Y × - - - - - -

Piston rod end shape
Blank: Female thread
B : Male thread

Bracket
Blank: No bracket
BK : With bracket

Lead wire length
A: 1000 mm [39.370 in.]
B: 3000 mm [118.1 in.]
G: 300 mm [11.811 in.] with M8 connector, only on the **ZE175**, **ZE177**, **ZE275**, **ZE277**

Number of sensor switches
1: 1 sensor switch
2: 2 sensor switches
3: 3 sensor switches
⋮

Cylinder bore
×
Stroke

● See page 23 for cylinder bores and strokes.
<Cylinder bore ϕ10 to ϕ125 [0.394 to 4.921]>
Note: Cylinder bores ϕ6 [0.236] and ϕ8 [0.315] not available.

Y: Scraper specification (double acting type)

Basic Cylinders

Sensor switch model
Blank : No sensor switch
ZE135 : 2-lead wires, solid state type, horizontal lead wires
ZE155 : 3-lead wires, solid state NPN output type, horizontal lead wires
ZE175 : 3-lead wires, solid state PNP output type, horizontal lead wires
ZE235 : 2-lead wires, solid state type, vertical lead wires
ZE255 : 3-lead wires, solid state NPN output type, vertical lead wires
ZE275 : 3-lead wires, solid state PNP output type, vertical lead wires
ZE137 : 2-lead wires, 2-color LED solid state type, horizontal lead wires
ZE157 : 3-lead wires, 2-color LED solid state NPN output type, horizontal lead wires
ZE177 : 3-lead wires, 2-color LED solid state PNP output type, horizontal lead wires
ZE237 : 2-lead wires, 2-color LED solid state type, vertical lead wires
ZE257 : 3-lead wires, 2-color LED solid state NPN output type, vertical lead wires
ZE277 : 3-lead wires, 2-color LED solid state PNP output type, vertical lead wires
ZE101 : 2-lead wires, reed switch type without indicator, horizontal lead wires Note 1
ZE102 : 2-lead wires, reed switch type, horizontal lead wires Note 1
ZE201 : 2-lead wires, reed switch type without indicator, vertical lead wires Note 1
ZE202 : 2-lead wires, reed switch type, vertical lead wires Note 1

● For details on sensor switches, see page 94.

Note 1: Reed type sensor switches cannot be attached to cylinders that have ϕ10 [0.394] and ϕ12 [0.472] cylinder bores.
2: When using reed switch type sensor switches, operates at cylinder speed of 30 mm/s [1.181 in/sec] or higher.

Mass

● Double acting type (standard, corrosion resistant, heat resistant specifications)

g

Model	Stroke																
	5	10	15	20	25	30	35	40	45	50	55	60	70	75	80	90	100
BC6	13 (15)	16 (18)	20 (22)	23 (25)	27 (29)	30 (32)	–	–	–	–	–	–	–	–	–	–	–
BC8	19 (21)	21 (23)	24 (26)	27 (29)	31 (32)	32 (34)	–	–	–	–	–	–	–	–	–	–	–
BC10	21 (23)	23 (25)	26 (28)	29 (31)	32 (34)	34 (36)	–	–	–	–	–	–	–	–	–	–	–
BC12	29 (32)	33 (36)	38 (41)	42 (45)	46 (49)	50 (53)	55 (58)	59 (62)	63 (66)	67 (70)	–	–	–	–	–	–	–
BC16	44 (49)	49 (54)	55 (60)	61 (66)	67 (72)	72 (77)	78 (83)	84 (89)	90 (95)	95 (100)	–	–	–	–	–	–	–
BC20	86 (96)	84 (94)	93 (103)	102 (112)	111 (121)	120 (130)	129 (139)	137 (147)	146 (156)	155 (165)	164 (174)	173 (183)	190 (200)	199 (209)	208 (218)	226 (236)	243 (253)
BC25	126 (142)	122 (138)	134 (150)	146 (162)	159 (175)	171 (187)	183 (199)	195 (211)	207 (223)	219 (235)	231 (247)	243 (259)	267 (283)	280 (296)	292 (308)	316 (332)	340 (356)
BC32	–	222 (262)	242 (282)	262 (302)	283 (323)	303 (343)	323 (363)	343 (383)	363 (403)	383 (423)	403 (443)	423 (463)	464 (504)	484 (524)	504 (544)	544 (584)	584 (624)
BC40	–	316 (356)	339 (379)	362 (402)	386 (426)	409 (449)	433 (473)	456 (496)	479 (519)	502 (542)	526 (566)	549 (589)	596 (636)	619 (659)	642 (682)	689 (729)	735 (775)
BC50	–	545 (640)	580 (675)	614 (709)	649 (744)	683 (778)	718 (813)	752 (847)	786 (881)	820 (915)	855 (950)	889 (984)	958 (1053)	993 (1088)	1027 (1122)	1096 (1191)	1164 (1259)
BC63	–	832 (927)	872 (967)	912 (1007)	952 (1047)	991 (1086)	1031 (1126)	1071 (1166)	1111 (1206)	1150 (1245)	1190 (1285)	1230 (1325)	1310 (1405)	1350 (1445)	1389 (1484)	1469 (1564)	1548 (1643)
BC80	–	1254 (1434)	1306 (1486)	1358 (1538)	1410 (1590)	1462 (1642)	1514 (1694)	1566 (1746)	1618 (1798)	1670 (1850)	1723 (1903)	1775 (1955)	1879 (2059)	1931 (2111)	1983 (2163)	2087 (2267)	2191 (2371)
BC100	–	2448 (2748)	2532 (2832)	2615 (2915)	2699 (2999)	2782 (3082)	2866 (3166)	2949 (3249)	3033 (3333)	3116 (3416)	3200 (3500)	3284 (3584)	3451 (3751)	3535 (3835)	3618 (3918)	3785 (4085)	3952 (4252)
BC125	–	4591 (5132)	4675 (5216)	4758 (5299)	4842 (5383)	4925 (5466)	5009 (5550)	5092 (5633)	5176 (5717)	5259 (5800)	5343 (5884)	5427 (5968)	5594 (6135)	5678 (6219)	5761 (6302)	5928 (6469)	6095 (6636)

Values in ( ) parentheses are masses for male thread specifications

● Double acting type (scraper specification)

g

Model	Stroke																
	5	10	15	20	25	30	35	40	45	50	55	60	70	75	80	90	100
BCY10	29 (31)	31 (33)	34 (36)	37 (39)	40 (42)	42 (44)	–	–	–	–	–	–	–	–	–	–	–
BCY12	43 (46)	47 (50)	52 (55)	56 (59)	60 (63)	64 (67)	69 (72)	73 (76)	77 (80)	81 (84)	–	–	–	–	–	–	–
BCY16	61 (66)	66 (71)	72 (77)	78 (83)	84 (89)	89 (94)	95 (100)	101 (106)	107 (112)	112 (117)	–	–	–	–	–	–	–
BCY20	111 (121)	109 (119)	118 (128)	127 (137)	136 (146)	145 (155)	154 (164)	162 (172)	171 (181)	180 (190)	189 (199)	198 (208)	215 (225)	224 (234)	233 (243)	251 (261)	268 (278)
BCY25	162 (178)	158 (174)	170 (186)	182 (198)	195 (211)	207 (223)	219 (235)	231 (247)	243 (259)	255 (271)	267 (283)	279 (295)	303 (319)	316 (332)	328 (344)	352 (368)	376 (392)
BCY32	–	306 (346)	326 (366)	346 (386)	367 (407)	387 (427)	407 (447)	427 (467)	447 (487)	467 (507)	487 (527)	507 (547)	548 (588)	568 (608)	588 (628)	628 (668)	668 (708)
BCY40	–	437 (477)	460 (500)	483 (523)	507 (547)	530 (570)	554 (594)	577 (617)	600 (640)	623 (663)	647 (687)	670 (710)	717 (757)	740 (780)	763 (803)	810 (850)	856 (896)
BCY50	–	740 (835)	775 (870)	809 (904)	844 (939)	878 (973)	913 (1008)	947 (1042)	981 (1076)	1015 (1110)	1050 (1145)	1084 (1179)	1153 (1248)	1188 (1283)	1222 (1317)	1291 (1386)	1359 (1454)
BCY63	–	1174 (1269)	1214 (1309)	1254 (1349)	1294 (1389)	1333 (1428)	1373 (1468)	1413 (1508)	1453 (1548)	1492 (1587)	1532 (1627)	1572 (1667)	1652 (1747)	1692 (1787)	1731 (1826)	1811 (1906)	1890 (1985)
BCY80	–	1724 (1904)	1776 (2246)	1828 (2008)	1880 (2060)	1932 (2112)	1984 (2164)	2036 (2216)	2088 (2268)	2140 (2320)	2193 (2373)	2245 (2425)	2349 (2529)	2401 (2581)	2453 (2633)	2557 (2737)	2661 (2841)
BCY100	–	3552 (3852)	3636 (4136)	3719 (4219)	3803 (4303)	3886 (4386)	3970 (4470)	4053 (4553)	4137 (4637)	4220 (4520)	4304 (4804)	4388 (4888)	4555 (5055)	4639 (5139)	4722 (5222)	4889 (5389)	5056 (5556)
BCY125	–	5272 (5813)	5356 (5897)	5439 (5980)	5523 (6064)	5606 (6147)	5690 (6231)	5773 (6314)	5857 (6398)	5940 (6481)	6024 (6565)	6108 (6649)	6275 (6816)	6359 (6900)	6442 (6983)	6609 (7150)	6776 (7317)

Values in ( ) parentheses are masses for male thread specifications

● Single acting push type (standard, corrosion resistant specifications)

g

Model	Stroke					
	5	10	15	20	25	30
BCSA6	22 (24)	25 (27)	28 (30)	–	–	–
BCSA8	30 (32)	33 (35)	36 (38)	–	–	–
BCSA10	34 (36)	37 (39)	40 (42)	–	–	–
BCSA12	49 (52)	53 (56)	57 (60)	61 (64)	65 (68)	69 (72)
BCSA16	73 (78)	79 (84)	85 (90)	91 (96)	97 (102)	103 (108)
BCSA20	110 (120)	119 (129)	128 (138)	137 (147)	146 (156)	155 (165)
BCSA25	160 (176)	173 (189)	186 (202)	199 (215)	212 (228)	225 (241)
BCSA32	–	289 (329)	318 (358)	347 (387)	376 (416)	405 (445)
BCSA40	–	426 (466)	458 (498)	490 (530)	522 (562)	554 (594)
BCSA50	–	750 (845)	786 (881)	822 (917)	858 (953)	894 (989)

Values in ( ) parentheses are masses for male thread specifications

● Single acting pull type (standard, corrosion resistant specifications)

g

Model	Stroke					
	5	10	15	20	25	30
BCTA6	20 (22)	23 (25)	26 (28)	–	–	–
BCTA8	26 (28)	29 (31)	32 (34)	–	–	–
BCTA10	29 (31)	32 (34)	35 (37)	–	–	–
BCTA12	43 (46)	47 (50)	51 (54)	55 (58)	59 (62)	63 (66)
BCTA16	63 (68)	69 (74)	75 (80)	81 (86)	87 (92)	93 (98)
BCTA20	98 (108)	107 (117)	116 (126)	125 (135)	134 (144)	143 (153)
BCTA25	144 (160)	157 (173)	170 (186)	183 (199)	196 (212)	209 (225)
BCTA32	–	260 (300)	281 (321)	302 (342)	323 (363)	344 (384)
BCTA40	–	404 (444)	428 (468)	452 (492)	476 (516)	500 (540)
BCTA50	–	720 (815)	756 (851)	792 (887)	828 (923)	864 (959)

Values in ( ) parentheses are masses for male thread specifications

● Additional mass of sensor switches

ZE□□□A, ZE□□□G: 15g **ZE□□□B**: 35g

Mass

● Double acting type (standard, corrosion resistant, heat resistant specifications)

oz

Model	Stroke																
	5	10	15	20	25	30	35	40	45	50	55	60	70	75	80	90	100
BC6	0.46(0.53)	0.56 (0.63)	0.71 (0.78)	0.81 (0.88)	0.95 (1.02)	1.06 (1.13)	–	–	–	–	–	–	–	–	–	–	–
BC8	0.67 (0.74)	0.74 (0.81)	0.85 (0.92)	0.95 (1.02)	1.09 (1.13)	1.13 (1.20)	–	–	–	–	–	–	–	–	–	–	–
BC10	0.74 (0.81)	0.81 (0.88)	0.92 (0.99)	1.02 (1.09)	1.13 (1.20)	1.20 (1.27)	–	–	–	–	–	–	–	–	–	–	–
BC12	1.02 (1.13)	1.16 (1.27)	1.34 (1.45)	1.48 (1.59)	1.62 (1.73)	1.76 (1.87)	1.94 (2.05)	2.08 (2.19)	2.22 (2.33)	2.36 (2.47)	–	–	–	–	–	–	–
BC16	1.55 (1.73)	1.73 (1.90)	1.94 (2.12)	2.15 (2.33)	2.36 (2.54)	2.54 (2.72)	2.75 (2.93)	2.96 (3.14)	3.17 (3.35)	3.35 (3.53)	–	–	–	–	–	–	–
BC20	3.03 (3.39)	2.96 (3.32)	3.28 (3.63)	3.60 (3.95)	3.92 (4.27)	4.23 (4.59)	4.55 (4.90)	4.83 (5.19)	5.15 (5.50)	5.47 (5.82)	5.78 (6.14)	6.10 (6.46)	6.70 (7.05)	7.02 (7.37)	7.34 (7.69)	7.97 (8.32)	8.57 (8.92)
BC25	4.44 (5.01)	4.30 (4.87)	4.73 (5.29)	5.15 (5.71)	5.61 (6.17)	6.03 (6.60)	6.46 (7.02)	6.88 (7.44)	7.30 (7.87)	7.72 (8.29)	8.15 (8.71)	8.57 (9.14)	9.42 (9.98)	9.88 (10.44)	10.30 (10.86)	11.15 (11.71)	11.99 (12.56)
BC32	–	7.83 (9.24)	8.54 (9.95)	9.24 (10.65)	9.98 (11.39)	10.69 (12.10)	11.39 (12.80)	12.10 (13.51)	12.80 (14.22)	13.51 (14.92)	14.22 (15.63)	14.92 (16.33)	16.37 (17.78)	17.07 (18.48)	17.78 (19.19)	19.19 (20.60)	20.60 (22.01)
BC40	–	11.15 (12.56)	11.96 (13.37)	12.77 (14.18)	13.62 (15.03)	14.43 (15.84)	15.27 (16.68)	16.08 (17.50)	16.90 (18.31)	17.71 (19.12)	18.55 (19.96)	19.37 (20.78)	21.02 (22.43)	21.83 (23.25)	22.65 (24.06)	24.30 (25.71)	25.93 (27.34)
BC50	–	19.22 (22.57)	20.46 (23.81)	21.66 (25.01)	22.89 (26.24)	24.09 (27.44)	25.33 (28.68)	26.53 (29.88)	27.72 (31.08)	28.92 (32.28)	30.16 (33.51)	31.36 (34.71)	33.79 (37.14)	35.03 (38.38)	36.23 (39.58)	38.66 (42.01)	41.06 (44.41)
BC63	–	29.35 (32.70)	30.76 (34.11)	32.17 (35.52)	33.58 (36.93)	34.96 (38.31)	36.37 (39.72)	37.78 (41.13)	39.19 (42.54)	40.56 (43.92)	41.98 (45.33)	43.39 (46.74)	46.21 (49.56)	47.62 (50.97)	48.99 (52.35)	51.82 (55.17)	54.60 (57.95)
BC80	–	44.23 (50.58)	46.07 (52.42)	47.90 (54.25)	49.74 (56.08)	51.57 (57.92)	53.40 (59.75)	55.24 (61.59)	57.07 (63.42)	58.91 (65.26)	60.78 (67.13)	62.61 (68.96)	66.28 (72.63)	68.11 (74.46)	69.95 (76.30)	73.62 (79.96)	77.28 (83.63)
BC100	–	86.35 (96.93)	89.31 (99.89)	92.24 (102.82)	95.20 (105.78)	98.13 (108.71)	101.09 (111.68)	104.02 (114.60)	106.98 (117.57)	109.91 (120.49)	112.87 (123.46)	115.84 (126.42)	121.73 (132.31)	124.69 (135.27)	127.62 (138.20)	133.51 (144.09)	139.40 (149.98)
BC125	–	161.94 (181.02)	164.90 (183.99)	167.83 (186.91)	170.79 (189.88)	173.72 (192.80)	176.68 (195.77)	179.61 (198.69)	182.57 (201.66)	185.50 (204.59)	188.47 (207.55)	191.43 (210.51)	197.32 (216.40)	200.28 (219.37)	203.21 (222.29)	209.10 (228.18)	214.99 (234.07)

Values in ( ) parentheses are masses for male thread specifications

● Double acting type (scraper specification)

oz

Model	Stroke																
	5	10	15	20	25	30	35	40	45	50	55	60	70	75	80	90	100
BCY10	1.02(1.09)	1.09 (1.16)	1.20 (1.27)	1.31 (1.38)	1.41 (1.48)	1.48 (1.55)	–	–	–	–	–	–	–	–	–	–	–
BCY12	1.52 (1.62)	1.66 (1.76)	1.83 (1.94)	1.98 (2.08)	2.12 (2.22)	2.26 (2.36)	2.43 (2.54)	2.57 (2.68)	2.72 (2.82)	2.86 (2.96)	–	–	–	–	–	–	–
BCY16	2.15 (2.33)	2.33 (2.50)	2.54 (2.72)	2.75 (2.93)	2.96 (3.14)	3.14 (3.32)	3.35 (3.53)	3.56 (3.74)	3.77 (3.95)	3.95 (4.13)	–	–	–	–	–	–	–
BCY20	3.92 (4.27)	3.84 (4.20)	4.16 (4.51)	4.48 (4.83)	4.80 (5.15)	5.11 (5.47)	5.43 (5.78)	5.71 (6.07)	6.03 (6.38)	6.35 (6.70)	6.67 (7.02)	6.98 (7.34)	7.58 (7.94)	7.90 (8.25)	8.22 (8.57)	8.85 (9.21)	9.45 (9.81)
BCY25	5.71 (6.28)	5.57 (6.14)	6.00 (6.56)	6.42 (6.98)	6.88 (7.44)	7.30 (7.87)	7.72 (8.29)	8.15 (8.71)	8.57 (9.14)	8.99 (9.56)	9.42 (9.98)	9.84 (10.41)	10.69 (11.25)	11.15 (11.71)	11.57 (12.13)	12.42 (12.98)	13.26 (13.83)
BCY32	–	10.79 (12.20)	11.50 (12.91)	12.20 (13.62)	12.95 (14.36)	13.65 (15.06)	14.36 (15.77)	15.06 (16.47)	15.77 (17.18)	16.47 (17.88)	17.18 (18.59)	17.88 (19.29)	19.33 (20.74)	20.04 (21.45)	20.74 (22.15)	22.15 (23.56)	23.56 (24.97)
BCY40	–	15.41 (16.83)	16.23 (17.64)	17.04 (18.45)	17.88 (19.29)	18.69 (20.11)	19.54 (20.95)	20.35 (21.76)	21.16 (22.57)	21.98 (23.39)	22.82 (24.23)	23.63 (25.04)	25.29 (26.70)	26.10 (27.51)	26.91 (28.32)	28.57 (29.98)	30.19 (31.60)
BCY50	–	26.10 (29.45)	27.34 (30.69)	28.54 (31.89)	29.77 (33.12)	30.97 (34.32)	32.20 (35.56)	33.40 (36.75)	34.60 (37.95)	35.80 (39.15)	37.04 (40.39)	38.24 (41.59)	40.67 (44.02)	41.90 (45.26)	43.10 (46.46)	45.54 (48.89)	47.94 (51.29)
BCY63	–	41.41(44.76)	42.82 (46.17)	44.23 (47.58)	45.64 (48.99)	47.02 (50.37)	48.43 (51.78)	49.84 (53.19)	51.25 (54.60)	52.63(55.98)	54.04 (57.39)	55.45 (58.80)	58.27 (61.62)	59.68 (63.03)	61.06 (64.41)	63.88 (67.23)	66.67 (70.02)
BCY80	–	60.81(67.16)	62.65 (79.22)	64.48 (70.83)	66.31 (72.66)	68.15 (74.50)	69.98 (76.33)	71.82 (78.17)	73.65 (80.00)	75.49 (81.83)	77.35 (83.70)	79.19 (85.54)	82.86 (89.21)	84.69 (91.04)	86.53 (92.87)	90.19 (96.54)	93.86 (100.21)
BCY100	–	125.29 (135.87)	128.25 (145.89)	131.18 (148.82)	134.14 (151.78)	137.07 (154.71)	140.04 (157.67)	142.96 (160.60)	145.93 (163.56)	148.85 (159.44)	151.82 (169.45)	154.78 (172.42)	160.67 (178.31)	163.63 (181.27)	166.56 (184.20)	172.45 (190.09)	178.34 (195.98)
BCY125	–	185.96 (205.04)	188.92 (208.01)	191.85 (210.93)	194.81 (213.90)	197.74 (216.83)	200.71 (219.79)	203.63 (222.72)	206.60 (225.68)	209.52 (228.61)	212.49 (231.57)	215.45 (234.53)	221.34 (240.42)	224.30 (243.39)	227.23 (246.31)	233.12 (252.20)	239.01 (258.10)

Values in ( ) parentheses are masses for male thread specifications

● Single acting push type (standard, corrosion resistant specifications)

oz

Model	Stroke					
	5	10	15	20	25	30
BCSA6	0.78 (0.85)	0.88 (0.95)	0.99 (1.06)	–	–	–
BCSA8	1.06 (1.13)	1.16 (1.23)	1.27 (1.34)	–	–	–
BCSA10	1.20 (1.27)	1.31 (1.38)	1.41 (1.48)	–	–	–
BCSA12	1.73 (1.83)	1.87 (1.98)	2.01 (2.12)	2.15 (2.26)	2.29 (2.40)	2.43 (2.54)
BCSA16	2.57 (2.75)	2.79 (2.96)	3.00 (3.17)	3.21 (3.39)	3.42 (3.60)	3.63 (3.81)
BCSA20	3.88 (4.23)	4.20 (4.55)	4.51 (4.87)	4.83 (5.19)	5.15 (5.50)	5.47 (5.82)
BCSA25	5.64 (6.21)	6.10 (6.67)	6.56 (7.13)	7.02 (7.58)	7.48 (8.04)	7.94 (8.50)
BCSA32	–	10.19 (11.60)	11.22 (12.63)	12.24 (13.65)	13.26 (14.67)	14.29 (15.70)
BCSA40	–	15.03 (16.44)	16.16 (17.57)	17.28 (18.69)	18.41 (19.82)	19.54 (20.95)
BCSA50	–	26.46 (29.81)	27.72 (31.08)	28.99 (32.35)	30.26 (33.62)	31.53 (34.89)

Values in ( ) parentheses are masses for male thread specifications

● Single acting pull type (standard, corrosion resistant specifications)

oz

Model	Stroke					
	5	10	15	20	25	30
BCTA6	0.71 (0.78)	0.81 (0.88)	0.92 (0.99)	–	–	–
BCTA8	0.92 (0.99)	1.02 (1.09)	1.13 (1.20)	–	–	–
BCTA10	1.02 (1.09)	1.13 (1.20)	1.23 (1.31)	–	–	–
BCTA12	1.52 (1.62)	1.66 (1.76)	1.80 (1.90)	1.94 (2.05)	2.08 (2.19)	2.22 (2.33)
BCTA16	2.22 (2.40)	2.43 (2.61)	2.65 (2.82)	2.86 (3.03)	3.07 (3.25)	3.28 (3.46)
BCTA20	3.46 (3.81)	3.77 (4.13)	4.09 (4.44)	4.41 (4.76)	4.73 (5.08)	5.04 (5.40)
BCTA25	5.08 (5.64)	5.54 (6.10)	6.00 (6.56)	6.46 (7.02)	6.91 (7.48)	7.37 (7.94)
BCTA32	–	9.17 (10.58)	9.91 (11.32)	10.65 (12.06)	11.39 (12.80)	12.13 (13.54)
BCTA40	–	14.25 (15.66)	15.10 (16.51)	15.94 (17.35)	16.79 (18.20)	17.64 (19.05)
BCTA50	–	25.40 (28.75)	26.67 (30.02)	27.94 (31.29)	29.21 (32.56)	30.48 (33.83)

Values in ( ) parentheses are masses for male thread specifications

● Additional mass of sensor switches

ZE□□□A, ZE□□□G: 0.53 oz **ZE□□□B**: 1.23 oz

Inner construction

■ Double acting type (standard, corrosion resistant, heat resistant specifications) * For scraper specification structure diagrams, refer to page 30.

● ϕ6 to ϕ10 [0.236 to 0.394]

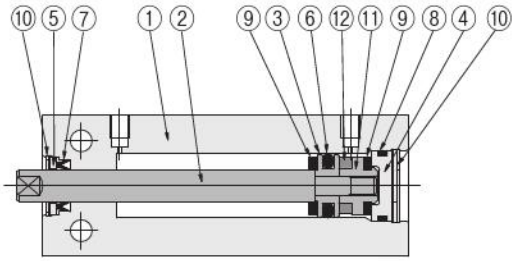

● ϕ12 to ϕ125 [0.472 to 4.921]

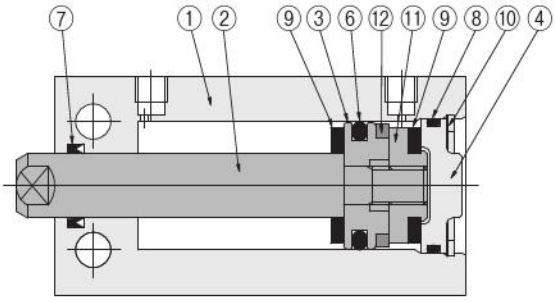

● Male thread specifications

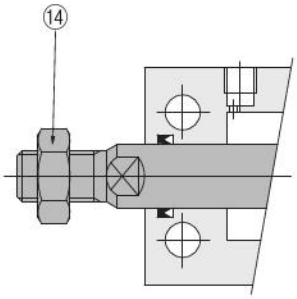

● 5 stroke for BC (R,F)20 and BC (R,F)25

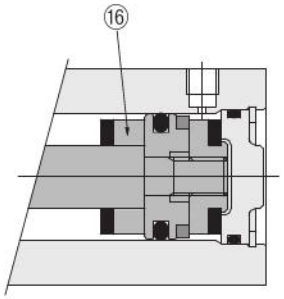

■ Single acting push type (standard, corrosion resistant specifications)

● ϕ6 to ϕ10 [0.236 to 0.394]

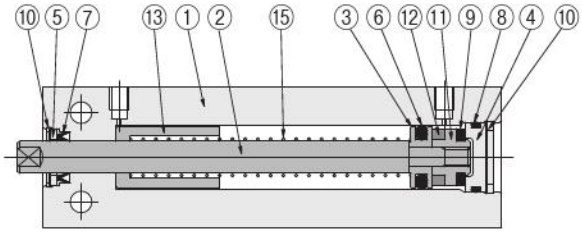

● ϕ12 [0.472]

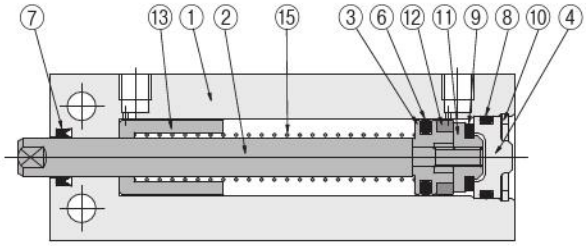

● ϕ16 [0.630]

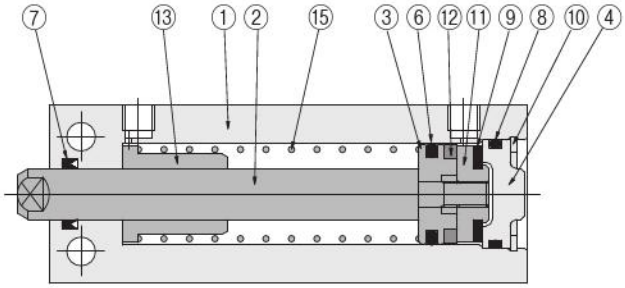

● ϕ20 to ϕ50 [0.787 to 1.969]

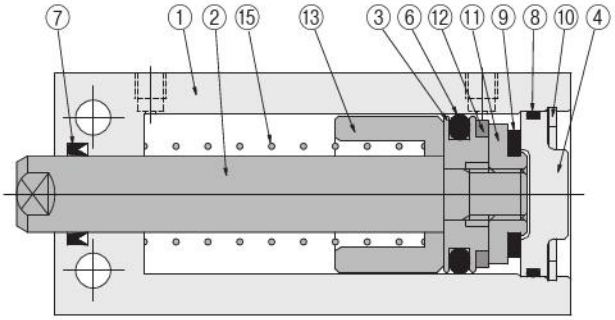

● Male thread specifications

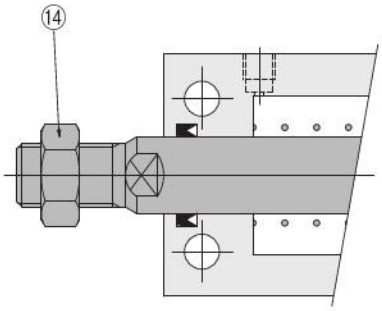

■ Single acting pull type (standard, corrosion resistant specifications)

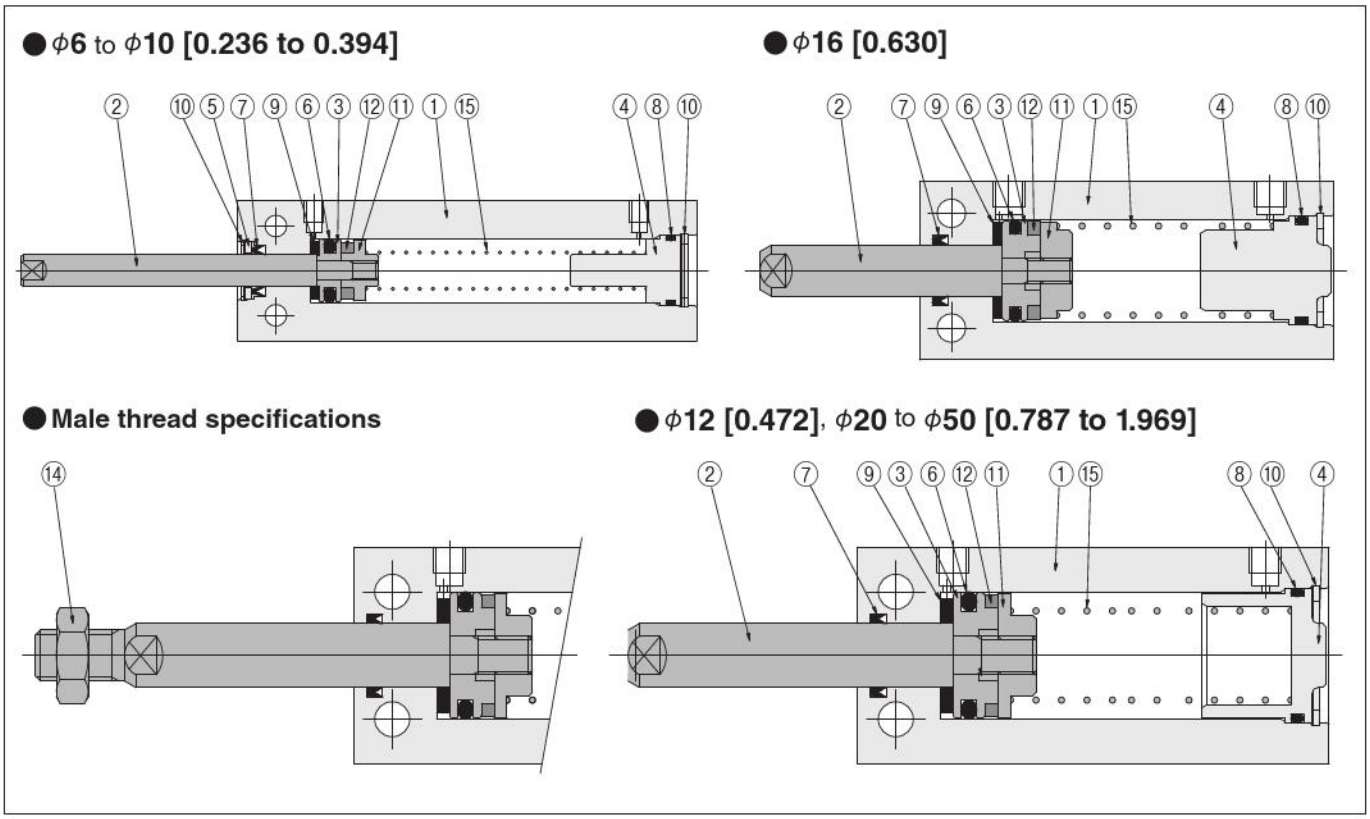

Major parts and materials (standard, corrosion resistant, heat resistant specifications)

No	Name	φ6 [0.236]	φ8 [0.315]	φ10 [0.394]	φ12 [0.472]	φ16 [0.630]	φ20 [0.787]	φ25 [0.984]	φ32 [1.260]	φ40 [1.575]	φ50 [1.969]	φ63 [2.480]	φ80 [3.150]	φ100 [3.937]	φ125 [4.921]
①	Cylinder body	Aluminum alloy (special anti-abrasion treated)													
②	Piston rod	Stainless steel							Carbon steel (Corrosion and heat resistant specifications are stainless steel.)						
③	Piston	Stainless steel				Aluminum alloy (anodized)									
④	Head cover	Aluminum alloy (anodized)													
⑤	Packing holder	Aluminum alloy (anodized)			–	–	–	–	–	–	–	–	–	–	–
⑥	★Piston packing	Synthetic rubber (NBR) (heat resistant specification: FKM)													
⑦	★Rod packing	Synthetic rubber (NBR) (heat resistant specification: FKM)													
⑧	★O-ring	Synthetic rubber (NBR) (heat resistant specification: FKM)													
⑨	Bumper	Urethane rubber	Synthetic rubber (NBR)												
		(heat resistant specification: FKM)													
⑩	★Retaining ring	Stainless steel Note 1			Steel (Corrosion and heat resistant specifications are electroless nickel plated.)										
⑪	Support	Stainless steel	Aluminum alloy (anodized) Note 2												
⑫	Magnet	Neodymium magnet (not attached to heat resistant specification)							Plastic magnet (not attached to heat resistant specification)						
⑬	Spring support	Stainless steel					Aluminum alloy (anodized)					–	–	–	–
⑭	Rod end nut	Carbon steel (Corrosion and heat resistant specifications are stainless steel.)													
⑮	★Spring	Piano wire										–	–	–	–
⑯	Collar Note 3	–	–	–	–	–	Aluminum alloy (anodized)		–	–	–	–	–	–	–

Items indicated by a ★ are available as additional parts or in packing sets. For order codes, see pages 92 and 93.

Note 1: φ6 [0.236], φ8 [0.315], and φ10 [0.394] head cover side is steel. (Corrosion and heat resistant specifications are electroless nickel plated.)
2: φ8 [0.315] and φ10 [0.394] single acting pull types are stainless steel.
3: Only 5-stroke models are attached with a collar.

■ Double acting type (scraper specification)

● ϕ10 [0.394]

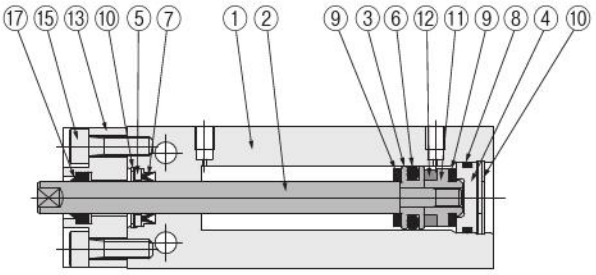

● ϕ12 to ϕ125 [0.472 to 4.921]

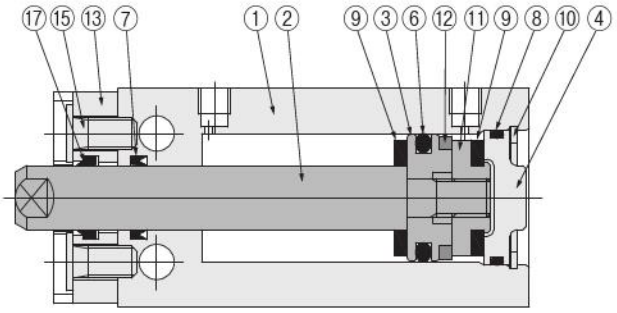

● Male thread specifications

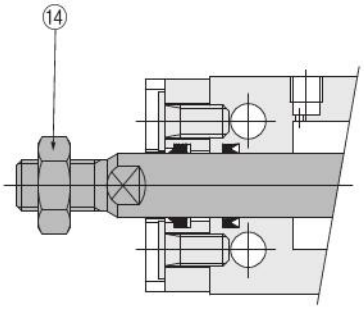

● 5 stroke for BCY20 and BCY25

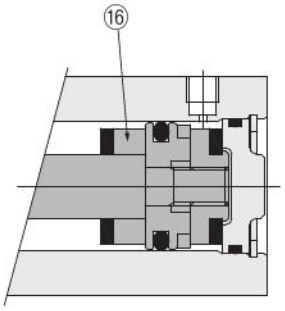

Major parts and materials (scraper specification)

No	Name	ϕ10 [0.394]	ϕ12 [0.472]	ϕ16 [0.630]	ϕ20 [0.787]	ϕ25 [0.984]	ϕ32 [1.260]	ϕ40 [1.575]	ϕ50 [1.969]	ϕ63 [2.480]	ϕ80 [3.150]	ϕ100 [3.937]	ϕ125 [4.921]
①	Cylinder body	Aluminum alloy (special anti-abrasion treated)											
②	Piston rod	Stainless steel											
③	Piston	Stainless steel		Aluminum alloy (anodized)									
④	Head cover	Aluminum alloy (anodized)											
⑤	Packing holder	Aluminum alloy (Anodized)	–	–	–	–	–	–	–	–	–	–	–
⑥	★Piston packing	Synthetic rubber (NBR)											
⑦	★Rod packing	Synthetic rubber (NBR)											
⑧	★O-ring	Synthetic rubber (NBR)											
⑨	Bumper	Synthetic rubber (NBR)											
⑩	★Retaining ring	Steel (electroless nickel plated)											
⑪	Support	Aluminum alloy (anodized)											
⑫	Magnet	Neodymium magnet					Plastic magnet						
⑬	Scraper block	Aluminum alloy (anodized)											
⑭	Rod end nut	Stainless steel											
⑮	Bolt	Stainless steel											
⑯	Collar Note	–	–	–	Aluminum alloy (anodized)		–	–	–	–	–	–	–
⑰	Scraper	Synthetic rubber (NBR)											

Items indicated by a ★ are available as additional parts or in packing sets. For order codes, see page 32.

Note: Only 5-stroke models are attached with a collar.

Double acting type dimensions (mm [in.])

- **BC6**
- **BCR6 (corrosion resistant specification)**
- **BCF6 (heat resistant specification)**
- **CSL-BC6 (clean room specification, without dust collection port)**

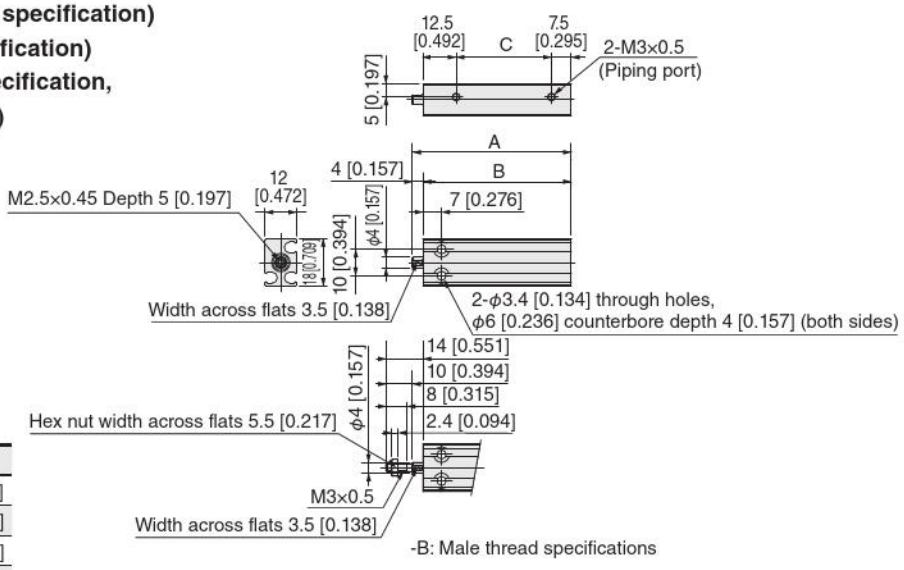

Stroke	A	B	C
5	35 [1.378]	31 [1.220]	11 [0.433]
10	40 [1.575]	36 [1.417]	16 [0.630]
15	45 [1.772]	41 [1.614]	21 [0.827]
20	50 [1.969]	46 [1.811]	26 [1.024]
25	55 [2.165]	51 [2.008]	31 [1.220]
30	60 [2.362]	56 [2.205]	36 [1.417]

Note: This product cannot use reed switch type sensor switches.

- **BC8**
- **BCR8 (corrosion resistant specification)**
- **BCF8 (heat resistant specification)**
- **CSL-BC8 (clean room specification, without dust collection port)**

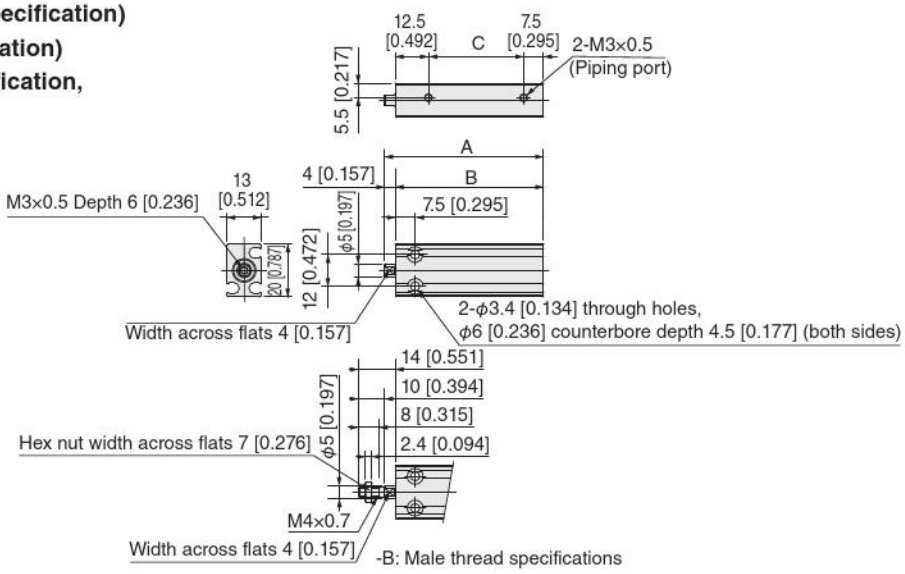

Stroke	A	B	C
5	35 [1.378]	31 [1.220]	11 [0.433]
10	40 [1.575]	36 [1.417]	16 [0.630]
15	45 [1.772]	41 [1.614]	21 [0.827]
20	50 [1.969]	46 [1.811]	26 [1.024]
25	55 [2.165]	51 [2.008]	31 [1.220]
30	60 [2.362]	56 [2.205]	36 [1.417]

Note: This product cannot use reed switch type sensor switches.

Double acting type dimensions (mm [in.])

- **BC10**
- **BCR10** (corrosion resistant specification)
- **BCF10** (heat resistant specification)
- **CSL-BC10** (clean room specification, without dust collection port)

* Refer to page 33 for scraper specification dimensions.

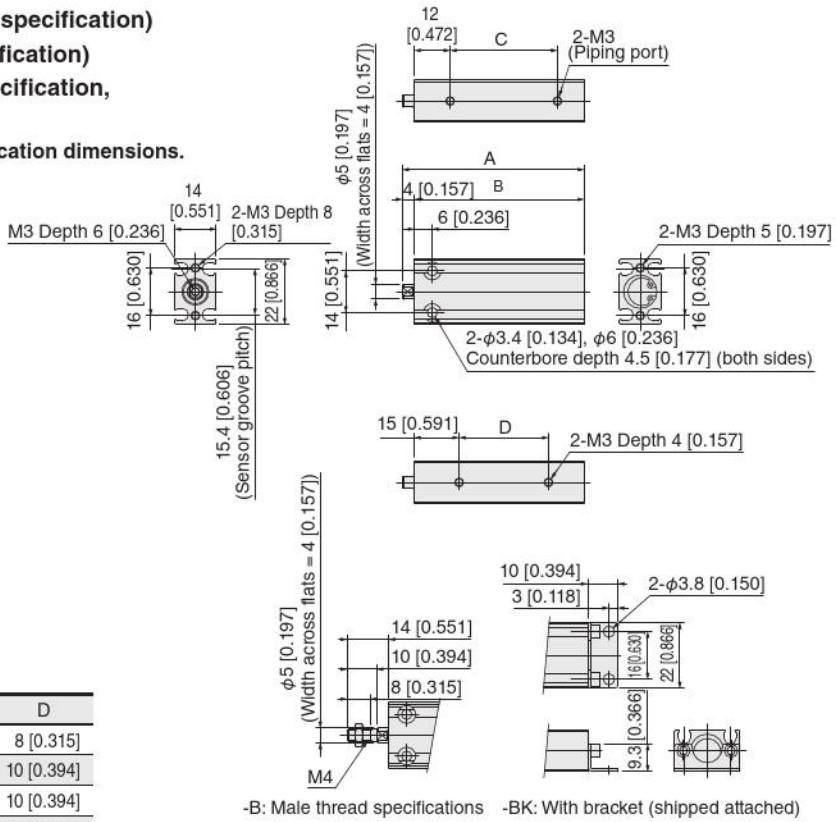

-B: Male thread specifications -BK: With bracket (shipped attached)

Stroke	A	B	C	D
5	36 [1.417]	32 [1.260]	11 [0.433]	8 [0.315]
10	41 [1.614]	37 [1.457]	16 [0.630]	10 [0.394]
15	46 [1.811]	42 [1.654]	21 [0.827]	10 [0.394]
20	51 [2.008]	47 [1.850]	26 [1.024]	20 [0.787]
25	56 [2.205]	52 [2.047]	31 [1.220]	20 [0.787]
30	61 [2.402]	57 [2.244]	36 [1.417]	30 [1.181]

Note: This product cannot use reed switch type sensor switches.

- **BC12**
- **BCR12** (corrosion resistant specification)
- **BCF12** (heat resistant specification)
- **CSL-BC12** (clean room specification, without dust collection port)

* Refer to page 33 for scraper specification dimensions.

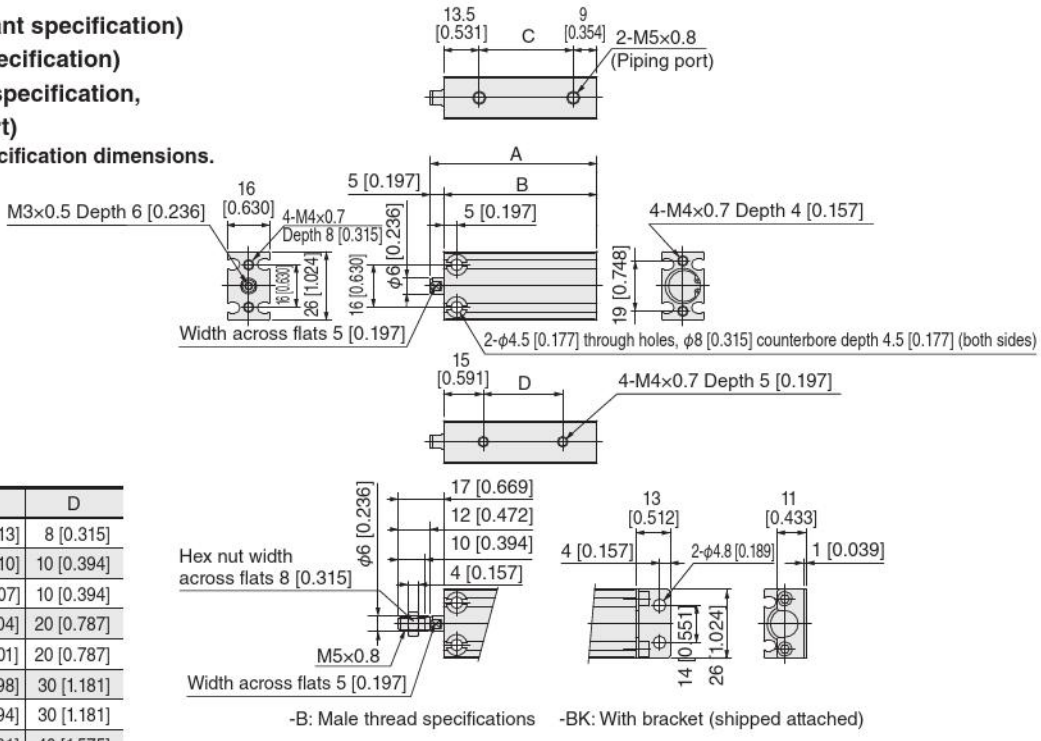

-B: Male thread specifications -BK: With bracket (shipped attached)

Stroke	A	B	C	D
5	38 [1.496]	33 [1.299]	10.5 [0.413]	8 [0.315]
10	43 [1.693]	38 [1.496]	15.5 [0.610]	10 [0.394]
15	48 [1.890]	43 [1.693]	20.5 [0.807]	10 [0.394]
20	53 [2.087]	48 [1.890]	25.5 [1.004]	20 [0.787]
25	58 [2.283]	53 [2.087]	30.5 [1.201]	20 [0.787]
30	63 [2.480]	58 [2.283]	35.5 [1.398]	30 [1.181]
35	68 [2.677]	63 [2.480]	40.5 [1.594]	30 [1.181]
40	73 [2.874]	68 [2.677]	45.5 [1.791]	40 [1.575]
45	78 [3.071]	73 [2.874]	50.5 [1.988]	40 [1.575]
50	83 [3.268]	78 [3.071]	55.5 [2.185]	50 [1.969]

Note: This product cannot use reed switch type sensor switches.

Double acting type dimensions (mm [in.])

- **BC16**
- **BCR16** (corrosion resistant specification)
- **BCF16** (heat resistant specification)
- **CSL-BC16** (clean room specification, without dust collection port)

* Refer to page 39 for scraper specification dimensions.

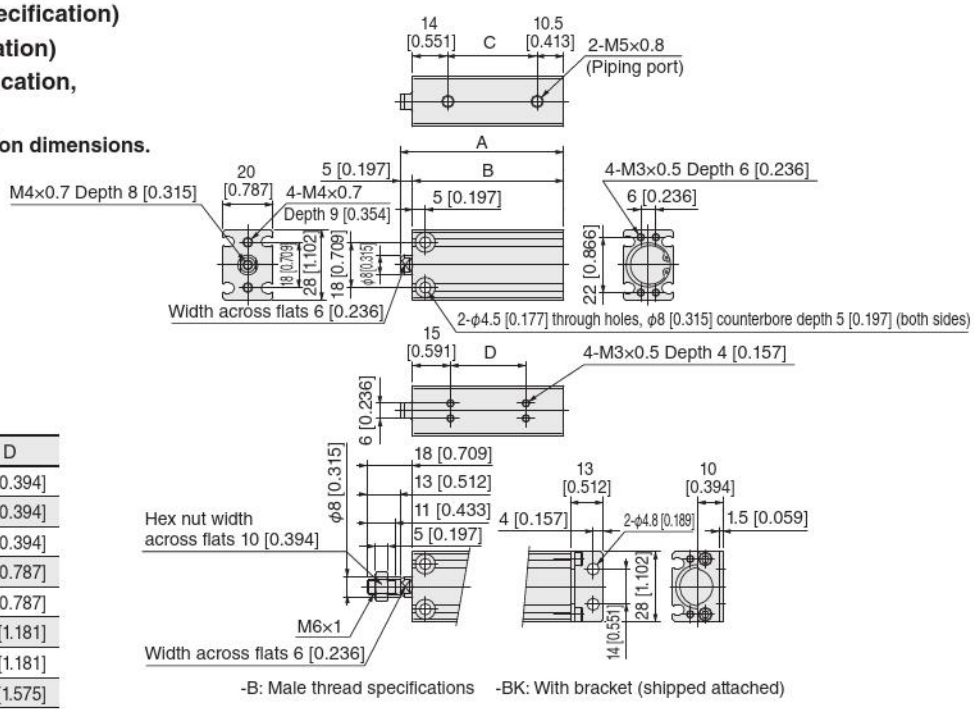

Stroke	A	B	C	D
5	40 [1.575]	35 [1.378]	10.5 [0.413]	10 [0.394]
10	45 [1.772]	40 [1.575]	15.5 [0.610]	10 [0.394]
15	50 [1.969]	45 [1.772]	20.5 [0.807]	10 [0.394]
20	55 [2.165]	50 [1.969]	25.5 [1.004]	20 [0.787]
25	60 [2.362]	55 [2.165]	30.5 [1.201]	20 [0.787]
30	65 [2.559]	60 [2.362]	35.5 [1.398]	30 [1.181]
35	70 [2.756]	65 [2.559]	40.5 [1.594]	30 [1.181]
40	75 [2.953]	70 [2.756]	45.5 [1.791]	40 [1.575]
45	80 [3.150]	75 [2.953]	50.5 [1.988]	40 [1.575]
50	85 [3.346]	80 [3.150]	55.5 [2.185]	50 [1.969]

- **BC20**
- **BCR20** (corrosion resistant specification)
- **BCF20** (heat resistant specification)
- **CSL-BC20** (clean room specification, without dust collection port)

* Refer to page 39 for scraper specification dimensions.

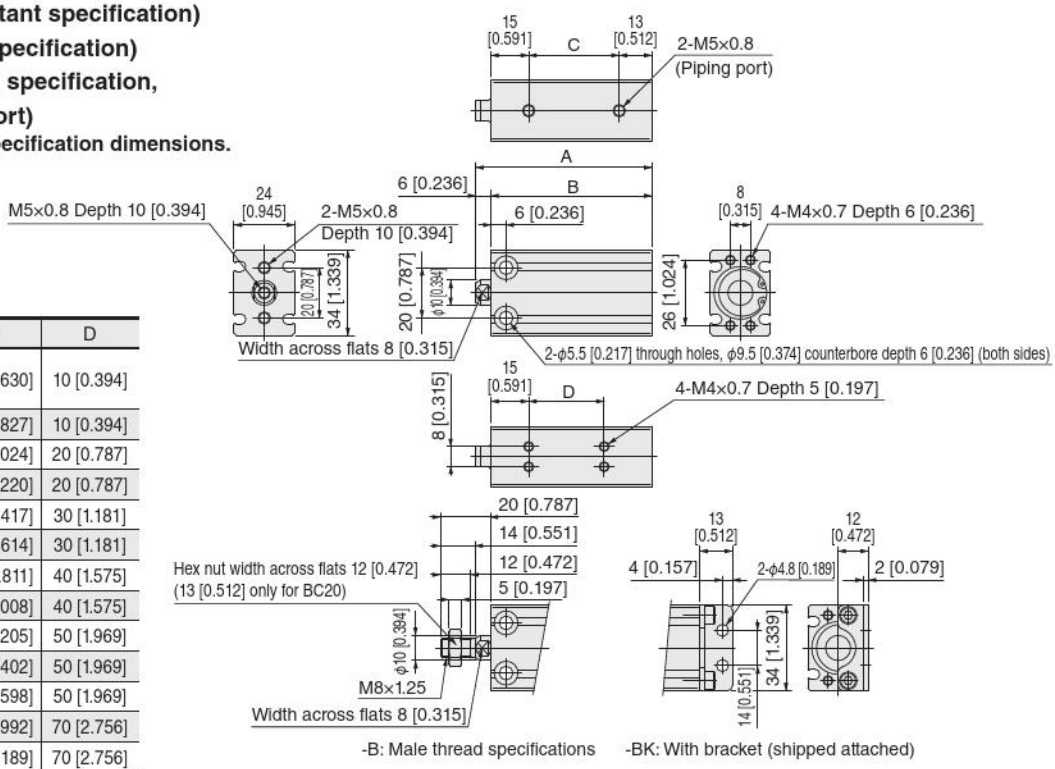

Stroke	A	B	C	D
5	50 [1.969]	44 [1.732]	16 [0.630]	10 [0.394]
10				
15	55 [2.165]	49 [1.929]	21 [0.827]	10 [0.394]
20	60 [2.362]	54 [2.126]	26 [1.024]	20 [0.787]
25	65 [2.559]	59 [2.323]	31 [1.220]	20 [0.787]
30	70 [2.756]	64 [2.520]	36 [1.417]	30 [1.181]
35	75 [2.953]	69 [2.717]	41 [1.614]	30 [1.181]
40	80 [3.150]	74 [2.913]	46 [1.811]	40 [1.575]
45	85 [3.346]	79 [3.110]	51 [2.008]	40 [1.575]
50	90 [3.543]	84 [3.307]	56 [2.205]	50 [1.969]
55	95 [3.740]	89 [3.504]	61 [2.402]	50 [1.969]
60	100 [3.937]	94 [3.701]	66 [2.598]	50 [1.969]
70	110 [4.331]	104 [4.094]	76 [2.992]	70 [2.756]
75	115 [4.528]	109 [4.291]	81 [3.189]	70 [2.756]
80	120 [4.724]	114 [4.488]	86 [3.386]	70 [2.756]
90	130 [5.118]	124 [4.882]	96 [3.780]	90 [3.543]
100	140 [5.512]	134 [5.276]	106 [4.173]	90 [3.543]

Note: 5-stroke models are available with collar insertion.

Double acting type dimensions (mm [in.])

- **BC25**
- **BCR25** (corrosion resistant specification)
- **BCF25** (heat resistant specification)
- **CSL-BC25** (clean room specification, without dust collection port)

* Refer to page 40 for scraper specification dimensions.

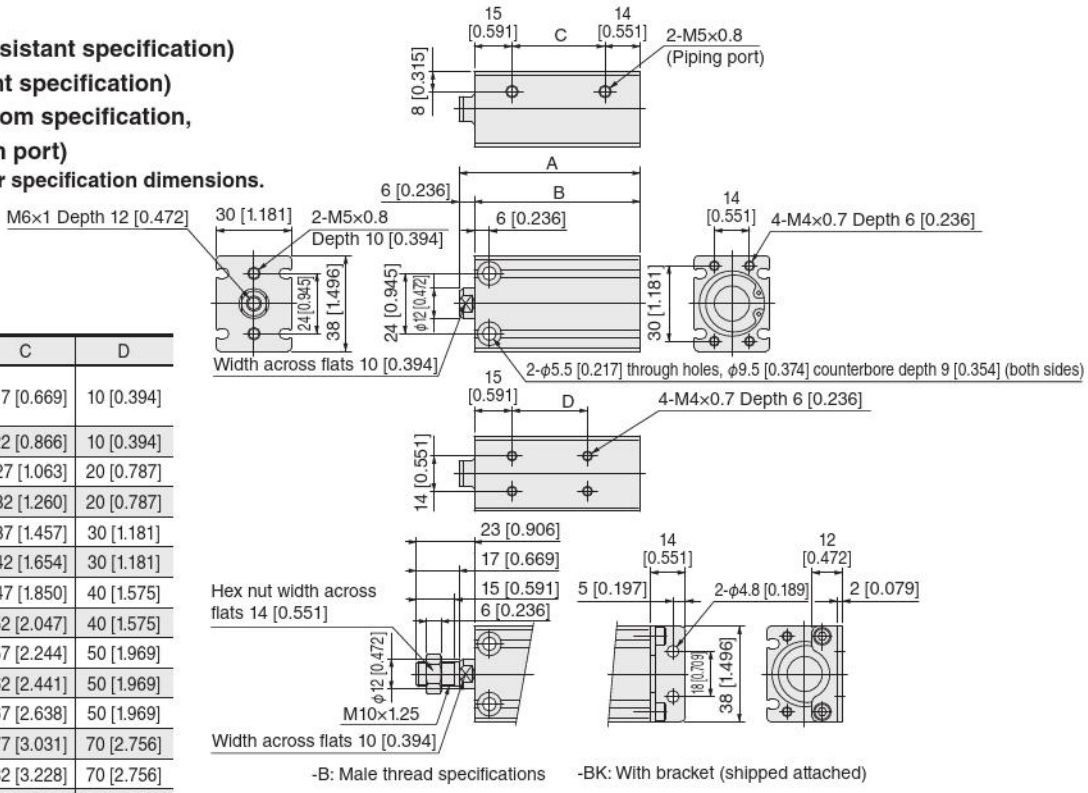

Stroke	A	B	C	D
5	52 [2.047]	46 [1.811]	17 [0.669]	10 [0.394]
10				
15	57 [2.244]	51 [2.008]	22 [0.866]	10 [0.394]
20	62 [2.441]	56 [2.205]	27 [1.063]	20 [0.787]
25	67 [2.638]	61 [2.402]	32 [1.260]	20 [0.787]
30	72 [2.835]	66 [2.598]	37 [1.457]	30 [1.181]
35	77 [3.031]	71 [2.795]	42 [1.654]	30 [1.181]
40	82 [3.228]	76 [2.992]	47 [1.850]	40 [1.575]
45	87 [3.425]	81 [3.189]	52 [2.047]	40 [1.575]
50	92 [3.622]	86 [3.386]	57 [2.244]	50 [1.969]
55	97 [3.819]	91 [3.583]	62 [2.441]	50 [1.969]
60	102 [4.016]	96 [3.780]	67 [2.638]	50 [1.969]
70	112 [4.409]	106 [4.173]	77 [3.031]	70 [2.756]
75	117 [4.606]	111 [4.370]	82 [3.228]	70 [2.756]
80	122 [4.803]	116 [4.567]	87 [3.425]	70 [2.756]
90	132 [5.197]	126 [4.961]	97 [3.819]	90 [3.543]
100	142 [5.591]	136 [5.354]	107 [4.213]	90 [3.543]

Note: 5-stroke models are available with collar insertion.

- **BC32**
- **BCR32** (corrosion resistant specification)
- **BCF32** (heat resistant specification)
- **CSL-BC32** (clean room specification, without dust collection port)

* Refer to page 40 for scraper specification dimensions.

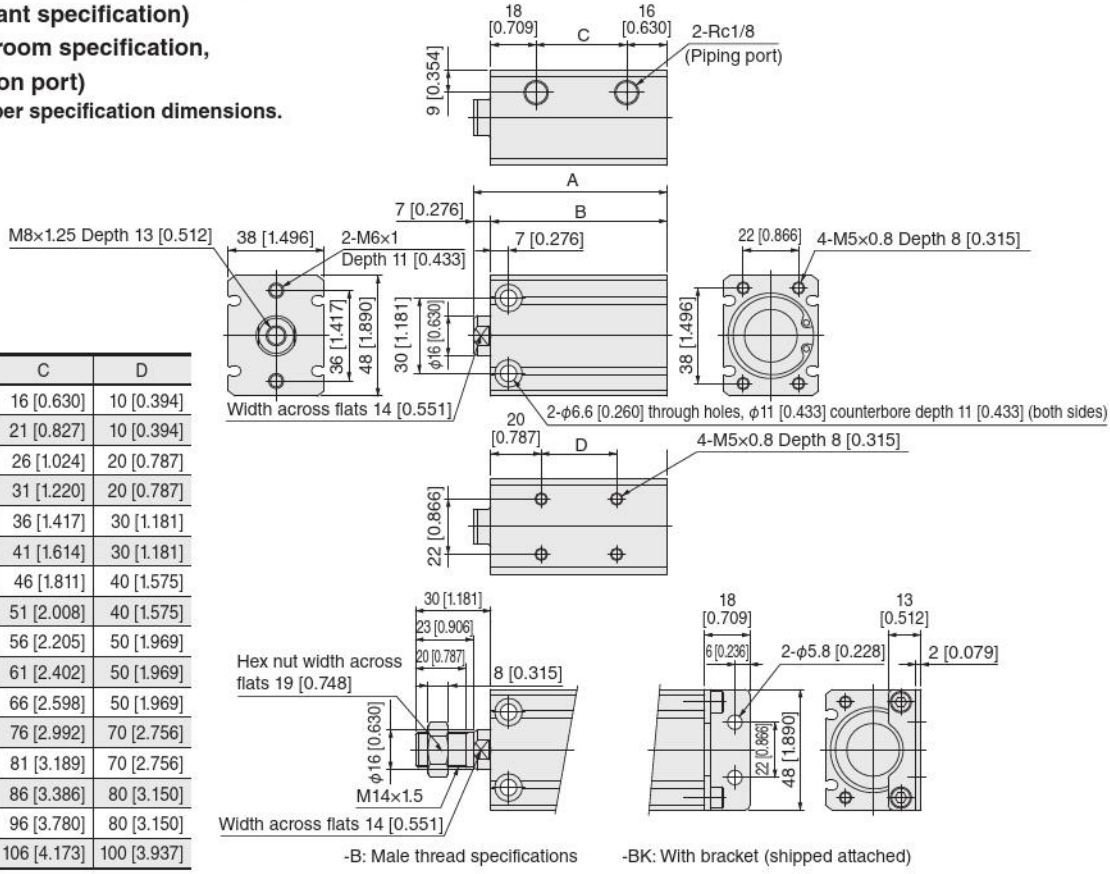

Stroke	A	B	C	D
10	57 [2.244]	50 [1.969]	16 [0.630]	10 [0.394]
15	62 [2.441]	55 [2.165]	21 [0.827]	10 [0.394]
20	67 [2.638]	60 [2.362]	26 [1.024]	20 [0.787]
25	72 [2.835]	65 [2.559]	31 [1.220]	20 [0.787]
30	77 [3.031]	70 [2.756]	36 [1.417]	30 [1.181]
35	82 [3.228]	75 [2.953]	41 [1.614]	30 [1.181]
40	87 [3.425]	80 [3.150]	46 [1.811]	40 [1.575]
45	92 [3.622]	85 [3.346]	51 [2.008]	40 [1.575]
50	97 [3.819]	90 [3.543]	56 [2.205]	50 [1.969]
55	102 [4.016]	95 [3.740]	61 [2.402]	50 [1.969]
60	107 [4.213]	100 [3.937]	66 [2.598]	50 [1.969]
70	117 [4.606]	110 [4.331]	76 [2.992]	70 [2.756]
75	122 [4.803]	115 [4.528]	81 [3.189]	70 [2.756]
80	127 [5.000]	120 [4.724]	86 [3.386]	80 [3.150]
90	137 [5.394]	130 [5.118]	96 [3.780]	80 [3.150]
100	147 [5.787]	140 [5.512]	106 [4.173]	100 [3.937]

Double acting type dimensions (mm [in.])

- **BC40**
- **BCR40** (corrosion resistant specification)
- **BCF40** (heat resistant specification)
- **CSL-BC40** (clean room specification, without dust collection port)

* Refer to page 41 for scraper specification dimensions.

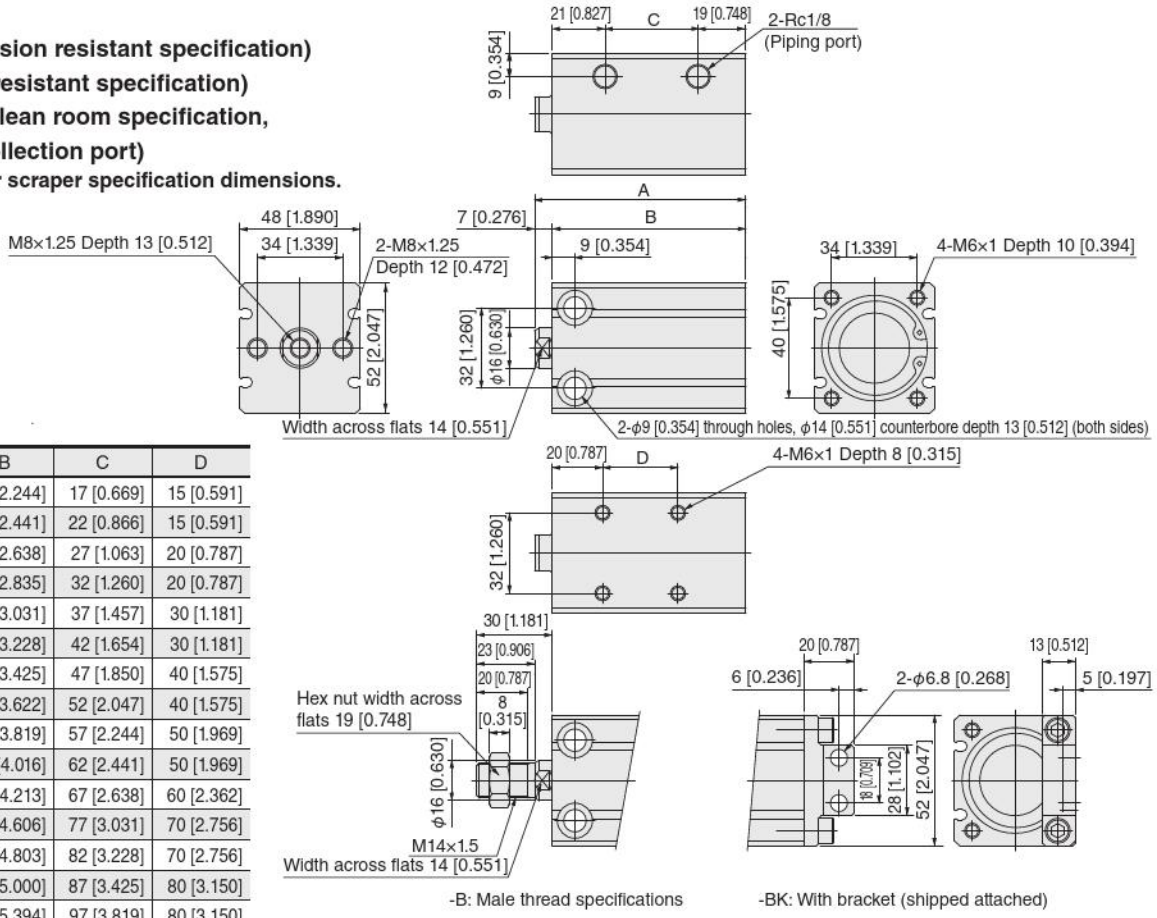

Stroke	A	B	C	D
10	64 [2.520]	57 [2.244]	17 [0.669]	15 [0.591]
15	69 [2.717]	62 [2.441]	22 [0.866]	15 [0.591]
20	74 [2.913]	67 [2.638]	27 [1.063]	20 [0.787]
25	79 [3.110]	72 [2.835]	32 [1.260]	20 [0.787]
30	84 [3.307]	77 [3.031]	37 [1.457]	30 [1.181]
35	89 [3.504]	82 [3.228]	42 [1.654]	30 [1.181]
40	94 [3.701]	87 [3.425]	47 [1.850]	40 [1.575]
45	99 [3.898]	92 [3.622]	52 [2.047]	40 [1.575]
50	104 [4.094]	97 [3.819]	57 [2.244]	50 [1.969]
55	109 [4.291]	102 [4.016]	62 [2.441]	50 [1.969]
60	114 [4.488]	107 [4.213]	67 [2.638]	60 [2.362]
70	124 [4.882]	117 [4.606]	77 [3.031]	70 [2.756]
75	129 [5.079]	122 [4.803]	82 [3.228]	70 [2.756]
80	134 [5.276]	127 [5.000]	87 [3.425]	80 [3.150]
90	144 [5.669]	137 [5.394]	97 [3.819]	80 [3.150]
100	154 [6.063]	147 [5.787]	107 [4.213]	100 [3.937]

- **BC50**
- **BCR50** (corrosion resistant specification)
- **BCF50** (heat resistant specification)
- **CSL-BC50** (clean room specification, without dust collection port)

* Refer to page 41 for scraper specification dimensions.

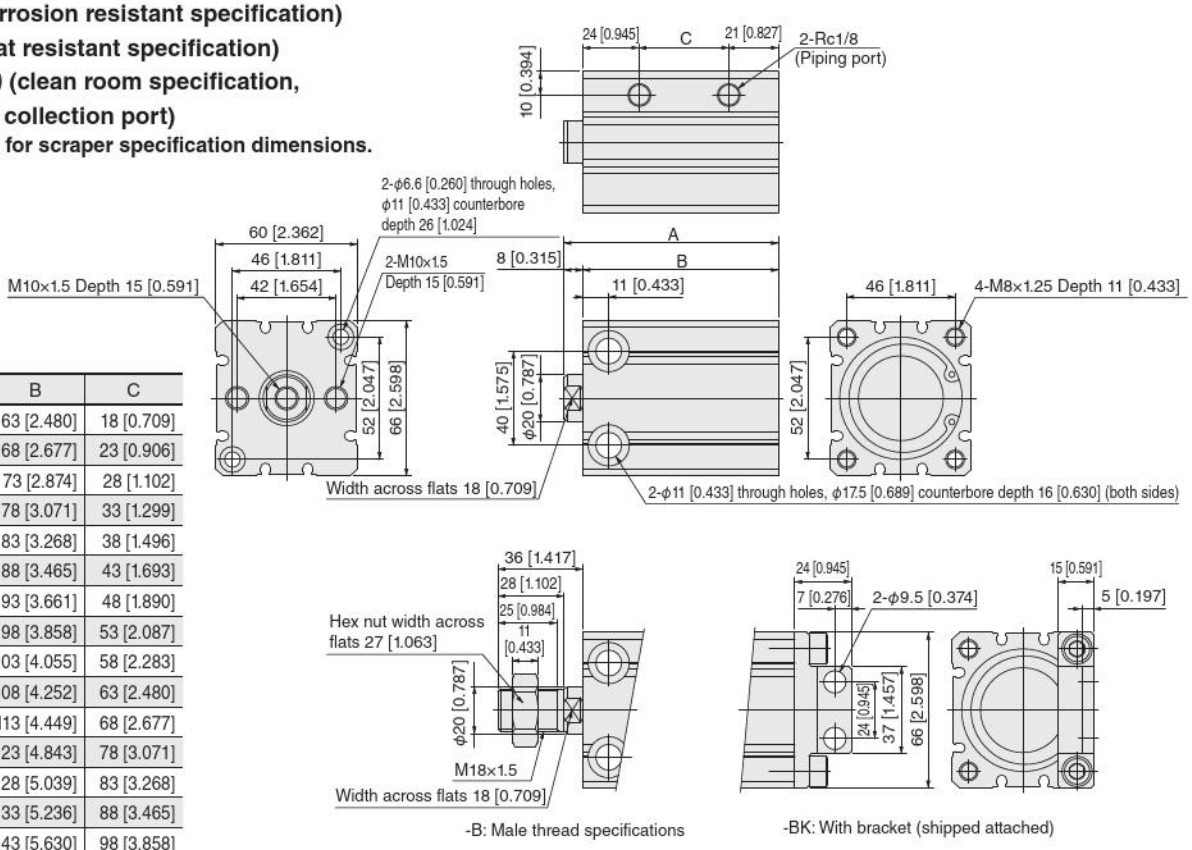

Stroke	A	B	C
10	71 [2.795]	63 [2.480]	18 [0.709]
15	76 [2.992]	68 [2.677]	23 [0.906]
20	81 [3.189]	73 [2.874]	28 [1.102]
25	86 [3.386]	78 [3.071]	33 [1.299]
30	91 [3.583]	83 [3.268]	38 [1.496]
35	96 [3.780]	88 [3.465]	43 [1.693]
40	101 [3.976]	93 [3.661]	48 [1.890]
45	106 [4.173]	98 [3.858]	53 [2.087]
50	111 [4.370]	103 [4.055]	58 [2.283]
55	116 [4.567]	108 [4.252]	63 [2.480]
60	121 [4.764]	113 [4.449]	68 [2.677]
70	131 [5.157]	123 [4.843]	78 [3.071]
75	136 [5.354]	128 [5.039]	83 [3.268]
80	141 [5.551]	133 [5.236]	88 [3.465]
90	151 [5.945]	143 [5.630]	98 [3.858]
100	161 [6.339]	153 [6.024]	108 [4.252]

Double acting type dimensions (mm [in.])

● BC63
● BCR63 (corrosion resistant specification)
● BCF63 (heat resistant specification)
● CSL-BC63 (clean room specification, without dust collection port)

* Refer to page 42 for scraper specification dimensions.

Stroke	A	B	C
10	79 [3.110]	71 [2.795]	21 [0.827]
15	84 [3.307]	76 [2.992]	26 [1.024]
20	89 [3.504]	81 [3.189]	31 [1.220]
25	94 [3.701]	86 [3.386]	36 [1.417]
30	99 [3.898]	91 [3.583]	41 [1.614]
35	104 [4.094]	96 [3.780]	46 [1.811]
40	109 [4.291]	101 [3.976]	51 [2.008]
45	114 [4.488]	106 [4.173]	56 [2.205]
50	119 [4.685]	111 [4.370]	61 [2.402]
55	124 [4.882]	116 [4.567]	66 [2.598]
60	129 [5.079]	121 [4.764]	71 [2.795]
70	139 [5.472]	131 [5.157]	81 [3.189]
75	144 [5.669]	136 [5.354]	86 [3.386]
80	149 [5.866]	141 [5.551]	91 [3.583]
90	159 [6.260]	151 [5.945]	101 [3.976]
100	169 [6.654]	161 [6.339]	111 [4.370]

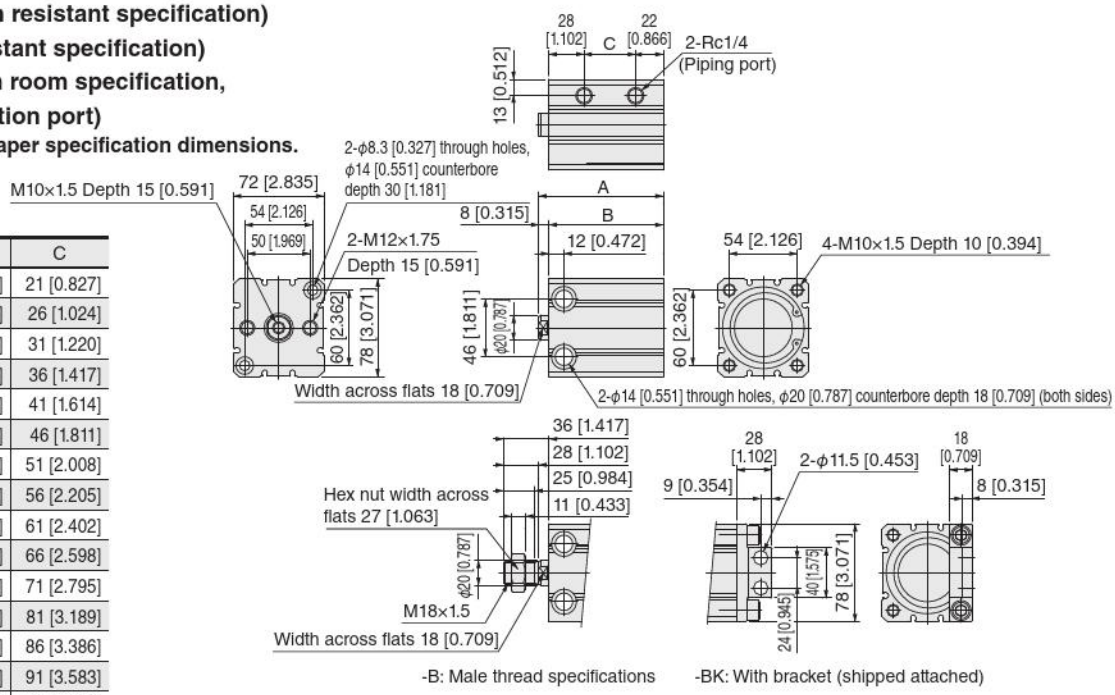

● BC80
● BCR80 (corrosion resistant specification)
● BCF80 (heat resistant specification)

* Refer to page 42 for scraper specification dimensions.

Stroke	A	B	C
10	84 [3.307]	74 [2.913]	24 [0.945]
15	89 [3.504]	79 [3.110]	29 [1.142]
20	94 [3.701]	84 [3.307]	34 [1.339]
25	99 [3.898]	89 [3.504]	39 [1.535]
30	104 [4.094]	94 [3.701]	44 [1.732]
35	109 [4.291]	99 [3.898]	49 [1.929]
40	114 [4.488]	104 [4.094]	54 [2.126]
45	119 [4.685]	109 [4.291]	59 [2.323]
50	124 [4.882]	114 [4.488]	64 [2.520]
55	129 [5.079]	119 [4.685]	69 [2.717]
60	134 [5.276]	124 [4.882]	74 [2.913]
70	144 [5.669]	134 [5.276]	84 [3.307]
75	149 [5.866]	139 [5.472]	89 [3.504]
80	154 [6.063]	144 [5.669]	94 [3.701]
90	164 [6.457]	154 [6.063]	104 [4.094]
100	174 [6.850]	164 [6.457]	114 [4.488]

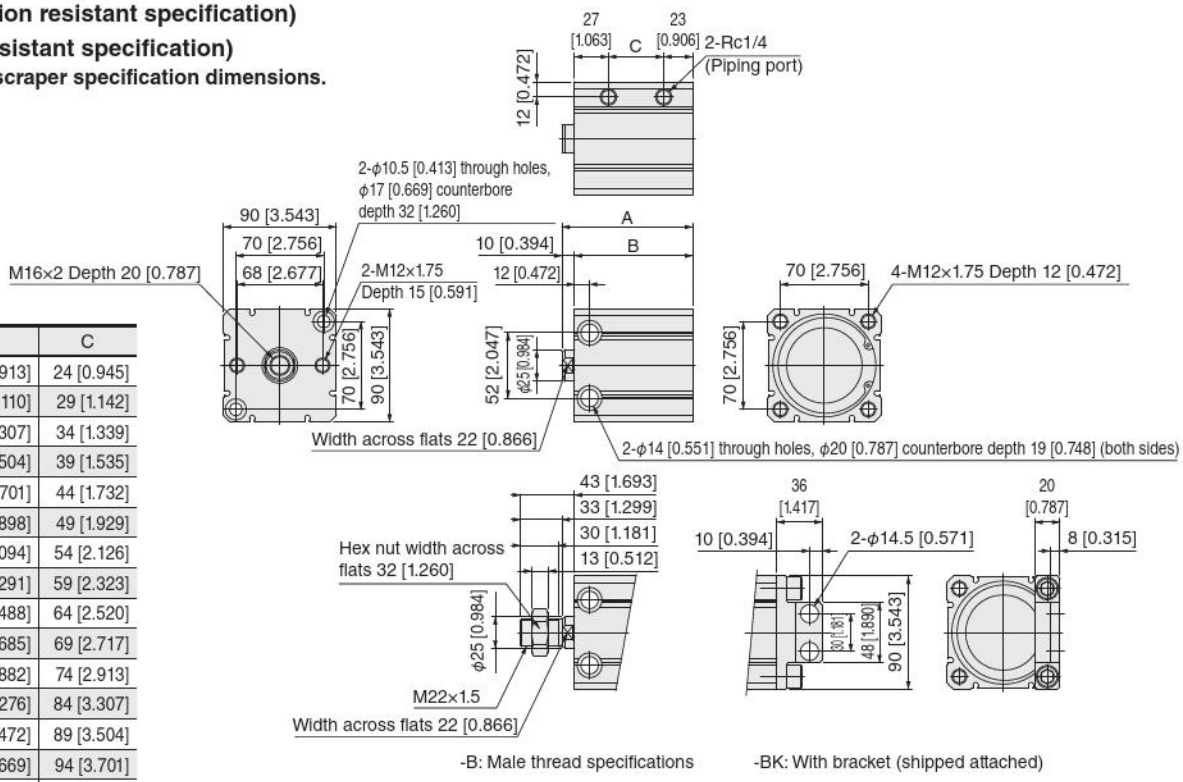

Double acting type dimensions (mm [in.])

●BC100
●BCR100 (corrosion resistant specification)
●BCF100 (heat resistant specification)

*** Refer to page 43 for scraper specification dimensions.**

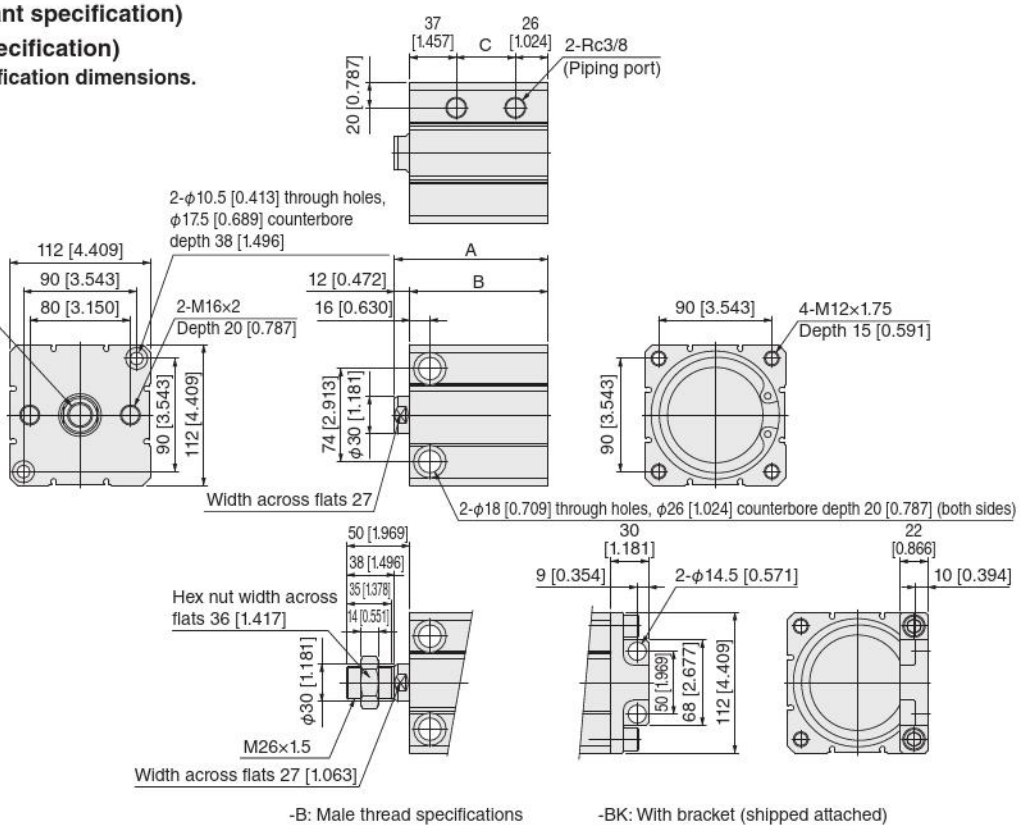

Stroke	A	B	C
10	102 [4.016]	90 [3.543]	27 [1.063]
15	107 [4.213]	95 [3.740]	32 [1.260]
20	112 [4.409]	100 [3.937]	37 [1.457]
25	117 [4.606]	105 [4.134]	42 [1.654]
30	122 [4.803]	110 [4.331]	47 [1.850]
35	127 [5.000]	115 [4.528]	52 [2.047]
40	132 [5.197]	120 [4.724]	57 [2.244]
45	137 [5.394]	125 [4.921]	62 [2.441]
50	142 [5.591]	130 [5.118]	67 [2.638]
55	147 [5.787]	135 [5.315]	72 [2.835]
60	152 [5.984]	140 [5.512]	77 [3.031]
70	162 [6.378]	150 [5.906]	87 [3.425]
75	167 [6.575]	155 [6.102]	92 [3.622]
80	172 [6.772]	160 [6.299]	97 [3.819]
90	182 [7.165]	170 [6.693]	107 [4.213]
100	192 [7.559]	180 [7.087]	117 [4.606]

●BC125
●BCR125 (corrosion resistant specification)
●BCF125 (heat resistant specification)

*** Refer to page 43 for scraper specification dimensions.**

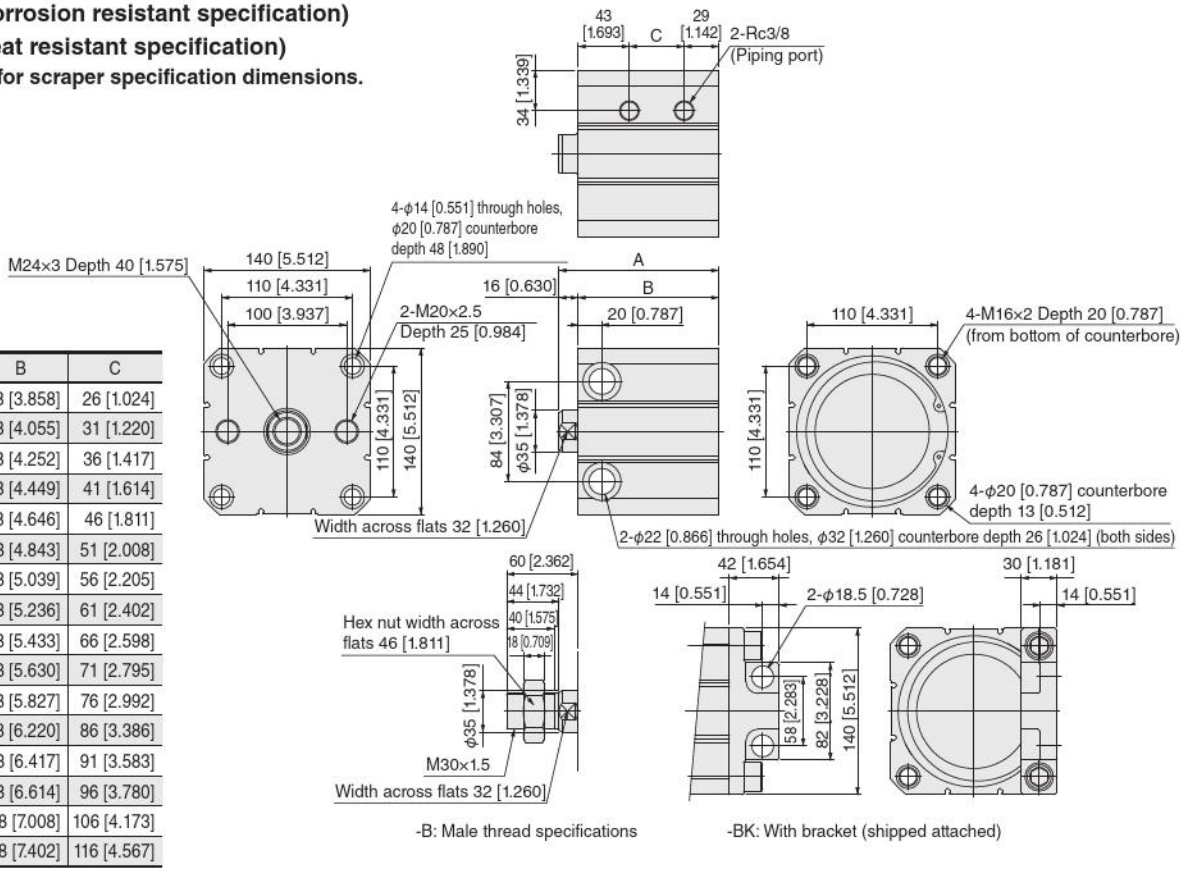

Stroke	A	B	C
10	114 [4.488]	98 [3.858]	26 [1.024]
15	119 [4.685]	103 [4.055]	31 [1.220]
20	124 [4.882]	108 [4.252]	36 [1.417]
25	129 [5.079]	113 [4.449]	41 [1.614]
30	134 [5.276]	118 [4.646]	46 [1.811]
35	139 [5.472]	123 [4.843]	51 [2.008]
40	144 [5.669]	128 [5.039]	56 [2.205]
45	149 [5.866]	133 [5.236]	61 [2.402]
50	154 [6.063]	138 [5.433]	66 [2.598]
55	159 [6.260]	143 [5.630]	71 [2.795]
60	164 [6.457]	148 [5.827]	76 [2.992]
70	174 [6.850]	158 [6.220]	86 [3.386]
75	179 [7.047]	163 [6.417]	91 [3.583]
80	184 [7.244]	168 [6.614]	96 [3.780]
90	194 [7.638]	178 [7.008]	106 [4.173]
100	204 [8.031]	188 [7.402]	116 [4.567]

Double acting type dimensions (mm [in.])

● BCY10 (scraper specification)

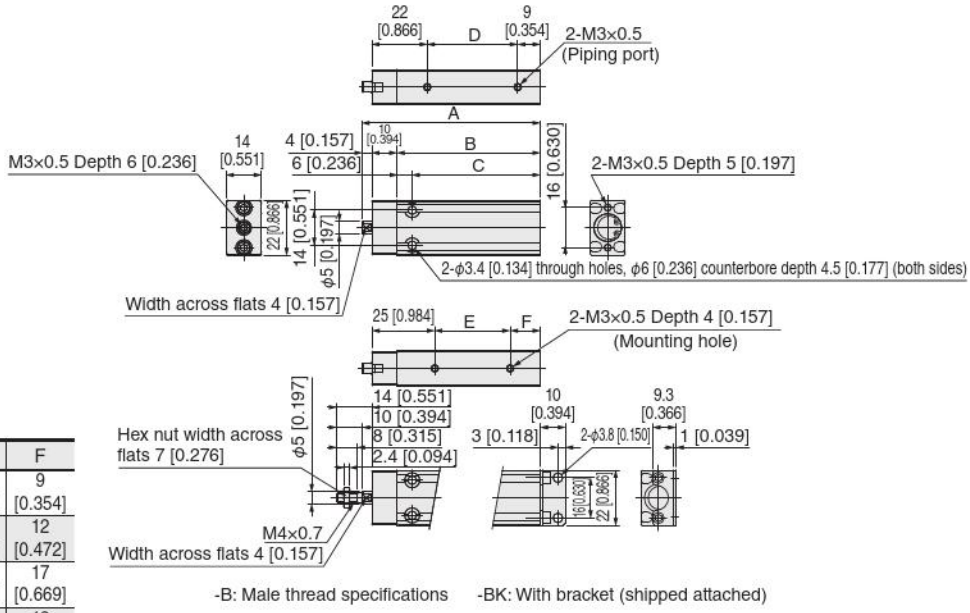

-B: Male thread specifications -BK: With bracket (shipped attached)

Stroke	A	B	C	D	E	F
5	46 [1.811]	32 [1.260]	26 [1.024]	11 [0.433]	8 [0.315]	9 [0.354]
10	51 [2.008]	37 [1.457]	31 [1.220]	16 [0.630]	10 [0.394]	12 [0.472]
15	56 [2.205]	42 [1.654]	36 [1.417]	21 [0.827]	10 [0.394]	17 [0.669]
20	61 [2.402]	47 [1.850]	41 [1.614]	26 [1.024]	20 [0.787]	12 [0.472]
25	66 [2.598]	52 [2.047]	46 [1.811]	31 [1.220]	20 [0.787]	17 [0.669]
30	71 [2.795]	57 [2.244]	51 [2.008]	36 [1.417]	30 [1.181]	12 [0.472]

Note: This product cannot use reed switch type sensor switches.

● BCY12 (scraper specification)

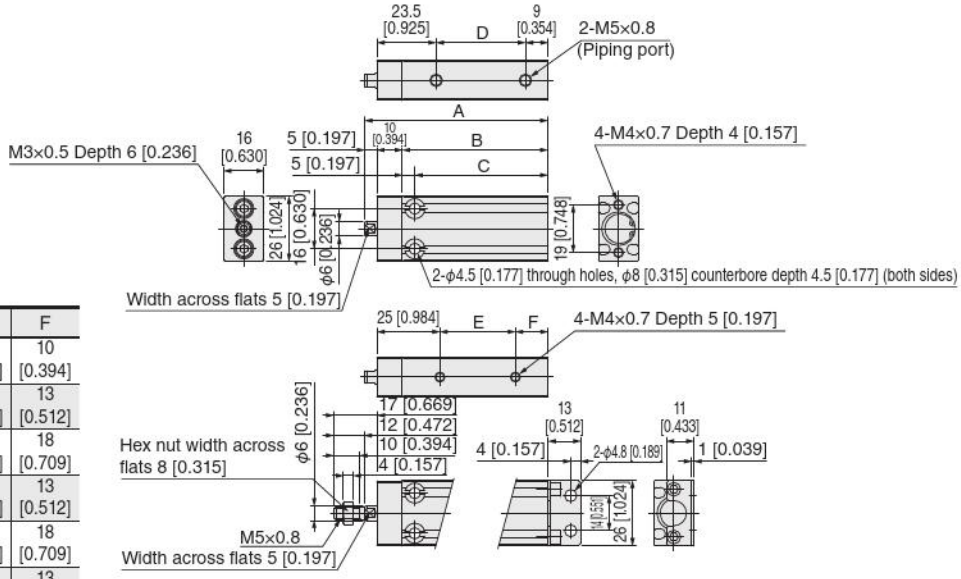

-B: Male thread specifications -BK: With bracket (shipped attached)

Stroke	A	B	C	D	E	F
5	48 [1.890]	33 [1.299]	28 [1.102]	10.5 [0.413]	8 [0.315]	10 [0.394]
10	53 [2.087]	38 [1.496]	33 [1.299]	15.5 [0.610]	10 [0.394]	13 [0.512]
15	58 [2.283]	43 [1.693]	38 [1.496]	20.5 [0.807]	10 [0.394]	18 [0.709]
20	63 [2.480]	48 [1.890]	43 [1.693]	25.5 [1.004]	20 [0.787]	13 [0.512]
25	68 [2.677]	53 [2.087]	48 [1.890]	30.5 [1.201]	20 [0.787]	18 [0.709]
30	73 [2.874]	58 [2.283]	53 [2.087]	35.5 [1.398]	30 [1.181]	13 [0.512]
35	78 [3.071]	63 [2.480]	58 [2.283]	40.5 [1.594]	30 [1.181]	18 [0.709]
40	83 [3.268]	68 [2.677]	63 [2.480]	45.5 [1.791]	40 [1.575]	13 [0.512]
45	88 [3.465]	73 [2.874]	68 [2.677]	50.5 [1.988]	40 [1.575]	18 [0.709]
50	93 [3.661]	78 [3.071]	73 [2.874]	55.5 [2.185]	50 [1.969]	13 [0.512]

Note: This product cannot use reed switch type sensor switches.

Double acting type dimensions (mm [in.])

● BCY16 (scraper specification)

Stroke	A	B	C	D	E	F
5	50 [1.969]	35 [1.378]	30 [1.181]	10.5 [0.413]	10 [0.394]	10 [0.394]
10	55 [2.165]	40 [1.575]	35 [1.378]	15.5 [0.610]	10 [0.394]	15 [0.591]
15	60 [2.362]	45 [1.772]	40 [1.575]	20.5 [0.807]	10 [0.394]	20 [0.787]
20	65 [2.559]	50 [1.969]	45 [1.772]	25.5 [1.004]	20 [0.787]	15 [0.591]
25	70 [2.756]	55 [2.165]	50 [1.969]	30.5 [1.201]	20 [0.787]	20 [0.787]
30	75 [2.953]	60 [2.362]	55 [2.165]	35.5 [1.398]	30 [1.181]	15 [0.591]
35	80 [3.150]	65 [2.559]	60 [2.362]	40.5 [1.594]	30 [1.181]	20 [0.787]
40	85 [3.346]	70 [2.756]	65 [2.559]	45.5 [1.791]	40 [1.575]	15 [0.591]
45	90 [3.543]	75 [2.953]	70 [2.756]	50.5 [1.988]	40 [1.575]	20 [0.787]
50	95 [3.740]	80 [3.150]	75 [2.953]	55.5 [2.185]	50 [1.969]	15 [0.591]

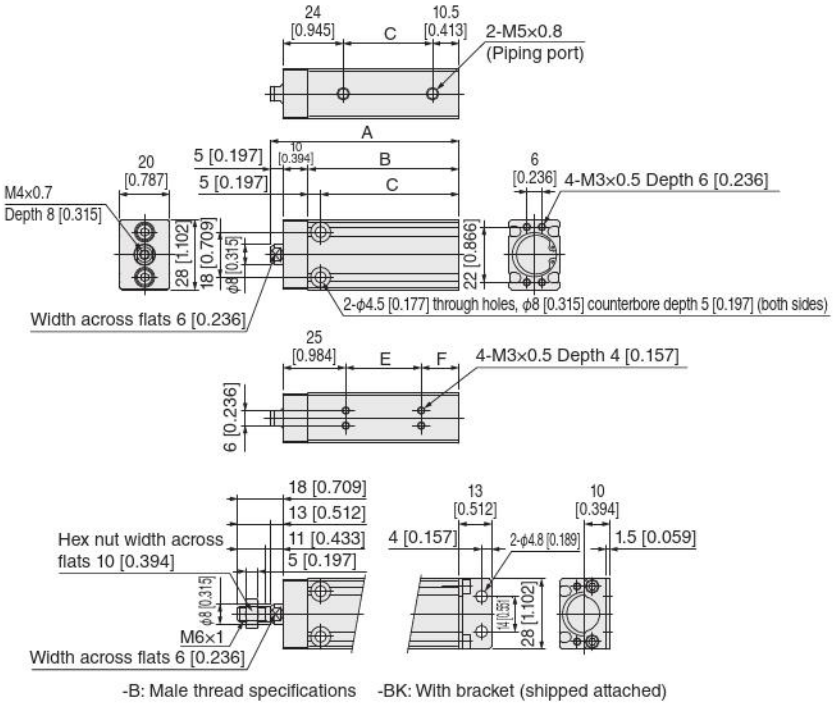

● BCY20 (scraper specification)

Stroke	A	B	C	D	E	F
5	60 [2.362]	44 [1.732]	38 [1.496]	16 [0.630]	10 [0.394]	19 [0.748]
10						
15	65 [2.559]	49 [1.929]	43 [1.693]	21 [0.827]	10 [0.394]	24 [0.945]
20	70 [2.756]	54 [2.126]	48 [1.890]	26 [1.024]	20 [0.787]	19 [0.748]
25	75 [2.953]	59 [2.323]	53 [2.087]	31 [1.220]	20 [0.787]	24 [0.945]
30	80 [3.150]	64 [2.520]	58 [2.283]	36 [1.417]	30 [1.181]	19 [0.748]
35	85 [3.346]	69 [2.717]	63 [2.480]	41 [1.614]	30 [1.181]	24 [0.945]
40	90 [3.543]	74 [2.913]	68 [2.677]	46 [1.811]	40 [1.575]	19 [0.748]
45	95 [3.740]	79 [3.110]	73 [2.874]	51 [2.008]	40 [1.575]	24 [0.945]
50	100 [3.937]	84 [3.307]	78 [3.071]	56 [2.205]	50 [1.969]	19 [0.748]
55	105 [4.134]	89 [3.504]	83 [3.268]	61 [2.402]	50 [1.969]	24 [0.945]
60	110 [4.331]	94 [3.701]	88 [3.465]	66 [2.598]	50 [1.969]	29 [1.142]
70	120 [4.724]	104 [4.094]	98 [3.858]	76 [2.992]	70 [2.756]	19 [0.748]
75	125 [4.921]	109 [4.291]	103 [4.055]	81 [3.189]	70 [2.756]	24 [0.945]
80	130 [5.118]	114 [4.488]	108 [4.252]	86 [3.386]	70 [2.756]	29 [1.142]
90	140 [5.512]	124 [4.882]	118 [4.646]	96 [3.780]	90 [3.543]	19 [0.748]
100	150 [5.906]	134 [5.276]	128 [5.039]	106 [4.173]	90 [3.543]	29 [1.142]

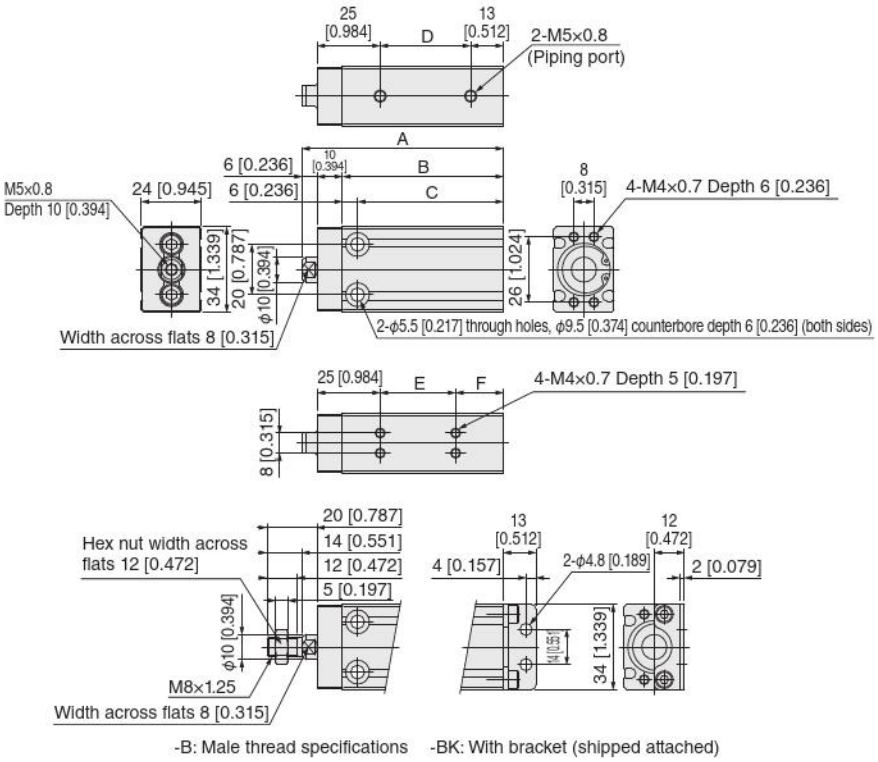

Note: 5-stroke models are available with collar insertion.

Double acting type dimensions (mm [in.])

● BCY25 (scraper specification)

Stroke	A	B	C	D	E	F
5 10	62 [2.441]	46 [1.811]	40 [1.575]	17 [0.669]	10 [0.394]	21 [0.827]
15	67 [2.638]	51 [2.008]	45 [1.772]	22 [0.866]	10 [0.394]	26 [1.024]
20	72 [2.835]	56 [2.205]	50 [1.969]	27 [1.063]	20 [0.787]	21 [0.827]
25	77 [3.031]	61 [2.402]	55 [2.165]	32 [1.260]	20 [0.787]	26 [1.024]
30	82 [3.228]	66 [2.598]	60 [2.362]	37 [1.457]	30 [1.181]	21 [0.827]
35	87 [3.425]	71 [2.795]	65 [2.559]	42 [1.654]	30 [1.181]	26 [1.024]
40	92 [3.622]	76 [2.992]	70 [2.756]	47 [1.850]	40 [1.575]	21 [0.827]
45	97 [3.819]	81 [3.189]	75 [2.953]	52 [2.047]	40 [1.575]	26 [1.024]
50	102 [4.016]	86 [3.386]	80 [3.150]	57 [2.244]	50 [1.969]	21 [0.827]
55	107 [4.213]	91 [3.583]	85 [3.346]	62 [2.441]	50 [1.969]	26 [1.024]
60	112 [4.409]	96 [3.780]	90 [3.543]	67 [2.638]	50 [1.969]	31 [1.220]
70	122 [4.803]	106 [4.173]	100 [3.937]	77 [3.031]	70 [2.756]	21 [0.827]
75	127 [5.000]	111 [4.370]	105 [4.134]	82 [3.228]	70 [2.756]	26 [1.024]
80	132 [5.197]	116 [4.567]	110 [4.331]	87 [3.425]	70 [2.756]	31 [1.220]
90	142 [5.591]	126 [4.961]	120 [4.724]	97 [3.819]	90 [3.543]	21 [0.827]
100	152 [5.984]	136 [5.354]	130 [5.118]	107 [4.213]	90 [3.543]	31 [1.220]

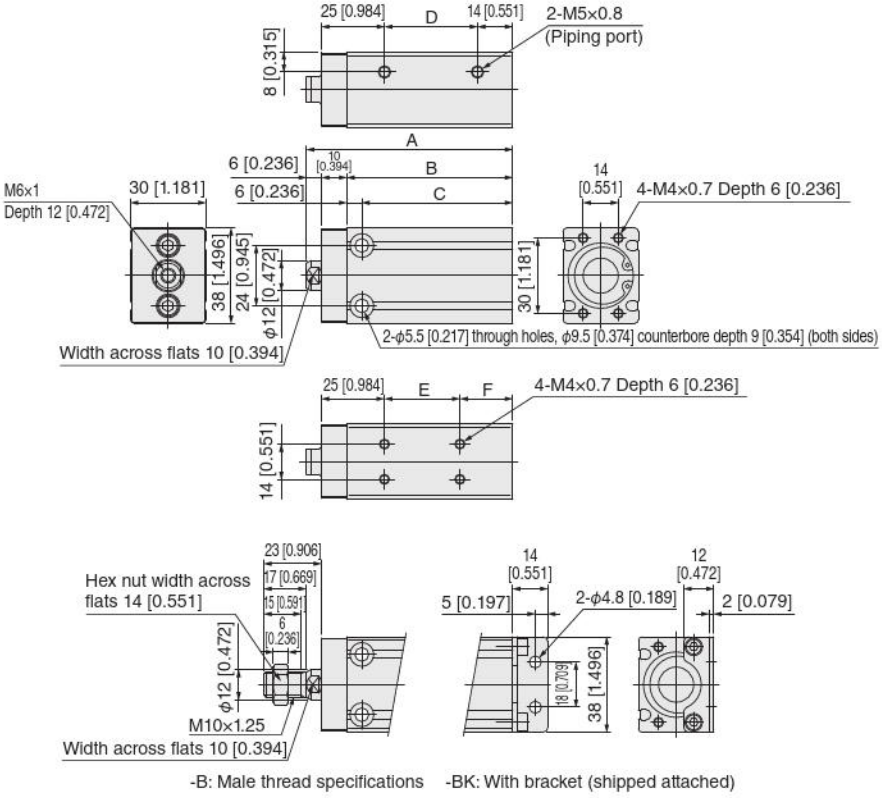

Note: 5-stroke models are available with collar insertion.

● BCY32 (scraper specification)

Stroke	A	B	C	D	E	F
10	72 [2.835]	50 [1.969]	43 [1.693]	16 [0.630]	10 [0.394]	20 [0.787]
15	77 [3.031]	55 [2.165]	48 [1.890]	21 [0.827]	10 [0.394]	25 [0.984]
20	82 [3.228]	60 [2.362]	53 [2.087]	26 [1.024]	20 [0.787]	20 [0.787]
25	87 [3.425]	65 [2.559]	58 [2.283]	31 [1.220]	20 [0.787]	25 [0.984]
30	92 [3.622]	70 [2.756]	63 [2.480]	36 [1.417]	30 [1.181]	20 [0.787]
35	97 [3.819]	75 [2.953]	68 [2.677]	41 [1.614]	30 [1.181]	25 [0.984]
40	102 [4.016]	80 [3.150]	73 [2.874]	46 [1.811]	40 [1.575]	20 [0.787]
45	107 [4.213]	85 [3.346]	78 [3.071]	51 [2.008]	40 [1.575]	25 [0.984]
50	112 [4.409]	90 [3.543]	83 [3.268]	56 [2.205]	50 [1.969]	20 [0.787]
55	117 [4.606]	95 [3.740]	88 [3.465]	61 [2.402]	50 [1.969]	25 [0.984]
60	122 [4.803]	100 [3.937]	93 [3.661]	66 [2.598]	50 [1.969]	30 [1.181]
70	132 [5.197]	110 [4.331]	103 [4.055]	76 [2.992]	70 [2.756]	20 [0.787]
75	137 [5.394]	115 [4.528]	108 [4.252]	81 [3.189]	70 [2.756]	25 [0.984]
80	142 [5.591]	120 [4.724]	113 [4.449]	86 [3.386]	80 [3.150]	20 [0.787]
90	152 [5.984]	130 [5.118]	123 [4.843]	96 [3.780]	80 [3.150]	30 [1.181]
100	162 [6.378]	140 [5.512]	133 [5.236]	106 [4.173]	100 [3.937]	20 [0.787]

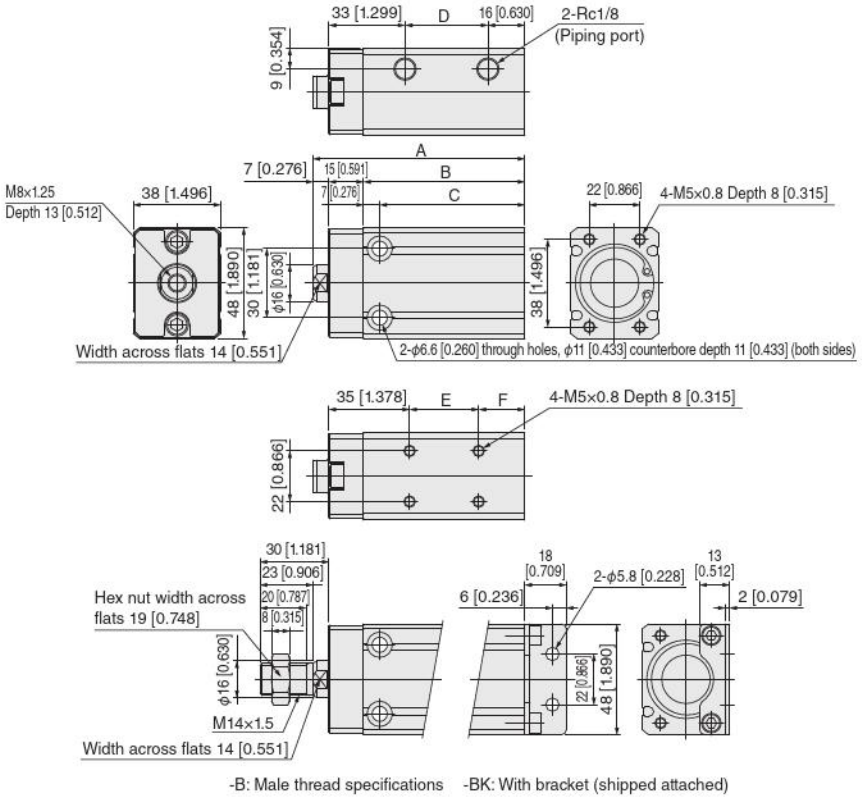

● BCY40 (scraper specification)

Stroke	A	B	C	D	E	F
10	79 [3.110]	57 [2.244]	48 [1.890]	17 [0.669]	15 [0.591]	27 [1.063]
15	84 [3.307]	62 [2.441]	53 [2.087]	22 [0.866]	15 [0.591]	32 [1.260]
20	89 [3.504]	67 [2.638]	58 [2.283]	27 [1.063]	20 [0.787]	27 [1.063]
25	94 [3.701]	72 [2.835]	63 [2.480]	32 [1.260]	20 [0.787]	32 [1.260]
30	99 [3.898]	77 [3.031]	68 [2.677]	37 [1.457]	30 [1.181]	27 [1.063]
35	104 [4.094]	82 [3.228]	73 [2.874]	42 [1.654]	30 [1.181]	32 [1.260]
40	109 [4.291]	87 [3.425]	78 [3.071]	47 [1.850]	40 [1.575]	27 [1.063]
45	114 [4.488]	92 [3.622]	83 [3.268]	52 [2.047]	40 [1.575]	32 [1.260]
50	119 [4.685]	97 [3.819]	88 [3.465]	57 [2.244]	50 [1.969]	27 [1.063]
55	124 [4.882]	102 [4.016]	93 [3.661]	62 [2.441]	50 [1.969]	32 [1.260]
60	129 [5.079]	107 [4.213]	98 [3.858]	67 [2.638]	60 [2.362]	27 [1.063]
70	139 [5.472]	117 [4.606]	108 [4.252]	77 [3.031]	70 [2.756]	27 [1.063]
75	144 [5.669]	122 [4.803]	113 [4.449]	82 [3.228]	70 [2.756]	32 [1.260]
80	149 [5.866]	127 [5.000]	118 [4.646]	87 [3.425]	80 [3.150]	27 [1.063]
90	159 [6.260]	137 [5.394]	128 [5.039]	97 [3.819]	80 [3.150]	37 [1.457]
100	169 [6.654]	147 [5.787]	138 [5.433]	107 [4.213]	100 [3.937]	27 [1.063]

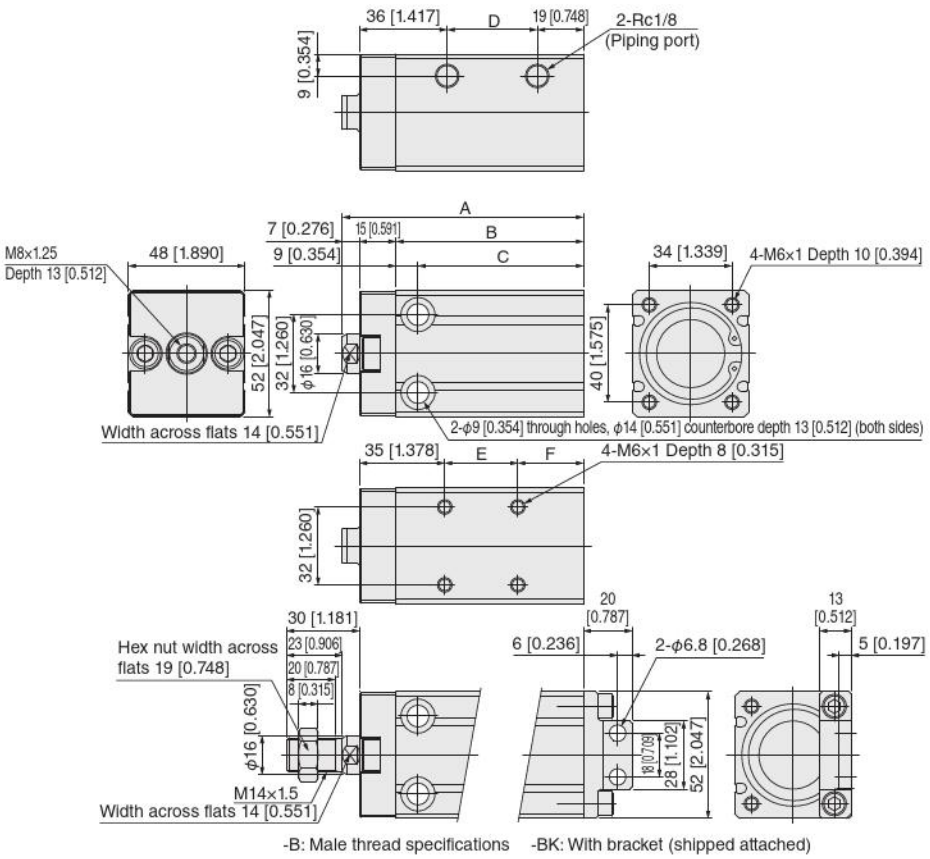

● BCY50 (scraper specification)

Stroke	A	B	C	D
10	86 [3.386]	63 [2.480]	52 [2.047]	18 [0.709]
15	91 [3.583]	68 [2.677]	57 [2.244]	23 [0.906]
20	96 [3.780]	73 [2.874]	62 [2.441]	28 [1.102]
25	101 [3.976]	78 [3.071]	67 [2.638]	33 [1.299]
30	106 [4.173]	83 [3.268]	72 [2.835]	38 [1.496]
35	111 [4.370]	88 [3.465]	77 [3.031]	43 [1.693]
40	116 [4.567]	93 [3.661]	82 [3.228]	48 [1.890]
45	121 [4.764]	98 [3.858]	87 [3.425]	53 [2.087]
50	126 [4.961]	103 [4.055]	92 [3.622]	58 [2.283]
55	131 [5.157]	108 [4.252]	97 [3.819]	63 [2.480]
60	136 [5.354]	113 [4.449]	102 [4.016]	68 [2.677]
70	146 [5.748]	123 [4.843]	112 [4.409]	78 [3.071]
75	151 [5.945]	128 [5.039]	117 [4.606]	83 [3.268]
80	156 [6.142]	133 [5.236]	122 [4.803]	88 [3.465]
90	166 [6.535]	143 [5.630]	132 [5.197]	98 [3.858]
100	176 [6.929]	153 [6.024]	142 [5.591]	108 [4.252]

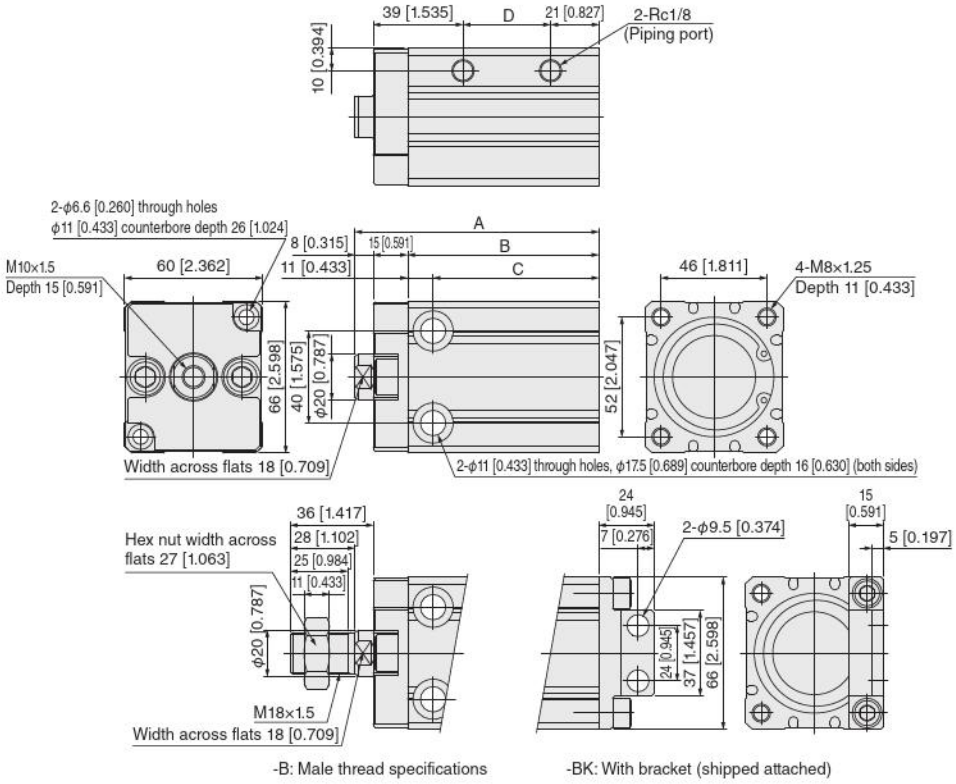

Double acting type dimensions (mm [in.])

● BCY63 (scraper specification)

Stroke	A	B	C	D
10	99 [3.898]	71 [2.795]	59 [2.323]	21 [0.827]
15	104 [4.094]	76 [2.992]	64 [2.520]	26 [1.024]
20	109 [4.291]	81 [3.189]	69 [2.717]	31 [1.220]
25	114 [4.488]	86 [3.386]	74 [2.913]	36 [1.417]
30	119 [4.685]	91 [3.583]	79 [3.110]	41 [1.614]
35	124 [4.882]	96 [3.780]	84 [3.307]	46 [1.811]
40	129 [5.079]	101 [3.976]	89 [3.504]	51 [2.008]
45	134 [5.276]	106 [4.173]	94 [3.701]	56 [2.205]
50	139 [5.472]	111 [4.370]	99 [3.898]	61 [2.402]
55	144 [5.669]	116 [4.567]	104 [4.094]	66 [2.598]
60	149 [5.866]	121 [4.764]	109 [4.291]	71 [2.795]
70	159 [6.260]	131 [5.157]	119 [4.685]	81 [3.189]
75	164 [6.457]	136 [5.354]	124 [4.882]	86 [3.386]
80	169 [6.654]	141 [5.551]	129 [5.079]	91 [3.583]
90	179 [7.047]	151 [5.945]	139 [5.472]	101 [3.976]
100	189 [7.441]	161 [6.339]	149 [5.866]	111 [4.370]

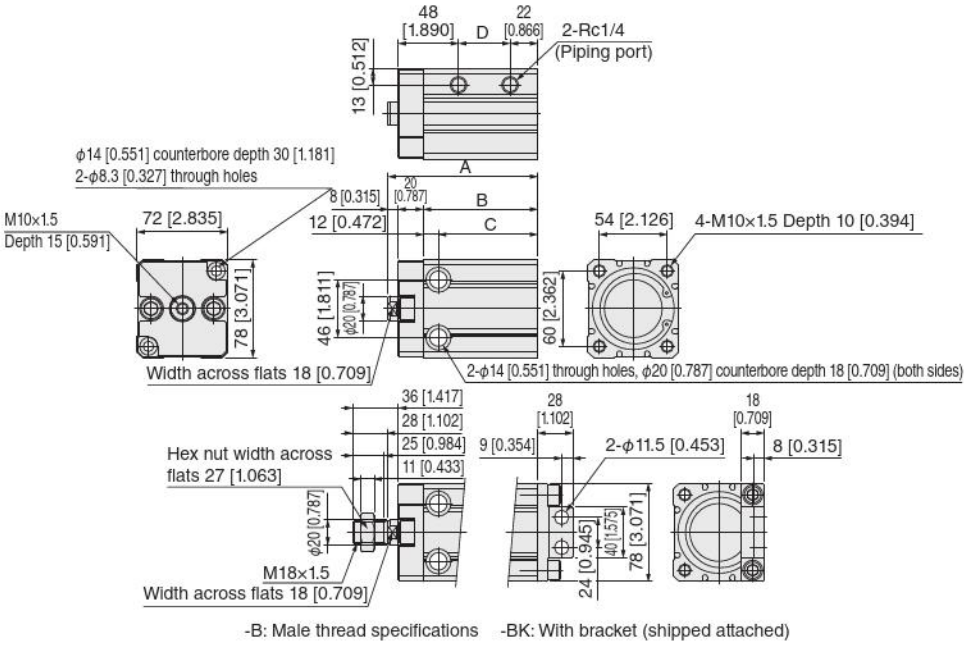

● BCY80 (scraper specification)

Stroke	A	B	C	D
10	104 [4.094]	74 [2.913]	62 [2.441]	24 [0.945]
15	109 [4.291]	79 [3.110]	67 [2.638]	29 [1.142]
20	114 [4.488]	84 [3.307]	72 [2.835]	34 [1.339]
25	119 [4.685]	89 [3.504]	77 [3.031]	39 [1.535]
30	124 [4.882]	94 [3.701]	82 [3.228]	44 [1.732]
35	129 [5.079]	99 [3.898]	87 [3.425]	49 [1.929]
40	134 [5.276]	104 [4.094]	92 [3.622]	54 [2.126]
45	139 [5.472]	109 [4.291]	97 [3.819]	59 [2.323]
50	144 [5.669]	114 [4.488]	102 [4.016]	64 [2.520]
55	149 [5.866]	119 [4.685]	107 [4.213]	69 [2.717]
60	154 [6.063]	124 [4.882]	112 [4.409]	74 [2.913]
70	164 [6.457]	134 [5.276]	122 [4.803]	84 [3.307]
75	169 [6.654]	139 [5.472]	127 [5.000]	89 [3.504]
80	174 [6.850]	144 [5.669]	132 [5.197]	94 [3.701]
90	184 [7.244]	154 [6.063]	142 [5.591]	104 [4.094]
100	194 [7.638]	164 [6.457]	152 [5.984]	114 [4.488]

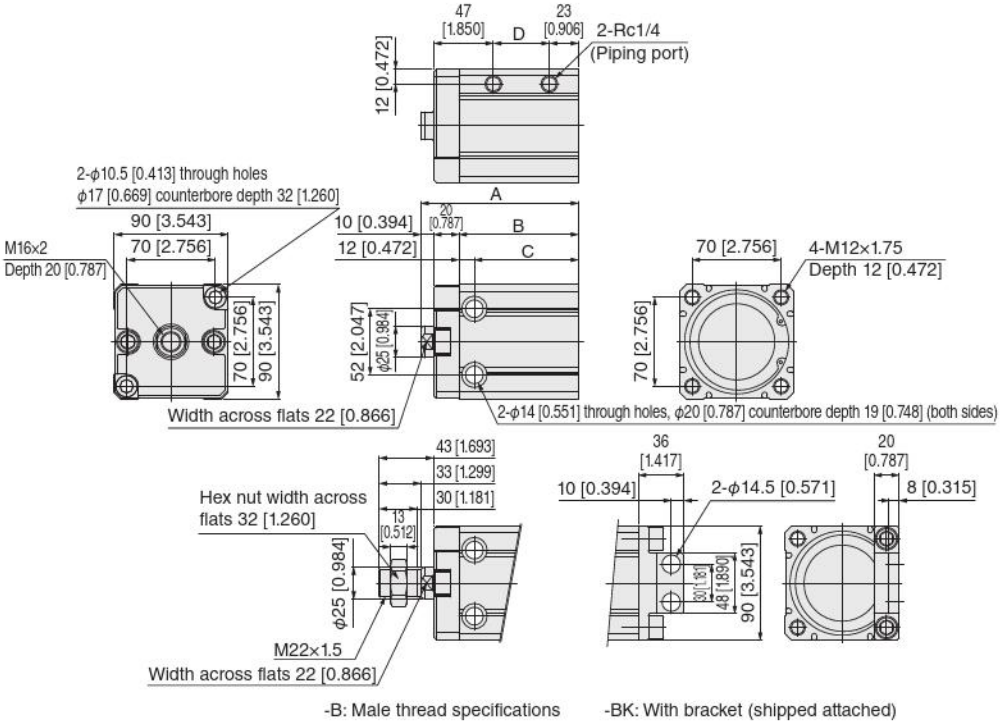

Double acting type dimensions (mm [in.])

● BCY100 (scraper specification)

Stroke	A	B	C	D
10	122 [4.803]	90 [3.543]	74 [2.913]	27 [1.063]
15	127 [5.000]	95 [3.740]	79 [3.110]	32 [1.260]
20	132 [5.197]	100 [3.937]	84 [3.307]	37 [1.457]
25	137 [5.394]	105 [4.134]	89 [3.504]	42 [1.654]
30	142 [5.591]	110 [4.331]	94 [3.701]	47 [1.850]
35	147 [5.787]	115 [4.528]	99 [3.898]	52 [2.047]
40	152 [5.984]	120 [4.724]	104 [4.094]	57 [2.244]
45	157 [6.181]	125 [4.921]	109 [4.291]	62 [2.441]
50	162 [6.378]	130 [5.118]	114 [4.488]	67 [2.638]
55	167 [6.575]	135 [5.315]	119 [4.685]	72 [2.835]
60	172 [6.772]	140 [5.512]	124 [4.882]	77 [3.031]
70	182 [7.165]	150 [5.906]	134 [5.276]	87 [3.425]
75	187 [7.362]	155 [6.102]	139 [5.472]	92 [3.622]
80	192 [7.559]	160 [6.299]	144 [5.669]	97 [3.819]
90	202 [7.953]	170 [6.693]	154 [6.063]	107 [4.213]
100	212 [8.346]	180 [7.087]	164 [6.457]	117 [4.606]

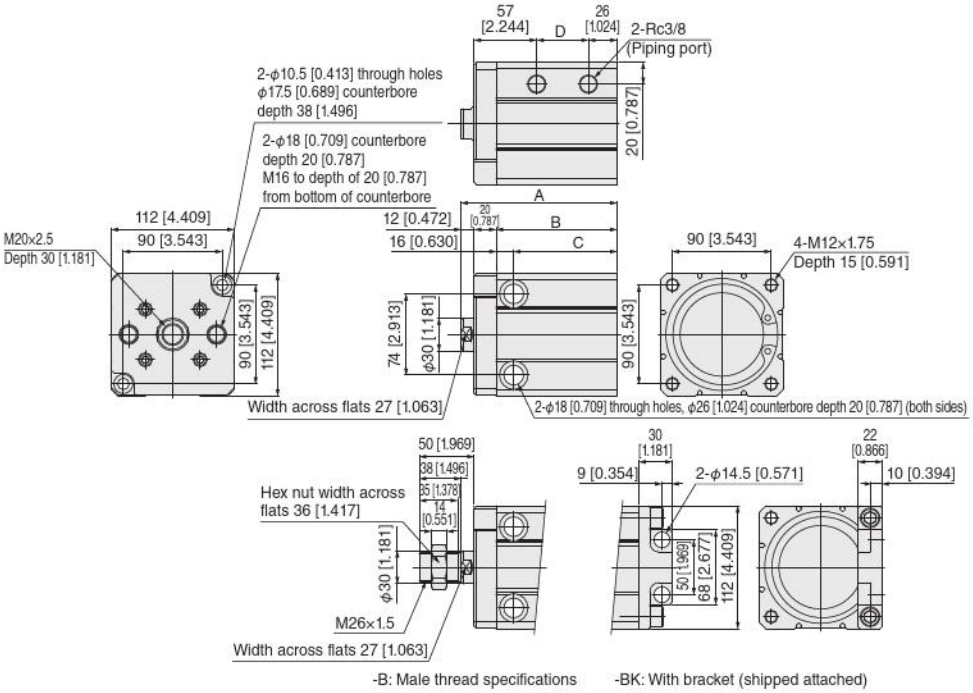

● BCY125 (scraper specification)

Stroke	A	B	C	D
10	134 [5.276]	98 [3.858]	78 [3.071]	26 [1.024]
15	139 [5.472]	103 [4.055]	83 [3.268]	31 [1.220]
20	144 [5.669]	108 [4.252]	88 [3.465]	36 [1.417]
25	149 [5.866]	113 [4.449]	93 [3.661]	41 [1.614]
30	154 [6.063]	118 [4.646]	98 [3.858]	46 [1.811]
35	159 [6.260]	123 [4.843]	103 [4.055]	51 [2.008]
40	164 [6.457]	128 [5.039]	108 [4.252]	56 [2.205]
45	169 [6.654]	133 [5.236]	113 [4.449]	61 [2.402]
50	174 [6.850]	138 [5.433]	118 [4.646]	66 [2.598]
55	179 [7.047]	143 [5.630]	123 [4.843]	71 [2.795]
60	184 [7.244]	148 [5.827]	128 [5.039]	76 [2.992]
70	194 [7.638]	158 [6.220]	138 [5.433]	86 [3.386]
75	199 [7.835]	163 [6.417]	143 [5.630]	91 [3.583]
80	204 [8.031]	168 [6.614]	148 [5.827]	96 [3.780]
90	214 [8.425]	178 [7.008]	158 [6.220]	106 [4.173]
100	224 [8.819]	188 [7.402]	168 [6.614]	116 [4.567]

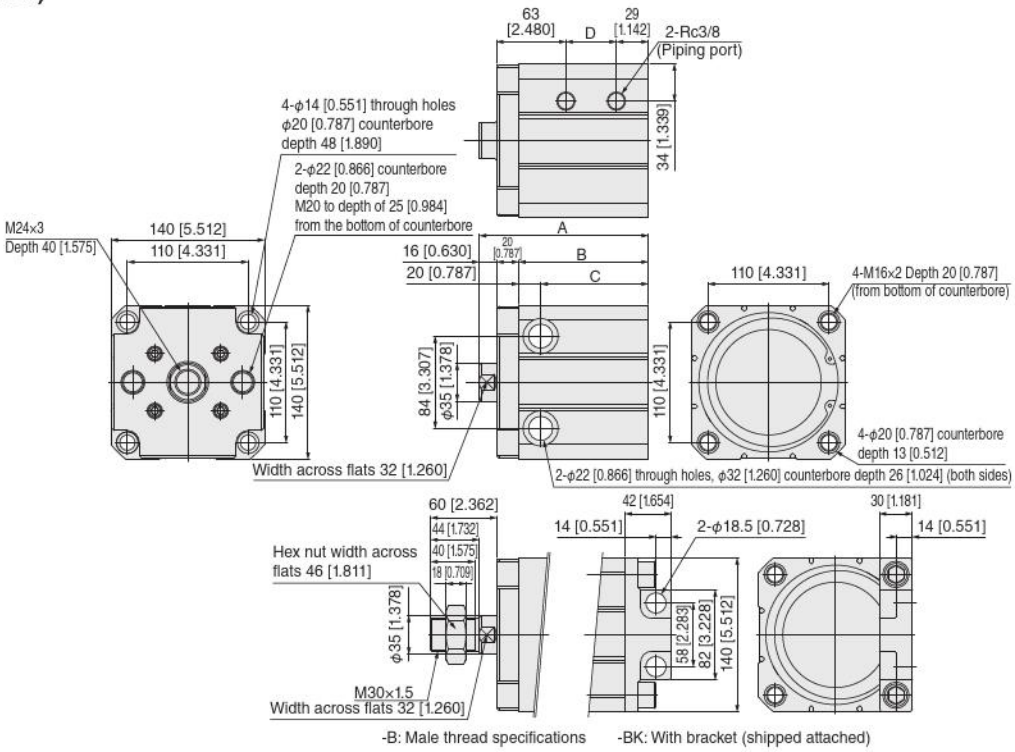

Single acting push type dimensions (mm [in.])

●BCSA6
●BCSAR6 (corrosion resistant specification)

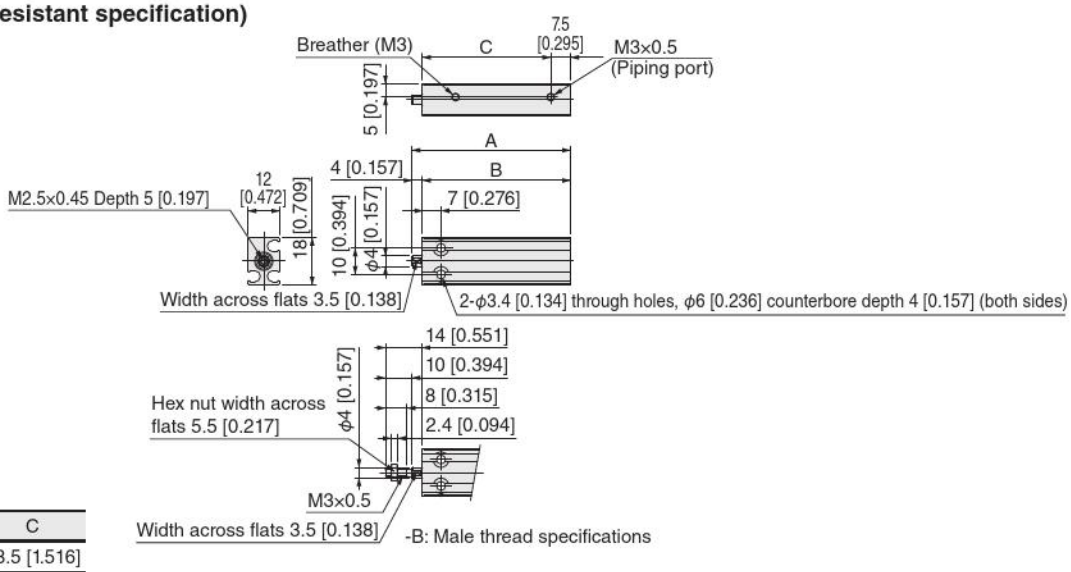

Stroke	A	B	C
5	50 [1.969]	46 [1.811]	38.5 [1.516]
10	55 [2.165]	51 [2.008]	43.5 [1.713]
15	60 [2.362]	56 [2.205]	48.5 [1.909]

Note: This product cannot use reed switch type sensor switches.

●BCSA8
●BCSAR8 (corrosion resistant specification)

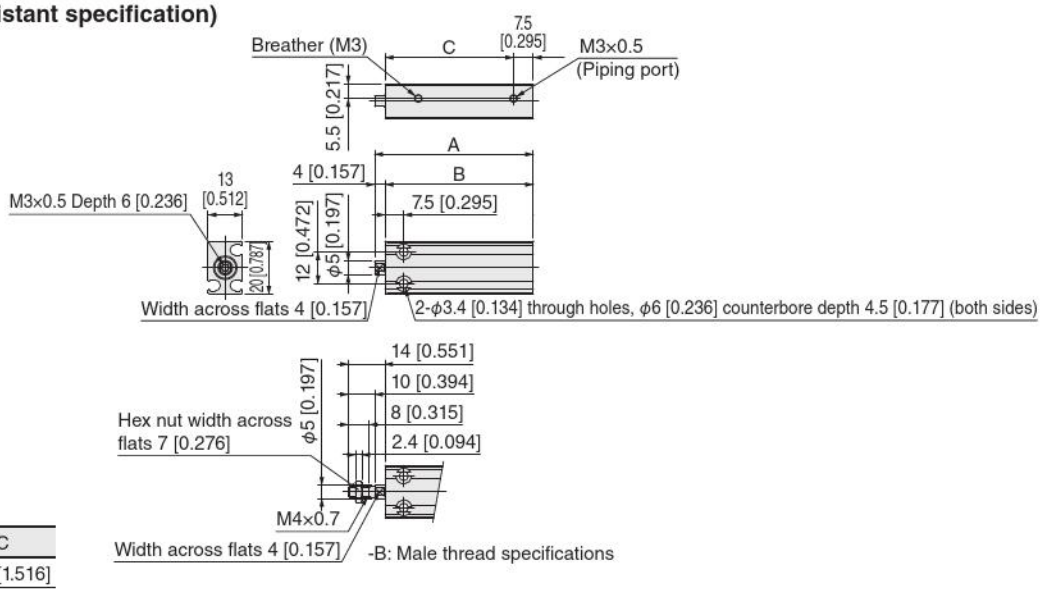

Stroke	A	B	C
5	50 [1.969]	46 [1.811]	38.5 [1.516]
10	55 [2.165]	51 [2.008]	43.5 [1.713]
15	60 [2.362]	56 [2.205]	48.5 [1.909]

Note: This product cannot use reed switch type sensor switches.

●BCSA10
●BCSAR10 (corrosion resistant specification)

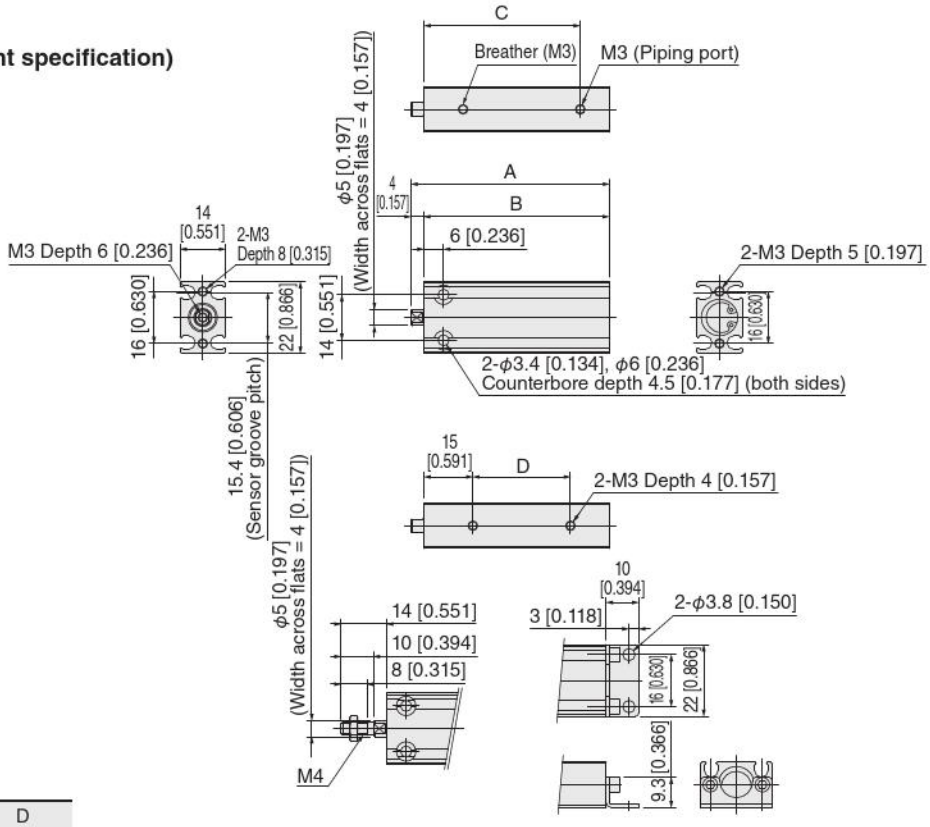

-B: Male thread specifications -BK: With bracket (shipped attached)

Stroke	A	B	C	D
5	51 [2.008]	47 [1.850]	38 [1.496]	20 [0.787]
10	56 [2.205]	52 [2.047]	43 [1.693]	20 [0.787]
15	61 [2.402]	57 [2.244]	48 [1.890]	30 [1.181]

Note: This product cannot use reed switch type sensor switches.

●BCSA12
●BCSAR12 (corrosion resistant specification)

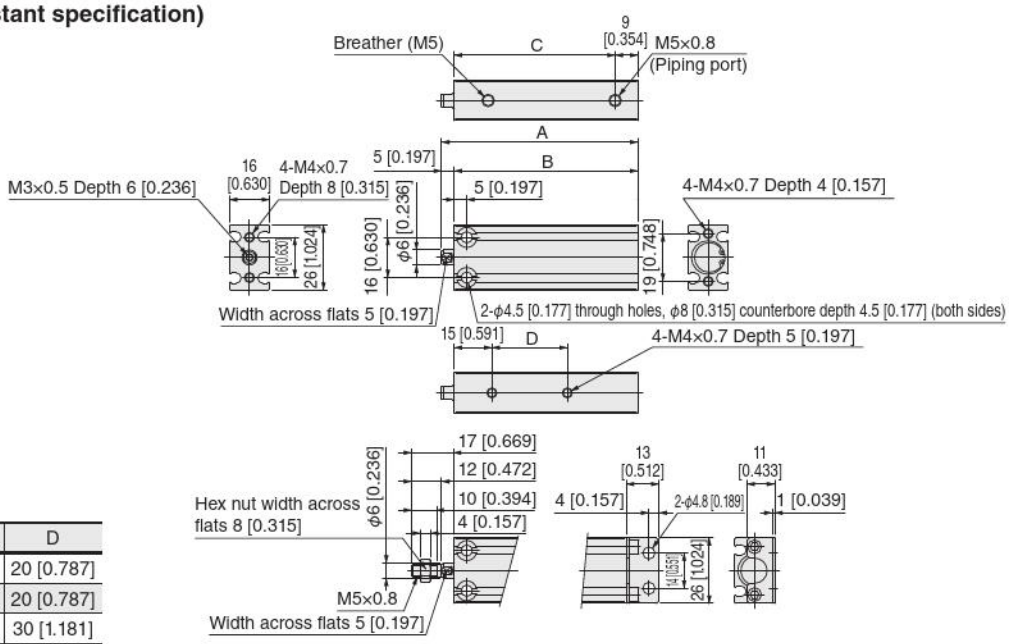

-B: Male thread specifications -BK: With bracket (shipped attached)

Stroke	A	B	C	D
5	53 [2.087]	48 [1.890]	39 [1.535]	20 [0.787]
10	58 [2.283]	53 [2.087]	44 [1.732]	20 [0.787]
15	63 [2.480]	58 [2.283]	49 [1.929]	30 [1.181]
20	68 [2.677]	63 [2.480]	54 [2.126]	30 [1.181]
25	73 [2.874]	68 [2.677]	59 [2.323]	40 [1.575]
30	78 [3.071]	73 [2.874]	64 [2.520]	40 [1.575]

Note: This product cannot use reed switch type sensor switches.

●BCSA16
●BCSAR16 (corrosion resistant specification)

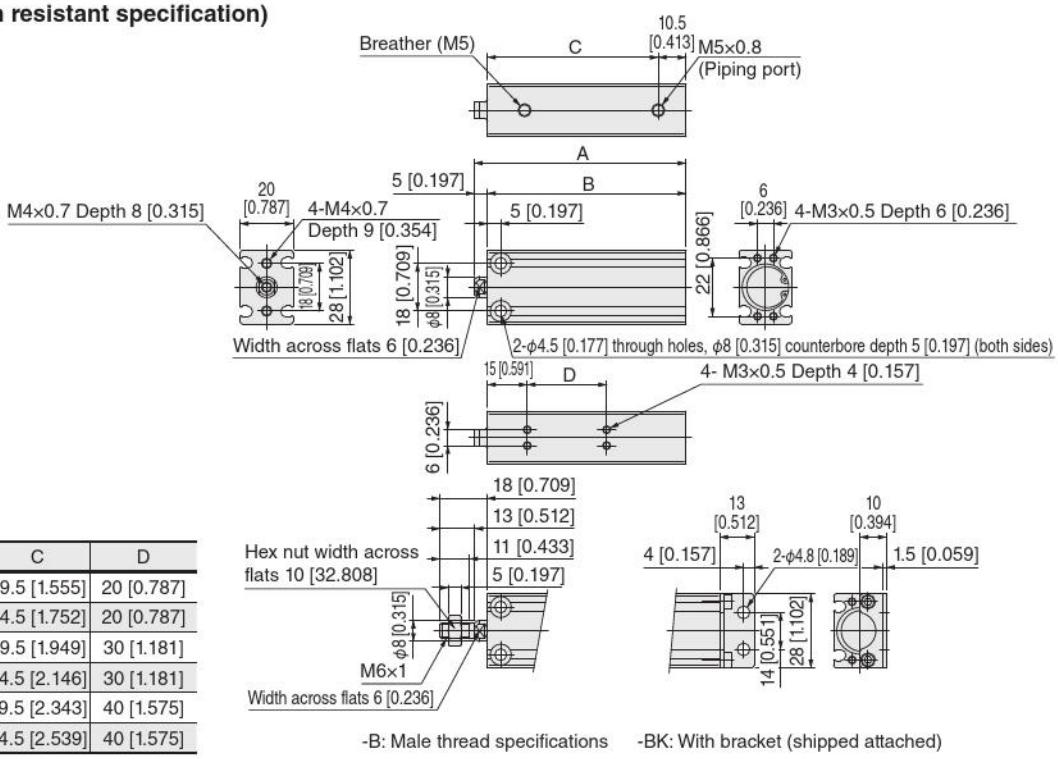

-B: Male thread specifications -BK: With bracket (shipped attached)

Stroke	A	B	C	D
5	55 [2.165]	50 [1.969]	39.5 [1.555]	20 [0.787]
10	60 [2.362]	55 [2.165]	44.5 [1.752]	20 [0.787]
15	65 [2.559]	60 [2.362]	49.5 [1.949]	30 [1.181]
20	70 [2.756]	65 [2.559]	54.5 [2.146]	30 [1.181]
25	75 [2.953]	70 [2.756]	59.5 [2.343]	40 [1.575]
30	80 [3.150]	75 [2.953]	64.5 [2.539]	40 [1.575]

●BCSA20
●BCSAR20 (corrosion resistant specification)

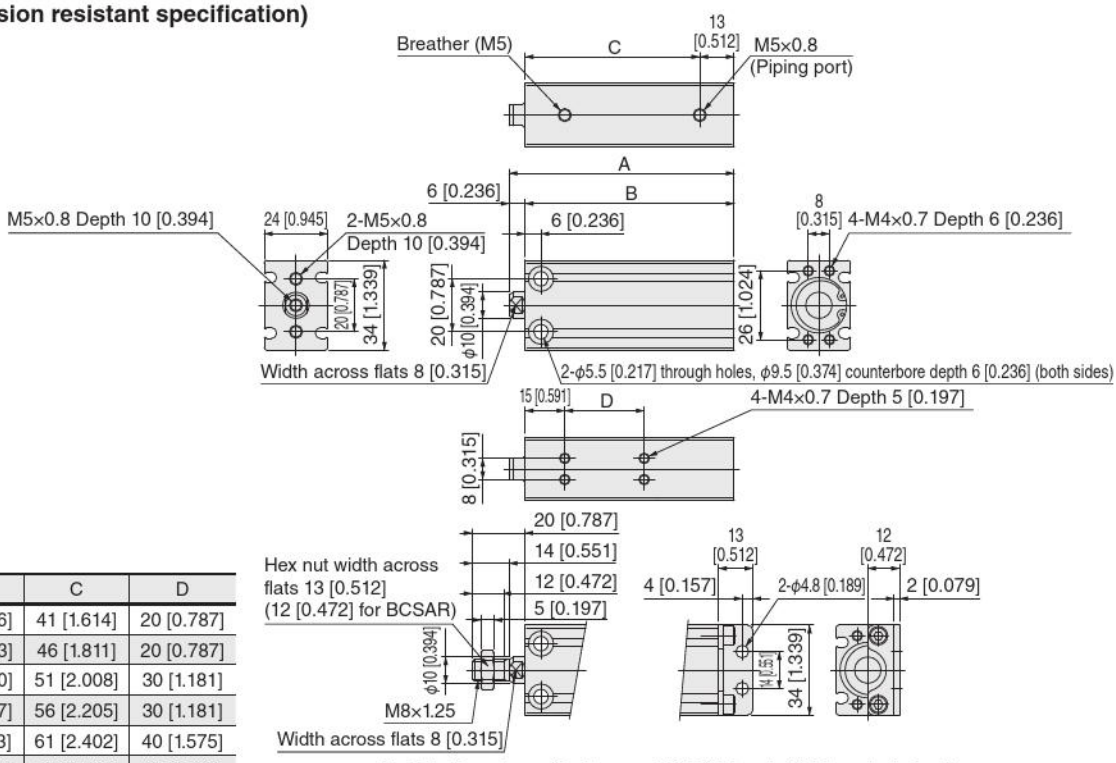

-B: Male thread specifications -BK: With bracket (shipped attached)

Stroke	A	B	C	D
5	60 [2.362]	54 [2.126]	41 [1.614]	20 [0.787]
10	65 [2.559]	59 [2.323]	46 [1.811]	20 [0.787]
15	70 [2.756]	64 [2.520]	51 [2.008]	30 [1.181]
20	75 [2.953]	69 [2.717]	56 [2.205]	30 [1.181]
25	80 [3.150]	74 [2.913]	61 [2.402]	40 [1.575]
30	85 [3.346]	79 [3.110]	66 [2.598]	40 [1.575]

●BCSA25
●BCSAR25 (corrosion resistant specification)

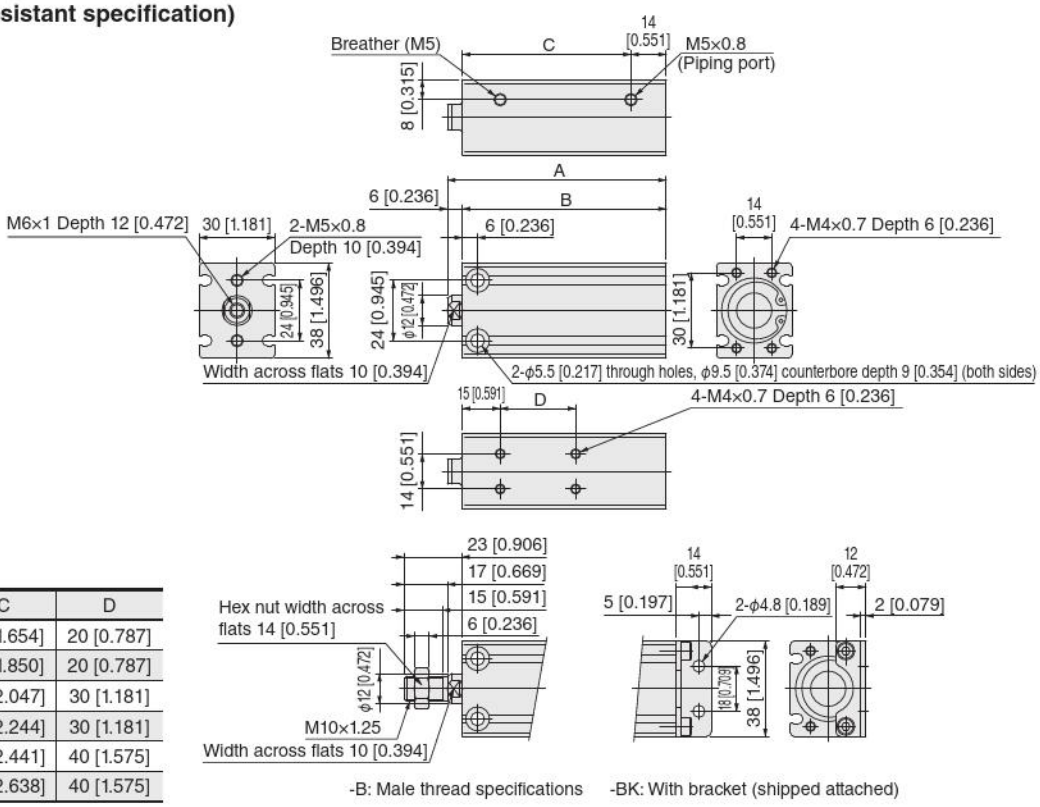

-B: Male thread specifications -BK: With bracket (shipped attached)

Stroke	A	B	C	D
5	62 [2.441]	56 [2.205]	42 [1.654]	20 [0.787]
10	67 [2.638]	61 [2.402]	47 [1.850]	20 [0.787]
15	72 [2.835]	66 [2.598]	52 [2.047]	30 [1.181]
20	77 [3.031]	71 [2.795]	57 [2.244]	30 [1.181]
25	82 [3.228]	76 [2.992]	62 [2.441]	40 [1.575]
30	87 [3.425]	81 [3.189]	67 [2.638]	40 [1.575]

●BCSA32
●BCSAR32 (corrosion resistant specification)

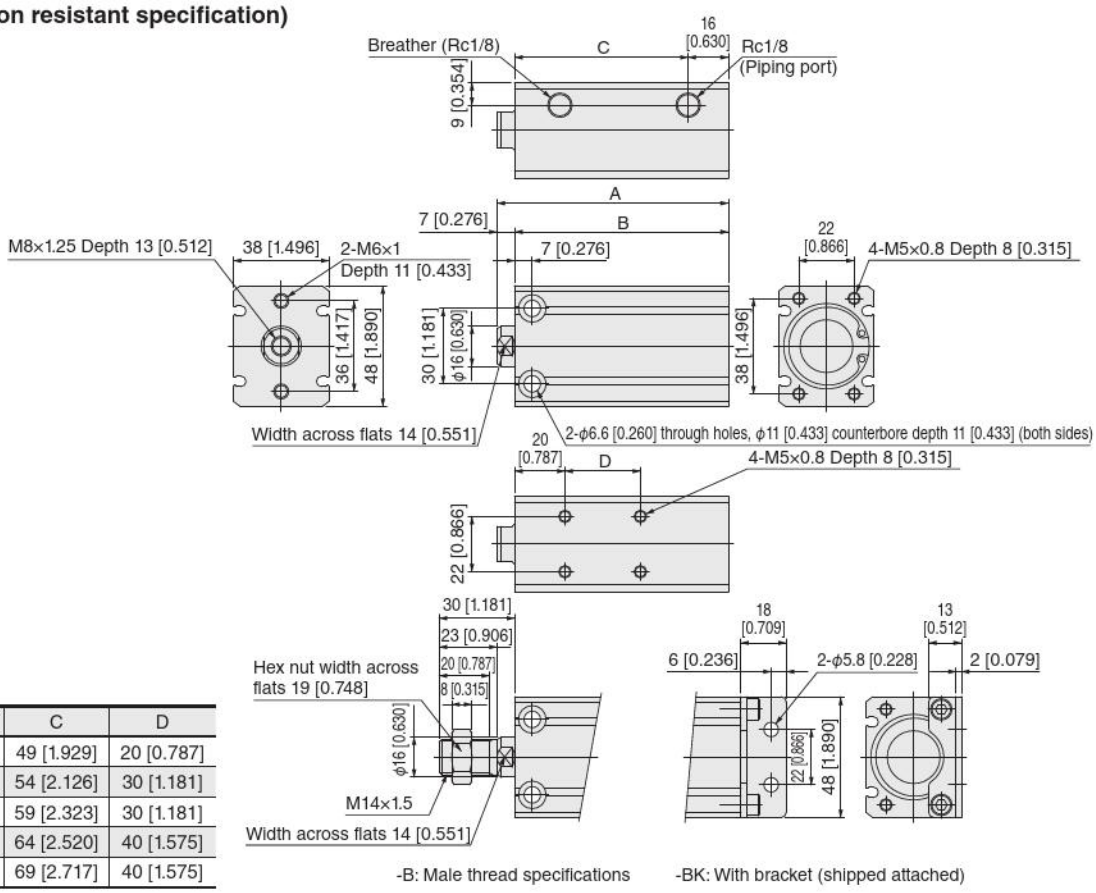

-B: Male thread specifications -BK: With bracket (shipped attached)

Stroke	A	B	C	D
10	72 [2.835]	65 [2.559]	49 [1.929]	20 [0.787]
15	77 [3.031]	70 [2.756]	54 [2.126]	30 [1.181]
20	82 [3.228]	75 [2.953]	59 [2.323]	30 [1.181]
25	87 [3.425]	80 [3.150]	64 [2.520]	40 [1.575]
30	92 [3.622]	85 [3.346]	69 [2.717]	40 [1.575]

Single acting push type dimensions (mm [in.])

●BCSA40
●BCSAR40 (corrosion resistant specification)

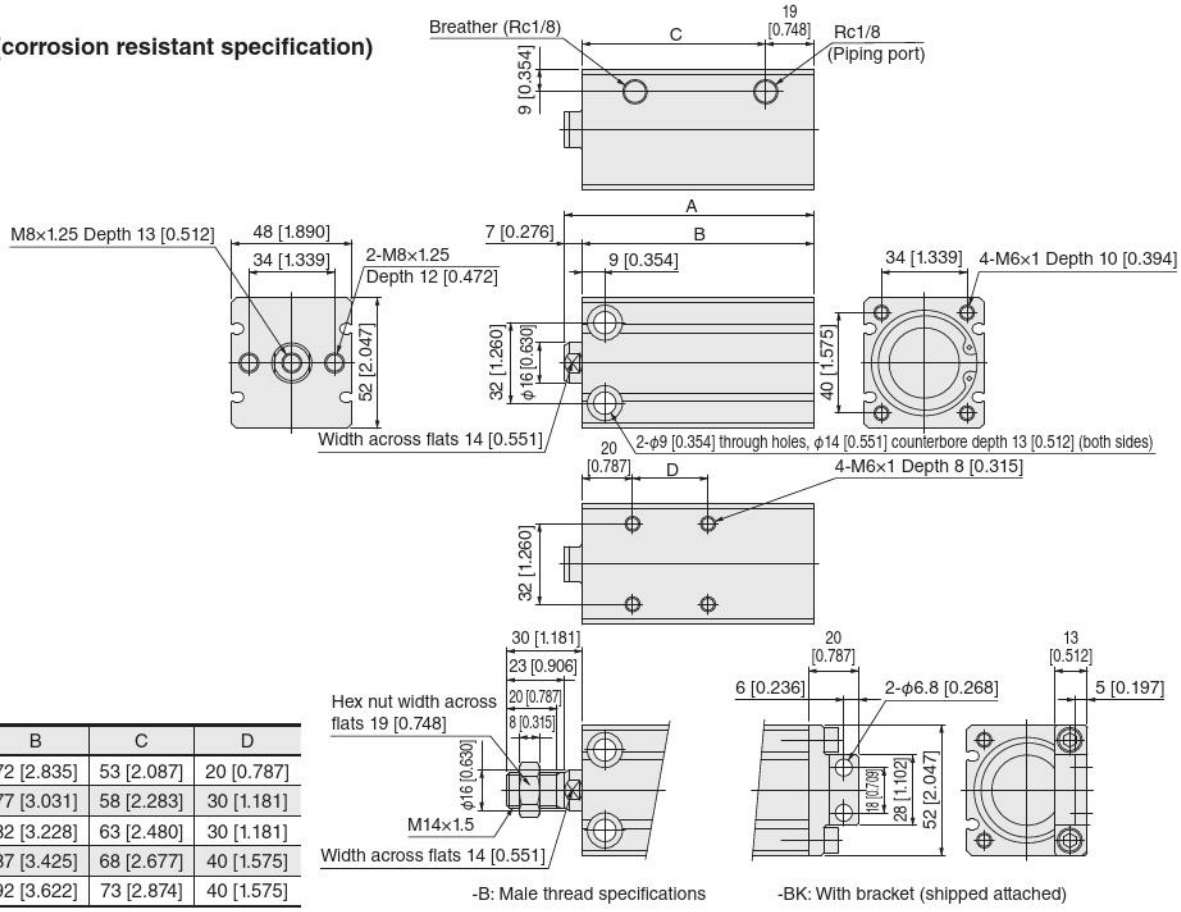

Stroke	A	B	C	D
10	79 [3.110]	72 [2.835]	53 [2.087]	20 [0.787]
15	84 [3.307]	77 [3.031]	58 [2.283]	30 [1.181]
20	89 [3.504]	82 [3.228]	63 [2.480]	30 [1.181]
25	94 [3.701]	87 [3.425]	68 [2.677]	40 [1.575]
30	99 [3.898]	92 [3.622]	73 [2.874]	40 [1.575]

●BCSA50
●BCSAR50 (corrosion resistant specification)

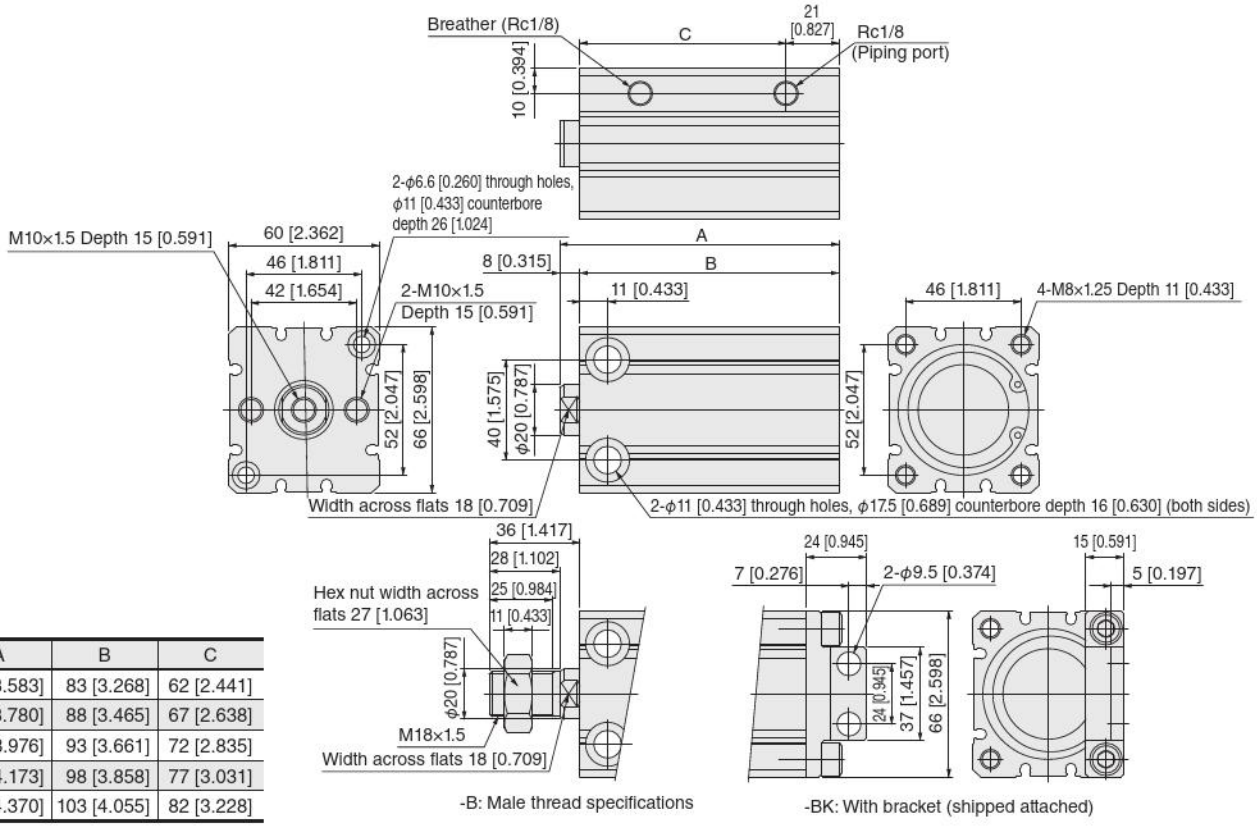

Stroke	A	B	C
10	91 [3.583]	83 [3.268]	62 [2.441]
15	96 [3.780]	88 [3.465]	67 [2.638]
20	101 [3.976]	93 [3.661]	72 [2.835]
25	106 [4.173]	98 [3.858]	77 [3.031]
30	111 [4.370]	103 [4.055]	82 [3.228]

Single acting pull type dimensions (mm [in.])

●BCTA6
●BCTAR6 (corrosion resistant specification)

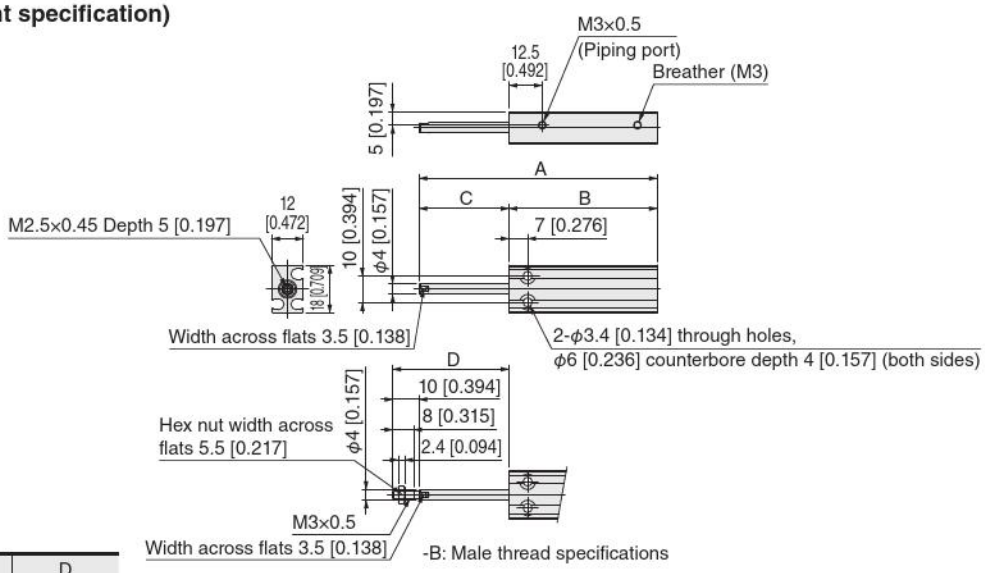

Stroke	A	B	C	D
5	55 [2.165]	46 [1.811]	9 [0.354]	19 [0.748]
10	65 [2.559]	51 [2.008]	14 [0.551]	24 [0.945]
15	75 [2.953]	56 [2.205]	19 [0.748]	29 [1.142]

Note: This product cannot use reed switch type sensor switches.

●BCTA8
●BCTAR8 (corrosion resistant specification)

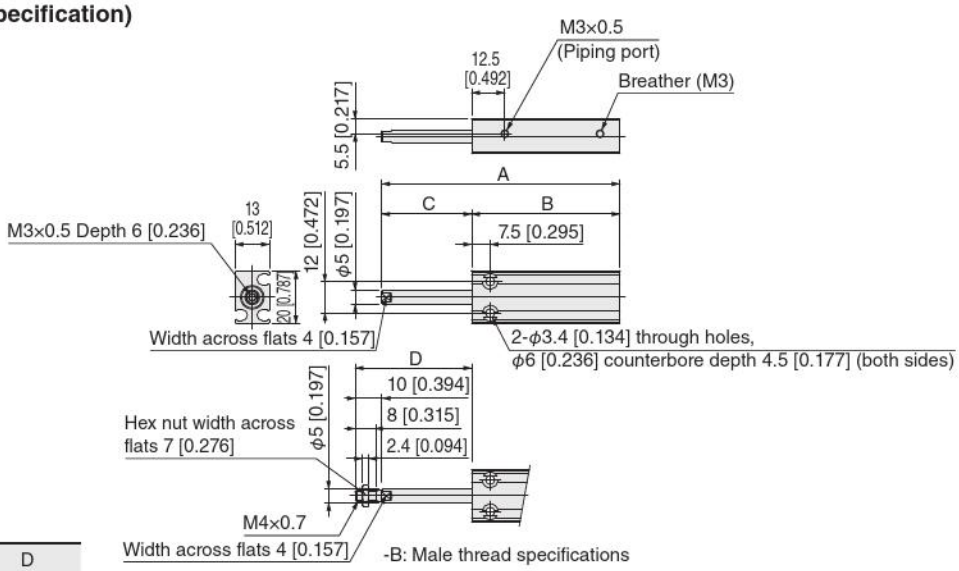

Stroke	A	B	C	D
5	55 [2.165]	46 [1.811]	9 [0.354]	19 [0.748]
10	65 [2.559]	51 [2.008]	14 [0.551]	24 [0.945]
15	75 [2.953]	56 [2.205]	19 [0.748]	29 [1.142]

Note: This product cannot use reed switch type sensor switches.

Single acting pull type dimensions (mm [in.])

●BCTA10
●BCTAR10 (corrosion resistant specification)

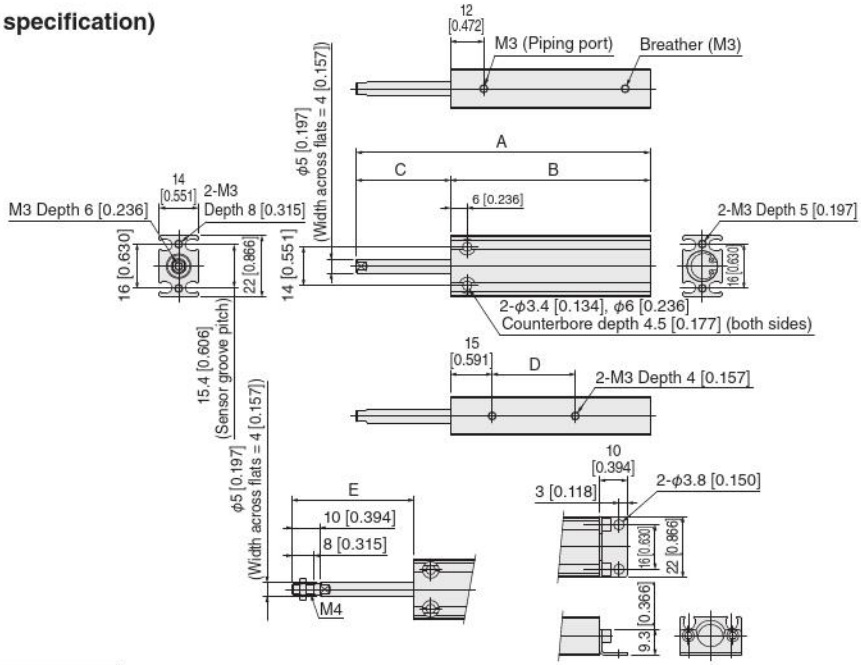

-B: Male thread specifications -BK: With bracket (shipped attached)

Stroke	A	B	C	D	E
5	56 [2.205]	47 [1.850]	9 [0.354]	20 [0.787]	19 [0.748]
10	66 [2.598]	52 [2.047]	14 [0.551]	20 [0.787]	24 [0.945]
15	76 [2.992]	57 [2.244]	19 [0.748]	30 [1.181]	29 [1.142]

Note: This product cannot use reed switch type sensor switches.

●BCTA12
●BCTAR12 (corrosion resistant specification)

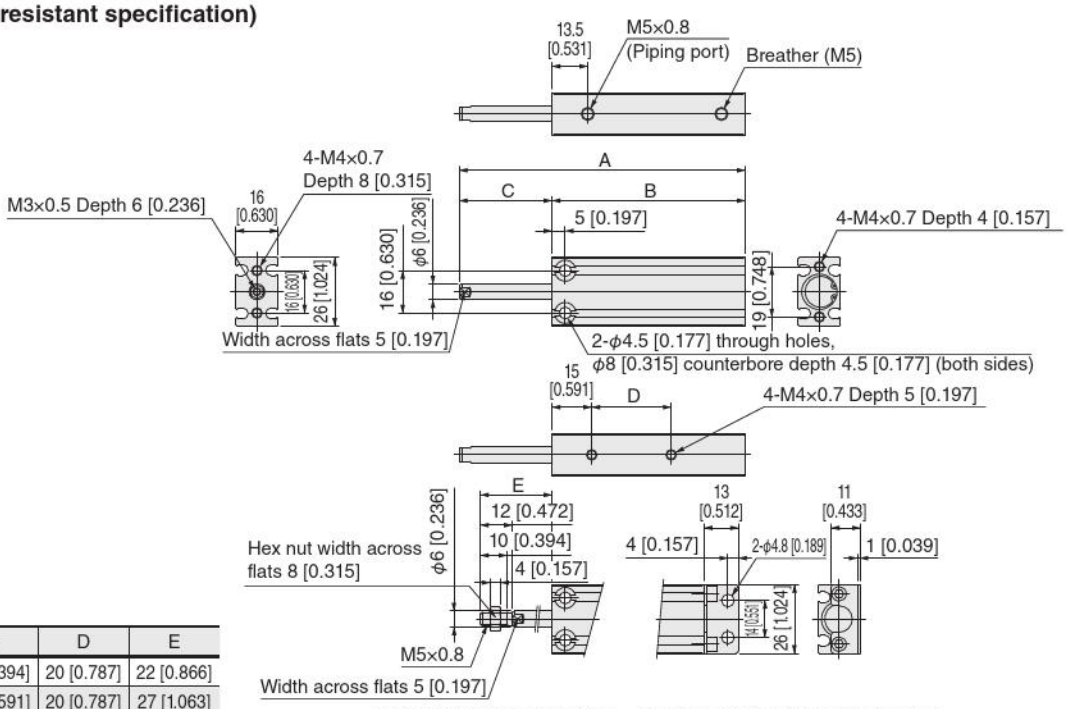

-B: Male thread specifications -BK: With bracket (shipped attached)

Stroke	A	B	C	D	E
5	58 [2.283]	48 [1.890]	10 [0.394]	20 [0.787]	22 [0.866]
10	68 [2.677]	53 [2.087]	15 [0.591]	20 [0.787]	27 [1.063]
15	78 [3.071]	58 [2.283]	20 [0.787]	30 [1.181]	32 [1.260]
20	88 [3.465]	63 [2.480]	25 [0.984]	30 [1.181]	37 [1.457]
25	98 [3.858]	68 [2.677]	30 [1.181]	40 [1.575]	42 [1.654]
30	108 [4.252]	73 [2.874]	35 [1.378]	40 [1.575]	47 [1.850]

Note: This product cannot use reed switch type sensor switches.

●BCTA16
●BCTAR16 (corrosion resistant specification)

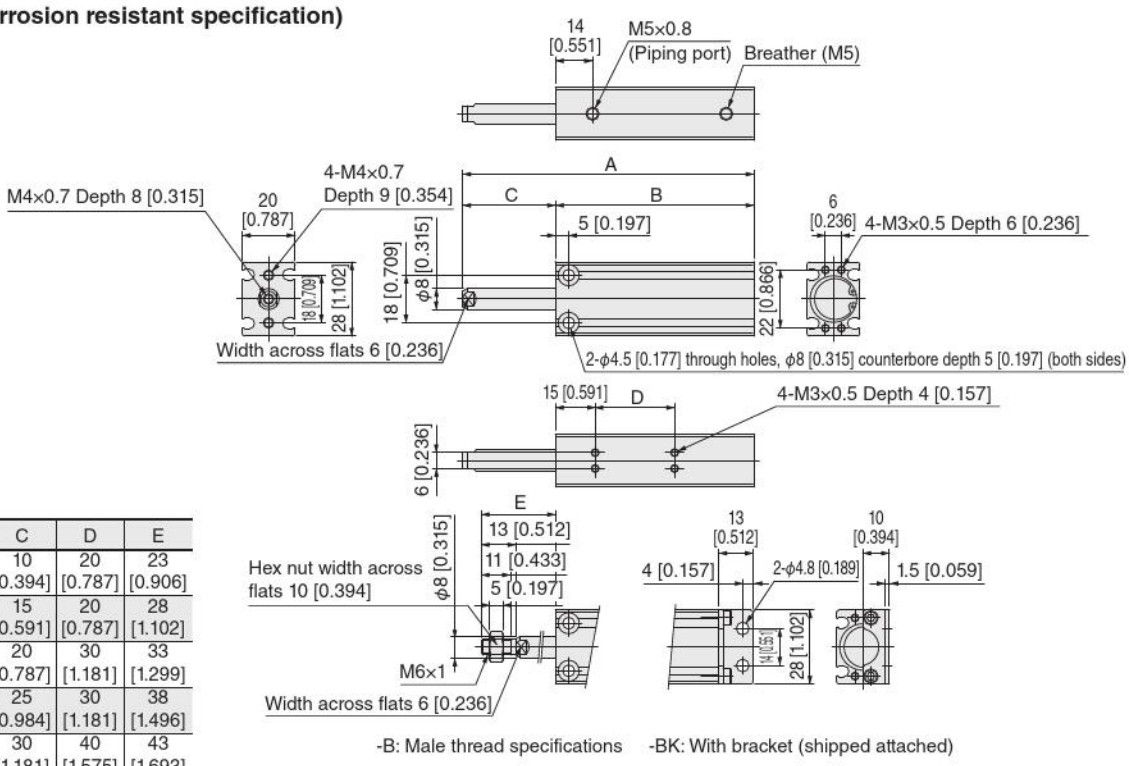

-B: Male thread specifications -BK: With bracket (shipped attached)

Stroke	A	B	C	D	E
5	60 [2.362]	50 [1.969]	10 [0.394]	20 [0.787]	23 [0.906]
10	70 [2.756]	55 [2.165]	15 [0.591]	20 [0.787]	28 [1.102]
15	80 [3.150]	60 [2.362]	20 [0.787]	30 [1.181]	33 [1.299]
20	90 [3.543]	65 [2.559]	25 [0.984]	30 [1.181]	38 [1.496]
25	100 [3.937]	70 [2.756]	30 [1.181]	40 [1.575]	43 [1.693]
30	110 [4.331]	75 [2.953]	35 [1.378]	40 [1.575]	48 [1.890]

●BCTA20
●BCTAR20 (corrosion resistant specification)

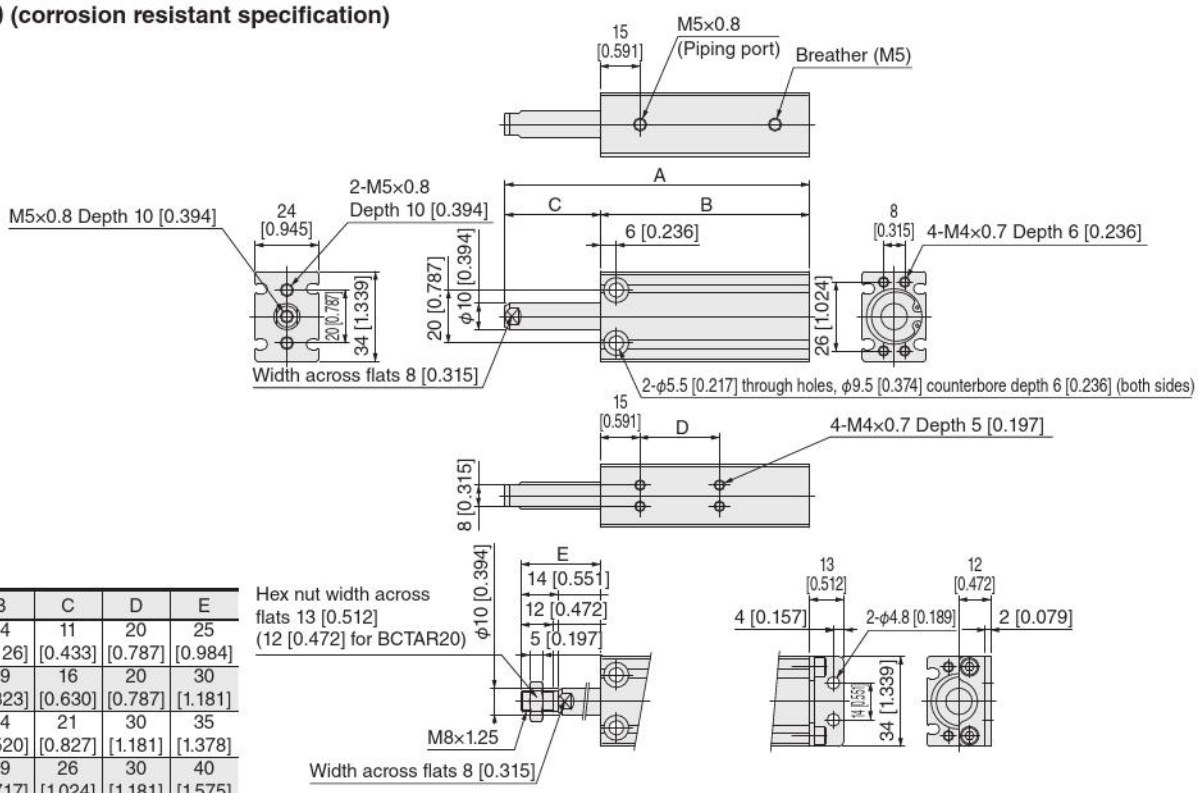

-B: Male thread specifications -BK: With bracket (shipped attached)

Stroke	A	B	C	D	E
5	65 [2.559]	54 [2.126]	11 [0.433]	20 [0.787]	25 [0.984]
10	75 [2.953]	59 [2.323]	16 [0.630]	20 [0.787]	30 [1.181]
15	85 [3.346]	64 [2.520]	21 [0.827]	30 [1.181]	35 [1.378]
20	95 [3.740]	69 [2.717]	26 [1.024]	30 [1.181]	40 [1.575]
25	105 [4.134]	74 [2.913]	31 [1.220]	40 [1.575]	45 [1.772]
30	115 [4.528]	79 [3.110]	36 [1.417]	40 [1.575]	50 [1.969]

Single acting pull type dimensions (mm [in.])

●BCTA25
●BCTAR25 (corrosion resistant specification)

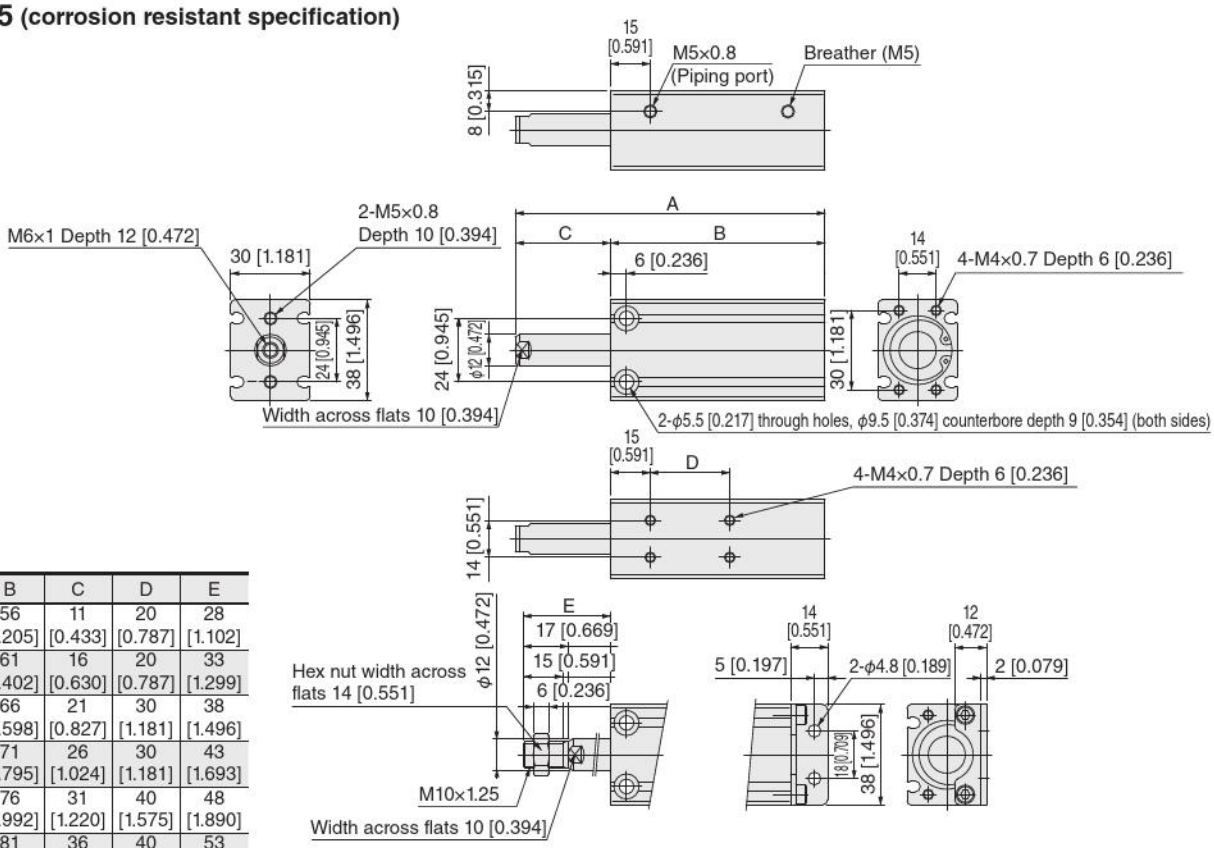

Stroke	A	B	C	D	E
5	67 [2.638]	56 [2.205]	11 [0.433]	20 [0.787]	28 [1.102]
10	77 [3.031]	61 [2.402]	16 [0.630]	20 [0.787]	33 [1.299]
15	87 [3.425]	66 [2.598]	21 [0.827]	30 [1.181]	38 [1.496]
20	97 [3.819]	71 [2.795]	26 [1.024]	30 [1.181]	43 [1.693]
25	107 [4.213]	76 [2.992]	31 [1.220]	40 [1.575]	48 [1.890]
30	117 [4.606]	81 [3.189]	36 [1.417]	40 [1.575]	53 [2.087]

●BCTA32
●BCTAR32 (corrosion resistant specification)

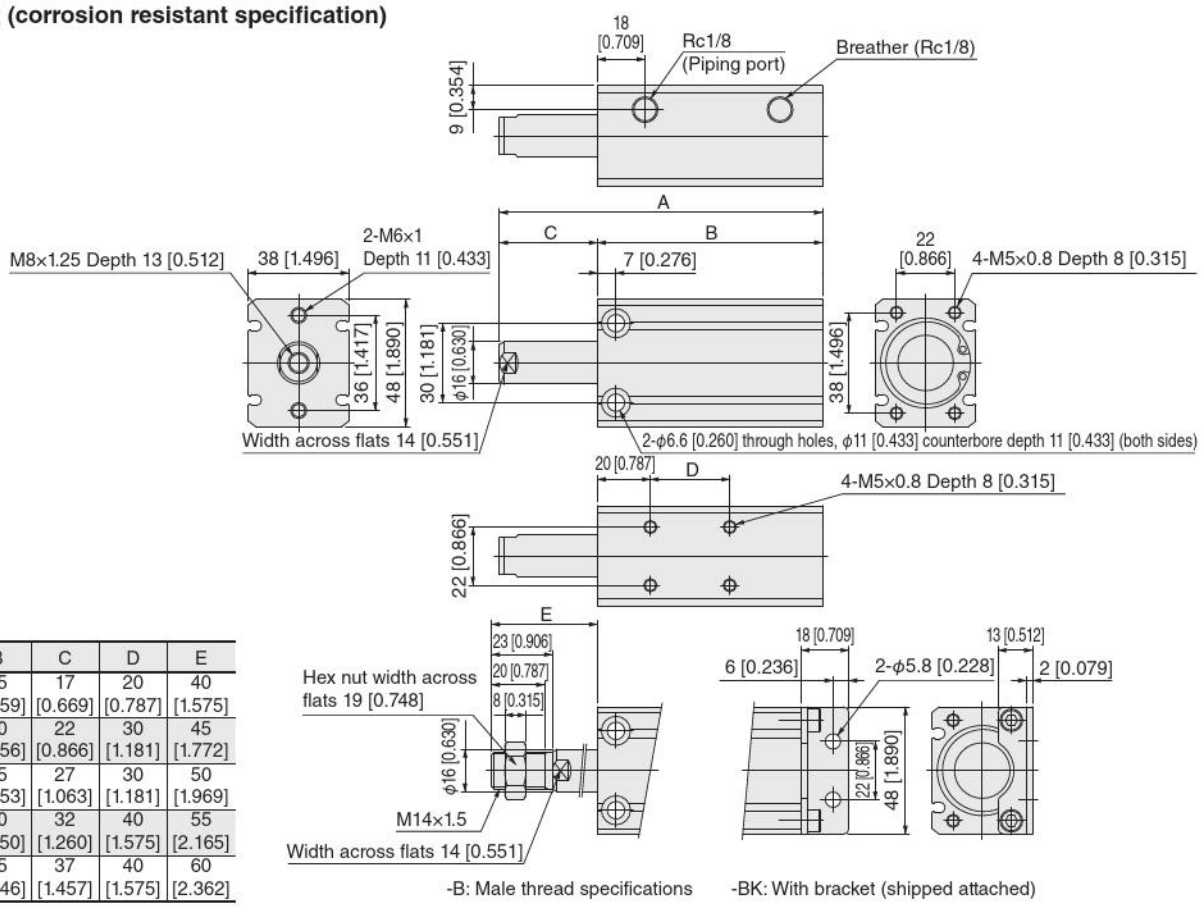

Stroke	A	B	C	D	E
10	82 [3.228]	65 [2.559]	17 [0.669]	20 [0.787]	40 [1.575]
15	92 [3.622]	70 [2.756]	22 [0.866]	30 [1.181]	45 [1.772]
20	102 [4.016]	75 [2.953]	27 [1.063]	30 [1.181]	50 [1.969]
25	112 [4.409]	80 [3.150]	32 [1.260]	40 [1.575]	55 [2.165]
30	122 [4.803]	85 [3.346]	37 [1.457]	40 [1.575]	60 [2.362]

Single acting pull type dimensions (mm [in.])

●BCTA40
●BCTAR40 (corrosion resistant specification)

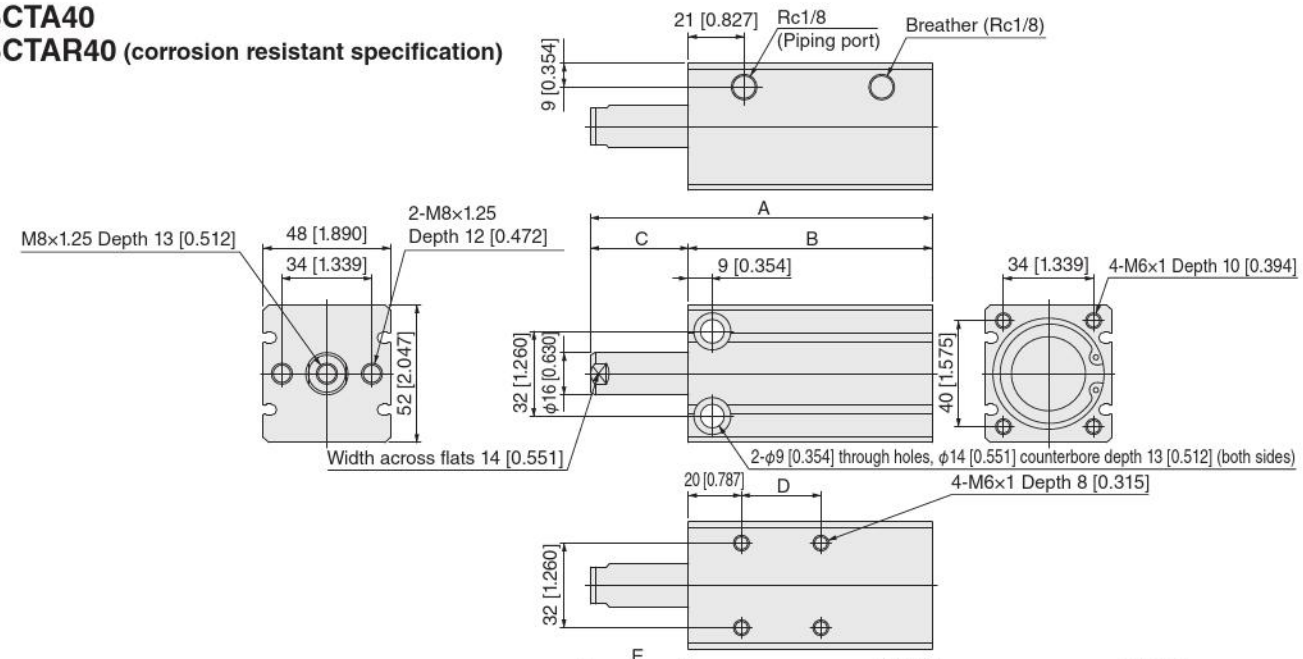

Stroke	A	B	C	D	E
10	89 [3.504]	72 [2.835]	17 [0.669]	20 [0.787]	40 [1.575]
15	99 [3.898]	77 [3.031]	22 [0.866]	30 [1.181]	45 [1.772]
20	109 [4.291]	82 [3.228]	27 [1.063]	30 [1.181]	50 [1.969]
25	119 [4.685]	87 [3.425]	32 [1.260]	40 [1.575]	55 [2.165]
30	129 [5.079]	92 [3.622]	37 [1.457]	40 [1.575]	60 [2.362]

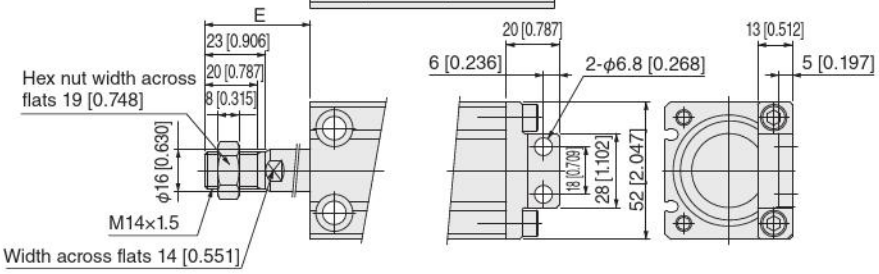

-B: Male thread specifications -BK: With bracket (shipped attached)

●BCTA50
●BCTAR50 (corrosion resistant specification)

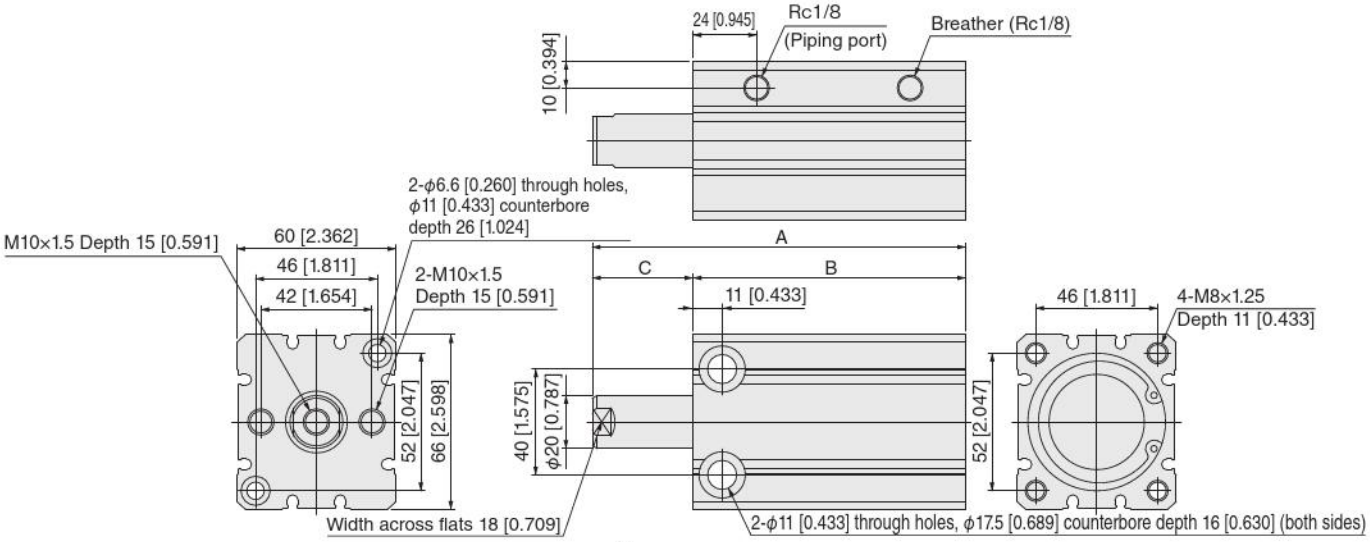

Stroke	A	B	C	D
10	101 [3.976]	83 [3.268]	18 [0.709]	46 [1.811]
15	111 [4.370]	88 [3.465]	23 [0.906]	51 [2.008]
20	121 [4.764]	93 [3.661]	28 [1.102]	56 [2.205]
25	131 [5.157]	98 [3.858]	33 [1.299]	61 [2.402]
30	141 [5.551]	103 [4.055]	38 [1.496]	66 [2.598]

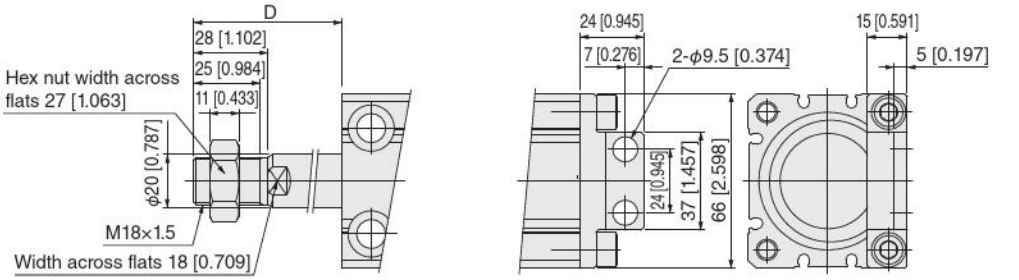

-B: Male thread specifications -BK: With bracket (shipped attached)

Basic Cylinders

Double rod end cylinders

Symbol

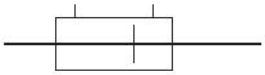

Specifications (standard, corrosion resistant specifications)

Item \ Cylinder bore	6 [0.236]	8 [0.315]	10 [0.394]	12 [0.472]	16 [0.630]	20 [0.787]	25 [0.984]	32 [1.260]	40 [1.575]	50 [1.969]	63 [2.480]	80 [3.150]	100 [3.937]	125 [4.921]
Operating type	Double acting type													
Medium	Air													
Operating pressure range MPa [psi]	0.2 to 0.7 [29 to 102]		0.1 to 0.7 [15 to 102]			0.08 to 0.7 [12 to 102]								
Proof pressure MPa [psi]	1.05 [152]													
Operating temperature range °C [°F]	0 to 60 [32 to 140]													
Operating speed range mm/s [in/sec]	50 to 500 [1.969 to 19.685]										50 to 300 [1.969 to 11.811]			
Cushion	Rubber bumper													
Lubrication	Not required													
Port size	M3×0.5			M5×0.8				Rc1/8			Rc1/4		Rc3/8	

Cylinder bore and stroke

Cylinder bore	Standard stroke
6 [0.236], 8 [0.315], 10 [0.394], 12 [0.472], 16 [0.630]	5, 10, 15, 20, 25, 30
20 [0.787], 25 [0.984]	5, 10, 15, 20, 25, 30, 40, 50
32 [1.260], 40 [1.575], 50 [1.969], 63 [2.480], 80 [3.150], 100 [3.937], 125 [4.921]	10, 20, 30, 40, 50, 60, 70, 75, 80, 90, 100

● Standard specifications

BC D × - - - -

Basic Cylinders

D: Double acting double rod end type

Cylinder bore × Stroke

● See page 54 for cylinder bores and strokes.

Piston rod end shape
- **Blank**: Female thread Note 1
- **B**: Male thread Note 1
- **BR**: Rod side female thread, Head side male thread
- **BH**: Rod side male thread, Head side female thread

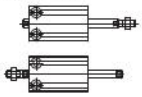

Bracket
- **Blank**: No bracket
- **BK**: With bracket Note 2

Sensor switch model
- **Blank**: No sensor switch
- **ZE135**: 2-lead wires, solid state type, horizontal lead wires
- **ZE155**: 3-lead wires, solid state NPN output type, horizontal lead wires
- **ZE175**: 3-lead wires, solid state PNP output type, horizontal lead wires
- **ZE235**: 2-lead wires, solid state type, vertical lead wires
- **ZE255**: 3-lead wires, solid state NPN output type, vertical lead wires
- **ZE275**: 3-lead wires, solid state PNP output type, vertical lead wires
- **ZE137**: 2-lead wires, 2-color LED solid state type, horizontal lead wires
- **ZE157**: 3-lead wires, 2-color LED solid state NPN output type, horizontal lead wires
- **ZE177**: 3-lead wires, 2-color LED solid state PNP output type, horizontal lead wires
- **ZE237**: 2-lead wires, 2-color LED solid state type, vertical lead wires
- **ZE257**: 3-lead wires, 2-color LED solid state NPN output type, vertical lead wires
- **ZE277**: 3-lead wires, 2-color LED solid state PNP output type, vertical lead wires
- **ZE101**: 2-lead wires, reed switch type without indicator, horizontal lead wires Note 3
- **ZE102**: 2-lead wires, reed switch type, horizontal lead wires Note 3+
- **ZE201**: 2-lead wires, reed switch type without indicator, vertical lead wires Note 3
- **ZE202**: 2-lead wires, reed switch type, vertical lead wires Note 3

● For details on sensor switches, see page 99.

Lead wire length
- **A**: 1000 mm [39.370 in.]
- **B**: 3000 mm [118.1 in.]
- **G**: 300 mm [11.811 in.] with M8 connector, only on the **ZE175**, **ZE177**, **ZE275**, **ZE277**

Number of sensor switches
- **1**: 1 sensor switch
- **2**: 2 sensor switches
- **3**: 3 sensor switches
- ⋮

Note 1: The both rod ends are the same shape. When ends are not the same shape, select **-BR** or **-BH**.
2: Brackets cannot be attached to cylinders that have ϕ6 [0.236] and ϕ8 [0.315] cylinder bores.
3: Reed type sensor switches cannot be attached to cylinders that have ϕ6 [0.236], ϕ8 [0.315], ϕ10 [0.394], or ϕ12 [0.472] cylinder bores.

● Corrosion resistant specification (Change of material of piston rod, etc.)

BC D R × - - - -

Basic Cylinders

D: Double acting double rod end type

R: Corrosion resistant specification

Cylinder bore × Stroke

● See page 54 for cylinder bores and strokes.

Piston rod end shape
- **Blank**: Female thread Note 1
- **B**: Male thread Note 1
- **BR**: Rod side female thread, Head side male thread
- **BH**: Rod side male thread, Head side female thread

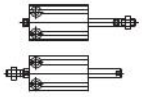

Bracket
- **Blank**: No bracket
- **BK**: With bracket Note 2

Sensor switch model
- **Blank**: No sensor switch
- **ZE135**: 2-lead wires, solid state type, horizontal lead wires
- **ZE155**: 3-lead wires, solid state NPN output type, horizontal lead wires
- **ZE175**: 3-lead wires, solid state PNP output type, horizontal lead wires
- **ZE235**: 2-lead wires, solid state type, vertical lead wires
- **ZE255**: 3-lead wires, solid state NPN output type, vertical lead wires
- **ZE275**: 3-lead wires, solid state PNP output type, vertical lead wires
- **ZE137**: 2-lead wires, 2-color LED solid state type, horizontal lead wires
- **ZE157**: 3-lead wires, 2-color LED solid state NPN output type, horizontal lead wires
- **ZE177**: 3-lead wires, 2-color LED solid state PNP output type, horizontal lead wires
- **ZE237**: 2-lead wires, 2-color LED solid state type, vertical lead wires
- **ZE257**: 3-lead wires, 2-color LED solid state NPN output type, vertical lead wires
- **ZE277**: 3-lead wires, 2-color LED solid state PNP output type, vertical lead wires
- **ZE101**: 2-lead wires, reed switch type without indicator, horizontal lead wires Note 3
- **ZE102**: 2-lead wires, reed switch type, horizontal lead wires Note 3+
- **ZE201**: 2-lead wires, reed switch type without indicator, vertical lead wires Note 3
- **ZE202**: 2-lead wires, reed switch type, vertical lead wires Note 3

● For details on sensor switches, see page 99.

Lead wire length
- **A**: 1000 mm [39.370 in.]
- **B**: 3000 mm [118.1 in.]
- **G**: 300 mm [11.811 in.] with M8 connector, only on the **ZE175**, **ZE177**, **ZE275**/, **ZE277**

Number of sensor switches
- **1**: 1 sensor switch
- **2**: 2 sensor switches
- **3**: 3 sensor switches
- ⋮

Note 1: The both rod ends are the same shape. When ends are not the same shape, select **-BR** or **-BH**.
2: Brackets cannot be attached to cylinders that have ϕ6 [0.236] and ϕ8 [0.315] cylinder bores.
3: Reed type sensor switches cannot be attached to cylinders that have ϕ6 [0.236], ϕ8 [0.315], ϕ10 [0.394], or ϕ12 [0.472] cylinder bores.

Mass

● Double rod end cylinders

g

Model	Stroke													
	5	10	15	20	25	30	40	50	60	70	75	80	90	100
BCD6	16 (20)	19 (23)	22 (26)	25 (29)	28 (32)	31 (35)	–	–	–	–	–	–	–	–
BCD8	23 (27)	27 (31)	31 (35)	35 (39)	39 (43)	43 (47)	–	–	–	–	–	–	–	–
BCD10	25 (29)	29 (33)	33 (37)	37 (41)	41 (45)	45 (49)	–	–	–	–	–	–	–	–
BCD12	36 (42)	42 (48)	48 (54)	54 (60)	60 (66)	66 (72)	–	–	–	–	–	–	–	–
BCD16	55 (65)	63 (73)	71 (81)	79 (89)	87 (97)	95 (105)	–	–	–	–	–	–	–	–
BCD20	94 (114)	107 (127)	120 (140)	133 (153)	146 (166)	159 (179)	185 (205)	211 (231)	–	–	–	–	–	–
BCD25	137 (169)	154 (186)	171 (203)	188 (220)	205 (237)	222 (254)	256 (288)	290 (322)	–	–	–	–	–	–
BCD32	–	277 (357)	–	334 (414)	–	391 (471)	448 (528)	505 (585)	562 (642)	619 (699)	648 (728)	676 (756)	733 (813)	790 (870)
BCD40	–	383 (463)	–	446 (526)	–	509 (589)	572 (652)	635 (715)	698 (778)	761 (841)	793 (873)	824 (904)	887 (967)	950 (1030)
BCD50	–	690 (880)	–	786 (976)	–	882 (1072)	978 (1168)	1074 (1264)	1170 (1360)	1266 (1456)	1314 (1504)	1362 (1552)	1458 (1648)	1554 (1744)
BCD63	–	1016 (1206)	–	1122 (1312)	–	1228 (1418)	1334 (1524)	1440 (1630)	1546 (1736)	1652 (1842)	1705 (1895)	1758 (1948)	1864 (2054)	1970 (2160)
BCD80	–	1526 (1886)	–	1672 (2032)	–	1818 (2178)	1964 (2324)	2110 (2470)	2256 (2616)	2402 (2762)	2475 (2835)	2548 (2908)	2694 (3054)	2840 (3200)
BCD100	–	2520 (3120)	–	2745 (3345)	–	2970 (3570)	3195 (3795)	3420 (4020)	3645 (4245)	3870 (4470)	3983 (4583)	4095 (4695)	4320 (4920)	4545 (5145)
BCD125	–	4070 (5152)	–	4380 (5462)	–	4690 (5772)	5000 (6082)	5310 (6392)	5621 (6703)	5932 (7014)	6088 (7170)	6243 (7325)	6554 (7636)	6865 (7947)

Values in ( ) parentheses are masses for male thread specifications

● Additional mass of sensor switches

ZE□□□A, ZE□□□G: 15 g **ZE□□□B**: 35 g

Internal construction (standard, corrosion resistant specifications)

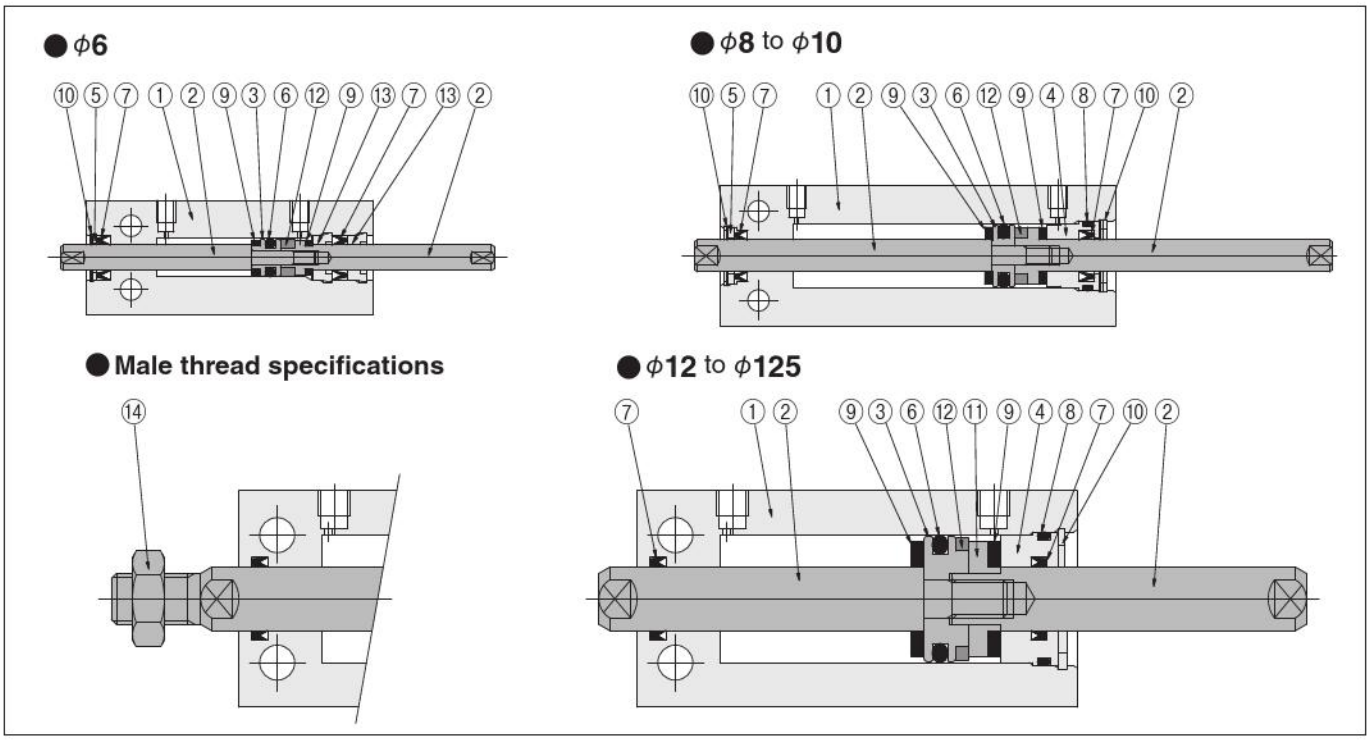

Major parts and materials

No	Name	φ6	φ8	φ10	φ12	φ16	φ20	φ25	φ32	φ40	φ50	φ63	φ80	φ100	φ125
①	Cylinder body	Aluminum alloy (special anti-abrasion treated)													
②	Piston rod	Stainless steel							Carbon steel (Corrosion resistant specification is stainless steel.)						
③	Piston	Stainless steel				Aluminum alloy (anodized)									
④	Head cover	Aluminum alloy (anodized)													
⑤	Packing holder	Aluminum alloy (anodized)			–	–	–	–	–	–	–	–	–	–	–
⑥	★Piston packing	Synthetic rubber (NBR)													
⑦	★Rod packing	Synthetic rubber (NBR)													
⑧	★O-ring	Synthetic rubber (NBR)													
⑨	Bumper	Urethane rubber	Synthetic rubber (NBR)												
⑩	★Retaining ring	Stainless steel			Steel (Corrosion resistant specification is electroless nickel plated.)										
⑪	Support	Stainless steel			Aluminum alloy (anodized)										
⑫	Magnet	Neodymium magnet							Plastic magnet						
⑬	Rod cap	Polyacetal	–	–	–	–	–	–	–	–	–	–	–	–	–
⑭	Rod end nut	Carbon steel (Corrosion resistant specification is stainless steel.)													

Items indicated by a ★ are available as additional parts or in packing sets. For order codes, see page 93.

Mass

● Double rod end cylinders

oz

Model	Stroke													
	5	10	15	20	25	30	40	50	60	70	75	80	90	100
BCD6	0.56 (0.71)	0.67 (0.81)	0.78 (0.92)	0.88 (1.02)	0.99 (1.13)	1.09 (1.23)	–	–	–	–	–	–	–	–
BCD8	0.81 (0.95)	0.95 (1.09)	1.09 (1.23)	1.23 (1.38)	1.38 (1.52)	1.52 (1.66)	–	–	–	–	–	–	–	–
BCD10	0.88 (1.02)	1.02 (1.16)	1.16 (1.31)	1.31 (1.45)	1.45 (1.59)	1.59 (1.73)	–	–	–	–	–	–	–	–
BCD12	1.27 (1.48)	1.48 (1.69)	1.69 (1.90)	1.90 (2.12)	2.12 (2.33)	2.33 (2.54)	–	–	–	–	–	–	–	–
BCD16	1.94 (2.29)	2.22 (2.57)	2.50 (2.86)	2.79 (3.14)	3.07 (3.42)	3.35 (3.70)	–	–	–	–	–	–	–	–
BCD20	3.32 (4.02)	3.77 (4.48)	4.23 (4.94)	4.69 (5.40)	5.15 (5.86)	5.61 (6.31)	6.53 (7.23)	7.44 (8.15)	–	–	–	–	–	–
BCD25	4.83 (5.96)	5.43 (6.56)	6.03 (7.16)	6.63 (7.76)	7.23 (8.36)	7.83 (8.96)	9.03 (10.16)	10.23 (11.36)	–	–	–	–	–	–
BCD32	–	9.77 (12.59)	–	11.78 (14.60)	–	13.79 (16.61)	15.80 (18.62)	17.81 (20.63)	19.82 (22.65)	21.83 (24.66)	22.86 (25.68)	23.84 (26.67)	25.86 (28.68)	27.87 (30.69)
BCD40	–	13.51 (16.33)	–	15.73 (18.55)	–	17.95 (20.78)	20.18 (23.00)	22.40 (25.22)	24.62 (27.44)	26.84 (29.66)	27.97 (30.79)	29.07 (31.89)	31.29 (34.11)	33.51 (36.33)
BCD50	–	24.34 (31.04)	–	27.72 (34.43)	–	31.11 (37.81)	34.50 (41.20)	37.88 (44.59)	41.27 (47.97)	44.66 (51.36)	46.35 (53.05)	48.04 (54.74)	51.43 (58.13)	54.81 (61.52)
BCD63	–	35.84 (42.54)	–	39.58 (46.28)	–	43.32 (50.02)	47.05 (53.76)	50.79 (57.50)	54.53 (61.23)	58.27 (64.97)	60.14 (66.84)	62.01 (68.71)	65.75 (72.45)	69.49 (76.19)
BCD80	–	53.83 (66.53)	–	58.98 (71.68)	–	64.13 (76.83)	69.28 (81.98)	74.43 (87.13)	79.58 (92.28)	84.73 (97.43)	87.30 (100.00)	89.88 (102.57)	95.03 (107.72)	100.18 (112.87)
BCD100	–	88.89 (110.05)	–	96.83 (117.99)	–	104.76 (125.93)	112.70 (133.86)	120.63 (141.80)	128.57 (149.74)	136.51 (157.67)	140.49 (161.66)	144.44 (165.61)	152.38 (173.54)	160.32 (181.48)
BCD125	–	143.56 (181.73)	–	154.50 (192.66)	–	165.43 (203.60)	176.37 (214.53)	187.30 (225.47)	198.27 (236.44)	209.24 (247.41)	214.74 (252.91)	220.21 (258.38)	231.18 (269.35)	242.15 (280.32)

Values in ( ) parentheses are masses for male thread specifications

● Additional mass of sensor switches

ZE□□□A, ZE□□□G: 0.53 oz **ZE□□□B**: 1.23 oz

Internal construction (standard, corrosion resistant specifications)

● φ0.236

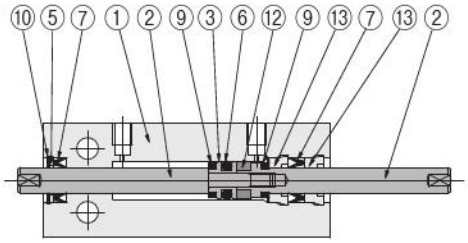

● φ0.315 to φ0.394

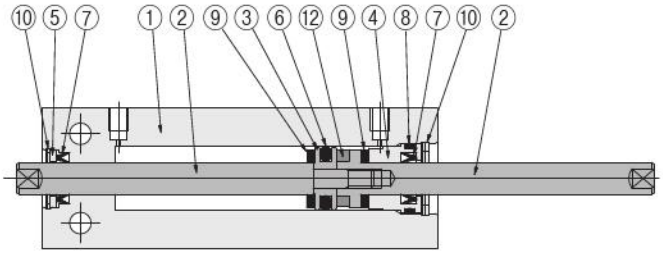

● Male thread specifications

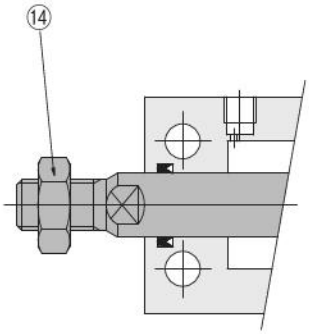

● φ0.472 to φ4.921

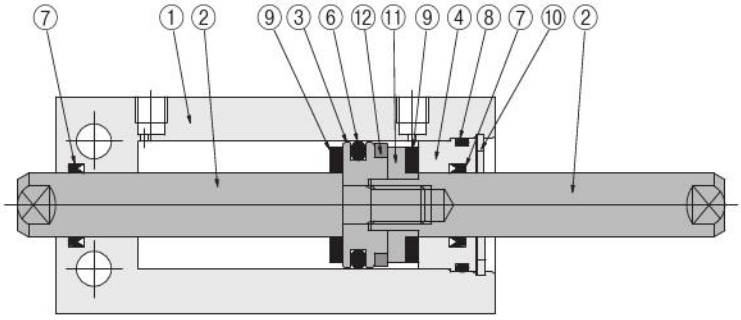

Major parts and materials

No	Name	φ0.236	φ0.315	φ0.394	φ0.472	φ0.630	φ0.787	φ0.984	φ1.260	φ1.575	φ1.969	φ2.480	φ3.150	φ3.937	φ4.921
①	Cylinder body	Aluminum alloy (special anti-abrasion treated)													
②	Piston rod	Stainless steel							Carbon steel (Corrosion resistant specification is stainless steel.)						
③	Piston	Stainless steel				Aluminum alloy (anodized)									
④	Head cover	Aluminum alloy (anodized)													
⑤	Packing holder	Aluminum alloy (anodized)			–	–	–	–	–	–	–	–	–	–	–
⑥	★Piston packing	Synthetic rubber (NBR)													
⑦	★Rod packing	Synthetic rubber (NBR)													
⑧	★O-ring	Synthetic rubber (NBR)													
⑨	Bumper	Urethane rubber	Synthetic rubber (NBR)												
⑩	★Retaining ring	Stainless steel			Steel (Corrosion resistant specification is electroless nickel plated.)										
⑪	Support	Stainless steel			Aluminum alloy (anodized)										
⑫	Magnet	Neodymium magnet							Plastic magnet						
⑬	Rod cap	Polyacetal	–	–	–	–	–	–	–	–	–	–	–	–	–
⑭	Rod end nut	Carbon steel (Corrosion resistant specification is stainless steel.)													

Items indicated by a ★ are available as additional parts or in packing sets. For order codes, see page 58.

Double acting double rod end type dimensions (mm [in.])

●BCD6
●BCDR6 (corrosion resistant specification)

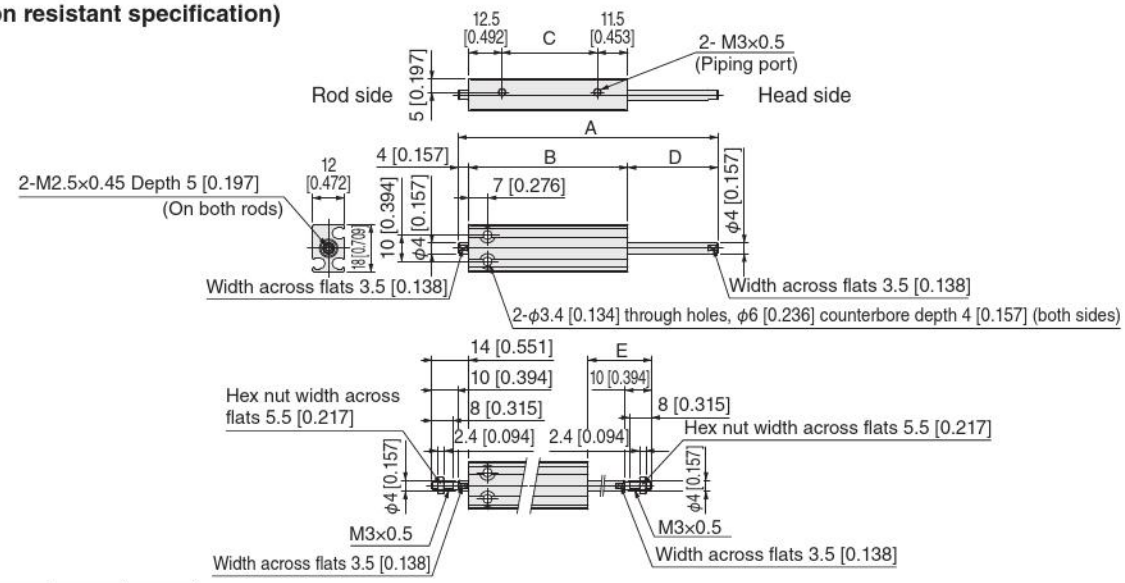

-B: Male thread specifications

Stroke	A	B	C	D	E
5	48 [1.890]	35 [1.378]	11 [0.433]	9 [0.354]	19 [0.748]
10	58 [2.283]	40 [1.575]	16 [0.630]	14 [0.551]	24 [0.945]
15	68 [2.677]	45 [1.772]	21 [0.827]	19 [0.748]	29 [1.142]
20	78 [3.071]	50 [1.969]	26 [1.024]	24 [0.945]	34 [1.339]
25	88 [3.465]	55 [2.165]	31 [1.220]	29 [1.142]	39 [1.535]
30	98 [3.858]	60 [2.362]	36 [1.417]	34 [1.339]	44 [1.732]

Remarks
-BR: Rod side female thread, head side male thread specification.
-BH: Rod side male thread, head side female thread specification.
Calculated dimensions referring to the female and male thread dimensions in the above diagram.

●BCD8
●BCDR8 (corrosion resistant specification)

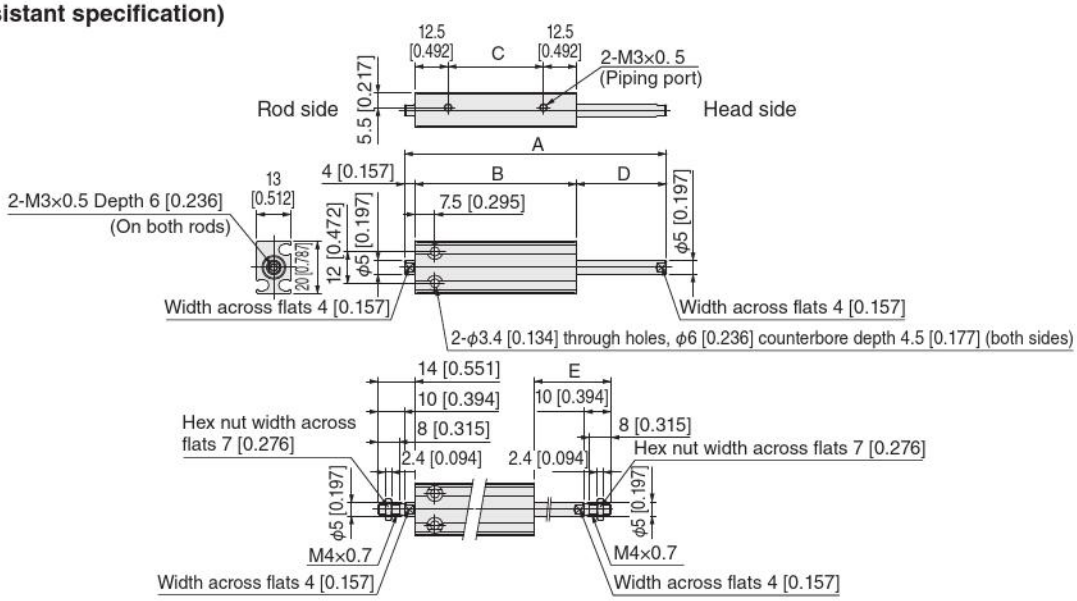

-B: Male thread specifications

Stroke	A	B	C	D	E
5	49 [1.929]	36 [1.417]	11 [0.433]	9 [0.354]	19 [0.748]
10	59 [2.323]	41 [1.614]	16 [0.630]	14 [0.551]	24 [0.945]
15	69 [2.717]	46 [1.811]	21 [0.827]	19 [0.748]	29 [1.142]
20	79 [3.110]	51 [2.008]	26 [1.024]	24 [0.945]	34 [1.339]
25	89 [3.504]	56 [2.205]	31 [1.220]	29 [1.142]	39 [1.535]
30	99 [3.898]	61 [2.402]	36 [1.417]	34 [1.339]	44 [1.732]

Remarks
-BR: Rod side female thread, head side male thread specification.
-BH: Rod side male thread, head side female thread specification.
Calculated dimensions referring to the female and male thread dimensions in the above diagram.

Note: This product cannot use reed switch type sensor switches.

Double acting double rod end type dimensions (mm [in.])

●BCD10
●BCDR10 (corrosion resistant specification)

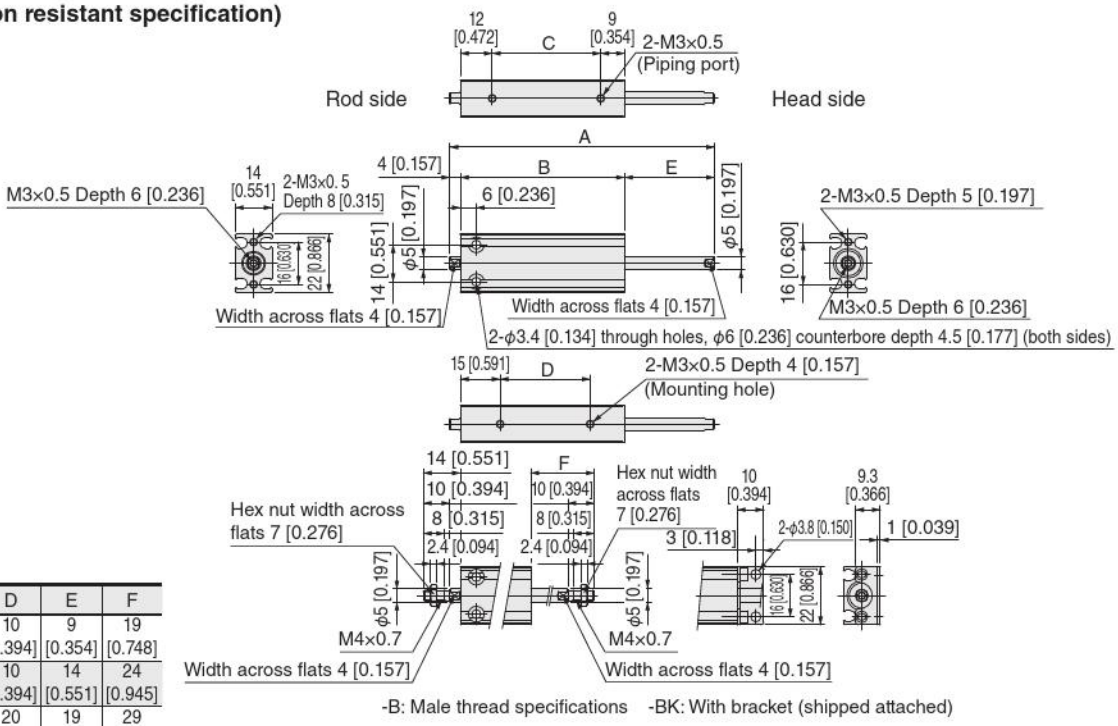

-B: Male thread specifications -BK: With bracket (shipped attached)

Stroke	A	B	C	D	E	F
5	50 [1.969]	37 [1.457]	16 [0.630]	10 [0.394]	9 [0.354]	19 [0.748]
10	60 [2.362]	42 [1.654]	21 [0.827]	10 [0.394]	14 [0.551]	24 [0.945]
15	70 [2.756]	47 [1.850]	26 [1.024]	20 [0.787]	19 [0.748]	29 [1.142]
20	80 [3.150]	52 [2.047]	31 [1.220]	20 [0.787]	24 [0.945]	34 [1.339]
25	90 [3.543]	57 [2.244]	36 [1.417]	30 [1.181]	29 [1.142]	39 [1.535]
30	100 [3.937]	62 [2.441]	41 [1.614]	30 [1.181]	34 [1.339]	44 [1.732]

Remarks
-BR: Rod side female thread, head side male thread specification.
-BH: Rod side male thread, head side female thread specification.
Calculated dimensions referring to the female and male thread dimensions in the above diagram.

Note: This product cannot use reed switch type sensor switches.

●BCD12
●BCDR12 (corrosion resistant specification)

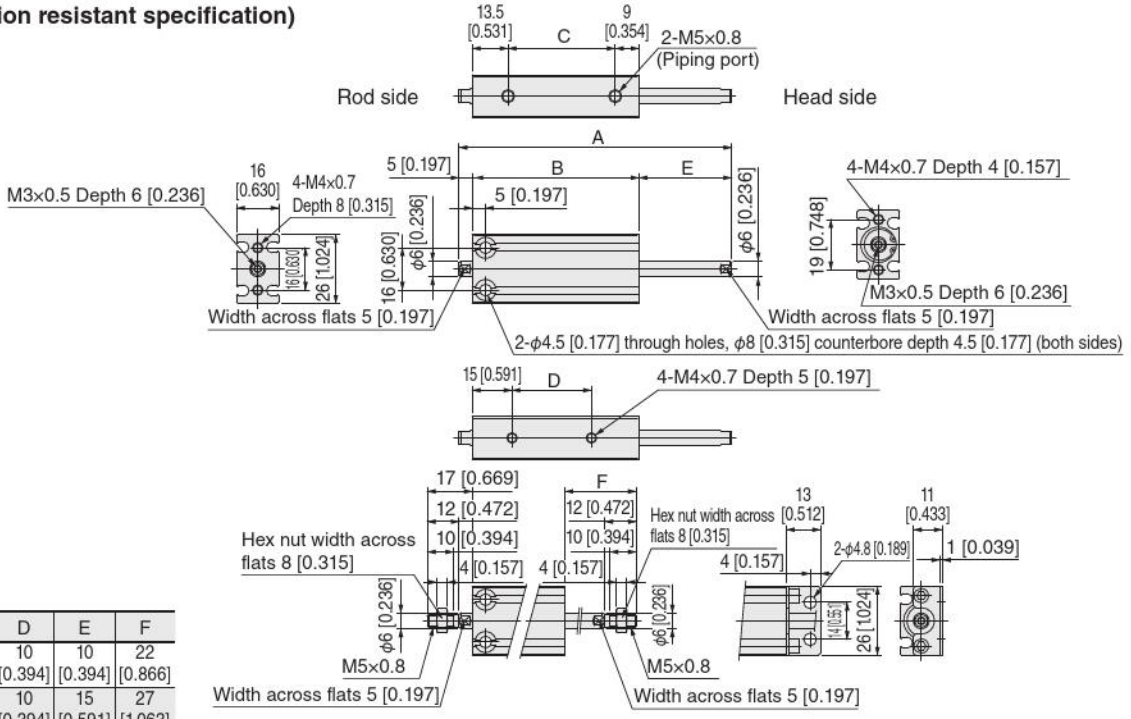

-B: Male thread specifications -BK: With bracket (shipped attached)

Stroke	A	B	C	D	E	F
5	53 [2.087]	38 [1.496]	15.5 [0.610]	10 [0.394]	10 [0.394]	22 [0.866]
10	63 [2.480]	43 [1.693]	20.5 [0.807]	10 [0.394]	15 [0.591]	27 [1.063]
15	73 [2.874]	48 [1.890]	25.5 [1.004]	20 [0.787]	20 [0.787]	32 [1.260]
20	83 [3.268]	53 [2.087]	30.5 [1.201]	20 [0.787]	25 [0.984]	37 [1.457]
25	93 [3.661]	58 [2.283]	35.5 [1.398]	30 [1.181]	30 [1.181]	42 [1.654]
30	103 [4.055]	63 [2.480]	40.5 [1.594]	30 [1.181]	35 [1.378]	47 [1.850]

Remarks
-BR: Rod side female thread, head side male thread specification.
-BH: Rod side male thread, head side female thread specification.
Calculated dimensions referring to the female and male thread dimensions in the above diagram.

Note: This product cannot use reed switch type sensor switches.

●BCD16
●BCDR16 (corrosion resistant specification)

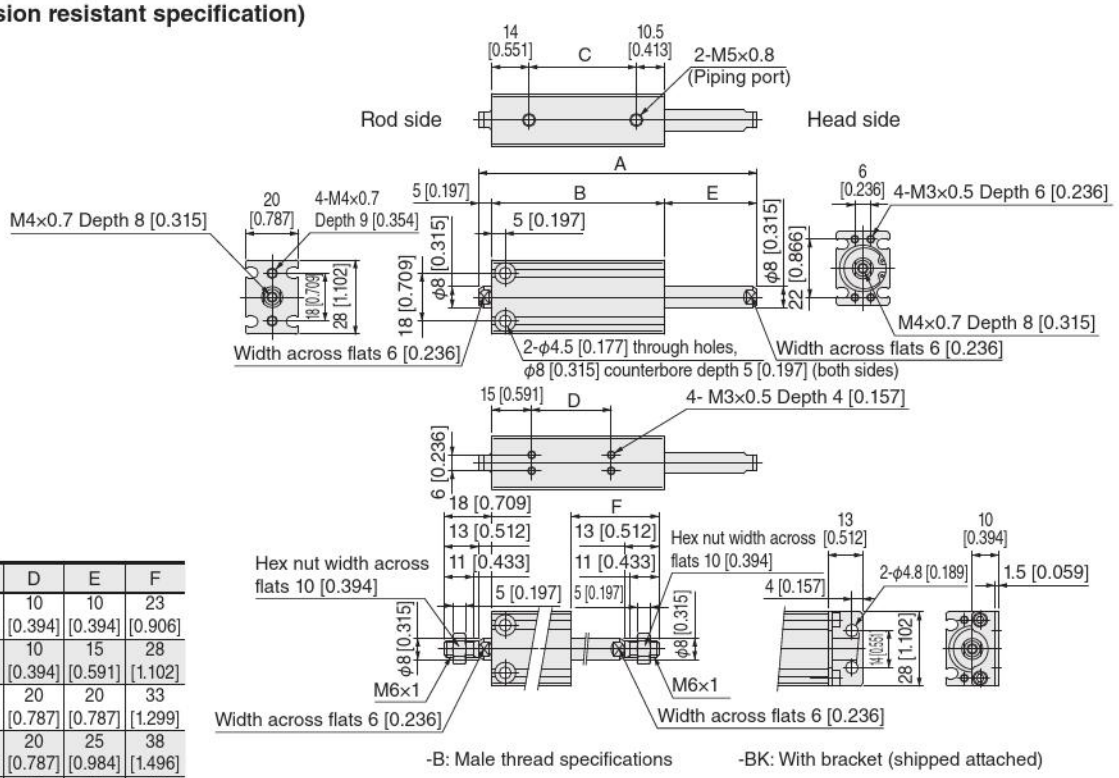

Stroke	A	B	C	D	E	F
5	55 [2.165]	40 [1.575]	15.5 [0.610]	10 [0.394]	10 [0.394]	23 [0.906]
10	65 [2.559]	45 [1.772]	20.5 [0.807]	10 [0.394]	15 [0.591]	28 [1.102]
15	75 [2.953]	50 [1.969]	25.5 [1.004]	20 [0.787]	20 [0.787]	33 [1.299]
20	85 [3.346]	55 [2.165]	30.5 [1.201]	20 [0.787]	25 [0.984]	38 [1.496]
25	95 [3.740]	60 [2.362]	35.5 [1.398]	30 [1.181]	30 [1.181]	43 [1.693]
30	105 [4.134]	65 [2.559]	40.5 [1.594]	30 [1.181]	35 [1.378]	48 [1.890]

-B: Male thread specifications -BK: With bracket (shipped attached)

Remarks
-BR: Rod side female thread, head side male thread specification.
-BH: Rod side male thread, head side female thread specification.
Calculated dimensions referring to the female and male thread dimensions in the above diagram.

●BCD20
●BCDR20 (corrosion resistant specification)

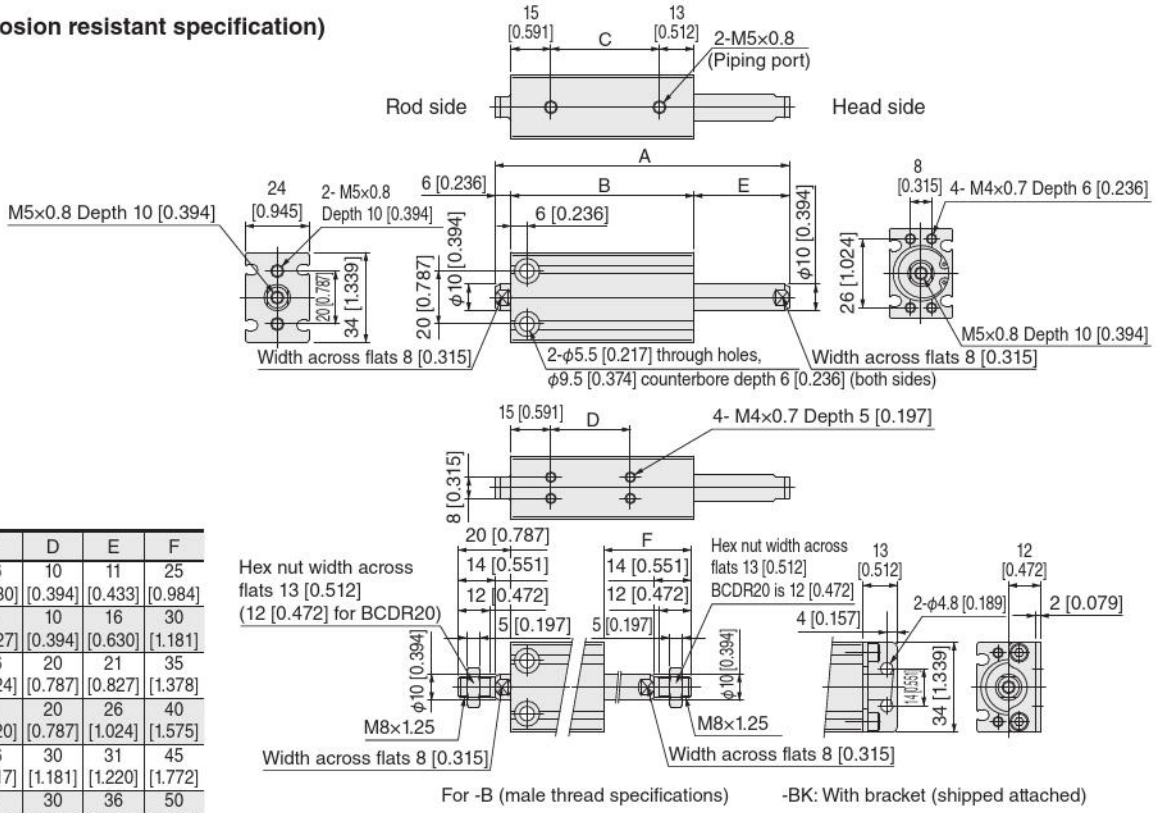

Stroke	A	B	C	D	E	F
5	61 [2.402]	44 [1.732]	16 [0.630]	10 [0.394]	11 [0.433]	25 [0.984]
10	71 [2.795]	49 [1.929]	21 [0.827]	10 [0.394]	16 [0.630]	30 [1.181]
15	81 [3.189]	54 [2.126]	26 [1.024]	20 [0.787]	21 [0.827]	35 [1.378]
20	91 [3.583]	59 [2.323]	31 [1.220]	20 [0.787]	26 [1.024]	40 [1.575]
25	101 [3.976]	64 [2.520]	36 [1.417]	30 [1.181]	31 [1.220]	45 [1.772]
30	111 [4.370]	69 [2.717]	41 [1.614]	30 [1.181]	36 [1.417]	50 [1.969]
40	131 [5.157]	79 [3.110]	51 [2.008]	40 [1.575]	46 [1.811]	60 [2.362]
50	151 [5.945]	89 [3.504]	61 [2.402]	50 [1.969]	56 [2.205]	70 [2.756]

For -B (male thread specifications) -BK: With bracket (shipped attached)

Remarks
-BR: Rod side female thread, head side male thread specification.
-BH: Rod side male thread, head side female thread specification.
Calculated dimensions referring to the female and male thread dimensions in the above diagram.

Double acting double rod end type dimensions (mm [in.])

●BCD25
●BCDR25 (corrosion resistant specification)

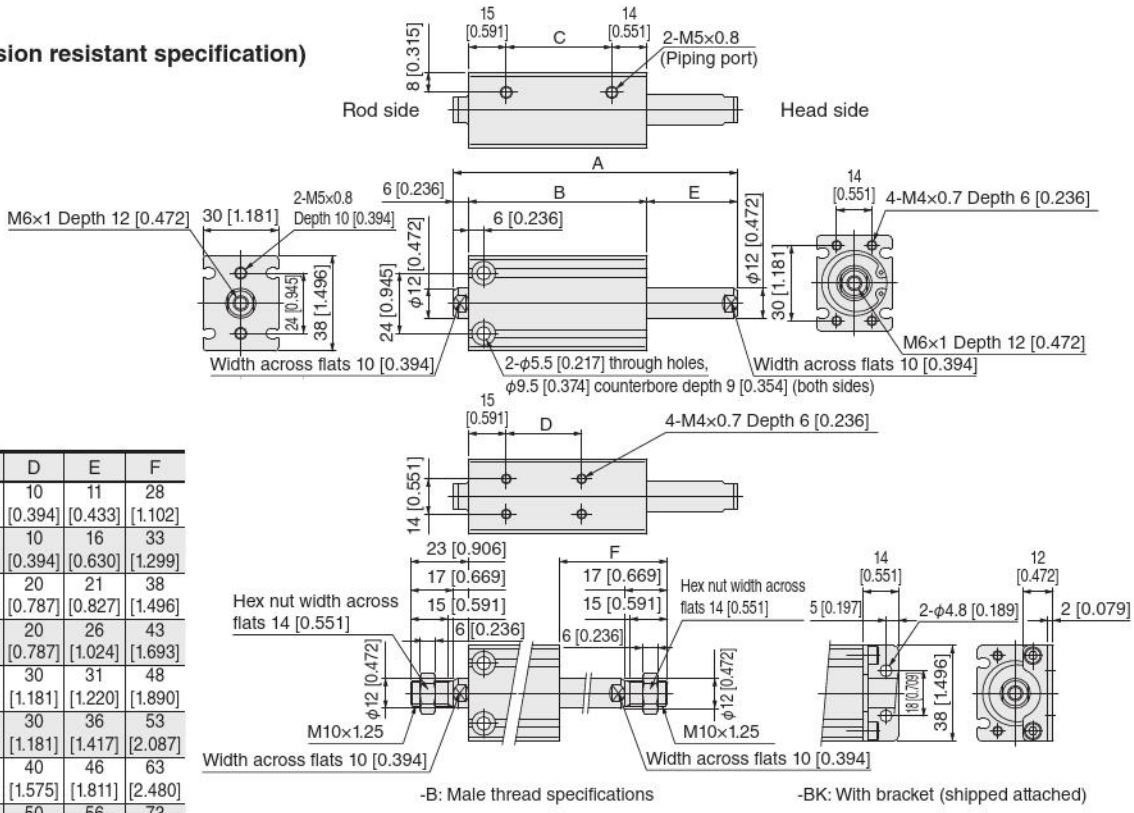

Stroke	A	B	C	D	E	F
5	63 [2.480]	46 [1.811]	17 [0.669]	10 [0.394]	11 [0.433]	28 [1.102]
10	73 [2.874]	51 [2.008]	22 [0.866]	10 [0.394]	16 [0.630]	33 [1.299]
15	83 [3.268]	56 [2.205]	27 [1.063]	20 [0.787]	21 [0.827]	38 [1.496]
20	93 [3.661]	61 [2.402]	32 [1.260]	20 [0.787]	26 [1.024]	43 [1.693]
25	103 [4.055]	66 [2.598]	37 [1.457]	30 [1.181]	31 [1.220]	48 [1.890]
30	113 [4.449]	71 [2.795]	42 [1.654]	30 [1.181]	36 [1.417]	53 [2.087]
40	133 [5.236]	81 [3.189]	52 [2.047]	40 [1.575]	46 [1.811]	63 [2.480]
50	153 [6.024]	91 [3.583]	62 [2.441]	50 [1.969]	56 [2.205]	73 [2.874]

Remarks
-BR: Rod side female thread, head side male thread specification.
-BH: Rod side male thread, head side female thread specification.
Calculated dimensions referring to the female and male thread dimensions in the above diagram.

●BCD32
●BCDR32 (corrosion resistant specification)

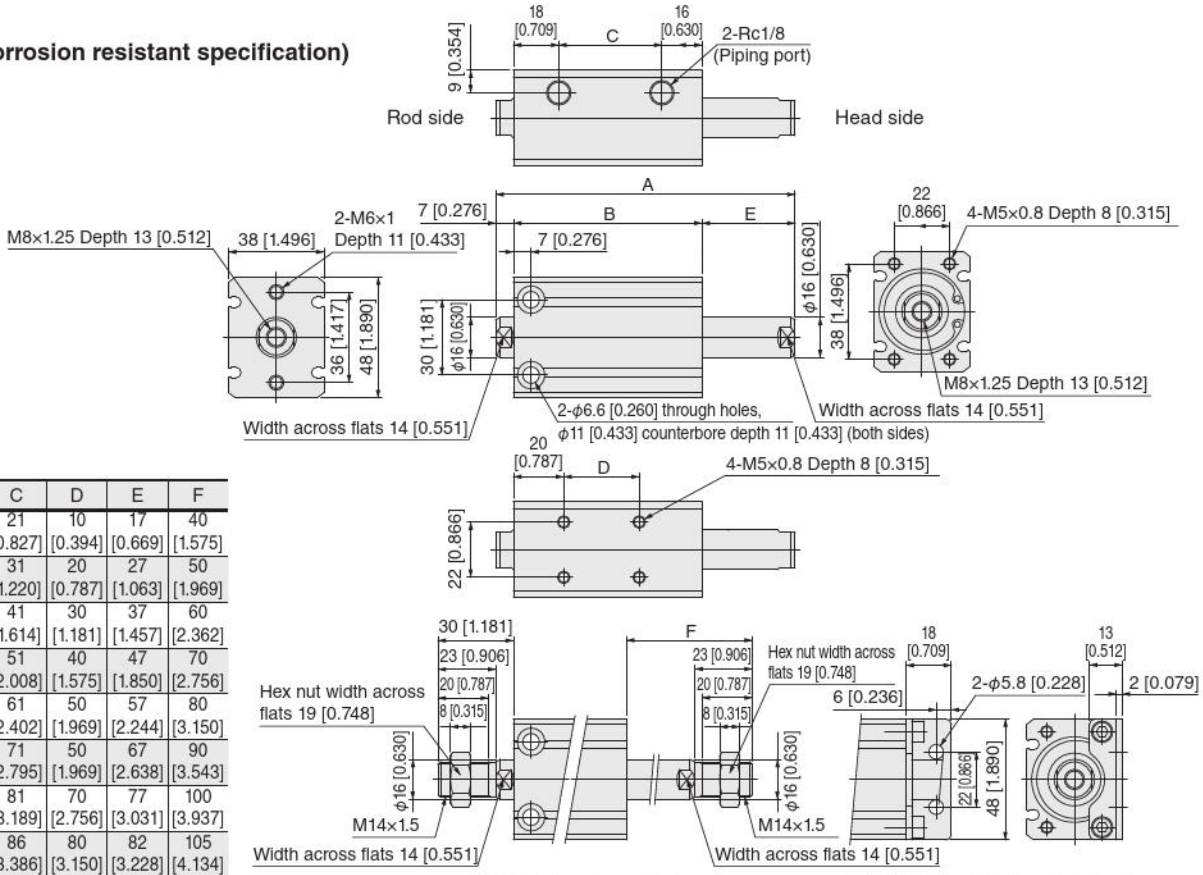

Stroke	A	B	C	D	E	F
10	79 [3.110]	55 [2.165]	21 [0.827]	10 [0.394]	17 [0.669]	40 [1.575]
20	99 [3.898]	65 [2.559]	31 [1.220]	20 [0.787]	27 [1.063]	50 [1.969]
30	119 [4.685]	75 [2.953]	41 [1.614]	30 [1.181]	37 [1.457]	60 [2.362]
40	139 [5.472]	85 [3.346]	51 [2.008]	40 [1.575]	47 [1.850]	70 [2.756]
50	159 [6.260]	95 [3.740]	61 [2.402]	50 [1.969]	57 [2.244]	80 [3.150]
60	179 [7.047]	105 [4.134]	71 [2.795]	50 [1.969]	67 [2.638]	90 [3.543]
70	199 [7.835]	115 [4.528]	81 [3.189]	70 [2.756]	77 [3.031]	100 [3.937]
75	209 [8.228]	120 [4.724]	86 [3.386]	80 [3.150]	82 [3.228]	105 [4.134]
80	219 [8.622]	125 [4.921]	91 [3.583]	80 [3.150]	87 [3.425]	110 [4.331]
90	239 [9.409]	135 [5.315]	101 [3.976]	80 [3.150]	97 [3.819]	120 [4.724]
100	259 [10.197]	145 [5.709]	111 [4.370]	100 [3.937]	107 [4.213]	130 [5.118]

Remarks
-BR: Rod side female thread, head side male thread specification.
-BH: Rod side male thread, head side female thread specification.
Calculated dimensions referring to the female and male thread dimensions in the above diagram.

Double acting double rod end type dimensions (mm [in.])

●BCD40
●BCDR40 (corrosion resistant specification)

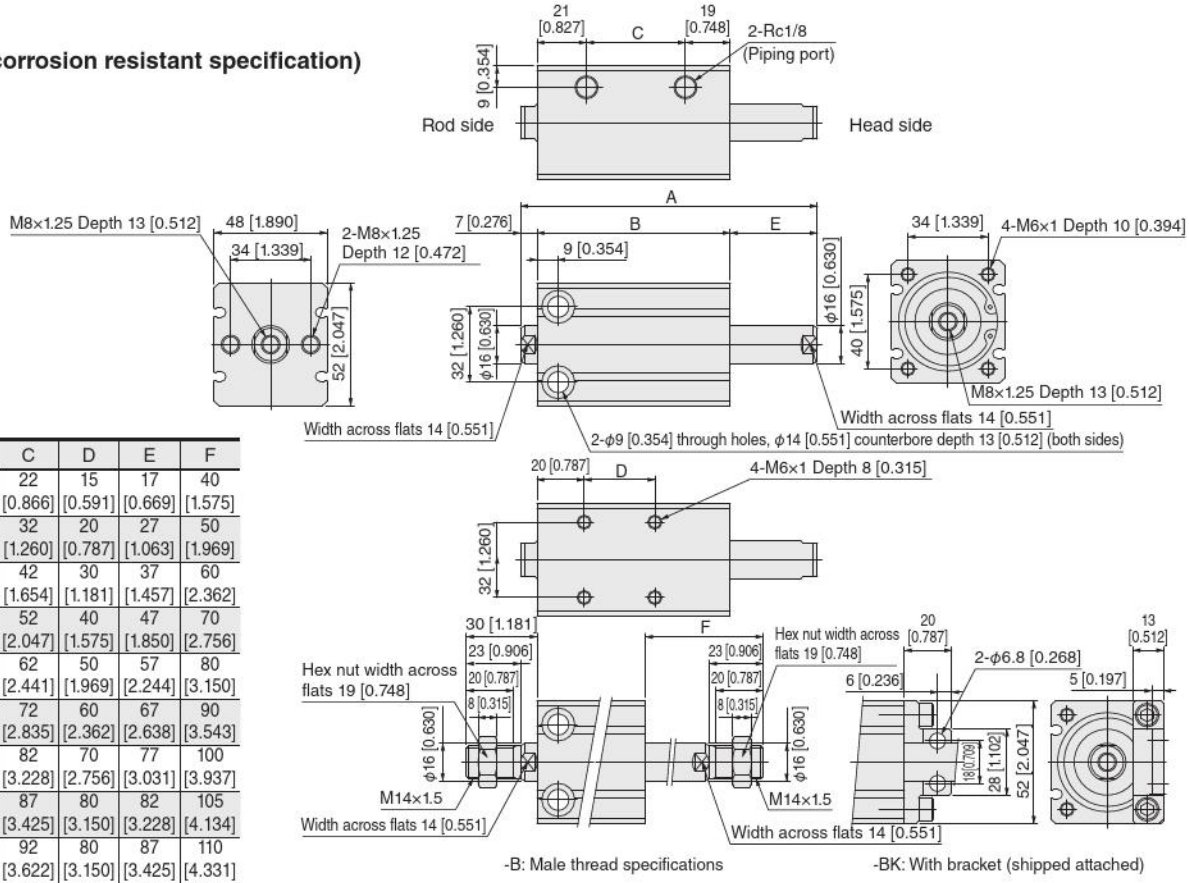

Stroke	A	B	C	D	E	F
10	86 [3.386]	62 [2.441]	22 [0.866]	15 [0.591]	17 [0.669]	40 [1.575]
20	106 [4.173]	72 [2.835]	32 [1.260]	20 [0.787]	27 [1.063]	50 [1.969]
30	126 [4.961]	82 [3.228]	42 [1.654]	30 [1.181]	37 [1.457]	60 [2.362]
40	146 [5.748]	92 [3.622]	52 [2.047]	40 [1.575]	47 [1.850]	70 [2.756]
50	166 [6.535]	102 [4.016]	62 [2.441]	50 [1.969]	57 [2.244]	80 [3.150]
60	186 [7.323]	112 [4.409]	72 [2.835]	60 [2.362]	67 [2.638]	90 [3.543]
70	206 [8.110]	122 [4.803]	82 [3.228]	70 [2.756]	77 [3.031]	100 [3.937]
75	216 [8.504]	127 [5.000]	87 [3.425]	80 [3.150]	82 [3.228]	105 [4.134]
80	226 [8.898]	132 [5.197]	92 [3.622]	80 [3.150]	87 [3.425]	110 [4.331]
90	246 [9.685]	142 [5.591]	102 [4.016]	80 [3.150]	97 [3.819]	120 [4.724]
100	266 [10.472]	152 [5.984]	112 [4.409]	100 [3.937]	107 [4.213]	130 [5.118]

Remarks
-BR: Rod side female thread, head side male thread specification.
-BH: Rod side male thread, head side female thread specification.
Calculated dimensions referring to the female and male thread dimensions in the above diagram.

●BCD50
●BCDR50 (corrosion resistant specification)

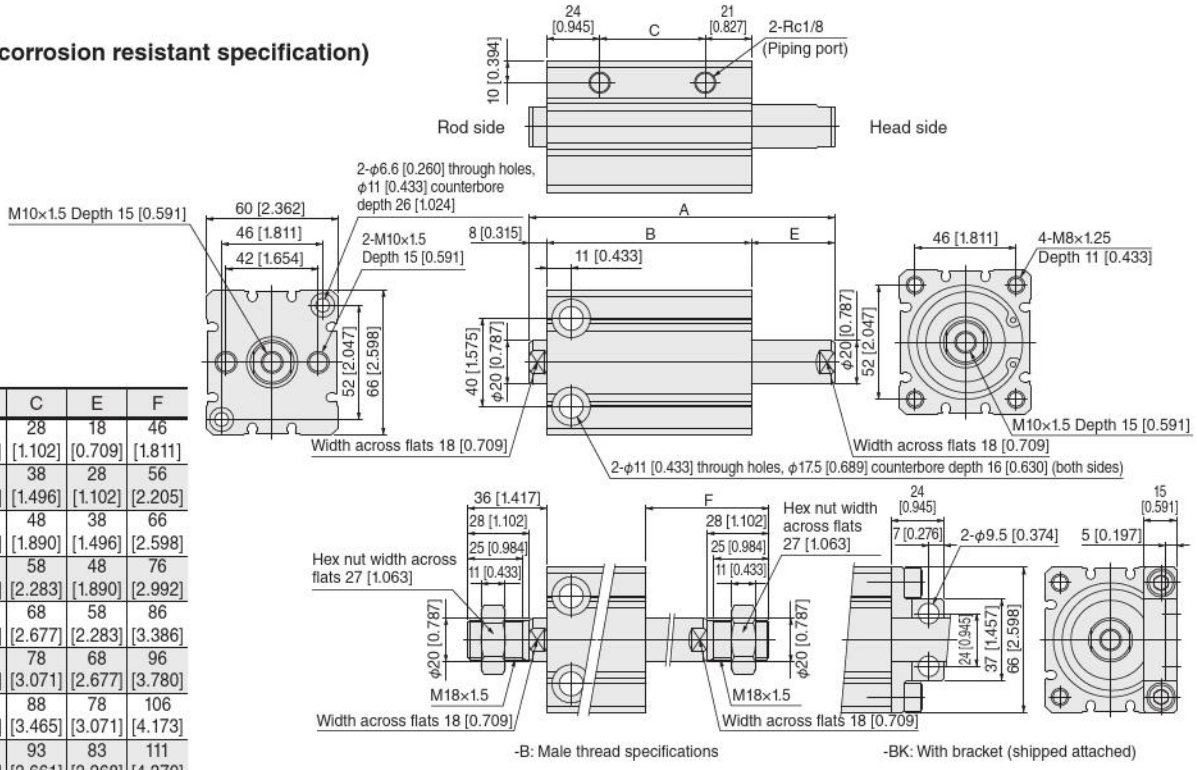

Stroke	A	B	C	E	F
10	99 [3.898]	73 [2.874]	28 [1.102]	18 [0.709]	46 [1.811]
20	119 [4.685]	83 [3.268]	38 [1.496]	28 [1.102]	56 [2.205]
30	139 [5.472]	93 [3.661]	48 [1.890]	38 [1.496]	66 [2.598]
40	159 [6.260]	103 [4.055]	58 [2.283]	48 [1.890]	76 [2.992]
50	179 [7.047]	113 [4.449]	68 [2.677]	58 [2.283]	86 [3.386]
60	199 [7.835]	123 [4.843]	78 [3.071]	68 [2.677]	96 [3.780]
70	219 [8.622]	133 [5.236]	88 [3.465]	78 [3.071]	106 [4.173]
75	229 [9.016]	138 [5.433]	93 [3.661]	83 [3.268]	111 [4.370]
80	239 [9.409]	143 [5.630]	98 [3.858]	88 [3.465]	116 [4.567]
90	259 [10.197]	153 [6.024]	108 [4.252]	98 [3.858]	126 [4.961]
100	279 [10.984]	163 [6.417]	118 [4.646]	108 [4.252]	136 [5.354]

Remarks
-BR: Rod side female thread, head side male thread specification.
-BH: Rod side male thread, head side female thread specification.
Calculated dimensions referring to the female and male thread dimensions in the above diagram.

Double acting double rod end type dimensions (mm [in.])

●BCD63
●BCDR63 (corrosion resistant specification)

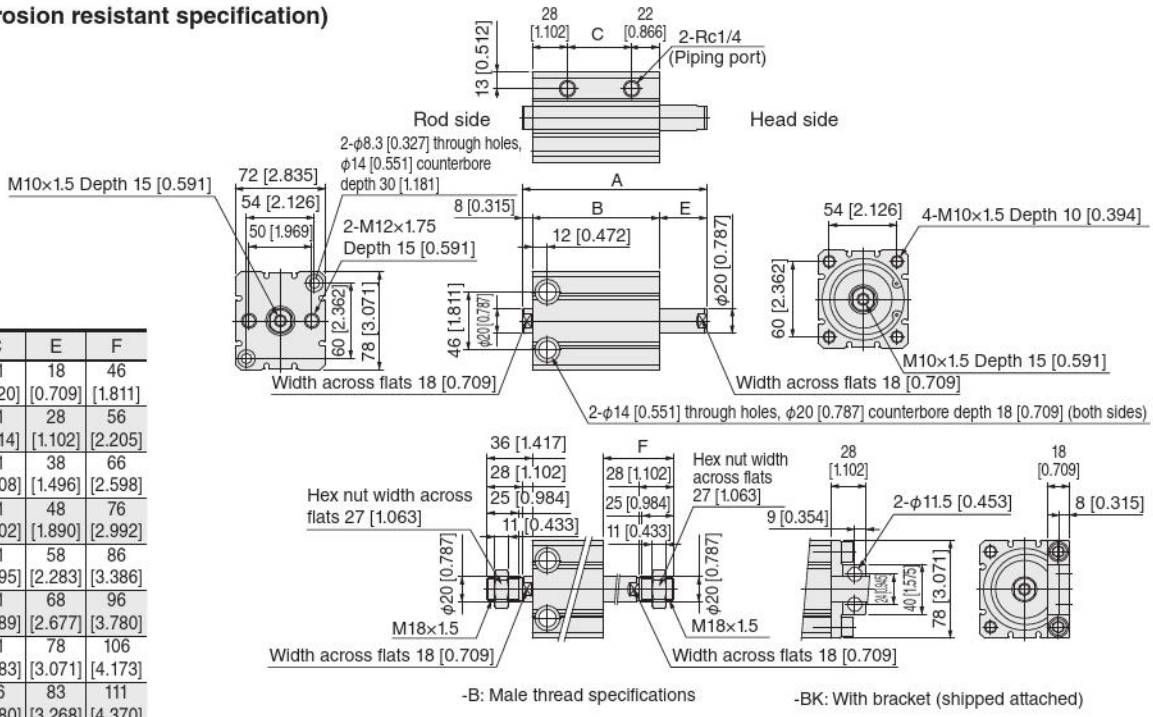

-B: Male thread specifications

-BK: With bracket (shipped attached)

Stroke	A	B	C	E	F
10	107 [4.213]	81 [3.189]	31 [1.220]	18 [0.709]	46 [1.811]
20	127 [5.000]	91 [3.583]	41 [1.614]	28 [1.102]	56 [2.205]
30	147 [5.787]	101 [3.976]	51 [2.008]	38 [1.496]	66 [2.598]
40	167 [6.575]	111 [4.370]	61 [2.402]	48 [1.890]	76 [2.992]
50	187 [7.362]	121 [4.764]	71 [2.795]	58 [2.283]	86 [3.386]
60	207 [8.150]	131 [5.157]	81 [3.189]	68 [2.677]	96 [3.780]
70	227 [8.937]	141 [5.551]	91 [3.583]	78 [3.071]	106 [4.173]
75	237 [9.331]	146 [5.748]	96 [3.780]	83 [3.268]	111 [4.370]
80	247 [9.724]	151 [5.945]	101 [3.976]	88 [3.465]	116 [4.567]
90	267 [10.512]	161 [6.339]	111 [4.370]	98 [3.858]	126 [4.961]
100	287 [11.299]	171 [6.732]	121 [4.764]	108 [4.252]	136 [5.354]

Remarks
-BR: Rod side female thread, head side male thread specification.
-BH: Rod side male thread, head side female thread specification.
Calculated dimensions referring to the female and male thread dimensions in the above diagram.

●BCD80
●BCDR80 (corrosion resistant specification)

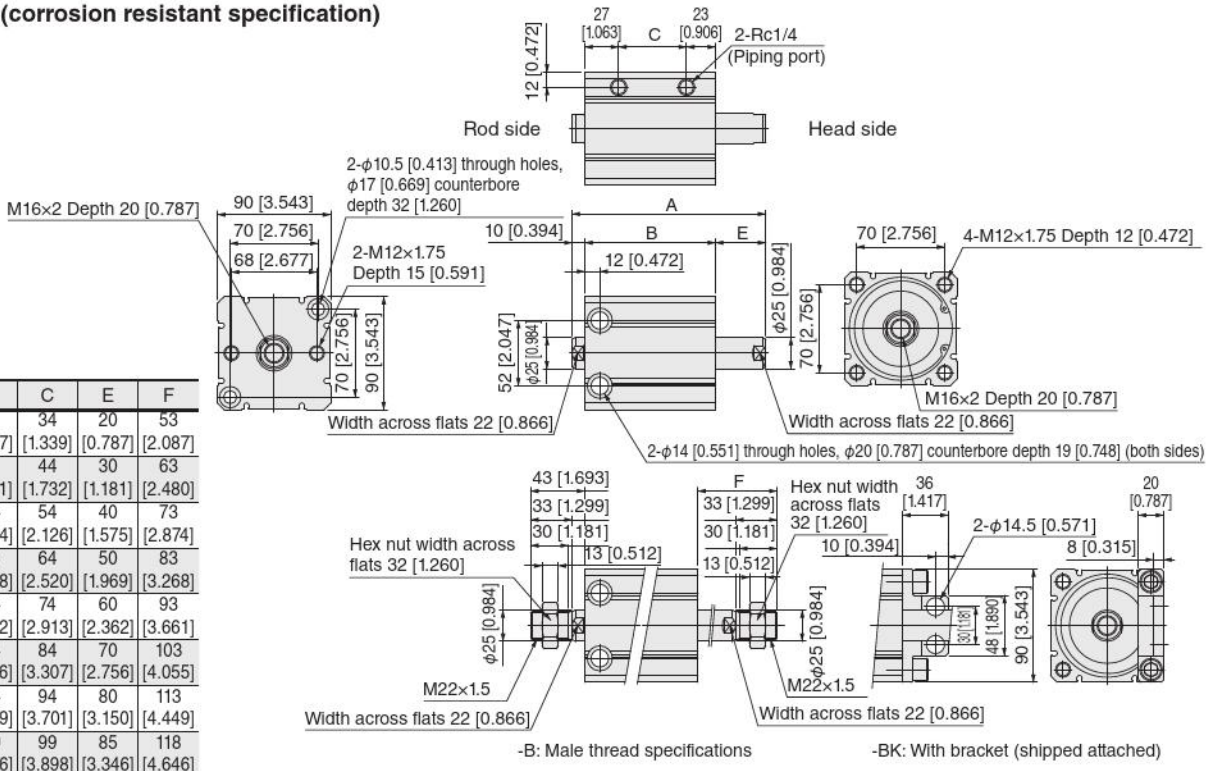

-B: Male thread specifications

-BK: With bracket (shipped attached)

Stroke	A	B	C	E	F
10	114 [4.488]	84 [3.307]	34 [1.339]	20 [0.787]	53 [2.087]
20	134 [5.276]	94 [3.701]	44 [1.732]	30 [1.181]	63 [2.480]
30	154 [6.063]	104 [4.094]	54 [2.126]	40 [1.575]	73 [2.874]
40	174 [6.850]	114 [4.488]	64 [2.520]	50 [1.969]	83 [3.268]
50	194 [7.638]	124 [4.882]	74 [2.913]	60 [2.362]	93 [3.661]
60	214 [8.425]	134 [5.276]	84 [3.307]	70 [2.756]	103 [4.055]
70	234 [9.213]	144 [5.669]	94 [3.701]	80 [3.150]	113 [4.449]
75	244 [9.606]	149 [5.866]	99 [3.898]	85 [3.346]	118 [4.646]
80	254 [10.000]	154 [6.063]	104 [4.094]	90 [3.543]	123 [4.843]
90	274 [10.787]	164 [6.457]	114 [4.488]	100 [3.937]	133 [5.236]
100	294 [11.575]	174 [6.850]	124 [4.882]	110 [4.331]	143 [5.630]

Remarks
-BR: Rod side female thread, head side male thread specification.
-BH: Rod side male thread, head side female thread specification.
Calculated dimensions referring to the female and male thread dimensions in the above diagram.

Double acting double rod end type dimensions (mm [in.])

●BCD100
●BCDR100 (corrosion resistant specification)

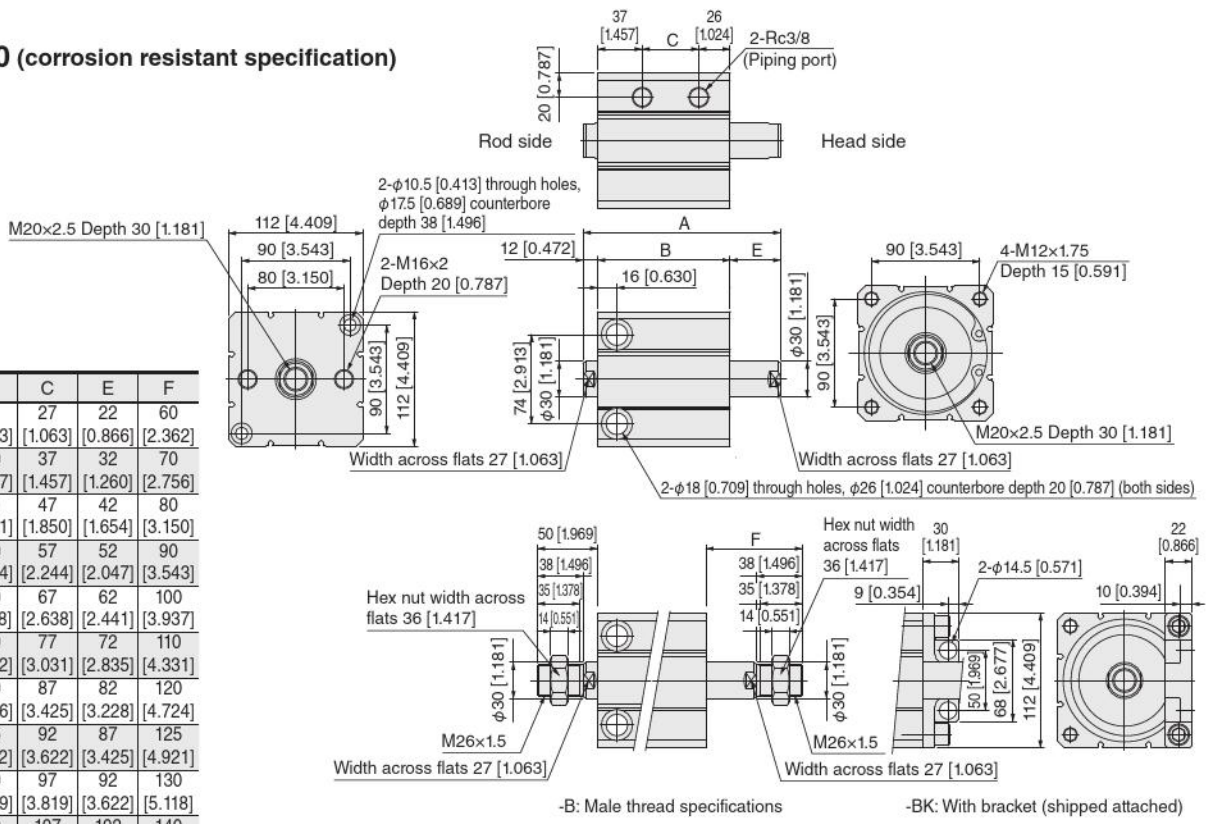

Stroke	A	B	C	E	F
10	124 [4.882]	90 [3.543]	27 [1.063]	22 [0.866]	60 [2.362]
20	144 [5.669]	100 [3.937]	37 [1.457]	32 [1.260]	70 [2.756]
30	164 [6.457]	110 [4.331]	47 [1.850]	42 [1.654]	80 [3.150]
40	184 [7.244]	120 [4.724]	57 [2.244]	52 [2.047]	90 [3.543]
50	204 [8.031]	130 [5.118]	67 [2.638]	62 [2.441]	100 [3.937]
60	224 [8.819]	140 [5.512]	77 [3.031]	72 [2.835]	110 [4.331]
70	244 [9.606]	150 [5.906]	87 [3.425]	82 [3.228]	120 [4.724]
75	254 [10.000]	155 [6.102]	92 [3.622]	87 [3.425]	125 [4.921]
80	264 [10.394]	160 [6.299]	97 [3.819]	92 [3.622]	130 [5.118]
90	284 [11.181]	170 [6.693]	107 [4.213]	102 [4.016]	140 [5.512]
100	304 [11.969]	180 [7.087]	117 [4.606]	112 [4.409]	150 [5.906]

Remarks
-BR: Rod side female thread, head side male thread specification.
-BH: Rod side male thread, head side female thread specification.
Calculated dimensions referring to the female and male thread dimensions in the above diagram.

●BCD125
●BCDR125 (corrosion resistant specification)

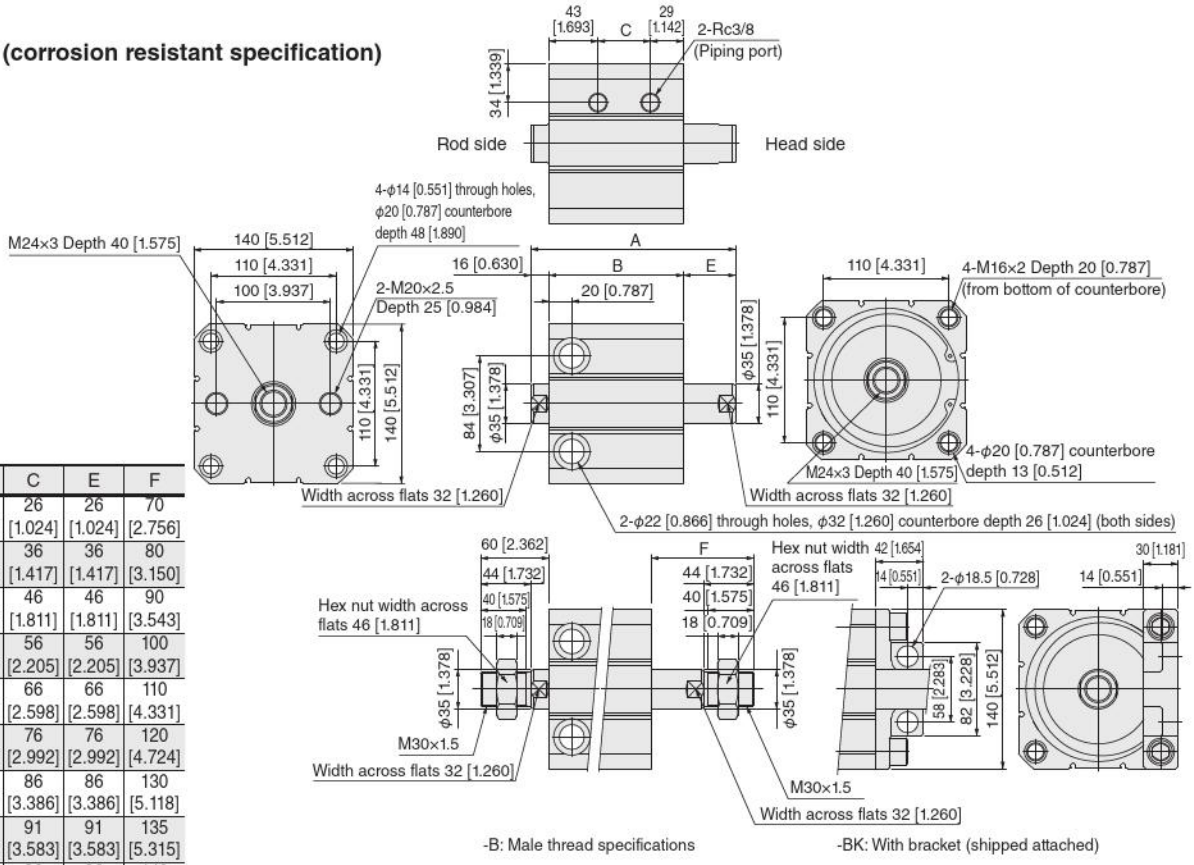

Stroke	A	B	C	E	F
10	140 [5.512]	98 [3.858]	26 [1.024]	26 [1.024]	70 [2.756]
20	160 [6.299]	108 [4.252]	36 [1.417]	36 [1.417]	80 [3.150]
30	180 [7.087]	118 [4.646]	46 [1.811]	46 [1.811]	90 [3.543]
40	200 [7.874]	128 [5.039]	56 [2.205]	56 [2.205]	100 [3.937]
50	220 [8.661]	138 [5.433]	66 [2.598]	66 [2.598]	110 [4.331]
60	240 [9.449]	148 [5.827]	76 [2.992]	76 [2.992]	120 [4.724]
70	260 [10.236]	158 [6.220]	86 [3.386]	86 [3.386]	130 [5.118]
75	270 [10.630]	163 [6.417]	91 [3.583]	91 [3.583]	135 [5.315]
80	280 [11.024]	168 [6.614]	96 [3.780]	96 [3.780]	140 [5.512]
90	300 [11.811]	178 [7.008]	106 [4.173]	106 [4.173]	150 [5.906]
100	320 [12.598]	188 [7.402]	116 [4.567]	116 [4.567]	160 [6.299]

Remarks
-BR: Rod side female thread, head side male thread specification.
-BH: Rod side male thread, head side female thread specification.
Calculated dimensions referring to the female and male thread dimensions in the above diagram.

Basic Cylinders

Cylinder with guide

Symbol

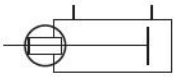

Specifications (standard, corrosion resistant, heat resistant specifications)

Item / Cylinder bore		8 [0.315]	12 [0.472]	16 [0.630]	20 [0.787]	25 [0.984]	32 [1.260]	40 [1.575]
Operating type		Double acting type						
Medium		Air						
Operating pressure range MPa [psi]	Standard, corrosion resistant specifications	0.2～0.7 [29 to 102]	0.1～0.7 [15 to 102]		0.08～0.7 [12 to 102]			
	Heat resistant specification	0.25 to 0.7 [36 to 102]	0.15～0.7 [22 to 102]					
Proof pressure MPa [psi]		1.05 [152]						
Operating temperature range °C [°F]		0 to 60 [32 to 140] (For heat resistant specification, 0 to 150 [32 to 302][Note])						
Operating speed range mm/s [in/sec]		50 to 500 [1.969 to 19.685] (For heat resistant specification, 100 to 300 [3.937 to 11.811])						
Cushion		Rubber bumper						
Lubrication		Not required						
Port size		M3×0.5	M5×0.8				Rc1/8	
Running parallelism mm [in]		0.1 [0.004] or less						
Allowable moment N·m [in·lbf] Values in parentheses are for heat resistant specification.	Pitching	0.12 [1.062] (0.11 [0.974])		0.40 [3.540] (0.35 [3.098])	1.50 [13.277] (0.88 [7.789])	2.18 [19.295] (1.37 [12.126])	4.46 [39.475] (3.56 [31.510])	6.70 [59.302] (6.32 [55.938])
	Rolling	0.12 [1.062] (0.11 [0.974])		0.40 [3.540] (0.35 [3.098])	1.80 [15.932] (0.88 [7.789])	19.295 (10.710)	4.46 [39.475] (2.99 [26.464])	8.00 [70.808] (5.30 [46.910])
	Yawing	0.21 [1.859] (0.18 [1.593])		0.68 [6.019] (0.60 [5.311])	2.20 [19.472] (1.25 [11.064])	4.18 [36.997] (2.30 [20.357])	7.31 [64.701] (6.00 [53.106])	13.70 [121.3] (11.04 [97.715])

Note: Heat resistant specification is without sensor switch.

Linear guide being used

Cylinder bore	Rail width	Manufacturer	
		Standard, corrosion resistant specifications	Heat resistant specification
ϕ8 [0.315], ϕ12 [0.472]	5 [0.197]	THK	THK
ϕ16 [0.630]	7 [0.276]		
ϕ20 [0.787]	9 [0.354]		
ϕ25 [0.984]	12 [0.472]		
ϕ32 [1.260]	15 [0.591]		IKO
ϕ40 [1.575]	20 [0.787]		

Cylinder bore and stroke

Cylinder bore	Standard stroke
8 [0.315], 12 [0.472], 16 [0.630], 20 [0.787], 25 [0.984]	5[Note], 10, 15[Note], 20, 25[Note], 30, 35[Note], 40, 45[Note], 50, 55[Note], 60
32 [1.260]	10, 15[Note], 20, 25[Note], 30, 35[Note], 40, 45[Note], 50, 55[Note], 60
40 [1.575]	10[Note], 15[Note], 20, 25[Note], 30, 35[Note], 40, 45[Note], 50, 55[Note], 60

Note: This stroke is available with collar insertion.

● Standard specifications

BC G [ ] [×] - [ ] - [ ] [ ] [ ]

Number of sensor switches
1: 1 sensor switch
2: 2 sensor switches
3: 2 sensor switches
⋮

Back side piping block Note 1
*** Available only in ϕ32 [1.260] and ϕ40 [1.575]**
Blank : Side piping
BP : Back side piping

Lead wire length
A: 1000 mm [39.370 in.]
B: 3000 mm [118.1 in.]
G: 300 mm [11.811 in.] with M8 connector, only on the **ZE175**, **ZE177**, **ZE275**, **ZE277**

Cylinder bore
×
Stroke
● See page 65 for cylinder bores and strokes.

Sensor switch model
Blank : No sensor switch
ZE135 : 2-lead wires, solid state type, horizontal lead wires
ZE155 : 3-lead wires, solid state NPN output type, horizontal lead wires
ZE175 : 3-lead wires, solid state PNP output type, horizontal lead wires
ZE235 : 2-lead wires, solid state type, vertical lead wires
ZE255 : 3-lead wires, solid state NPN output type, vertical lead wires
ZE275 : 3-lead wires, solid state PNP output type, vertical lead wires
ZE137 : 2-lead wires, 2-color LED solid state type, horizontal lead wires
ZE157 : 3-lead wires, 2-color LED solid state NPN output type, horizontal lead wires
ZE177 : 3-lead wires, 2-color LED solid state PNP output type, horizontal lead wires
ZE237 : 2-lead wires, 2-color LED solid state type, vertical lead wires
ZE257 : 3-lead wires, 2-color LED solid state NPN output type, vertical lead wires
ZE277 : 3-lead wires, 2-color LED solid state PNP output type, vertical lead wires
ZE101 : 2-lead wires, reed switch type without indicator, horizontal lead wires Note 2
ZE102 : 2-lead wires, reed switch type, horizontal lead wires Note 2
ZE201 : 2-lead wires, reed switch type without indicator, vertical lead wires Note 2
ZE202 : 2-lead wires, reed switch type, vertical lead wires Note 2

● For details on sensor switches, see page 94.

Locating pin hole
Blank : Without pin hole
N : With pin hole

G: Double acting type with guide

Basic Cylinders

Note 1: Only ϕ32 [1.260] and ϕ40 [1.575] diameter bore cylinders can be mounted with back side piping blocks. Back side and side piping are possible as standard for ϕ8 to ϕ25 [0.315 to 0.984] models.
2: Reed type sensor switches cannot be attached to cylinders that have ϕ8 [0.315] and ϕ12 [0.472] cylinder bores.

● Corrosion resistant specification (Change of material of piston rod, etc.)

BC G [ ] R [×] - [ ] - [ ] [ ] [ ]

Number of sensor switches
1: 1 sensor switch
2: 2 sensor switches
3: 3 sensor switches
⋮

R: **Corrosion resistant specification**

Back side piping block Note 1
*** Available only in ϕ32 [1.260] and ϕ40 [1.575]**
Blank : Side piping
BP : Back side piping

Lead wire length
A: 1000 mm [39.370 in.]
B: 3000 mm [118.1 in.]
G: 300 mm [11.811 in.] with M8 connector, only on the **ZE175**, **ZE177**, **ZE275**, **ZE277**

Cylinder bore
×
Stroke
● See page 65 for cylinder bores and strokes.

Sensor switch model
Blank : No sensor switch
ZE135 : 2-lead wires, solid state type, horizontal lead wires
ZE155 : 3-lead wires, solid state NPN output type, horizontal lead wires
ZE175 : 3-lead wires, solid state PNP output type, horizontal lead wires
ZE235 : 2-lead wires, solid state type, vertical lead wires
ZE255 : 3-lead wires, solid state NPN output type, vertical lead wires
ZE275 : 3-lead wires, solid state PNP output type, vertical lead wires
ZE137 : 2-lead wires, 2-color LED solid state type, horizontal lead wires
ZE157 : 3-lead wires, 2-color LED solid state NPN output type, horizontal lead wires
ZE177 : 3-lead wires, 2-color LED solid state PNP output type, horizontal lead wires
ZE237 : 2-lead wires, 2-color LED solid state type, vertical lead wires
ZE257 : 3-lead wires, 2-color LED solid state NPN output type, vertical lead wires
ZE277 : 3-lead wires, 2-color LED solid state PNP output type, vertical lead wires
ZE101 : 2-lead wires, reed switch type without indicator, horizontal lead wires Note 2
ZE102 : 2-lead wires, reed switch type, horizontal lead wires Note 2
ZE201 : 2-lead wires, reed switch type without indicator, vertical lead wires Note 2
ZE202 : 2-lead wires, reed switch type, vertical lead wires Note 2

● For details on sensor switches, see page 94.

Locating pin hole
Blank : Without pin hole
N : With pin hole

G: Double acting type with guide

Basic Cylinders

Note 1: Only ϕ32 [1.260] and ϕ40 [1.575] diameter bore cylinders can be mounted with back side piping blocks. Back side and side piping are possible as standard for ϕ8 to ϕ25 [0.315 to 0.984] models.
2: Reed type sensor switches cannot be attached to cylinders that have ϕ8 [0.315] and ϕ12 [0.472] cylinder bores.

Order Codes

● Heat resistant specification (Sensor switch cannot be attached.)

BC G □ F × - □

F: Heat resistant specification

Back side piping block[Note]
*** Available only in ϕ32 [1.260] and ϕ40 [1.575]**
Blank: Side piping
BP : Back side piping

Note: Only ϕ32 [1.260] and ϕ40 [1.575] diameter bore cylinders can be mounted with back side piping blocks. Back side and side piping are possible as standard for ϕ8 to ϕ25 [0.315 to 0.984] models.

Cylinder bore × Stroke

● See page 65 for cylinder bores and strokes.

Locating pin hole
Blank: Without pin hole
N : With pin hole

G: Double acting type with guide

Basic Cylinders

Mass

● Cylinder with guide

g [oz]

Model	Stroke											
	5	10	15	20	25	30	35	40	45	50	55	60
BCG8	56 [1.98]	54 [1.90]	68 [2.40]	66 [2.33]	80 [2.82]	78 [2.75]	92 [3.25]	90 [3.17]	104 [3.67]	102 [3.60]	116 [4.09]	114 [4.02]
BCG12	82 [2.89]	81 [2.86]	96 [3.39]	95 [3.35]	110 [3.88]	109 [3.84]	124 [4.37]	123 [4.34]	138 [4.87]	137 [4.83]	152 [5.36]	151 [5.33]
BCG16	133 [4.69]	131 [4.62]	155 [5.47]	153 [5.40]	178 [6.28]	176 [6.21]	200 [7.05]	198 [6.98]	222 [7.83]	220 [7.76]	245 [8.64]	243 [8.57]
BCG20	207 [7.30] (209 [7.37])	205 [7.23] (207 [7.30])	236 [8.32] (238 [8.40])	234 [8.25] (236 [8.32])	265 [9.35] (267 [9.42])	263 [9.28] (265 [9.35])	294 [10.37] (296 [10.44])	292 [10.30] (294 [10.37])	323 [11.39] (325 [11.46])	321 [11.32] (323 [11.39])	352 [12.42] (354 [12.49])	350 [12.35] (352 [12.42])
BCG25	321 [11.32] (330 [11.64])	317 [11.18] (326 [11.50])	366 [12.91] (375 [13.23])	362 [12.77] (371 [13.09])	411 [14.50] (420 [14.81])	407 [14.36] (416 [14.67])	456 [16.08] (465 [16.40])	452 [15.94] (461 [16.26])	501 [17.67] (510 [17.99])	497 [17.53] (506 [17.85])	546 [19.26] (555 [19.58])	542 [19.12] (551 [19.44])
BCG32	–	597 [21.06] (627 [22.12])	675 [23.81] (705 [24.87])	669 [23.60] (699 [24.66])	746 [26.31] (776 [27.37])	740 [26.10] (770 [27.16])	818 [28.85] (848 [29.91])	812 [28.64] (842 [29.70])	889 [31.36] (919 [32.42])	883 [31.15] (913 [32.20])	961 [33.90] (991 [34.96])	955 [33.69] (985 [34.74])
BCG40	–	1031 [36.37] (1075 [37.92])	1025 [36.16] (1069 [37.71])	1019 [35.94] (1063 [37.50])	1122 [39.58] (1166 [41.13])	1116 [39.37] (1160 [40.92])	1219 [43.00] (1263 [44.55])	1213 [42.79] (1257 [44.34])	1316 [46.42] (1360 [47.97])	1310 [46.21] (1354 [47.76])	1413 [49.84] (1457 [51.39])	1407 [49.63] (1451 [51.18])

Values in parentheses are mass of heat resistant specification.

In the case of back side piping specifications, add mass of 76 g [2.68 oz] for a ϕ32 [1.260] cylinder bore and 108 g [3.81 oz] for a ϕ40 [1.575] cylinder bore.

● Additional mass of sensor switches

ZE□□□A, **ZE□□□G**: 15 g [0.53 oz] **ZE□□□B**: 35 g [1.23 oz]

Inner construction

● ϕ8 [0.315]

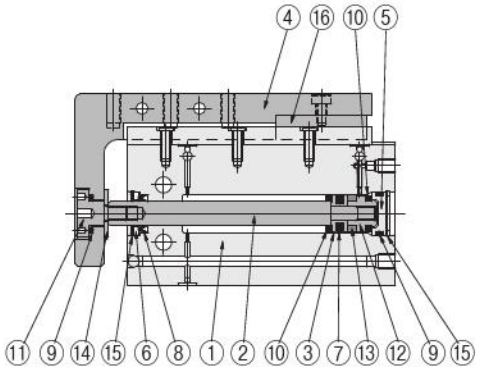

● ϕ12 to ϕ25 [0.472 to 0.984]

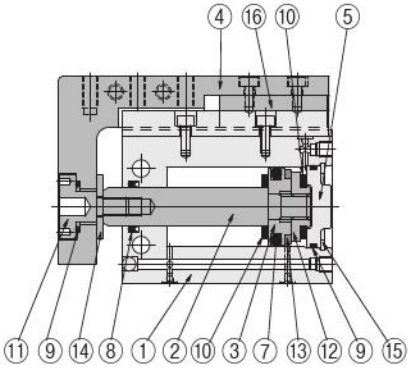

● ϕ32 [1.260], ϕ40 [1.575]

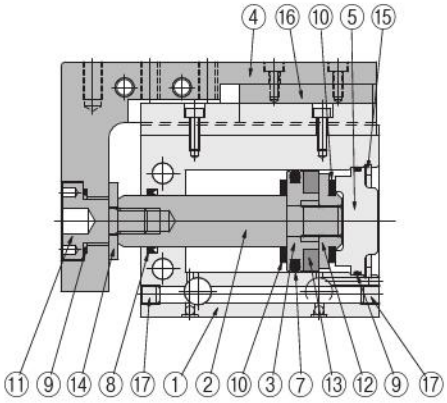

● **Mid-stroke models (Refer to double acting type with guide dimensions)**

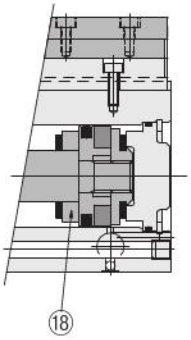

● **-BP: Back side piping specifications (ϕ32 [1.260], ϕ40 [1.575])**

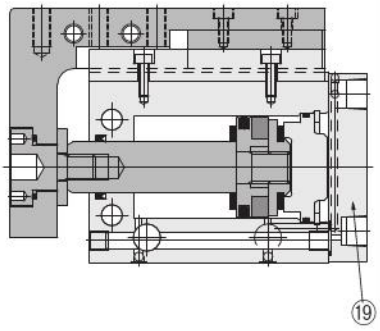

Major parts and materials (standard, corrosion resistant, heat resistant specifications)

No	Name	ϕ8 [0.315]	ϕ12 [0.472]	ϕ16 [0.630]	ϕ20 [0.787]	ϕ25 [0.984]	ϕ32 [1.260]	ϕ40 [1.575]
①	Cylinder body	Aluminum alloy (special anti-abrasion treated)						
②	Piston rod	Stainless steel					Carbon steel (Corrosion and heat resistant specifications are stainless steel.)	
③	Piston	Stainless steel		Aluminum alloy (anodized)				
④	Table	Aluminum alloy (anodized)						
⑤	Head cover	Aluminum alloy (anodized)						
⑥	Packing holder	Aluminum alloy (Anodized)	–	–	–	–	–	–
⑦	★Piston packing	Synthetic rubber (NBR) (heat resistant specification: FKM)						
⑧	★Rod packing	Synthetic rubber (NBR) (heat resistant specification: FKM)						
⑨	★O-ring	Synthetic rubber (NBR) (heat resistant specification: FKM)						
⑩	Bumper	Synthetic rubber (NBR) (heat resistant specification: FKM)						
⑪	End bolt	Stainless steel						
⑫	Support	Aluminum alloy (anodized)						
⑬	Magnet	Neodymium magnet (not attached to heat resistant specification)					Plastic magnet (not attached to heat resistant specification)	
⑭	Bolt retainer	Stainless steel						
⑮	★Retaining ring	Steel (Corrosion and heat resistant specifications are electroless nickel plated.)						
⑯	Linear guide	Stainless steel						
⑰	Plug	–	–	–	–	–	Stainless steel	Stainless steel
⑱	Collar	Aluminum alloy (anodized)						
⑲	★Back side piping block	–	–	–	–	–	Aluminum alloy (Anodized)	Aluminum alloy (Anodized)

Items indicated by a ★ are available as additional parts or in packing sets. For order codes, see pages 92 and 93.

Double acting type with guide dimensions (mm [in.])

- **BCG□8**
- **BCG□R8 (corrosion resistant specification)**
- **BCG□F8 (heat resistant specification)**

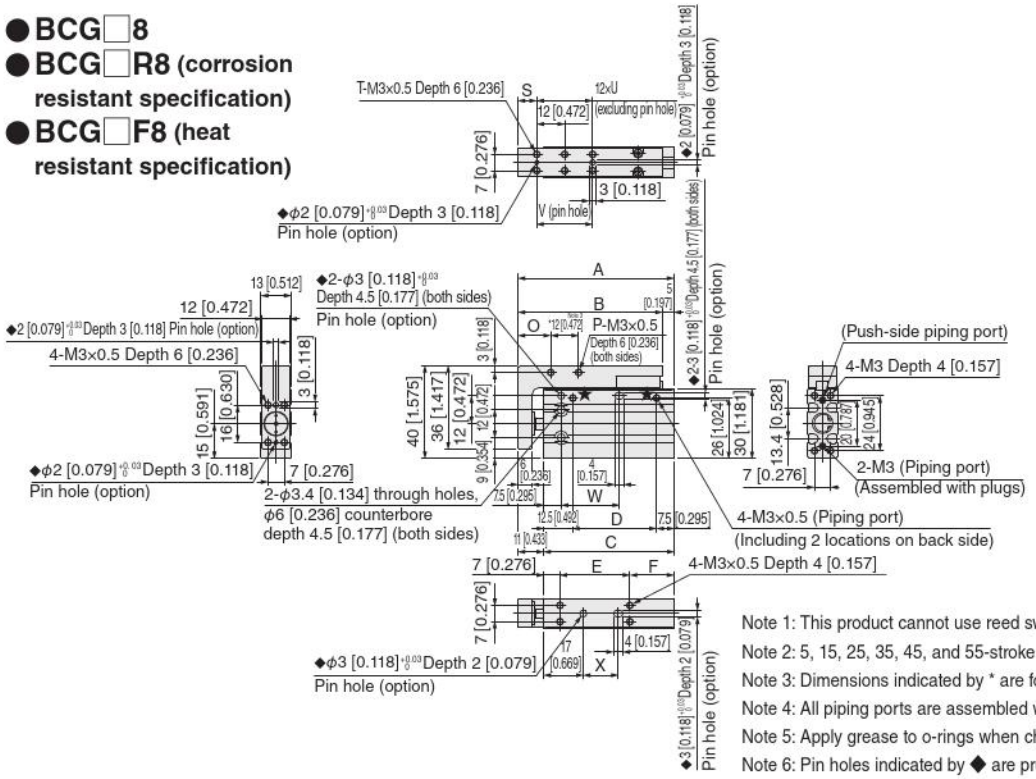

Note 1: This product cannot use reed switch type sensor switches.
Note 2: 5, 15, 25, 35, 45, and 55-stroke models are available with collar insertion.
Note 3: Dimensions indicated by * are for models with a stroke of 15 or more.
Note 4: All piping ports are assembled with plugs, except those indicated by ★.
Note 5: Apply grease to o-rings when changing plug assemblies.
Note 6: Pin holes indicated by ◆ are provided only when selected as an option (N).

Stroke	A	B	C	D	E	F	O	P	S	T	U	V	W	X
5, 10	47 [1.850]	42 [1.654]	36 [1.417]	16 [0.630]	15 [0.591]	14 [0.551]	10 [0.394]	2 [0.079]	5 [0.197]	4 [0.157]	–	12 [0.472]	15 [0.591]	10 [0.394]
15, 20	57 [2.244]	52 [2.047]	46 [1.811]	26 [1.024]	20 [0.787]	19 [0.748]	14 [0.551]	4 [0.157]	8 [0.315]	4 [0.157]	–	12 [0.472]	15 [0.591]	15 [0.591]
25, 30	67 [2.638]	62 [2.441]	56 [2.205]	36 [1.417]	30 [1.181]	19 [0.748]	14 [0.551]	4 [0.157]	8 [0.315]	6 [0.236]	2 [0.079]	24 [0.945]	25 [0.984]	15 [0.591]
35, 40	77 [3.031]	72 [2.835]	66 [2.598]	46 [1.811]	40 [1.575]	19 [0.748]	14 [0.551]	4 [0.157]	8 [0.315]	8 [0.315]	3 [0.118]	24 [0.945]	25 [0.984]	25 [0.984]
45, 50	87 [3.425]	82 [3.228]	76 [2.992]	56 [2.205]	50 [1.969]	19 [0.748]	14 [0.551]	4 [0.157]	8 [0.315]	10 [0.394]	4 [0.157]	36 [1.417]	35 [1.378]	35 [1.378]
55, 60	97 [3.819]	92 [3.622]	86 [3.386]	66 [2.598]	60 [2.362]	19 [0.748]	14 [0.551]	4 [0.157]	8 [0.315]	12 [0.472]	5 [0.197]	36 [1.417]	35 [1.378]	45 [1.772]

- **BCG□12**
- **BCG□R12 (corrosion resistant specification)**
- **BCG□F12 (heat resistant specification)**

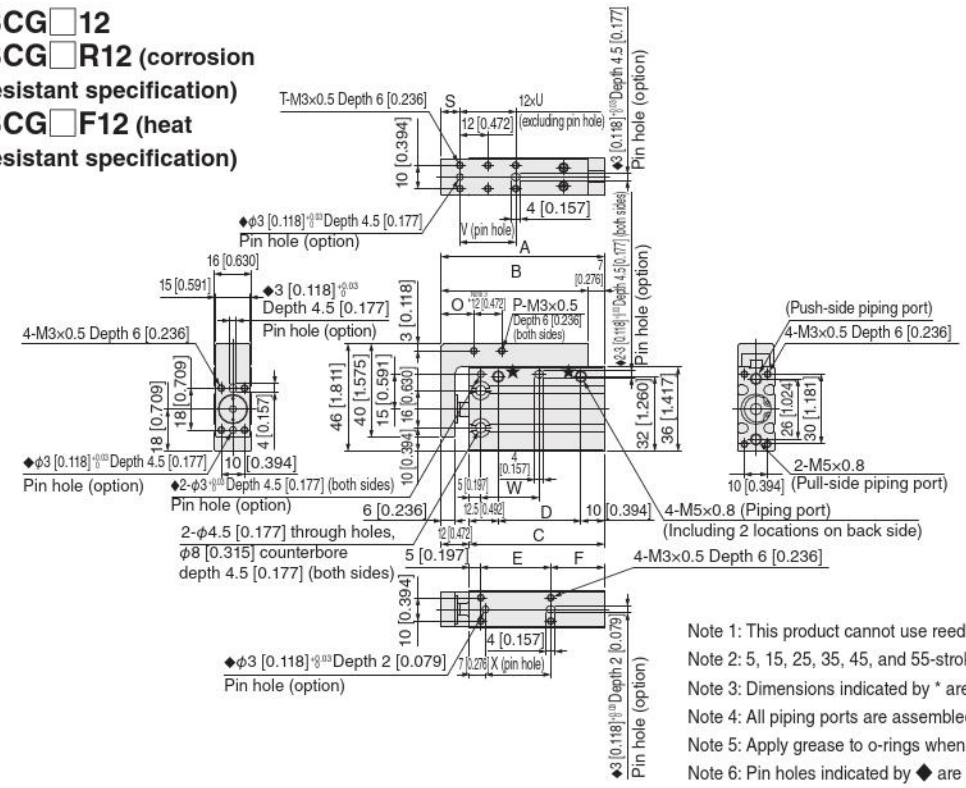

Note 1: This product cannot use reed switch type sensor switches.
Note 2: 5, 15, 25, 35, 45, and 55-stroke models are available with collar insertion.
Note 3: Dimensions indicated by * are for models with a stroke of 15 or more.
Note 4: All piping ports are assembled with plugs, except those indicated by ★.
Note 5: Apply grease to o-rings when changing plug assemblies.
Note 6: Pin holes indicated by ◆ are provided only when selected as an option (N).

Stroke	A	B	C	D	E	F	O	P	S	T	U	V	W	X
5, 10	50 [1.969]	43 [1.693]	38 [1.496]	15.5 [0.610]	15 [0.591]	18 [0.709]	10 [0.394]	2 [0.079]	5 [0.197]	4 [0.157]	–	12 [0.472]	15 [0.591]	13 [0.512]
15, 20	60 [2.362]	53 [2.087]	48 [1.890]	25.5 [1.004]	20 [0.787]	23 [0.906]	14 [0.551]	4 [0.157]	8 [0.315]	4 [0.157]	–	12 [0.472]	15 [0.591]	18 [0.709]
25, 30	70 [2.756]	63 [2.480]	58 [2.283]	35.5 [1.398]	30 [1.181]	23 [0.906]	14 [0.551]	4 [0.157]	8 [0.315]	6 [0.236]	2 [0.079]	24 [0.945]	25 [0.984]	28 [1.102]
35, 40	80 [3.150]	73 [2.874]	68 [2.677]	45.5 [1.791]	40 [1.575]	23 [0.906]	14 [0.551]	4 [0.157]	8 [0.315]	8 [0.315]	3 [0.118]	24 [0.945]	25 [0.984]	38 [1.496]
45, 50	90 [3.543]	83 [3.268]	78 [3.071]	55.5 [2.185]	50 [1.969]	23 [0.906]	14 [0.551]	4 [0.157]	8 [0.315]	10 [0.394]	4 [0.157]	36 [1.417]	35 [1.378]	48 [1.890]
55, 60	100 [3.937]	93 [3.661]	88 [3.465]	65.5 [2.579]	60 [2.362]	23 [0.906]	14 [0.551]	4 [0.157]	8 [0.315]	12 [0.472]	5 [0.197]	36 [1.417]	35 [1.378]	58 [2.283]

Double acting type with guide dimensions (mm [in.])

- **BCG□16**
- **BCG□R16 (corrosion resistant specification)**
- **BCG□F16 (heat resistant specification)**

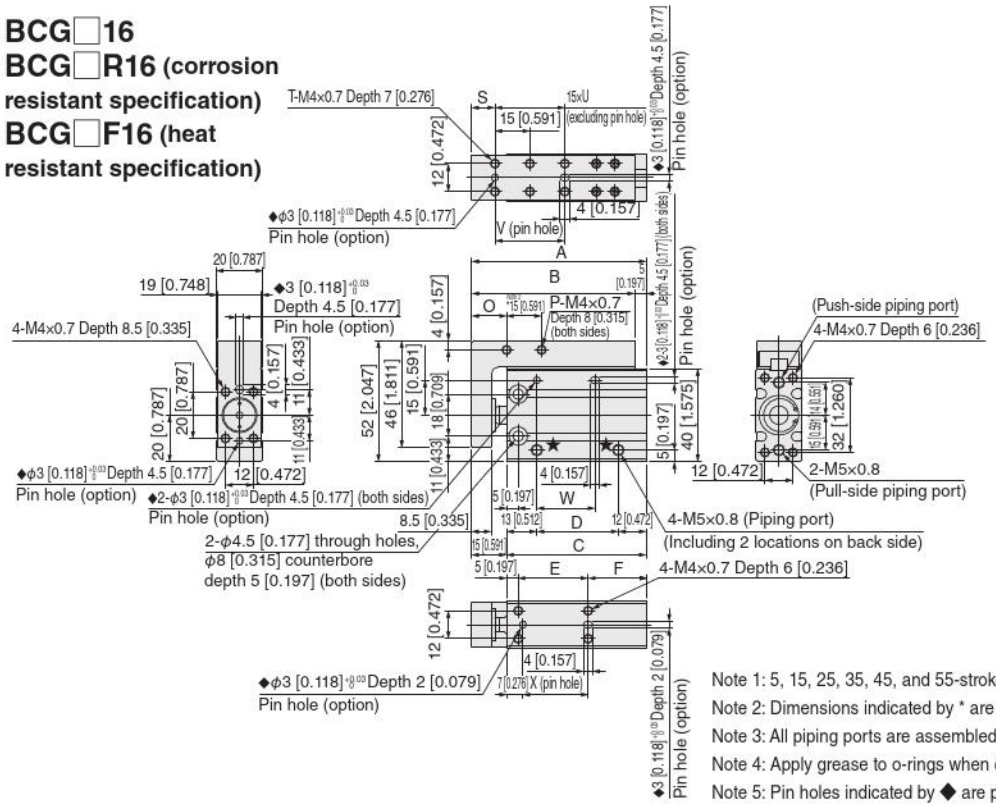

Note 1: 5, 15, 25, 35, 45, and 55-stroke models are available with collar insertion.
Note 2: Dimensions indicated by * are for models with a stroke of 15 or more.
Note 3: All piping ports are assembled with plugs, except those indicated by ★.
Note 4: Apply grease to o-rings when changing plug assemblies.
Note 5: Pin holes indicated by ◆ are provided only when selected as an option (N).

Stroke	A	B	C	D	E	F	O	P	S	T	U	V	W	X
5, 10	55 [2.165]	50 [1.969]	40 [1.575]	15 [0.591]	15 [0.591]	20 [0.787]	12 [0.472]	2 [0.079]	5 [0.197]	4 [0.157]	–	15 [0.591]	15 [0.591]	13 [0.512]
15, 20	65 [2.559]	60 [2.362]	50 [1.969]	25 [0.984]	20 [0.787]	25 [0.984]	15 [0.591]	4 [0.157]	10 [0.394]	4 [0.157]	–	15 [0.591]	15 [0.591]	18 [0.709]
25, 30	75 [2.953]	70 [2.756]	60 [2.362]	35 [1.378]	30 [1.181]	25 [0.984]	15 [0.591]	4 [0.157]	10 [0.394]	6 [0.236]	2 [0.079]	30 [1.181]	25 [0.984]	28 [1.102]
35, 40	85 [3.346]	80 [3.150]	70 [2.756]	45 [1.772]	40 [1.575]	25 [0.984]	15 [0.591]	4 [0.157]	10 [0.394]	6 [0.236]	2 [0.079]	30 [1.181]	25 [0.984]	38 [1.496]
45, 50	95 [3.740]	90 [3.543]	80 [3.150]	55 [2.165]	50 [1.969]	25 [0.984]	15 [0.591]	4 [0.157]	10 [0.394]	8 [0.315]	3 [0.118]	45 [1.772]	35 [1.378]	48 [1.890]
55, 60	105 [4.134]	100 [3.937]	90 [3.543]	65 [2.559]	60 [2.362]	25 [0.984]	15 [0.591]	4 [0.157]	10 [0.394]	10 [0.394]	4 [0.157]	45 [1.772]	35 [1.378]	58 [2.283]

- **BCG□20**
- **BCG□R20 (corrosion resistant specification)**
- **BCG□F20 (heat resistant specification)**

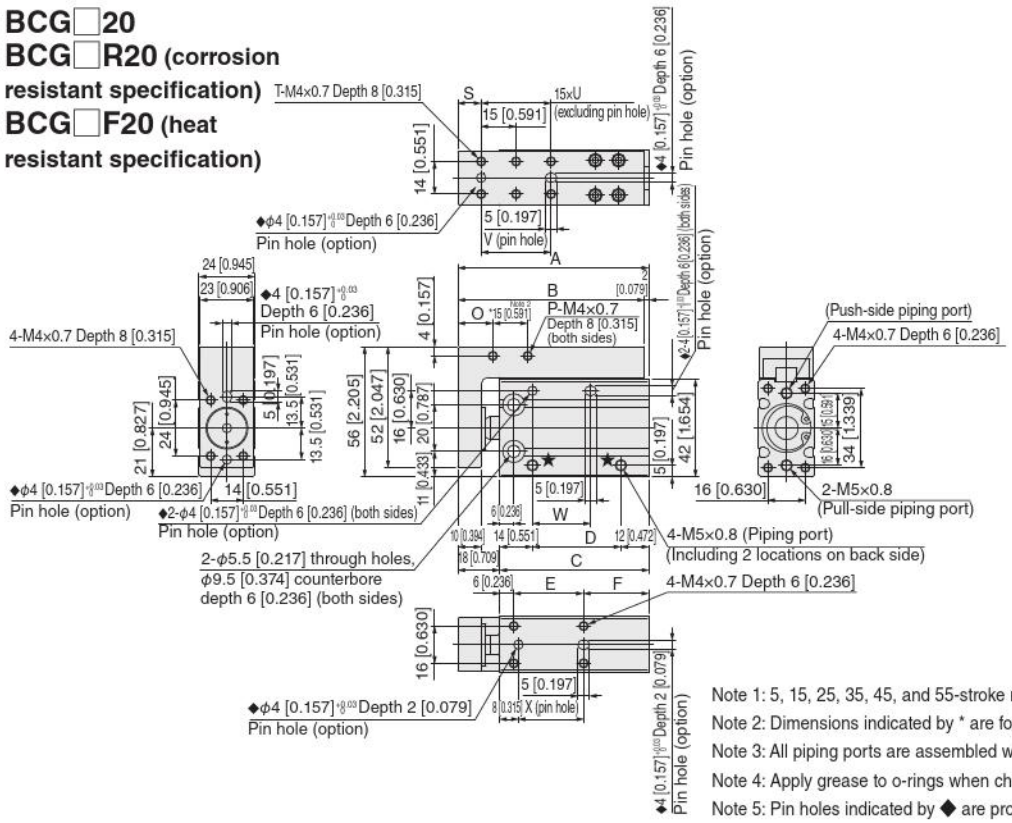

Note 1: 5, 15, 25, 35, 45, and 55-stroke models are available with collar insertion.
Note 2: Dimensions indicated by * are for models with a stroke of 15 or more.
Note 3: All piping ports are assembled with plugs, except those indicated by ★.
Note 4: Apply grease to o-rings when changing plug assemblies.
Note 5: Pin holes indicated by ◆ are provided only when selected as an option (N).

Stroke	A	B	C	D	E	F	O	P	S	T	U	V	W	X
5, 10	62 [2.441]	60 [2.362]	44 [1.732]	18 [0.709]	15 [0.591]	23 [0.906]	12 [0.472]	2 [0.079]	5 [0.197]	4 [0.157]	–	15 [0.591]	15 [0.591]	13 [0.512]
15, 20	72 [2.835]	70 [2.756]	54 [2.126]	28 [1.102]	20 [0.787]	28 [1.102]	15 [0.591]	4 [0.157]	10 [0.394]	4 [0.157]	–	15 [0.591]	15 [0.591]	18 [0.709]
25, 30	82 [3.228]	80 [3.150]	64 [2.520]	38 [1.496]	30 [1.181]	28 [1.102]	15 [0.591]	4 [0.157]	10 [0.394]	6 [0.236]	2 [0.079]	30 [1.181]	25 [0.984]	28 [1.102]
35, 40	92 [3.622]	90 [3.543]	74 [2.913]	48 [1.890]	40 [1.575]	28 [1.102]	15 [0.591]	4 [0.157]	10 [0.394]	6 [0.236]	2 [0.079]	30 [1.181]	25 [0.984]	38 [1.496]
45, 50	102 [4.016]	100 [3.937]	84 [3.307]	58 [2.283]	50 [1.969]	28 [1.102]	15 [0.591]	4 [0.157]	10 [0.394]	8 [0.315]	3 [0.118]	45 [1.772]	35 [1.378]	48 [1.890]
55, 60	112 [4.409]	110 [4.331]	94 [3.701]	68 [2.677]	60 [2.362]	28 [1.102]	15 [0.591]	4 [0.157]	10 [0.394]	10 [0.394]	4 [0.157]	45 [1.772]	35 [1.378]	58 [2.283]

Double acting type with guide dimensions (mm [in.])

- **BCG□25**
- **BCG□R25 (corrosion resistant specification)**
- **BCG□F25 (heat resistant specification)**

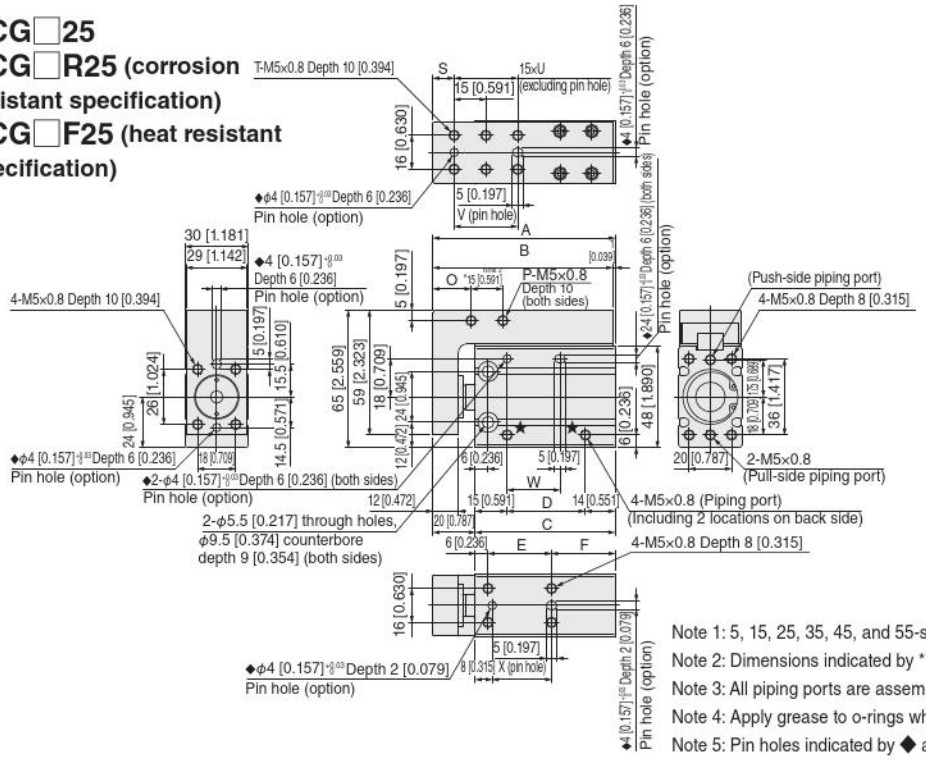

Note 1: 5, 15, 25, 35, 45, and 55-stroke models are available with collar insertion.
Note 2: Dimensions indicated by * are for models with a stroke of 15 or more.
Note 3: All piping ports are assembled with plugs, except those indicated by ★.
Note 4: Apply grease to o-rings when changing plug assemblies.
Note 5: Pin holes indicated by ◆ are provided only when selected as an option (N).

Stroke	A	B	C	D	E	F	O	P	S	T	U	V	W	X
5, 10	66 [2.598]	65 [2.559]	46 [1.811]	17 [0.669]	15 [0.591]	25 [0.984]	12 [0.472]	2 [0.079]	5 [0.197]	4 [0.157]	–	15 [0.591]	15 [0.591]	15 [0.591]
15, 20	76 [2.992]	75 [2.953]	56 [2.205]	27 [1.063]	20 [0.787]	30 [1.181]	18 [0.709]	4 [0.157]	10 [0.394]	4 [0.157]	–	15 [0.591]	15 [0.591]	18 [0.709]
25, 30	86 [3.386]	85 [3.346]	66 [2.598]	37 [1.457]	30 [1.181]	30 [1.181]	18 [0.709]	4 [0.157]	10 [0.394]	6 [0.236]	2 [0.079]	30 [1.181]	25 [0.984]	28 [1.102]
35, 40	96 [3.780]	95 [3.740]	76 [2.992]	47 [1.850]	40 [1.575]	30 [1.181]	18 [0.709]	4 [0.157]	10 [0.394]	6 [0.236]	2 [0.079]	30 [1.181]	25 [0.984]	38 [1.496]
45, 50	106 [4.173]	105 [4.134]	86 [3.386]	57 [2.244]	50 [1.969]	30 [1.181]	18 [0.709]	4 [0.157]	10 [0.394]	8 [0.315]	3 [0.118]	45 [1.772]	35 [1.378]	48 [1.890]
55, 60	116 [4.567]	115 [4.528]	96 [3.780]	67 [2.638]	60 [2.362]	30 [1.181]	18 [0.709]	4 [0.157]	10 [0.394]	10 [0.394]	4 [0.157]	45 [1.772]	35 [1.378]	58 [2.283]

- **BCG□32**
- **BCG□R32 (corrosion resistant specification)**
- **BCG□F32 (heat resistant specification)**

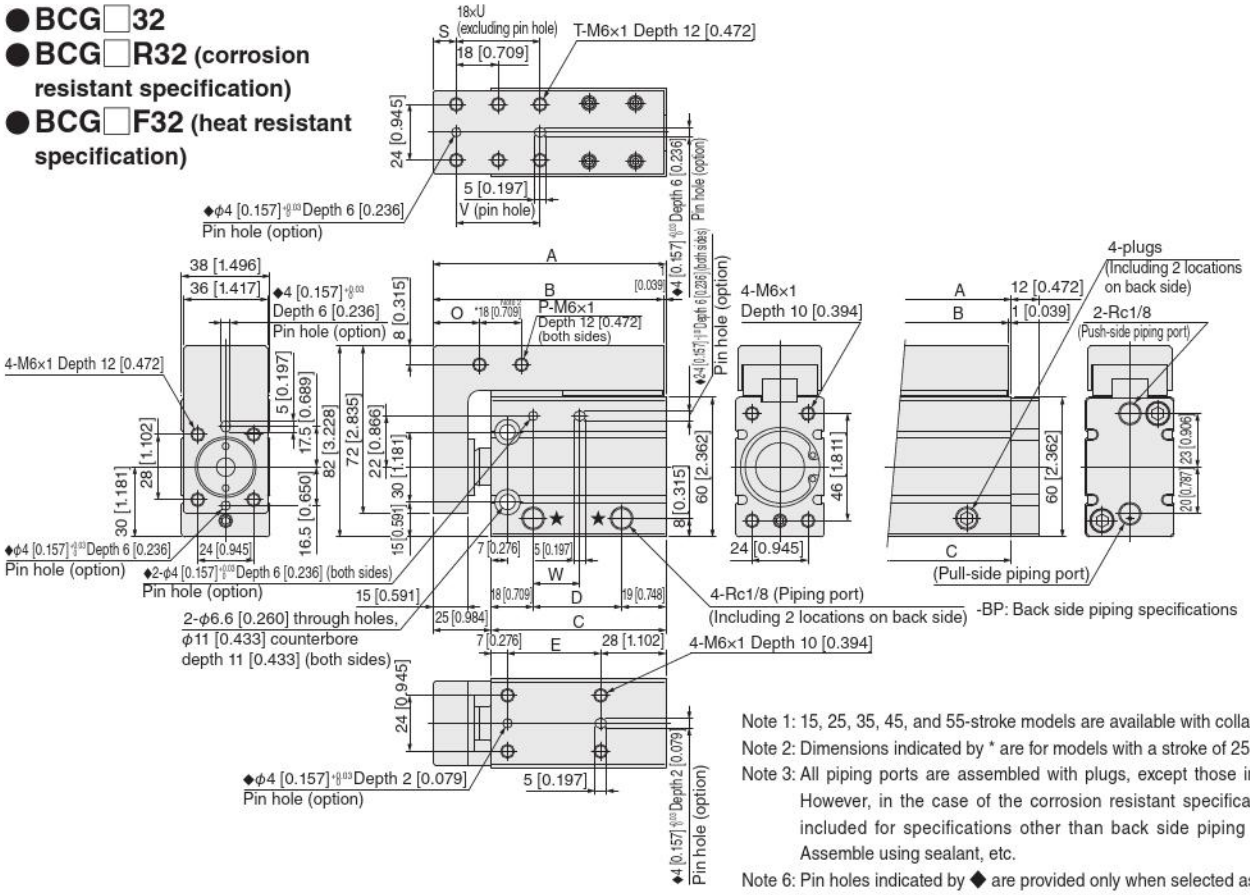

Note 1: 15, 25, 35, 45, and 55-stroke models are available with collar insertion.
Note 2: Dimensions indicated by * are for models with a stroke of 25 or more.
Note 3: All piping ports are assembled with plugs, except those indicated by ★. However, in the case of the corrosion resistant specification, plugs are included for specifications other than back side piping specifications. Assemble using sealant, etc.
Note 6: Pin holes indicated by ◆ are provided only when selected as an option (N).

Stroke	A	B	C	D	E	O	P	S	T	U	V	W
10	80 [3.150]	79 [3.110]	55 [2.165]	18 [0.709]	20 [0.787]	16 [0.630]	2 [0.079]	6 [0.236]	4 [0.157]	–	18 [0.709]	20 [0.787]
15, 20	90 [3.543]	89 [3.504]	65 [2.559]	28 [1.102]	30 [1.181]	20 [0.787]	2 [0.079]	10 [0.394]	4 [0.157]	–	18 [0.709]	20 [0.787]
25, 30	100 [3.937]	99 [3.898]	75 [2.953]	38 [1.496]	40 [1.575]	20 [0.787]	4 [0.157]	10 [0.394]	6 [0.236]	2 [0.079]	36 [1.417]	30 [1.181]
35, 40	110 [4.331]	109 [4.291]	85 [3.346]	48 [1.890]	50 [1.969]	20 [0.787]	4 [0.157]	10 [0.394]	6 [0.236]	2 [0.079]	36 [1.417]	30 [1.181]
45, 50	120 [4.724]	119 [4.685]	95 [3.740]	58 [2.283]	60 [2.362]	20 [0.787]	4 [0.157]	10 [0.394]	8 [0.315]	3 [0.118]	54 [2.126]	40 [1.575]
55, 60	130 [5.118]	129 [5.079]	105 [4.134]	68 [2.677]	70 [2.756]	20 [0.787]	4 [0.157]	10 [0.394]	8 [0.315]	3 [0.118]	54 [2.126]	40 [1.575]

Double acting type with guide dimensions (mm [in.])

- **BCG□40**
- **BCG□R40 (corrosion resistant specification)**
- **BCG□F40 (heat resistant specification)**

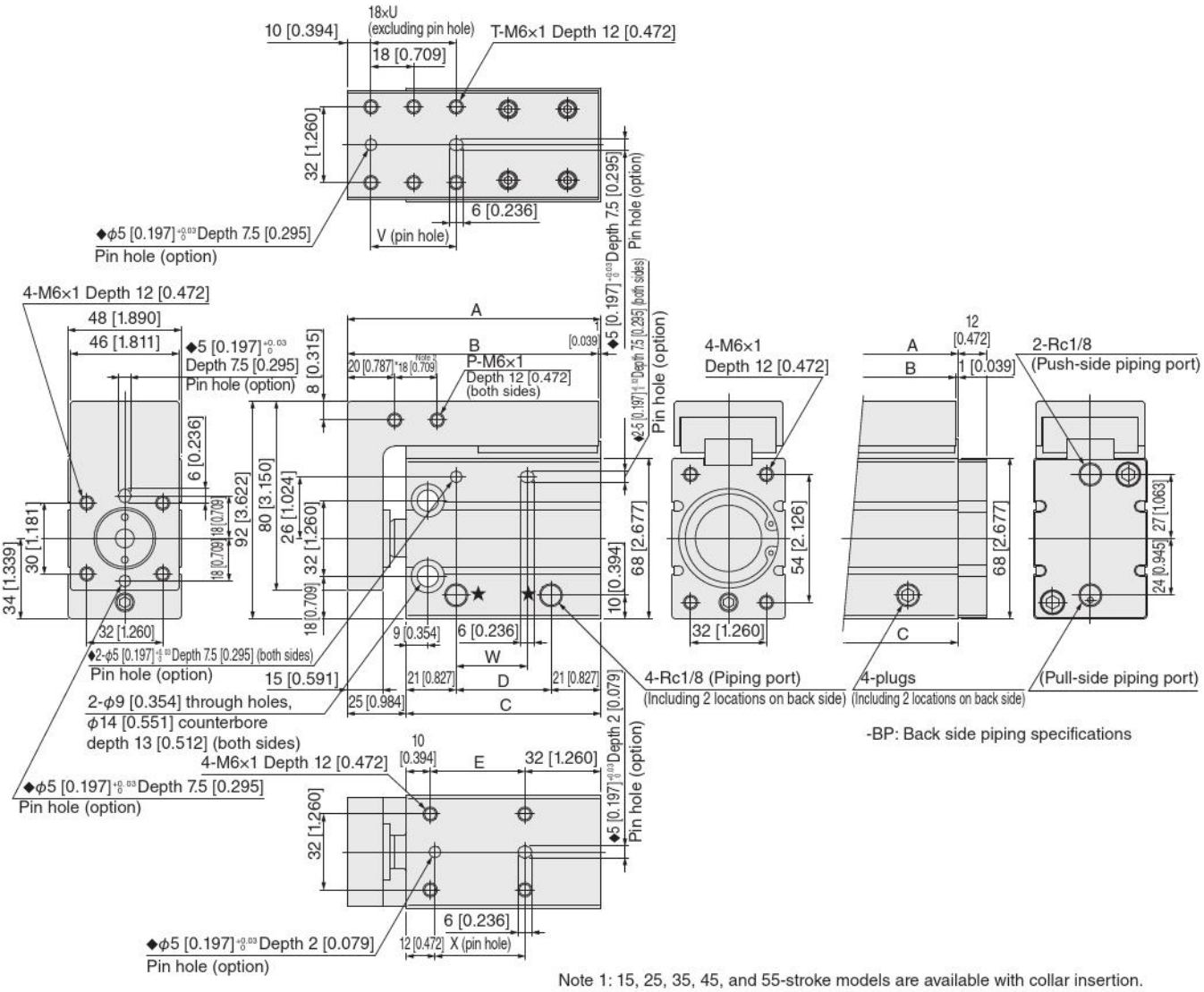

Note 1: 15, 25, 35, 45, and 55-stroke models are available with collar insertion.

Note 2: Dimensions indicated by * are for models with a stroke of 25 or more.

Note 3: All piping ports are assembled with plugs, except those indicated by ★. However, in the case of the corrosion resistant specification, plugs are included for specifications other than back side piping specifications. Assemble using sealant, etc.

Note 6: Pin holes indicated by ◆ are provided only when selected as an option (N).

Stroke	A	B	C	D	E	P	T	U	V	W	X
10, 15, 20	97 [3.819]	96 [3.780]	72 [2.835]	30 [1.181]	30 [1.181]	2 [0.079]	4 [0.157]	–	18 [0.709]	25 [0.984]	28 [1.102]
25, 30	107 [4.213]	106 [4.173]	82 [3.228]	40 [1.575]	40 [1.575]	4 [0.157]	6 [0.236]	2 [0.079]	36 [1.417]	30 [1.181]	38 [1.496]
35, 40	117 [4.606]	116 [4.567]	92 [3.622]	50 [1.969]	50 [1.969]	4 [0.157]	6 [0.236]	2 [0.079]	36 [1.417]	30 [1.181]	48 [1.890]
45, 50	127 [5.000]	126 [4.961]	102 [4.016]	60 [2.362]	60 [2.362]	4 [0.157]	8 [0.315]	3 [0.118]	54 [2.126]	40 [1.575]	58 [2.283]
55, 60	137 [5.394]	136 [5.354]	112 [4.409]	70 [2.756]	70 [2.756]	4 [0.157]	8 [0.315]	3 [0.118]	54 [2.126]	40 [1.575]	68 [2.677]

Basic Cylinders

Clean system compatible cylinders
Double acting type (single rod)

Symbol

● Double acting type

Without dust collection port

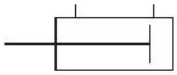

With dust collection port

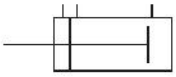

Specifications

● Double acting type (clean room specification)

Item / Cylinder bore		6 [0.236] Note 1	8 [0.315] Note 1	10 [0.394]	12 [0.472]	16 [0.630]	20 [0.787]	25 [0.984]	32 [1.260]	40 [1.575]	50 [1.969]	63 [2.480]
Operating type		Double acting type										
Medium		Air										
Operating pressure range MPa [psi]		0.12 to 0.7 [17 to 102]		0.06 to 0.7 [9 to 102]			0.05 to 0.7 [7 to 102]					
Proof pressure MPa [psi]		1.05 [152]										
Operating temperature range °C [°F]		0 to 60 [32 to 140]										
Operating speed range mm/s [in/sec]		10 to 300 [0.394 to 11.811]										
Cushion		Rubber bumper										
Lubrication		No										
Port size		M3×0.5			M5×0.8				Rc1/8			Rc1/4
Clean room rating Note 2	With dust collection port	–		Class 5 equivalent (FED-STD Class 1000 equivalent) Note 3								
	Without dust collection port	Class 6 equivalent (FED-STD Class 1000 equivalent) Note 3										

Note 1: Cylinders with dust collection ports not available for cylinder bores ϕ6 [0.236] and ϕ8 [0.315].
2: Koganei standard. For "with dust collection port," in the case of vacuum suction from dust collection port.
3: FED-STD was abolished as of November 2001, and it is designed here for reference purpose.

Cylinder bore and stroke

● Double acting type

Cylinder bore	Standard stroke	Maximum available stroke
6 [0.236] Note 1, 8 [0.315] Note 1, 10 [0.394]	5, 10, 15, 20, 25, 30	50
12 [0.472], 16 [0.630]	5, 10, 15, 20, 25, 30, 35, 40, 45, 50	100
20 [0.787], 25 [0.984]	5 Note 2, 10, 15, 20, 25, 30, 35, 40, 45, 50, 55, 60, 70, 75, 80, 90, 100	125
32 [1.260], 40 [1.575]	10, 15, 20, 25, 30, 35, 40, 45, 50, 55, 60, 70, 75, 80, 90, 100	200
50 [1.969], 63 [2.480]	10, 15, 20, 25, 30, 35, 40, 45, 50, 55, 60, 70, 75, 80, 90, 100	200

Note 1: Cylinders with dust collection ports not available for cylinder bores ϕ6 [0.236] and ϕ8 [0.315].
2: This stroke is available with collar insertion.

Order Codes (Clean system compatible cylinders)

■ Double acting type (single rod)

□ - BC × - □ - □ - □ □ □

Number of sensor switches
1: 1 sensor switch
2: 2 sensor switches
3: 3 sensor switches
⋮

Piston rod end shape
Blank: Female thread
B : Male thread

Bracket
Blank: No bracket
BK : With bracket Note 1

Lead wire length
A: 1000 mm
B: 3000 mm
G: 300 mm [11.811 in.] with M8 connector, only on the **ZE175**, **ZE177**, **ZE275**, **ZE277**

Cylinder bore
×
Stroke

● See page 73 for cylinder bores and strokes.

Note: Cylinder bores ϕ6 and ϕ8 not available for types with dust collection port.

Sensor switch model
Blank : No sensor switch
ZE135 : 2-lead wires, solid state type, horizontal lead wires
ZE155 : 3-lead wires, solid state NPN output type, horizontal lead wires
ZE175 : 3-lead wires, solid state PNP output type, horizontal lead wires
ZE235 : 2-lead wires, solid state type, vertical lead wires
ZE255 : 3-lead wires, solid state NPN output type, vertical lead wires
ZE275 : 3-lead wires, solid state PNP output type, vertical lead wires
ZE137 : 2-lead wires, 2-color LED solid state type, horizontal lead wires
ZE157 : 3-lead wires, 2-color LED solid state NPN output type, horizontal lead wires
ZE177 : 3-lead wires, 2-color LED solid state PNP output type, horizontal lead wires
ZE237 : 2-lead wires, 2-color LED solid state type, vertical lead wires
ZE257 : 3-lead wires, 2-color LED solid state NPN output type, vertical lead wires
ZE277 : 3-lead wires, 2-color LED solid state PNP output type, vertical lead wires
ZE101 : 2-lead wires, reed switch type without indicator, horizontal lead wires Note 2
ZE102 : 2-lead wires, reed switch type, horizontal lead wires Note 2
ZE201 : 2-lead wires, reed switch type without indicator, vertical lead wires Note 2
ZE202 : 2-lead wires, reed switch type, vertical lead wires Note 2

● For details on sensor switches, see page 94.

Basic Cylinders

Clean system compatible cylinders
CSL: Without dust collection port <Cylinder bore: ϕ6 to ϕ63>
CS : With dust collection port <Cylinder bore: ϕ10 to ϕ63>

Note 1: Brackets cannot be attached to cylinders that have ϕ6 and ϕ8 cylinder bores.
2: Reed type sensor switches cannot be attached to cylinders that have ϕ6, ϕ8, ϕ10, or ϕ12 cylinder bores.
3: When using reed switch type sensor switches, operates at cylinder speed of 30 mm/s or higher.

Mass

● Double acting type (clean room specification, without dust collection port)

g

Model	Stroke																
	5	10	15	20	25	30	35	40	45	50	55	60	70	75	80	90	100
CSL-BC6	13 (15)	16 (18)	20 (22)	23 (25)	27 (29)	30 (32)	–	–	–	–	–	–	–	–	–	–	–
CSL-BC8	19 (21)	21 (23)	24 (26)	27 (29)	31 (32)	32 (34)	–	–	–	–	–	–	–	–	–	–	–
CSL-BC10	21 (23)	23 (25)	26 (28)	29 (31)	32 (34)	34 (36)	–	–	–	–	–	–	–	–	–	–	–
CSL-BC12	29 (32)	33 (36)	38 (41)	42 (45)	46 (49)	50 (53)	55 (58)	59 (62)	63 (66)	67 (70)	–	–	–	–	–	–	–
CSL-BC16	44 (49)	49 (54)	55 (60)	61 (66)	67 (72)	72 (77)	78 (83)	84 (89)	90 (95)	95 (100)	–	–	–	–	–	–	–
CSL-BC20	86 (96)	84 (94)	93 (103)	102 (112)	111 (121)	120 (130)	129 (139)	137 (147)	146 (156)	155 (165)	164 (174)	173 (183)	190 (200)	199 (209)	208 (218)	226 (236)	243 (253)
CSL-BC25	126 (142)	122 (138)	134 (150)	146 (162)	159 (175)	171 (187)	183 (199)	195 (211)	207 (223)	219 (235)	231 (247)	243 (259)	267 (283)	280 (296)	292 (308)	316 (332)	340 (356)
CSL-BC32	–	222 (262)	242 (282)	262 (302)	283 (323)	303 (343)	323 (363)	343 (383)	363 (403)	383 (423)	403 (443)	423 (463)	464 (504)	484 (524)	504 (544)	544 (584)	584 (624)
CSL-BC40	–	316 (356)	339 (379)	362 (402)	386 (426)	409 (449)	433 (473)	456 (496)	479 (519)	502 (542)	526 (566)	549 (589)	596 (636)	619 (659)	642 (682)	689 (729)	735 (775)
CSL-BC50	–	545 (640)	580 (675)	614 (709)	649 (744)	683 (778)	718 (813)	752 (847)	786 (881)	820 (915)	855 (950)	889 (984)	958 (1053)	993 (1088)	1027 (1122)	1096 (1191)	1164 (1259)
CSL-BC63	–	832 (927)	872 (967)	912 (1007)	952 (1047)	991 (1086)	1031 (1126)	1071 (1166)	1111 (1206)	1150 (1245)	1190 (1285)	1230 (1325)	1310 (1405)	1350 (1445)	1389 (1484)	1469 (1564)	1548 (1643)

Values in ( ) parentheses are masses for male thread specifications

● Double acting type (clean room specification, with dust collection port)

g

Model	Stroke																
	5	10	15	20	25	30	35	40	45	50	55	60	70	75	80	90	100
CS-BC10	29 (31)	31 (33)	34 (36)	37 (39)	40 (42)	42 (44)	–	–	–	–	–	–	–	–	–	–	–
CS-BC12	43 (46)	47 (50)	52 (55)	56 (59)	60 (63)	64 (67)	69 (72)	73 (76)	77 (80)	81 (84)	–	–	–	–	–	–	–
CS-BC16	61 (66)	66 (71)	72 (77)	78 (83)	84 (89)	89 (94)	95 (100)	101 (106)	107 (112)	112 (117)	–	–	–	–	–	–	–
CS-BC20	111 (121)	109 (119)	118 (128)	127 (137)	136 (146)	145 (155)	154 (164)	162 (172)	171 (181)	180 (190)	189 (199)	198 (208)	215 (225)	224 (234)	233 (243)	251 (261)	268 (278)
CS-BC25	162 (178)	158 (174)	170 (186)	182 (198)	195 (211)	207 (223)	219 (235)	231 (247)	243 (259)	255 (271)	267 (283)	279 (295)	303 (319)	316 (332)	328 (344)	352 (368)	376 (392)
CS-BC32	–	306 (346)	326 (366)	346 (386)	367 (407)	387 (427)	407 (447)	427 (467)	447 (487)	467 (507)	487 (527)	507 (547)	548 (588)	568 (608)	588 (628)	628 (668)	668 (708)
CS-BC40	–	437 (477)	460 (500)	483 (523)	507 (547)	530 (570)	554 (594)	577 (617)	600 (640)	623 (663)	647 (687)	670 (710)	717 (757)	740 (780)	763 (803)	810 (850)	856 (896)
CS-BC50	–	740 (835)	775 (870)	809 (904)	844 (939)	878 (973)	913 (1008)	947 (1042)	981 (1076)	1015 (1110)	1050 (1145)	1084 (1179)	1153 (1248)	1188 (1283)	1222 (1317)	1291 (1386)	1359 (1454)
CS-BC63	–	1174 (1269)	1214 (1309)	1254 (1349)	1294 (1389)	1333 (1428)	1373 (1468)	1413 (1508)	1453 (1548)	1492 (1587)	1532 (1627)	1572 (1667)	1652 (1747)	1692 (1787)	1731 (1826)	1811 (1906)	1890 (1985)

Values in ( ) parentheses are masses for male thread specifications

● Additional mass of sensor switches

ZE□□□A, **ZE□□□G**: 15g **ZE□□□B**: 35g

Order Codes (Clean system compatible cylinders)

■ Double acting type (single rod)

□ - BC □ × □ - □ - □ - □ □ □

Number of sensor switches
1: 1 sensor switch
2: 2 sensor switches
3: 3 sensor switches
⋮

Piston rod end shape
Blank: Female thread
B : Male thread

Bracket
Blank: No bracket
BK : With bracket Note 1

Lead wire length
A: 39.370 in.
B: 118.1 in.
G: 300 mm [11.811 in.] with M8 connector, only on the **ZE175**, **ZE177**, **ZE275**, **ZE277**

Cylinder bore
×
Stroke

● See page 73 for cylinder bores and strokes.

Note: Cylinder bores ϕ0.236 and ϕ0.315 not available for types with dust collection port.

Sensor switch model
Blank : No sensor switch
ZE135 : 2-lead wires, solid state type, horizontal lead wires
ZE155 : 3-lead wires, solid state NPN output type, horizontal lead wires
ZE175 : 3-lead wires, solid state PNP output type, horizontal lead wires
ZE235 : 2-lead wires, solid state type, vertical lead wires
ZE255 : 3-lead wires, solid state NPN output type, vertical lead wires
ZE275 : 3-lead wires, solid state PNP output type, vertical lead wires
ZE137 : 2-lead wires, 2-color LED solid state type, horizontal lead wires
ZE157 : 3-lead wires, 2-color LED solid state NPN output type, horizontal lead wires
ZE177 : 3-lead wires, 2-color LED solid state PNP output type, horizontal lead wires
ZE237 : 2-lead wires, 2-color LED solid state type, vertical lead wires
ZE257 : 3-lead wires, 2-color LED solid state NPN output type, vertical lead wires
ZE277 : 3-lead wires, 2-color LED solid state PNP output type, vertical lead wires
ZE101 : 2-lead wires, reed switch type without indicator, horizontal lead wires Note 2
ZE102 : 2-lead wires, reed switch type, horizontal lead wires Note 2
ZE201 : 2-lead wires, reed switch type without indicator, vertical lead wires Note 2
ZE202 : 2-lead wires, reed switch type, vertical lead wires Note 2

● For details on sensor switches, see page 94.

Basic Cylinders

Clean system compatible cylinders
CSL: Without dust collection port <Cylinder bore: ϕ0.236 to ϕ2.480>
CS : With dust collection port <Cylinder bore: ϕ0.394 to ϕ2.480>

Note 1: Brackets cannot be attached to cylinders that have ϕ0.236 and ϕ0.315 cylinder bores.
2: Reed type sensor switches cannot be attached to cylinders that have ϕ0.236, ϕ0.315, ϕ0.394, or ϕ0.472 cylinder bores.
3: When using reed switch type sensor switches, operates at cylinder speed of 1.181 in/sec or higher.

Mass

● Double acting type (clean room specification, without dust collection port)

oz

Model	Stroke																
	5	10	15	20	25	30	35	40	45	50	55	60	70	75	80	90	100
CSL-BC6	0.46 (0.53)	0.56 (0.63)	0.71 (0.78)	0.81 (0.88)	0.95 (1.02)	1.06 (1.13)	–	–	–	–	–	–	–	–	–	–	–
CSL-BC8	0.67 (0.74)	0.74 (0.81)	0.85 (0.92)	0.95 (1.02)	1.09 (1.13)	1.13 (1.20)	–	–	–	–	–	–	–	–	–	–	–
CSL-BC10	0.74 (0.81)	0.81 (0.88)	0.92 (0.99)	1.02 (1.09)	1.13 (1.20)	1.20 (1.27)	–	–	–	–	–	–	–	–	–	–	–
CSL-BC12	1.02 (1.13)	1.16 (1.27)	1.34 (1.45)	1.48 (1.59)	1.62 (1.73)	1.76 (1.87)	1.94 (2.05)	2.08 (2.19)	2.22 (2.33)	2.36 (2.47)	–	–	–	–	–	–	–
CSL-BC16	1.55 (1.73)	1.73 (1.90)	1.94 (2.12)	2.15 (2.33)	2.36 (2.54)	2.54 (2.72)	2.75 (2.93)	2.96 (3.14)	3.17 (3.35)	3.35 (3.53)	–	–	–	–	–	–	–
CSL-BC20	3.03 (3.39)	2.96 (3.32)	3.28 (3.63)	3.60 (3.95)	3.92 (4.27)	4.23 (4.59)	4.55 (4.90)	4.83 (5.19)	5.15 (5.50)	5.47 (5.82)	5.78 (6.14)	6.10 (6.46)	6.70 (7.05)	7.02 (7.37)	7.34 (7.69)	7.97 (8.32)	8.57 (8.92)
CSL-BC25	4.44 (5.01)	4.30 (4.87)	4.73 (5.29)	5.15 (5.71)	5.61 (6.17)	6.03 (6.60)	6.46 (7.02)	6.88 (7.44)	7.30 (7.87)	7.72 (8.29)	8.15 (8.71)	8.57 (9.14)	9.42 (9.98)	9.88 (10.44)	10.30 (10.86)	11.15 (11.71)	11.99 (12.56)
CSL-BC32	–	7.83 (9.24)	8.54 (9.95)	9.24 (10.65)	9.98 (11.39)	10.69 (12.10)	11.39 (12.80)	12.10 (13.51)	12.80 (14.22)	13.51 (14.92)	14.22 (15.63)	14.92 (16.33)	16.37 (17.78)	17.07 (18.48)	17.78 (19.19)	19.19 (20.60)	20.60 (22.01)
CSL-BC40	–	11.15 (12.56)	11.96 (13.37)	12.77 (14.18)	13.62 (15.03)	14.43 (15.84)	15.27 (16.68)	16.08 (17.50)	16.90 (18.31)	17.71 (19.12)	18.55 (19.96)	19.37 (20.78)	21.02 (22.43)	21.83 (23.25)	22.65 (24.06)	24.30 (25.71)	25.93 (27.34)
CSL-BC50	–	19.22 (22.57)	20.46 (23.81)	21.66 (25.01)	22.89 (26.24)	24.09 (27.44)	25.33 (28.68)	26.53 (29.88)	27.72 (31.08)	28.92 (32.28)	30.16 (33.51)	31.36 (34.71)	33.79 (37.14)	35.03 (38.38)	36.23 (39.58)	38.66 (42.01)	41.06 (44.41)
CSL-BC63	–	29.35 (32.70)	30.76 (34.11)	32.17 (35.52)	33.58 (36.93)	34.96 (38.31)	36.37 (39.72)	37.78 (41.13)	39.19 (42.54)	40.56 (43.92)	41.98 (45.33)	43.39 (46.74)	46.21 (49.56)	47.62 (50.97)	48.99 (52.35)	51.82 (55.17)	54.60 (57.95)

Values in ( ) parentheses are masses for male thread specifications

● Double acting type (clean room specification, with dust collection port)

oz

Model	Stroke																
	5	10	15	20	25	30	35	40	45	50	55	60	70	75	80	90	100
CS-BC10	1.02 (1.09)	1.09 (1.16)	1.20 (1.27)	1.31 (1.38)	1.41 (1.48)	1.48 (1.55)	–	–	–	–	–	–	–	–	–	–	–
CS-BC12	1.52 (1.62)	1.66 (1.76)	1.83 (1.94)	1.98 (2.08)	2.12 (2.22)	2.26 (2.36)	2.43 (2.54)	2.57 (2.68)	2.72 (2.82)	2.86 (2.96)	–	–	–	–	–	–	–
CS-BC16	2.15 (2.33)	2.33 (2.50)	2.54 (2.72)	2.75 (2.93)	2.96 (3.14)	3.14 (3.32)	3.35 (3.53)	3.56 (3.74)	3.77 (3.95)	3.95 (4.13)	–	–	–	–	–	–	–
CS-BC20	3.92 (4.27)	3.84 (4.20)	4.16 (4.51)	4.48 (4.83)	4.80 (5.15)	5.11 (5.47)	5.43 (5.78)	5.71 (6.07)	6.03 (6.38)	6.35 (6.70)	6.67 (7.02)	6.98 (7.34)	7.58 (7.94)	7.90 (8.25)	8.22 (8.57)	8.85 (9.21)	9.45 (9.81)
CS-BC25	5.71 (6.28)	5.57 (6.14)	6.00 (6.56)	6.42 (6.98)	6.88 (7.44)	7.30 (7.87)	7.72 (8.29)	8.15 (8.71)	8.57 (9.14)	8.99 (9.56)	9.42 (9.98)	9.84 (10.41)	10.69 (11.25)	11.15 (11.71)	11.57 (12.13)	12.42 (12.98)	13.26 (13.83)
CS-BC32	–	10.79 (12.20)	11.50 (12.91)	12.20 (13.62)	12.95 (14.36)	13.65 (15.06)	14.36 (15.77)	15.06 (16.47)	15.77 (17.18)	16.47 (17.88)	17.18 (18.59)	17.88 (19.29)	19.33 (20.74)	20.04 (21.45)	20.74 (22.15)	22.15 (23.56)	23.56 (24.97)
CS-BC40	–	15.41 (16.83)	16.23 (17.64)	17.04 (18.45)	17.88 (19.29)	18.69 (20.11)	19.54 (20.95)	20.35 (21.76)	21.16 (22.57)	21.98 (23.39)	22.82 (24.23)	23.63 (25.04)	25.29 (26.70)	26.10 (27.51)	26.91 (28.32)	28.57 (29.98)	30.19 (31.60)
CS-BC50	–	26.10 (29.45)	27.34 (30.69)	28.54 (31.89)	29.77 (33.12)	30.97 (34.32)	32.20 (35.56)	33.40 (36.75)	34.60 (37.95)	35.80 (30.32)	37.04 (40.39)	38.24 (41.59)	40.67 (44.02)	41.90 (45.26)	43.10 (46.46)	45.54 (48.89)	47.94 (51.29)
CS-BC63	–	41.41(44.76)	42.82 (46.17)	44.23 (47.58)	45.64 (48.99)	47.02 (50.37)	48.43 (51.78)	49.84 (53.19)	51.25 (54.60)	52.63(55.98)	54.04 (57.39)	55.45 (58.80)	58.27 (61.62)	59.68 (63.03)	61.06 (64.41)	63.88 (67.23)	66.67 (70.02)

Values in ( ) parentheses are masses for male thread specifications

● Additional mass of sensor switches

ZE□□□A, **ZE□□□G**: 0.53 oz **ZE□□□B**: 1.23 oz

Inner construction

■ Double acting type (clean room specification)

● ϕ10 [0.394]

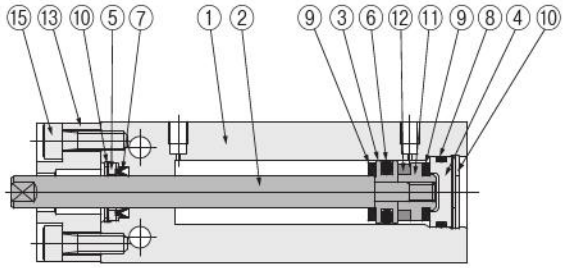

● ϕ12 to ϕ63 [0.472 to 2.480]

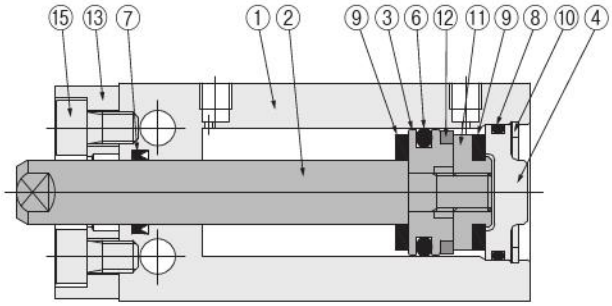

● Male thread specifications

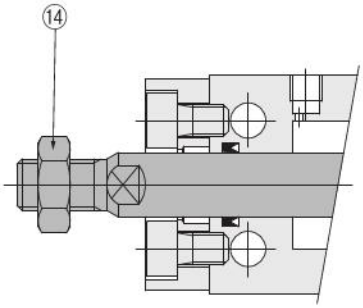

● 5 stroke for CS (L)-BC20 and CS (L)-BC25

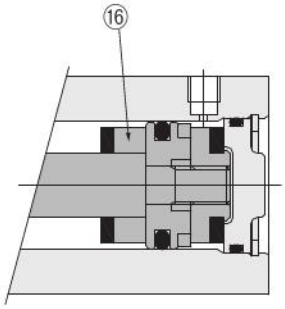

Major parts and materials (clean room specification)

No	Name	ϕ6 [0.236] Note 1	ϕ8 [0.315] Note 1	ϕ10 [0.394]	ϕ12 [0.472]	ϕ16 [0.630]	ϕ20 [0.787]	ϕ25 [0.984]	ϕ32 [1.260]	ϕ40 [1.575]	ϕ50 [1.969]	ϕ63 [2.480]
①	Cylinder body	Aluminum alloy (special anti-abrasion treated)										
②	Piston rod	Stainless steel										
③	Piston	Stainless steel				Aluminum alloy (anodized)						
④	Head cover	Aluminum alloy (anodized)										
⑤	Packing holder	Aluminum alloy (anodized)			–	–	–	–	–	–	–	–
⑥	★Piston packing	Synthetic rubber (NBR)										
⑦	★Rod packing	Synthetic rubber (NBR)										
⑧	★O-ring	Synthetic rubber (NBR)										
⑨	Bumper	Synthetic rubber (NBR)										
⑩	★Retaining ring	Stainless steel Note 2			Steel (electroless nickel plated)							
⑪	Support	Stainless steel	Aluminum alloy (anodized)									
⑫	Magnet	Neodymium magnet							Plastic magnet			
⑬	Rod cover (with dust collection port) Note 4	–	–	Aluminum alloy (anodized)								
⑭	Rod end nut	Stainless steel										
⑮	Bolt	–	–	Stainless steel								
⑯	Collar Note 3	–	–	–	–	–	Aluminum alloy (anodized)		–	–	–	–

Items indicated by a ★ are available as additional parts or in packing sets. For order codes, see page ㉜.

Note 1: Cylinders with dust collection ports not available for cylinder bores ϕ6 [0.236] and ϕ8 [0.315].
2: ϕ6 [0.236], ϕ8 [0.315], and ϕ10 [0.394] head cover side is steel. (electroless nickel plated).
3: Only 5-stroke models are attached with a collar.
4: Models without dust collection ports and models with dust collection ports are available for ϕ10 to ϕ63 [0.394 to 2.480]. For information about the internal structure (shape) of without dust collection port, see the double acting type diagrams on page ㉘.

Dimensions of without dust collection port types are the same as those for the standard specification. Refer to pages ㉛ and ㉜.

● CS-BC10 (clean room specification, with dust collection port)

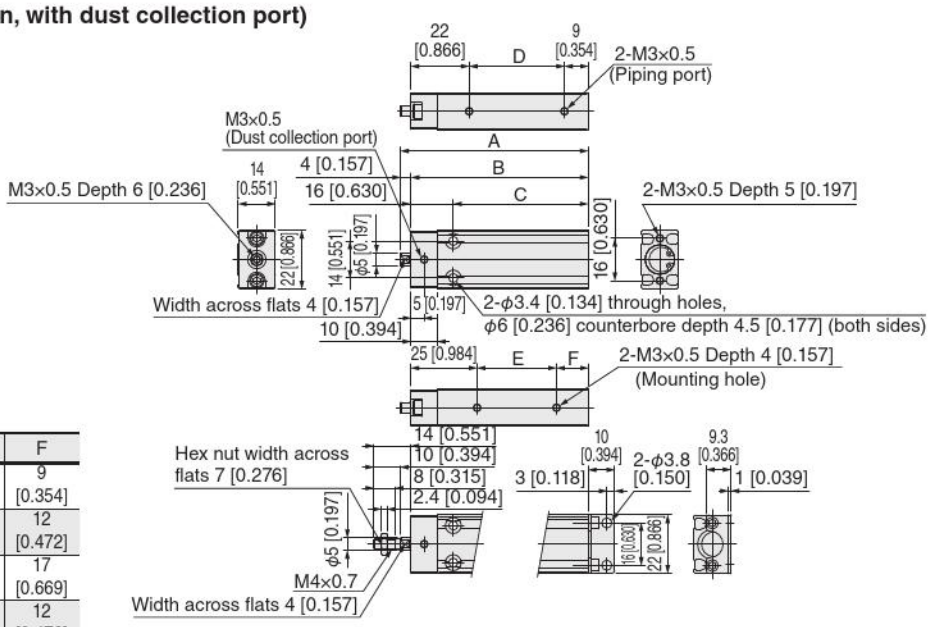

-B: Male thread specifications -BK: With bracket (shipped attached)

Note: This product cannot use reed switch type sensor switches.

Stroke	A	B	C	D	E	F
5	46 [1.811]	42 [1.654]	26 [1.024]	11 [0.433]	8 [0.315]	9 [0.354]
10	51 [2.008]	47 [1.850]	31 [1.220]	16 [0.630]	10 [0.394]	12 [0.472]
15	56 [2.205]	52 [2.047]	36 [1.417]	21 [0.827]	10 [0.394]	17 [0.669]
20	61 [2.402]	57 [2.244]	41 [1.614]	26 [1.024]	20 [0.787]	12 [0.472]
25	66 [2.598]	62 [2.441]	46 [1.811]	31 [1.220]	20 [0.787]	17 [0.669]
30	71 [2.795]	67 [2.638]	51 [2.008]	36 [1.417]	30 [1.181]	12 [0.472]

● CS-BC12 (clean room specification, with dust collection port)

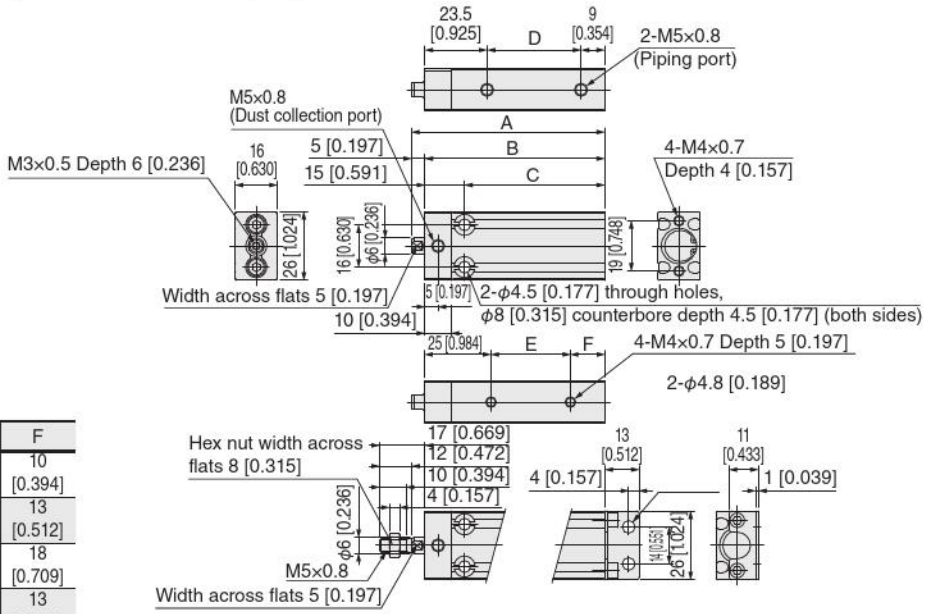

-B: Male thread specifications -BK: With bracket (shipped attached)

Note: This product cannot use reed switch type sensor switches.

Stroke	A	B	C	D	E	F
5	48 [1.890]	43 [1.693]	28 [1.102]	10.5 [0.413]	8 [0.315]	10 [0.394]
10	53 [2.087]	48 [1.890]	33 [1.299]	15.5 [0.610]	10 [0.394]	13 [0.512]
15	58 [2.283]	53 [2.087]	38 [1.496]	20.5 [0.807]	10 [0.394]	18 [0.709]
20	63 [2.480]	58 [2.283]	43 [1.693]	25.5 [1.004]	20 [0.787]	13 [0.512]
25	68 [2.677]	63 [2.480]	48 [1.890]	30.5 [1.201]	20 [0.787]	18 [0.709]
30	73 [2.874]	68 [2.677]	53 [2.087]	35.5 [1.398]	30 [1.181]	13 [0.512]
35	78 [3.071]	73 [2.874]	58 [2.283]	40.5 [1.594]	30 [1.181]	18 [0.709]
40	83 [3.268]	78 [3.071]	63 [2.480]	45.5 [1.791]	40 [1.575]	13 [0.512]
45	88 [3.465]	83 [3.268]	68 [2.677]	50.5 [1.988]	40 [1.575]	18 [0.709]
50	93 [3.661]	88 [3.465]	73 [2.874]	55.5 [2.185]	50 [1.969]	13 [0.512]

Dimensions of without dust collection port types are the same as those for the standard specification. Refer to page 33.

● CS-BC16 (clean room specification, with dust collection port)

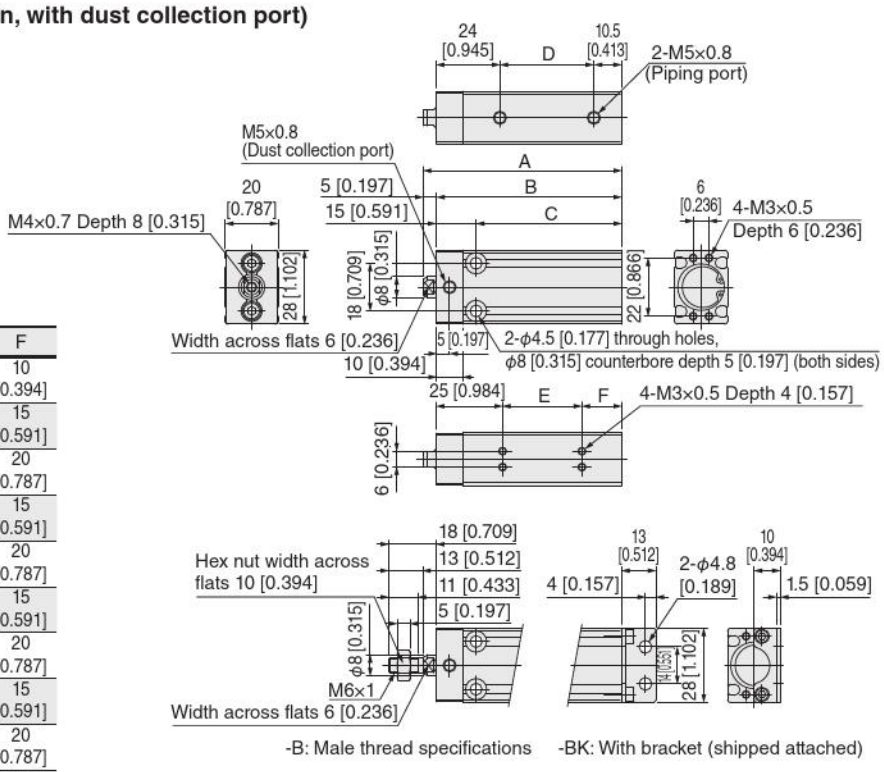

Stroke	A	B	C	D	E	F
5	50 [1.969]	45 [1.772]	30 [1.181]	10.5 [0.413]	10 [0.394]	10 [0.394]
10	55 [2.165]	50 [1.969]	35 [1.378]	15.5 [0.610]	10 [0.394]	15 [0.591]
15	60 [2.362]	55 [2.165]	40 [1.575]	20.5 [0.807]	10 [0.394]	20 [0.787]
20	65 [2.559]	60 [2.362]	45 [1.772]	25.5 [1.004]	20 [0.787]	15 [0.591]
25	70 [2.756]	65 [2.559]	50 [1.969]	30.5 [1.201]	20 [0.787]	20 [0.787]
30	75 [2.953]	70 [2.756]	55 [2.165]	35.5 [1.398]	30 [1.181]	15 [0.591]
35	80 [3.150]	75 [2.953]	60 [2.362]	40.5 [1.594]	30 [1.181]	20 [0.787]
40	85 [3.346]	80 [3.150]	65 [2.559]	45.5 [1.791]	40 [1.575]	15 [0.591]
45	90 [3.543]	85 [3.346]	70 [2.756]	50.5 [1.988]	40 [1.575]	20 [0.787]
50	95 [3.740]	90 [3.543]	75 [2.953]	55.5 [2.185]	50 [1.969]	15 [0.591]

● CS-BC20 (clean room specification, with dust collection port)

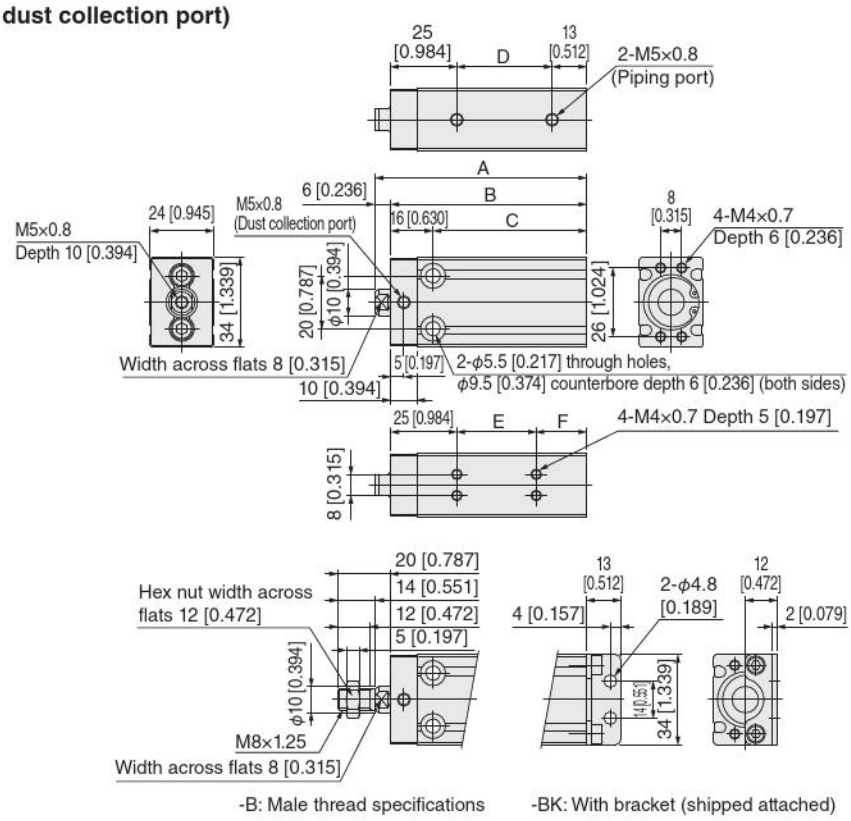

Stroke	A	B	C	D	E	F
5	60 [2.362]	54 [2.126]	38 [1.496]	16 [0.630]	10 [0.394]	19 [0.748]
10						
15	65 [2.559]	59 [2.323]	43 [1.693]	21 [0.827]	10 [0.394]	24 [0.945]
20	70 [2.756]	64 [2.520]	48 [1.890]	26 [1.024]	20 [0.787]	19 [0.748]
25	75 [2.953]	69 [2.717]	53 [2.087]	31 [1.220]	20 [0.787]	24 [0.945]
30	80 [3.150]	74 [2.913]	58 [2.283]	36 [1.417]	30 [1.181]	19 [0.748]
35	85 [3.346]	79 [3.110]	63 [2.480]	41 [1.614]	30 [1.181]	24 [0.945]
40	90 [3.543]	84 [3.307]	68 [2.677]	46 [1.811]	40 [1.575]	19 [0.748]
45	95 [3.740]	89 [3.504]	73 [2.874]	51 [2.008]	40 [1.575]	24 [0.945]
50	100 [3.937]	94 [3.701]	78 [3.071]	56 [2.205]	50 [1.969]	19 [0.748]
55	105 [4.134]	99 [3.898]	83 [3.268]	61 [2.402]	50 [1.969]	24 [0.945]
60	110 [4.331]	104 [4.094]	88 [3.465]	66 [2.598]	50 [1.969]	29 [1.142]
70	120 [4.724]	114 [4.488]	98 [3.858]	76 [2.992]	70 [2.756]	19 [0.748]
75	125 [4.921]	119 [4.685]	103 [4.055]	81 [3.189]	70 [2.756]	24 [0.945]
80	130 [5.118]	124 [4.882]	108 [4.252]	86 [3.386]	70 [2.756]	29 [1.142]
90	140 [5.512]	134 [5.276]	118 [4.646]	96 [3.780]	90 [3.543]	19 [0.748]
100	150 [5.906]	144 [5.669]	128 [5.039]	106 [4.173]	90 [3.543]	29 [1.142]

Note: 5-stroke models are available with collar insertion.

Dimensions of without dust collection port types are the same as those for the standard specification. Refer to page 34.

● CS-BC25 (clean room specification, with dust collection port)

Stroke	A	B	C	D	E	F
5 10	62 [2.441]	56 [2.205]	40 [1.575]	17 [0.669]	10 [0.394]	21 [0.827]
15	67 [2.638]	61 [2.402]	45 [1.772]	22 [0.866]	10 [0.394]	26 [1.024]
20	72 [2.835]	66 [2.598]	50 [1.969]	27 [1.063]	20 [0.787]	21 [0.827]
25	77 [3.031]	71 [2.795]	55 [2.165]	32 [1.260]	20 [0.787]	26 [1.024]
30	82 [3.228]	76 [2.992]	60 [2.362]	37 [1.457]	30 [1.181]	21 [0.827]
35	87 [3.425]	81 [3.189]	65 [2.559]	42 [1.654]	30 [1.181]	26 [1.024]
40	92 [3.622]	86 [3.386]	70 [2.756]	47 [1.850]	40 [1.575]	21 [0.827]
45	97 [3.819]	91 [3.583]	75 [2.953]	52 [2.047]	40 [1.575]	26 [1.024]
50	102 [4.016]	96 [3.780]	80 [3.150]	57 [2.244]	50 [1.969]	21 [0.827]
55	107 [4.213]	101 [3.976]	85 [3.346]	62 [2.441]	50 [1.969]	26 [1.024]
60	112 [4.409]	106 [4.173]	90 [3.543]	67 [2.638]	50 [1.969]	31 [1.220]
70	122 [4.803]	116 [4.567]	100 [3.937]	77 [3.031]	70 [2.756]	21 [0.827]
75	127 [5.000]	121 [4.764]	105 [4.134]	82 [3.228]	70 [2.756]	26 [1.024]
80	132 [5.197]	126 [4.961]	110 [4.331]	87 [3.425]	70 [2.756]	31 [1.220]
90	142 [5.591]	136 [5.354]	120 [4.724]	97 [3.819]	90 [3.543]	21 [0.827]
100	152 [5.984]	146 [5.748]	130 [5.118]	107 [4.213]	90 [3.543]	31 [1.220]

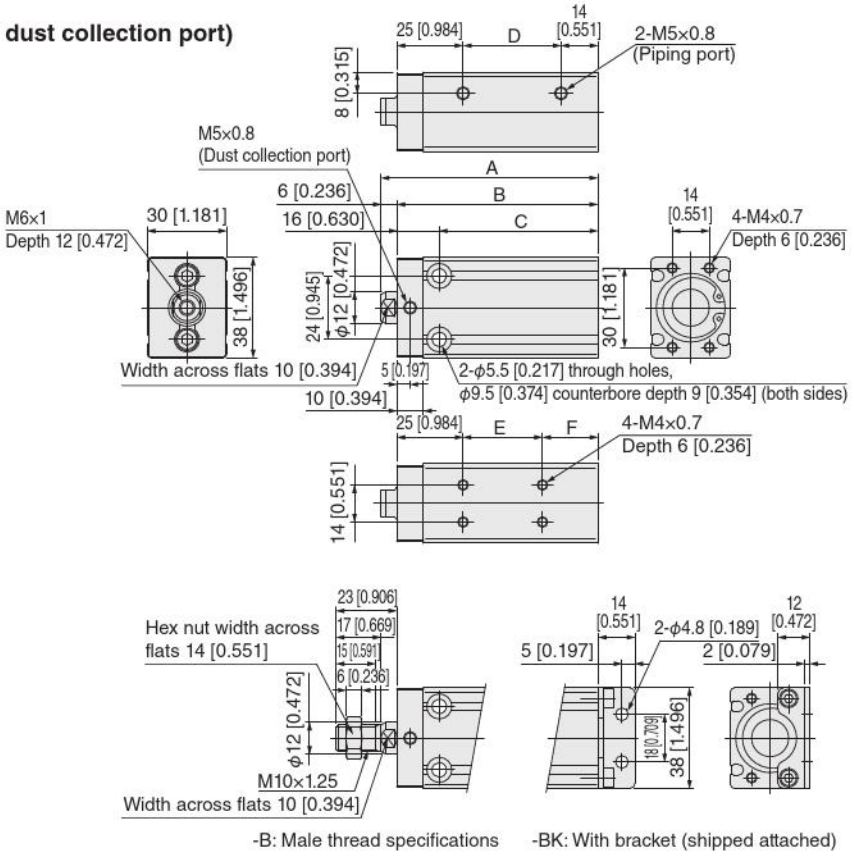

Note: 5-stroke models are available with collar insertion.

● CS-BC32 (clean room specification, with dust collection port)

Stroke	A	B	C	D	E	F
10	72 [2.835]	65 [2.559]	43 [1.693]	16 [0.630]	10 [0.394]	20 [0.787]
15	77 [3.031]	70 [2.756]	48 [1.890]	21 [0.827]	10 [0.394]	25 [0.984]
20	82 [3.228]	75 [2.953]	53 [2.087]	26 [1.024]	20 [0.787]	20 [0.787]
25	87 [3.425]	80 [3.150]	58 [2.283]	31 [1.220]	20 [0.787]	25 [0.984]
30	92 [3.622]	85 [3.346]	63 [2.480]	36 [1.417]	30 [1.181]	20 [0.787]
35	97 [3.819]	90 [3.543]	68 [2.677]	41 [1.614]	30 [1.181]	25 [0.984]
40	102 [4.016]	95 [3.740]	73 [2.874]	46 [1.811]	40 [1.575]	20 [0.787]
45	107 [4.213]	100 [3.937]	78 [3.071]	51 [2.008]	40 [1.575]	25 [0.984]
50	112 [4.409]	105 [4.134]	83 [3.268]	56 [2.205]	50 [1.969]	20 [0.787]
55	117 [4.606]	110 [4.331]	88 [3.465]	61 [2.402]	50 [1.969]	25 [0.984]
60	122 [4.803]	115 [4.528]	93 [3.661]	66 [2.598]	50 [1.969]	30 [1.181]
70	132 [5.197]	125 [4.921]	103 [4.055]	76 [2.992]	70 [2.756]	20 [0.787]
75	137 [5.394]	130 [5.118]	108 [4.252]	81 [3.189]	70 [2.756]	25 [0.984]
80	142 [5.591]	135 [5.315]	113 [4.449]	86 [3.386]	80 [3.150]	20 [0.787]
90	152 [5.984]	145 [5.709]	123 [4.843]	96 [3.780]	80 [3.150]	30 [1.181]
100	162 [6.378]	155 [6.102]	133 [5.236]	106 [4.173]	100 [3.937]	20 [0.787]

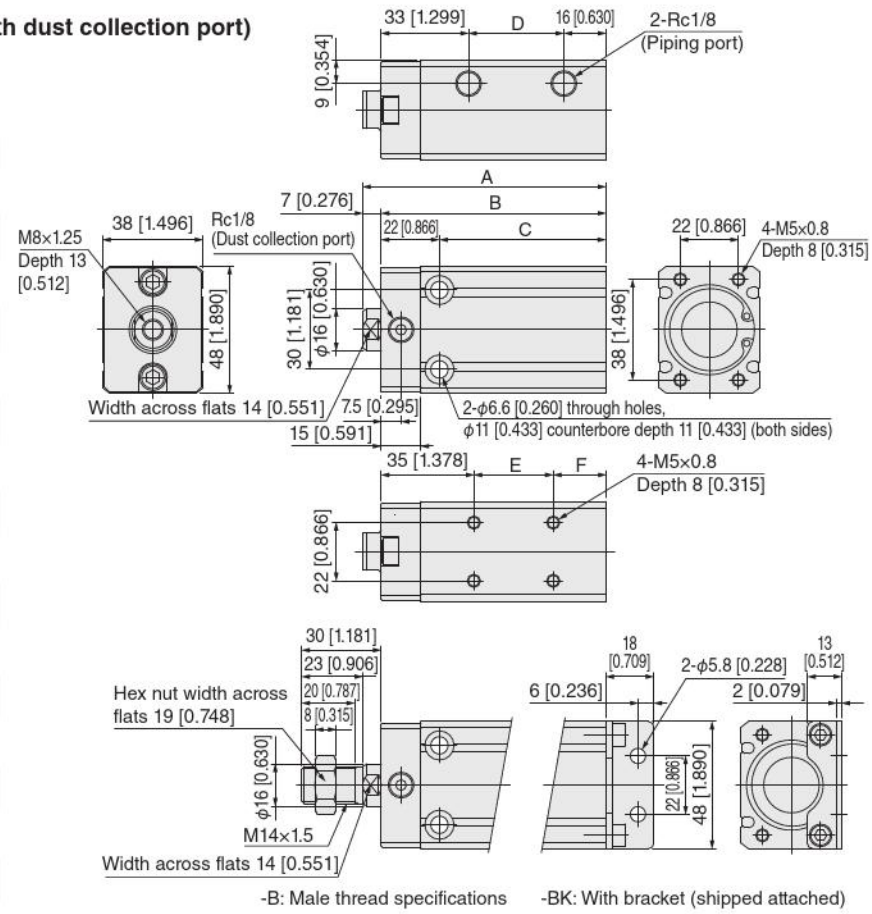

Dimensions of without dust collection port types are the same as those for the standard specification. Refer to page 35.

● CS-BC40 (clean room specification, with dust collection port)

Stroke	A	B	C	D	E	F
10	79 [3.110]	72 [2.835]	48 [1.890]	17 [0.669]	15 [0.591]	27 [1.063]
15	84 [3.307]	77 [3.031]	53 [2.087]	22 [0.866]	15 [0.591]	32 [1.260]
20	89 [3.504]	82 [3.228]	58 [2.283]	27 [1.063]	20 [0.787]	27 [1.063]
25	94 [3.701]	87 [3.425]	63 [2.480]	32 [1.260]	20 [0.787]	32 [1.260]
30	99 [3.898]	92 [3.622]	68 [2.677]	37 [1.457]	30 [1.181]	27 [1.063]
35	104 [4.094]	97 [3.819]	73 [2.874]	42 [1.654]	30 [1.181]	32 [1.260]
40	109 [4.291]	102 [4.016]	78 [3.071]	47 [1.850]	40 [1.575]	27 [1.063]
45	114 [4.488]	107 [4.213]	83 [3.268]	52 [2.047]	40 [1.575]	32 [1.260]
50	119 [4.685]	112 [4.409]	88 [3.465]	57 [2.244]	50 [1.969]	27 [1.063]
55	124 [4.882]	117 [4.606]	93 [3.661]	62 [2.441]	50 [1.969]	32 [1.260]
60	129 [5.079]	122 [4.803]	98 [3.858]	67 [2.638]	60 [2.362]	27 [1.063]
70	139 [5.472]	132 [5.197]	108 [4.252]	77 [3.031]	70 [2.756]	27 [1.063]
75	144 [5.669]	137 [5.394]	113 [4.449]	82 [3.228]	70 [2.756]	32 [1.260]
80	149 [5.866]	142 [5.591]	118 [4.646]	87 [3.425]	80 [3.150]	27 [1.063]
90	159 [6.260]	152 [5.984]	128 [5.039]	97 [3.819]	80 [3.150]	37 [1.457]
100	169 [6.654]	162 [6.378]	138 [5.433]	107 [4.213]	100 [3.937]	27 [1.063]

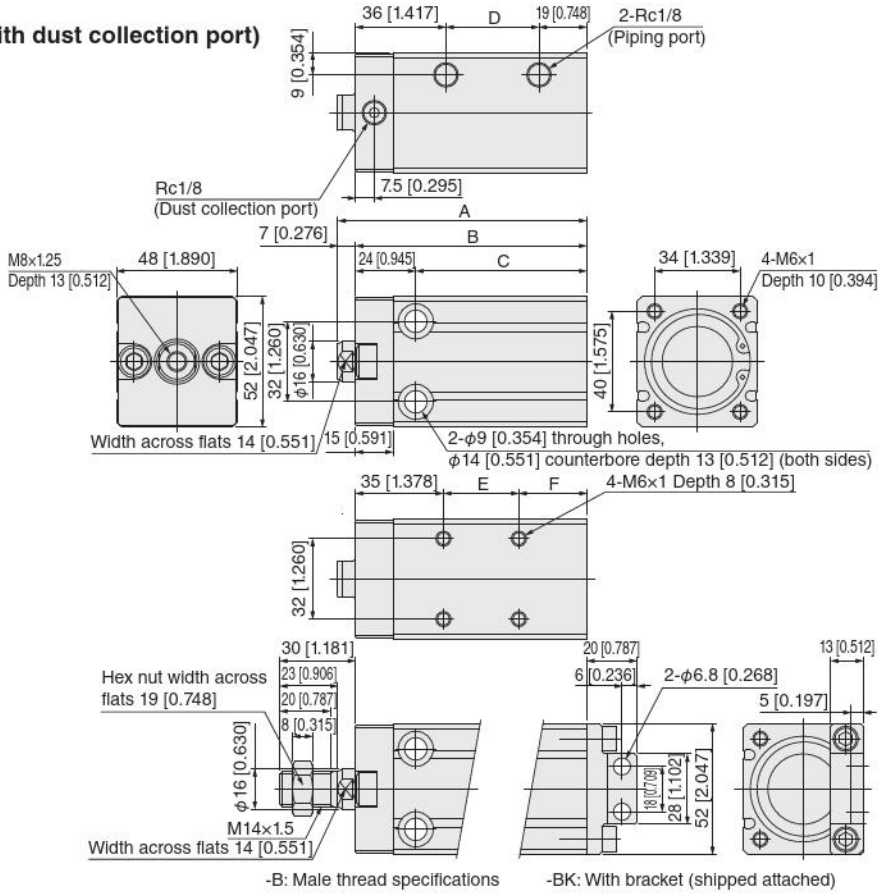

● CS-BC50 (clean room specification, with dust collection port)

Stroke	A	B	C	D
10	86 [3.386]	78 [3.071]	52 [2.047]	18 [0.709]
15	91 [3.583]	83 [3.268]	57 [2.244]	23 [0.906]
20	96 [3.780]	88 [3.465]	62 [2.441]	28 [1.102]
25	101 [3.976]	93 [3.661]	67 [2.638]	33 [1.299]
30	106 [4.173]	98 [3.858]	72 [2.835]	38 [1.496]
35	111 [4.370]	103 [4.055]	77 [3.031]	43 [1.693]
40	116 [4.567]	108 [4.252]	82 [3.228]	48 [1.890]
45	121 [4.764]	113 [4.449]	87 [3.425]	53 [2.087]
50	126 [4.961]	118 [4.646]	92 [3.622]	58 [2.283]
55	131 [5.157]	123 [4.843]	97 [3.819]	63 [2.480]
60	136 [5.354]	128 [5.039]	102 [4.016]	68 [2.677]
70	146 [5.748]	138 [5.433]	112 [4.409]	78 [3.071]
75	151 [5.945]	143 [5.630]	117 [4.606]	83 [3.268]
80	156 [6.142]	148 [5.827]	122 [4.803]	88 [3.465]
90	166 [6.535]	158 [6.220]	132 [5.197]	98 [3.858]
100	176 [6.929]	168 [6.614]	142 [5.591]	108 [4.252]

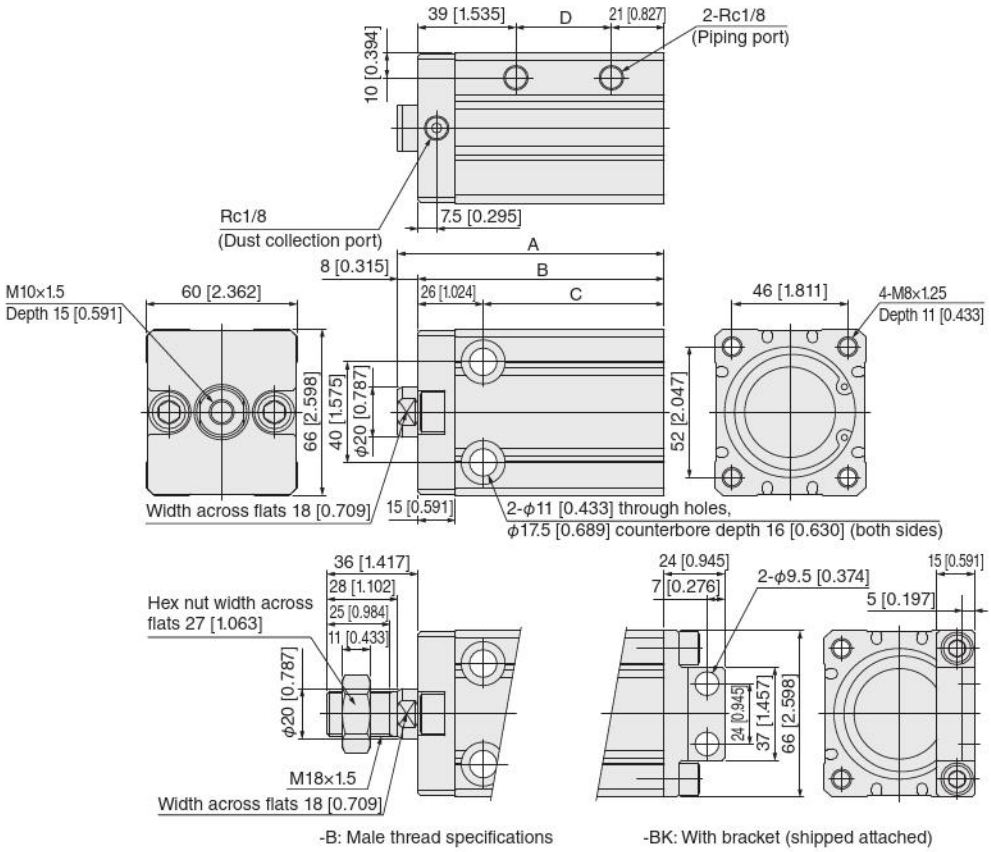

Dimensions of without dust collection port types are the same as those for the standard specification. Refer to page 36.

● CS-BC63 (clean room specification, with dust collection port)

Stroke	A	B	C	D
10	99 [3.898]	91 [3.583]	59 [2.323]	21 [0.827]
15	104 [4.094]	96 [3.780]	64 [2.520]	26 [1.024]
20	109 [4.291]	101 [3.976]	69 [2.717]	31 [1.220]
25	114 [4.488]	106 [4.173]	74 [2.913]	36 [1.417]
30	119 [4.685]	111 [4.370]	79 [3.110]	41 [1.614]
35	124 [4.882]	116 [4.567]	84 [3.307]	46 [1.811]
40	129 [5.079]	121 [4.764]	89 [3.504]	51 [2.008]
45	134 [5.276]	126 [4.961]	94 [3.701]	56 [2.205]
50	139 [5.472]	131 [5.157]	99 [3.898]	61 [2.402]
55	144 [5.669]	136 [5.354]	104 [4.094]	66 [2.598]
60	149 [5.866]	141 [5.551]	109 [4.291]	71 [2.795]
70	159 [6.260]	151 [5.945]	119 [4.685]	81 [3.189]
75	164 [6.457]	156 [6.142]	124 [4.882]	86 [3.386]
80	169 [6.654]	161 [6.339]	129 [5.079]	91 [3.583]
90	179 [7.047]	171 [6.732]	139 [5.472]	101 [3.976]
100	189 [7.441]	181 [7.126]	149 [5.866]	111 [4.370]

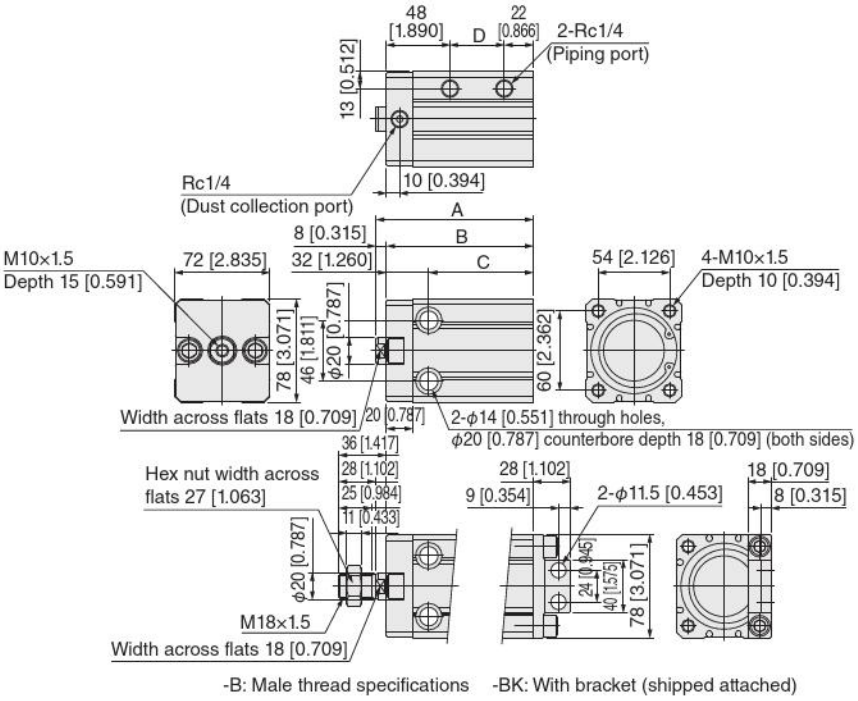

Basic Cylinders

Clean system compatible cylinders
Cylinder with guide

Symbol

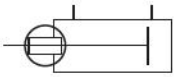

Specifications (clean room specification)

Item \ Cylinder bore		8 [0.315]	12 [0.472]	16 [0.630]	20 [0.787]	25 [0.984]	32 [1.260]	40 [1.575]
Operating type		Double acting type						
Medium		Air						
Operating pressure range MPa [psi]		0.2 to 0.7 [29 to 102]	0.1 to 0.7 [15 to 102]		0.08 to 0.7 [12 to 102]			
Proof pressure MPa [psi]		1.05 [152]						
Operating temperature range °C [°F]		0 to 60 [32 to 140]						
Operating speed range mm/s [in/sec]		50 to 300 [1.969 to 11.811]						
Cushion		Rubber bumper						
Lubrication		No						
Port size		M3×0.5	M5×0.8				Rc1/8	
Running parallelism mm [in.]		0.1 [0.004] or less						
Allowable moment N·m [in·lbf]	Pitching	0.12 [1.062]		0.40 [3.540]	1.50 [13.277]	2.18 [19.295]	4.46 [39.475]	6.70 [59.302]
	Rolling	0.12 [1.062]		0.40 [3.540]	1.80 [15.932]	2.18 [19.295]	4.46 [39.475]	8.00 [70.808]
	Yawing	0.21 [1.859]		0.68 [6.019]	2.20 [19.472]	4.18 [36.997]	7.31 [64.701]	13.70 [121.3]
Clean room rating Note 1		Class 6 equivalent (FED-STD Class 1000 equivalent) Note 2						

Note 1: Koganei standard. Cylinders with dust collection ports not available.
2: FED-STD was abolished as of November 2001, and it is designed here for reference purpose.

Linear guide being used

Cylinder bore	Rail width	Manufacturer
φ8 [0.315], φ12 [0.472]	5 [0.197]	THK
φ16 [0.630]	7 [0.276]	
φ20 [0.787]	9 [0.354]	
φ25 [0.984]	12 [0.472]	
φ32 [1.260]	15 [0.591]	
φ40 [1.575]	20 [0.787]	

Cylinder bore and stroke

Cylinder bore	Standard stroke
8 [0.315], 12 [0.472], 16 [0.630], 20 [0.787], 25 [0.984]	5 Note, 10, 15 Note, 20, 25 Note, 30, 35 Note, 40, 45 Note, 50, 55 Note, 60
32 [1.260]	10, 15 Note, 20, 25 Note, 30, 35 Note, 40, 45 Note, 50, 55 Note, 60
40 [1.575]	10 Note, 15 Note, 20, 25 Note, 30, 35 Note, 40, 45 Note, 50, 55 Note, 60

Note: This stroke is available with collar insertion.

Order Codes (Clean system compatible cylinders)

■ Cylinder with guide

CSL - BC G □ × - □ - □ □ □

Number of sensor switches
1: 1 sensor switch
2: 2 sensor switches
3: 3 sensor switches
⋮

Back side piping block Note 1
*** Available only in ϕ32 [1.260] and ϕ40 [1.575]**
Blank: Side piping
BP : Back side piping

Lead wire length
A: 1000 mm [39.370 in.]
B: 3000 mm [118.1 in.]
G: 300 mm [11.811 in.] with M8 connector, only on the **ZE175**, **ZE177**, **ZE275**, **ZE277**

Cylinder bore
×
Stroke
● See page 82 for cylinder bores and strokes.

Sensor switch model
Blank : No sensor switch
ZE135 : 2-lead wires, solid state type, horizontal lead wires
ZE155 : 3-lead wires, solid state NPN output type, horizontal lead wires
ZE175 : 3-lead wires, solid state PNP output type, horizontal lead wires
ZE235 : 2-lead wires, solid state type, vertical lead wires
ZE255 : 3-lead wires, solid state NPN output type, vertical lead wires
ZE275 : 3-lead wires, solid state PNP output type, vertical lead wires
ZE137 : 2-lead wires, 2-color LED solid state type, horizontal lead wires
ZE157 : 3-lead wires, 2-color LED solid state NPN output type, horizontal lead wires
ZE177 : 3-lead wires, 2-color LED solid state PNP output type, horizontal lead wires
ZE237 : 2-lead wires, 2-color LED solid state type, vertical lead wires
ZE257 : 3-lead wires, 2-color LED solid state NPN output type, vertical lead wires
ZE277 : 3-lead wires, 2-color LED solid state PNP output type, vertical lead wires
ZE101 : 2-lead wires, reed switch type without indicator, horizontal lead wires Note 2
ZE102 : 2-lead wires, reed switch type, horizontal lead wires Note 2
ZE201 : 2-lead wires, reed switch type without indicator, vertical lead wires Note 2
ZE202 : 2-lead wires, reed switch type, vertical lead wires Note 2
● For details on sensor switches, see page 94.

Locating pin hole
Blank: Without pin hole
N : With pin hole

G: Double acting type with guide

Basic Cylinders

Clean system compatible cylinders (Without dust collection port)

Note 1: Only ϕ32 [1.260] and ϕ40 [1.575] diameter bore cylinders can be mounted with back side piping blocks. Back side and side piping are possible as standard for ϕ8 to ϕ25 [0.315 to 0.984] models.
2: Reed type sensor switches cannot be attached to cylinders that have ϕ8 [0.315] and ϕ12 [0.472] cylinder bores.

Mass

● Cylinder with guide

g [oz]

Model	Stroke											
	5	10	15	20	25	30	35	40	45	50	55	60
CSL-BCG8	56 [1.98]	54 [1.90]	68 [2.40]	66 [2.33]	80 [2.82]	78 [2.75]	92 [3.25]	90 [3.17]	104 [3.67]	102 [3.60]	116 [4.09]	114 [4.02]
CSL-BCG12	82 [2.89]	81 [2.86]	96 [3.39]	95 [3.35]	110 [3.88]	109 [3.84]	124 [4.37]	123 [4.34]	138 [4.87]	137 [4.83]	152 [5.36]	151 [5.33]
CSL-BCG16	133 [4.69]	131 [4.62]	155 [5.47]	153 [5.40]	178 [6.28]	176 [6.21]	200 [7.05]	198 [6.98]	222 [7.83]	220 [7.76]	245 [8.64]	243 [8.57]
CSL-BCG20	207 [7.30]	205 [7.23]	236 [8.32]	234 [8.25]	265 [9.35]	263 [9.28]	294 [10.37]	292 [10.30]	323 [11.39]	321 [11.32]	352 [12.42]	350 [12.35]
CSL-BCG25	321 [11.32]	317 [11.18]	366 [12.91]	362 [12.77]	411 [14.50]	407 [14.36]	456 [16.08]	452 [15.94]	501 [17.67]	497 [17.53]	546 [19.26]	542 [19.12]
CSL-BCG32	–	597 [21.06]	675 [23.81]	669 [23.60]	746 [26.31]	740 [26.10]	818 [28.85]	812 [28.64]	889 [31.36]	883 [31.15]	961 [33.90]	955 [33.69]
CSL-BCG40	–	1031 [36.37]	1025 [36.16]	1019 [35.94]	1122 [39.58]	1116 [39.37]	1219 [43.00]	1213 [42.79]	1316 [46.42]	1310 [46.21]	1413 [49.84]	1407 [49.63]

In the case of back side piping specifications, add mass of 76 g [2.68 oz] for a ϕ32 [1.260] cylinder bore and 108 g [3.81 oz] for a ϕ40 [1.575] cylinder bore.

● Additional mass of sensor switches

ZE□□□A, **ZE□□□G**: 15 g [0.53 oz] **ZE□□□B**: 35 g [1.23 oz]

Inner construction

● ϕ8 [0.315]

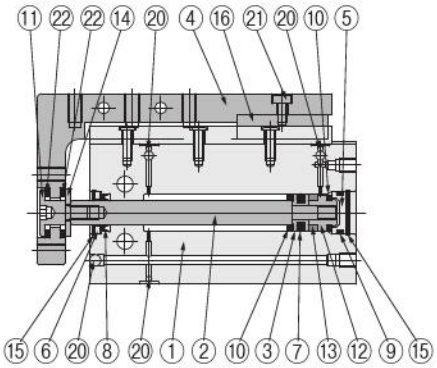

● ϕ12 to ϕ25 [0.472 to 0.984]

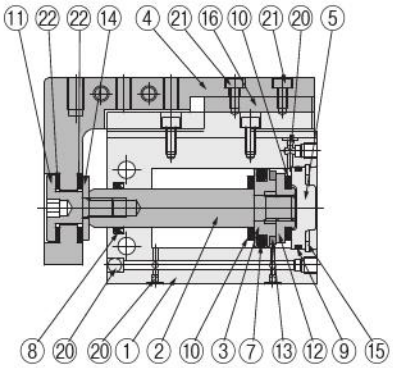

● ϕ32 [1.260], ϕ40 [1.575]

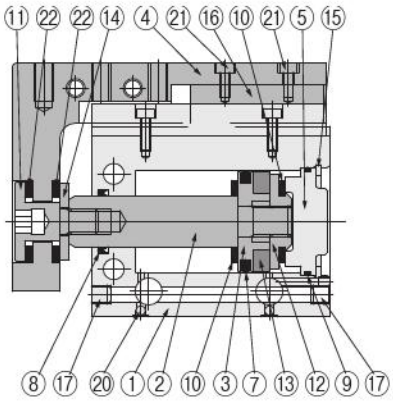

● **Mid-stroke models (Refer to double acting type with guide dimensions)**

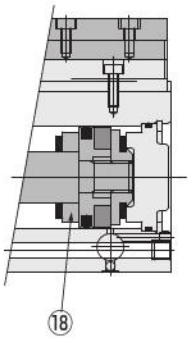

● **-BP: Back side piping specifications (ϕ32 [1.260], ϕ40 [1.575])**

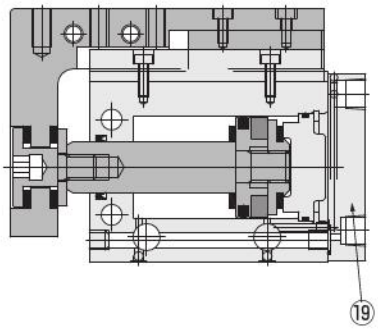

Major parts and materials (clean room specification)

No	Name	ϕ8 [0.315]	ϕ12 [0.472]	ϕ16 [0.630]	ϕ20 [0.787]	ϕ25 [0.984]	ϕ32 [1.260]	ϕ40 [1.575]
①	Cylinder body	Aluminum alloy (special anti-abrasion treated)						
②	Piston rod	Stainless steel						
③	Piston	Stainless steel		Aluminum alloy (anodized)				
④	Table	Aluminum alloy (anodized)						
⑤	Head cover	Aluminum alloy (anodized)						
⑥	Packing holder	Aluminum alloy (Anodized)	–	–	–	–	–	–
⑦	★Piston packing	Synthetic rubber (NBR)						
⑧	★Rod packing	Synthetic rubber (NBR)						
⑨	★O-ring	Synthetic rubber (NBR)						
⑩	Bumper	Synthetic rubber (NBR)						
⑪	End bolt	Stainless steel						
⑫	Support	Aluminum alloy (anodized)						
⑬	Magnet	Neodymium magnet					Plastic magnet	
⑭	Bolt retainer	Stainless steel						
⑮	★Retaining ring	Steel (electroless nickel plated)						
⑯	Linear guide	Stainless steel						
⑰	Plug	–	–	–	–	–	Stainless steel	
⑱	Collar	Aluminum alloy (anodized)						
⑲	★Back side piping block	–	–	–	–	–	Aluminum alloy (anodized)	
⑳	Steel ball	Stainless steel						
㉑	Bolt	Stainless steel						
㉒	Bumper	Urethane rubber						

Items indicated by a ★ are available as additional parts or in packing sets. For order codes, see pages 92 and 93.

● CSL-BCG□8 (clean room specification)

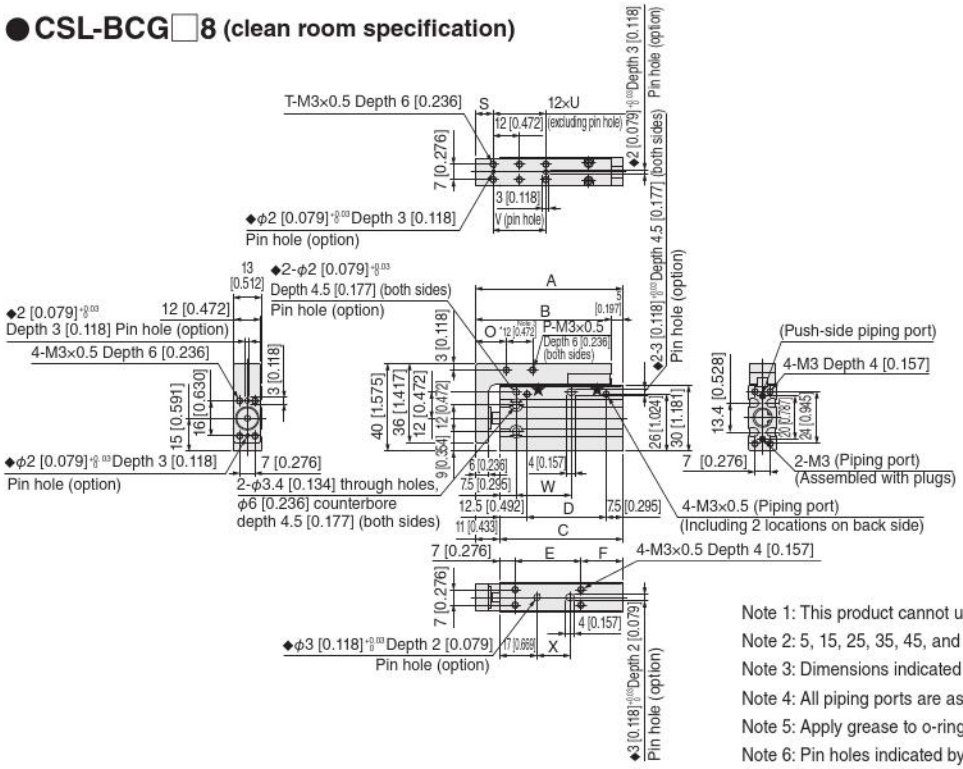

Note 1: This product cannot use reed switch type sensor switches.
Note 2: 5, 15, 25, 35, 45, and 55-stroke models are available with collar insertion.
Note 3: Dimensions indicated by * are for models with a stroke of 15 or more.
Note 4: All piping ports are assembled with plugs, except those indicated by ★.
Note 5: Apply grease to o-rings when changing plug assemblies.
Note 6: Pin holes indicated by ◆ are provided only when selected as an option (N).

Stroke	A	B	C	D	E	F	O	P	S	T	U	V	W	X
5, 10	47 [1.850]	42 [1.654]	36 [1.417]	16 [0.630]	15 [0.591]	14 [0.551]	10 [0.394]	2 [0.079]	5 [0.197]	4 [0.157]	–	12 [0.472]	15 [0.591]	10 [0.394]
15, 20	57 [2.244]	52 [2.047]	46 [1.811]	26 [1.024]	20 [0.787]	19 [0.748]	14 [0.551]	4 [0.157]	8 [0.315]	4 [0.157]	–	12 [0.472]	15 [0.591]	15 [0.591]
25, 30	67 [2.638]	62 [2.441]	56 [2.205]	36 [1.417]	30 [1.181]	19 [0.748]	14 [0.551]	4 [0.157]	8 [0.315]	6 [0.236]	2 [0.079]	24 [0.945]	25 [0.984]	15 [0.591]
35, 40	77 [3.031]	72 [2.835]	66 [2.598]	46 [1.811]	40 [1.575]	19 [0.748]	14 [0.551]	4 [0.157]	8 [0.315]	8 [0.315]	3 [0.118]	24 [0.945]	25 [0.984]	25 [0.984]
45, 50	87 [3.425]	82 [3.228]	76 [2.992]	56 [2.205]	50 [1.969]	19 [0.748]	14 [0.551]	4 [0.157]	8 [0.315]	10 [0.394]	4 [0.157]	36 [1.417]	35 [1.378]	35 [1.378]
55, 60	97 [3.819]	92 [3.622]	86 [3.386]	66 [2.598]	60 [2.362]	19 [0.748]	14 [0.551]	4 [0.157]	8 [0.315]	12 [0.472]	5 [0.197]	36 [1.417]	35 [1.378]	45 [1.772]

● CSL-BCG□12 (clean room specification)

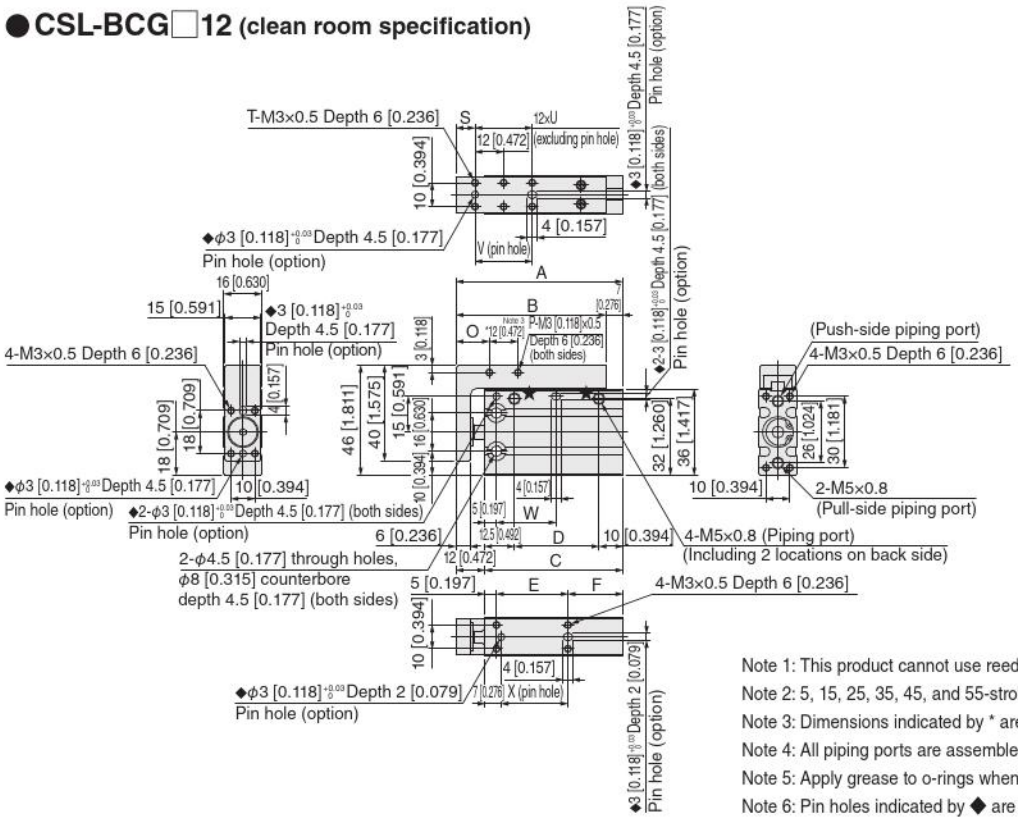

Note 1: This product cannot use reed switch type sensor switches.
Note 2: 5, 15, 25, 35, 45, and 55-stroke models are available with collar insertion.
Note 3: Dimensions indicated by * are for models with a stroke of 15 or more.
Note 4: All piping ports are assembled with plugs, except those indicated by ★.
Note 5: Apply grease to o-rings when changing plug assemblies.
Note 6: Pin holes indicated by ◆ are provided only when selected as an option (N).

Stroke	A	B	C	D	E	F	O	P	S	T	U	V	W	X
5, 10	50 [1.969]	43 [1.693]	38 [1.496]	15.5 [0.610]	15 [0.591]	18 [0.709]	10 [0.394]	2 [0.079]	5 [0.197]	4 [0.157]	–	12 [0.472]	15 [0.591]	13 [0.512]
15, 20	60 [2.362]	53 [2.087]	48 [1.890]	25.5 [1.004]	20 [0.787]	23 [0.906]	14 [0.551]	4 [0.157]	8 [0.315]	4 [0.157]	–	12 [0.472]	15 [0.591]	18 [0.709]
25, 30	70 [2.756]	63 [2.480]	58 [2.283]	35.5 [1.398]	30 [1.181]	23 [0.906]	14 [0.551]	4 [0.157]	8 [0.315]	6 [0.236]	2 [0.079]	24 [0.945]	25 [0.984]	28 [1.102]
35, 40	80 [3.150]	73 [2.874]	68 [2.677]	45.5 [1.791]	40 [1.575]	23 [0.906]	14 [0.551]	4 [0.157]	8 [0.315]	8 [0.315]	3 [0.118]	24 [0.945]	25 [0.984]	38 [1.496]
45, 50	90 [3.543]	83 [3.268]	78 [3.071]	55.5 [2.185]	50 [1.969]	23 [0.906]	14 [0.551]	4 [0.157]	8 [0.315]	10 [0.394]	4 [0.157]	36 [1.417]	35 [1.378]	48 [1.890]
55, 60	100 [3.937]	93 [3.661]	88 [3.465]	65.5 [2.579]	60 [2.362]	23 [0.906]	14 [0.551]	4 [0.157]	8 [0.315]	12 [0.472]	5 [0.197]	36 [1.417]	35 [1.378]	58 [2.283]

Double acting clean system compatible cylinder with guide dimensions (mm [in.])

● CSL-BCG□16 (clean room specification)

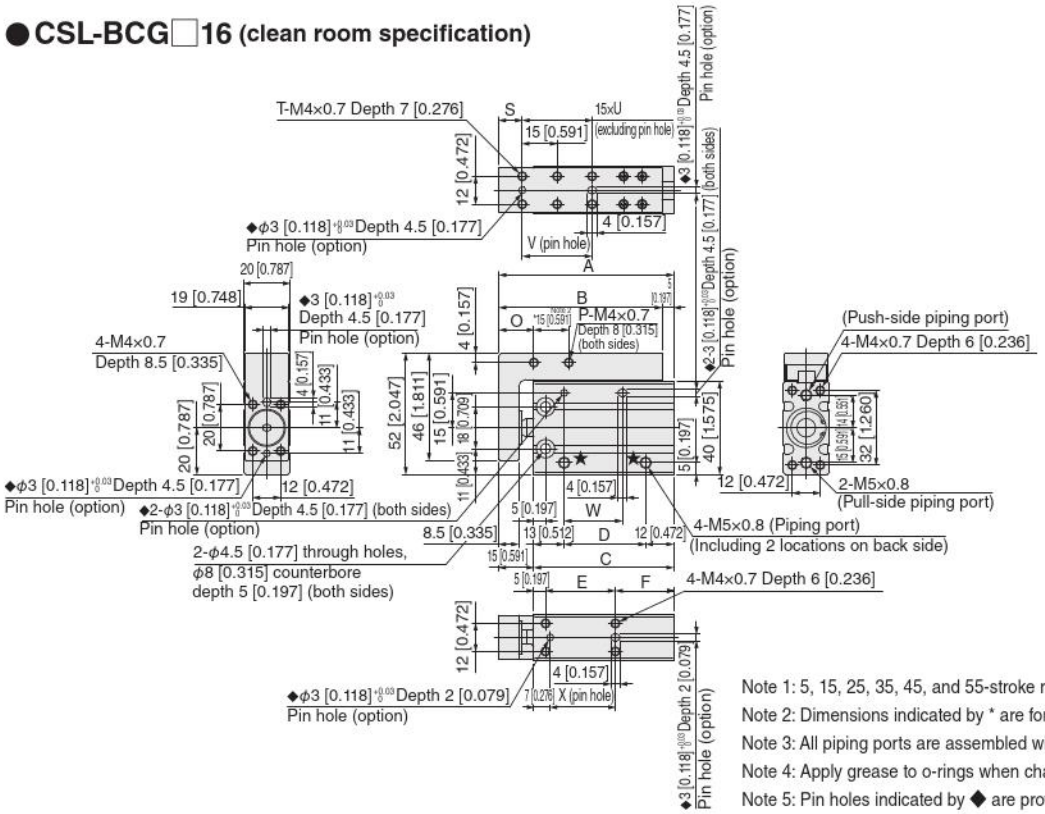

Note 1: 5, 15, 25, 35, 45, and 55-stroke models are available with collar insertion.
Note 2: Dimensions indicated by * are for models with a stroke of 15 or more.
Note 3: All piping ports are assembled with plugs, except those indicated by ★.
Note 4: Apply grease to o-rings when changing plug assemblies.
Note 5: Pin holes indicated by ◆ are provided only when selected as an option (N).

Stroke	A	B	C	D	E	F	O	P	S	T	U	V	W	X
5, 10	55 [2.165]	50 [1.969]	40 [1.575]	15 [0.591]	15 [0.591]	20 [0.787]	12 [0.472]	2 [0.079]	5 [0.197]	4 [0.157]	–	15 [0.591]	15 [0.591]	13 [0.512]
15, 20	65 [2.559]	60 [2.362]	50 [1.969]	25 [0.984]	20 [0.787]	25 [0.984]	15 [0.591]	4 [0.157]	10 [0.394]	4 [0.157]	–	15 [0.591]	15 [0.591]	18 [0.709]
25, 30	75 [2.953]	70 [2.756]	60 [2.362]	35 [1.378]	30 [1.181]	25 [0.984]	15 [0.591]	4 [0.157]	10 [0.394]	6 [0.236]	2 [0.079]	30 [1.181]	25 [0.984]	28 [1.102]
35, 40	85 [3.346]	80 [3.150]	70 [2.756]	45 [1.772]	40 [1.575]	25 [0.984]	15 [0.591]	4 [0.157]	10 [0.394]	6 [0.236]	2 [0.079]	30 [1.181]	25 [0.984]	38 [1.496]
45, 50	95 [3.740]	90 [3.543]	80 [3.150]	55 [2.165]	50 [1.969]	25 [0.984]	15 [0.591]	4 [0.157]	10 [0.394]	8 [0.315]	3 [0.118]	45 [1.772]	35 [1.378]	48 [1.890]
55, 60	105 [4.134]	100 [3.937]	90 [3.543]	65 [2.559]	60 [2.362]	25 [0.984]	15 [0.591]	4 [0.157]	10 [0.394]	10 [0.394]	4 [0.157]	45 [1.772]	35 [1.378]	58 [2.283]

● CSL-BCG□20 (clean room specification)

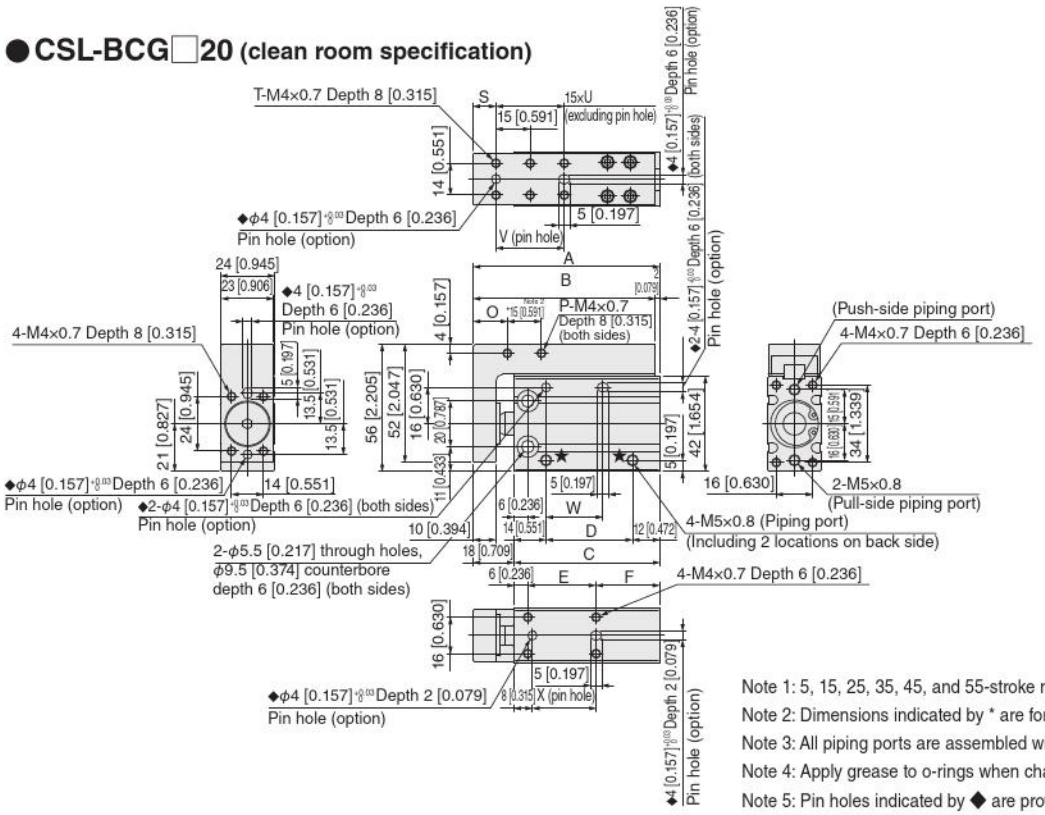

Note 1: 5, 15, 25, 35, 45, and 55-stroke models are available with collar insertion.
Note 2: Dimensions indicated by * are for models with a stroke of 15 or more.
Note 3: All piping ports are assembled with plugs, except those indicated by ★.
Note 4: Apply grease to o-rings when changing plug assemblies.
Note 5: Pin holes indicated by ◆ are provided only when selected as an option (N).

Stroke	A	B	C	D	E	F	O	P	S	T	U	V	W	X
5, 10	62 [2.441]	60 [2.362]	44 [1.732]	18 [0.709]	15 [0.591]	23 [0.906]	12 [0.472]	2 [0.079]	5 [0.197]	4 [0.157]	–	15 [0.591]	15 [0.591]	13 [0.512]
15, 20	72 [2.835]	70 [2.756]	54 [2.126]	28 [1.102]	20 [0.787]	28 [1.102]	15 [0.591]	4 [0.157]	10 [0.394]	4 [0.157]	–	15 [0.591]	15 [0.591]	18 [0.709]
25, 30	82 [3.228]	80 [3.150]	64 [2.520]	38 [1.496]	30 [1.181]	28 [1.102]	15 [0.591]	4 [0.157]	10 [0.394]	6 [0.236]	2 [0.079]	30 [1.181]	25 [0.984]	28 [1.102]
35, 40	92 [3.622]	90 [3.543]	74 [2.913]	48 [1.890]	40 [1.575]	28 [1.102]	15 [0.591]	4 [0.157]	10 [0.394]	6 [0.236]	2 [0.079]	30 [1.181]	25 [0.984]	38 [1.496]
45, 50	102 [4.016]	100 [3.937]	84 [3.307]	58 [2.283]	50 [1.969]	28 [1.102]	15 [0.591]	4 [0.157]	10 [0.394]	8 [0.315]	3 [0.118]	45 [1.772]	35 [1.378]	48 [1.890]
55, 60	112 [4.409]	110 [4.331]	94 [3.701]	68 [2.677]	60 [2.362]	28 [1.102]	15 [0.591]	4 [0.157]	10 [0.394]	10 [0.394]	4 [0.157]	45 [1.772]	35 [1.378]	58 [2.283]

Double acting clean system compatible cylinder with guide dimensions (mm [in.])

●CSL-BCG□25 (clean room specification)

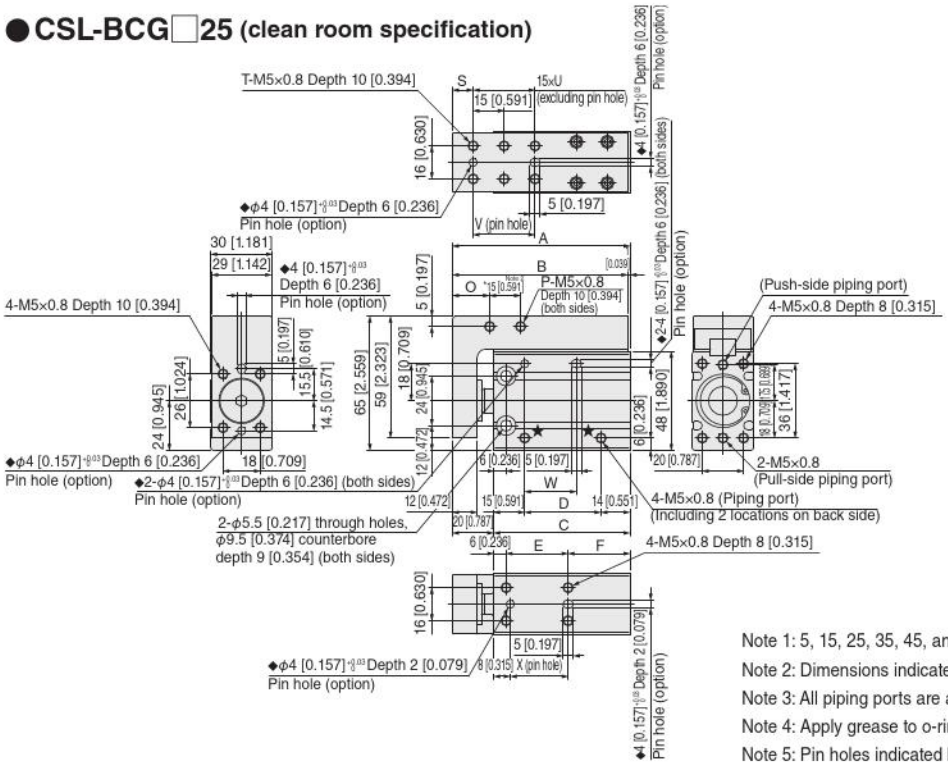

Note 1: 5, 15, 25, 35, 45, and 55-stroke models are available with collar insertion.
Note 2: Dimensions indicated by * are for models with a stroke of 15 or more.
Note 3: All piping ports are assembled with plugs, except those indicated by ★.
Note 4: Apply grease to o-rings when changing plug assemblies.
Note 5: Pin holes indicated by ◆ are provided only when selected as an option (N).

Stroke	A	B	C	D	E	F	O	P	S	T	U	V	W	X
5, 10	66 [2.598]	65 [2.559]	46 [1.811]	17 [0.669]	15 [0.591]	25 [0.984]	12 [0.472]	2 [0.079]	5 [0.197]	4 [0.157]	–	15 [0.591]	15 [0.591]	15 [0.591]
15, 20	76 [2.992]	75 [2.953]	56 [2.205]	27 [1.063]	20 [0.787]	30 [1.181]	18 [0.709]	4 [0.157]	10 [0.394]	4 [0.157]	–	15 [0.591]	15 [0.591]	18 [0.709]
25, 30	86 [3.386]	85 [3.346]	66 [2.598]	37 [1.457]	30 [1.181]	30 [1.181]	18 [0.709]	4 [0.157]	10 [0.394]	6 [0.236]	2 [0.079]	30 [1.181]	25 [0.984]	28 [1.102]
35, 40	96 [3.780]	95 [3.740]	76 [2.992]	47 [1.850]	40 [1.575]	30 [1.181]	18 [0.709]	4 [0.157]	10 [0.394]	6 [0.236]	2 [0.079]	30 [1.181]	25 [0.984]	38 [1.496]
45, 50	106 [4.173]	105 [4.134]	86 [3.386]	57 [2.244]	50 [1.969]	30 [1.181]	18 [0.709]	4 [0.157]	10 [0.394]	8 [0.315]	3 [0.118]	45 [1.772]	35 [1.378]	48 [1.890]
55, 60	116 [4.567]	115 [4.528]	96 [3.780]	67 [2.638]	60 [2.362]	30 [1.181]	18 [0.709]	4 [0.157]	10 [0.394]	10 [0.394]	4 [0.157]	45 [1.772]	35 [1.378]	58 [2.283]

●CSL-BCG□32
(clean room specification)

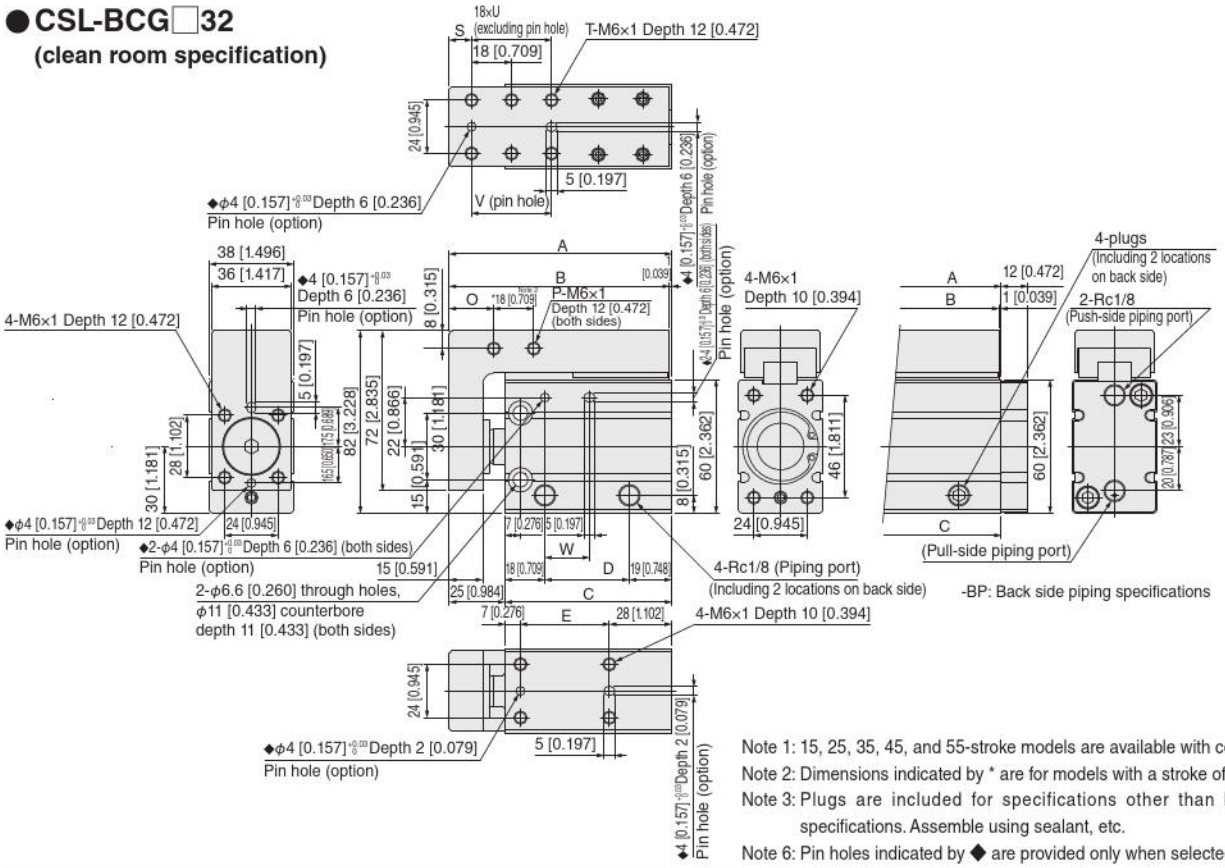

Note 1: 15, 25, 35, 45, and 55-stroke models are available with collar insertion.
Note 2: Dimensions indicated by * are for models with a stroke of 25 or more.
Note 3: Plugs are included for specifications other than back side piping specifications. Assemble using sealant, etc.
Note 6: Pin holes indicated by ◆ are provided only when selected as an option (N).

Stroke	A	B	C	D	E	O	P	S	T	U	V	W
10	80 [3.150]	79 [3.110]	55 [2.165]	18 [0.709]	20 [0.787]	16 [0.630]	2 [0.079]	6 [0.236]	4 [0.157]	–	18 [0.709]	20 [0.787]
15, 20	90 [3.543]	89 [3.504]	65 [2.559]	28 [1.102]	30 [1.181]	20 [0.787]	2 [0.079]	10 [0.394]	4 [0.157]	–	18 [0.709]	20 [0.787]
25, 30	100 [3.937]	99 [3.898]	75 [2.953]	38 [1.496]	40 [1.575]	20 [0.787]	4 [0.157]	10 [0.394]	6 [0.236]	2 [0.079]	36 [1.417]	30 [1.181]
35, 40	110 [4.331]	109 [4.291]	85 [3.346]	48 [1.890]	50 [1.969]	20 [0.787]	4 [0.157]	10 [0.394]	6 [0.236]	2 [0.079]	36 [1.417]	30 [1.181]
45, 50	120 [4.724]	119 [4.685]	95 [3.740]	58 [2.283]	60 [2.362]	20 [0.787]	4 [0.157]	10 [0.394]	8 [0.315]	3 [0.118]	54 [2.126]	40 [1.575]
55, 60	130 [5.118]	129 [5.079]	105 [4.134]	68 [2.677]	70 [2.756]	20 [0.787]	4 [0.157]	10 [0.394]	8 [0.315]	3 [0.118]	54 [2.126]	40 [1.575]

Double acting clean system compatible cylinder with guide dimensions (mm [in.])

● CSL-BCG□40 (clean room specification)

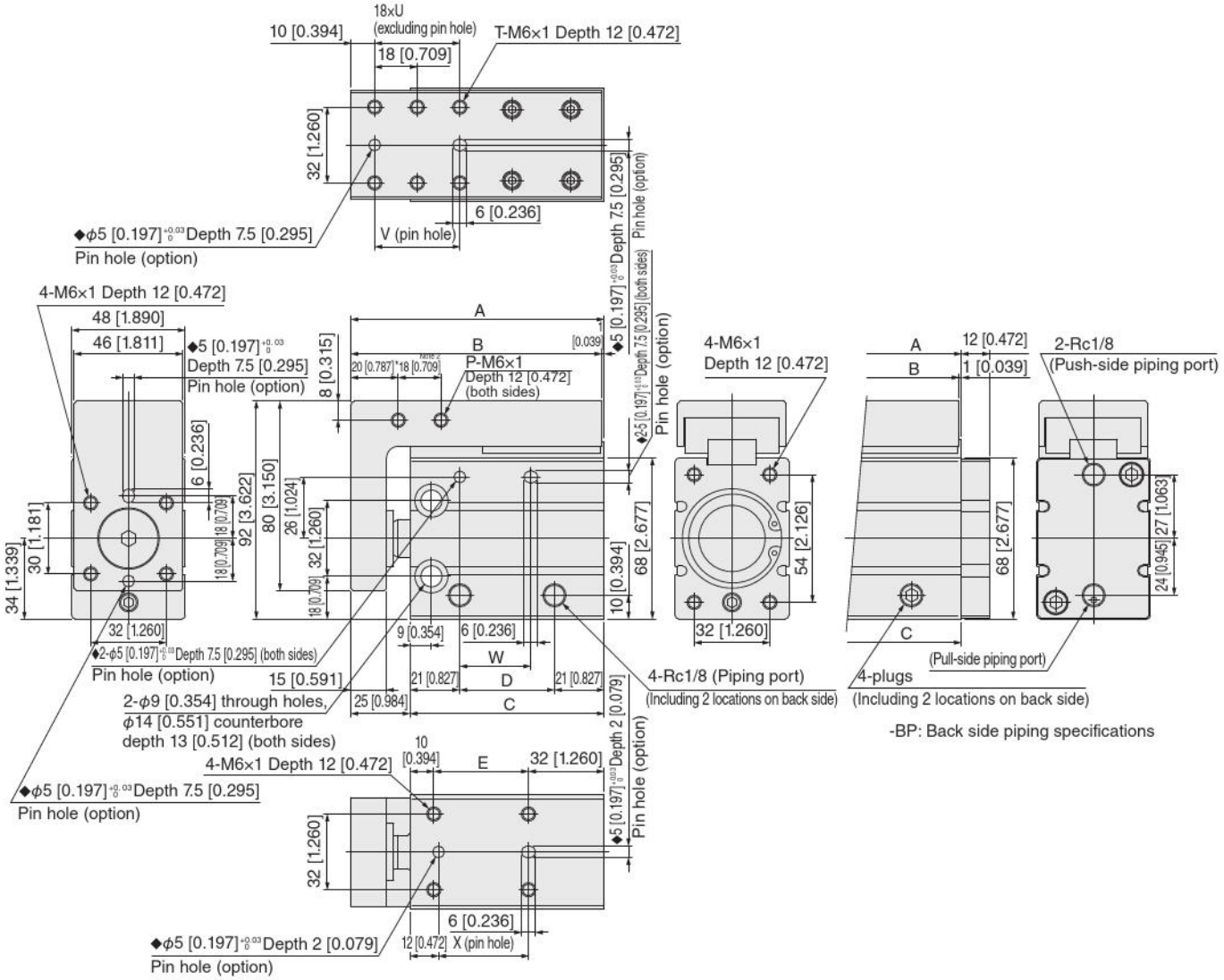

Note 1: 15, 25, 35, 45, and 55-stroke models are available with collar insertion.
Note 2: Dimensions indicated by * are for models with a stroke of 25 or more.
Note 3: Plugs are included for specifications other than back side piping specifications. Assemble using sealant, etc.
Note 6: Pin holes indicated by ◆ are provided only when selected as an option (N).

Stroke	A	B	C	D	E	P	T	U	V	W	X
10, 15, 20	97 [3.819]	96 [3.780]	72 [2.835]	30 [1.181]	30 [1.181]	2 [0.079]	4 [0.157]	–	18 [0.709]	25 [0.984]	28 [1.102]
25, 30	107 [4.213]	106 [4.173]	82 [3.228]	40 [1.575]	40 [1.575]	4 [0.157]	6 [0.236]	2 [0.079]	36 [1.417]	30 [1.181]	38 [1.496]
35, 40	117 [4.606]	116 [4.567]	92 [3.622]	50 [1.969]	50 [1.969]	4 [0.157]	6 [0.236]	2 [0.079]	36 [1.417]	30 [1.181]	48 [1.890]
45, 50	127 [5.000]	126 [4.961]	102 [4.016]	60 [2.362]	60 [2.362]	4 [0.157]	8 [0.315]	3 [0.118]	54 [2.126]	40 [1.575]	58 [2.283]
55, 60	137 [5.394]	136 [5.354]	112 [4.409]	70 [2.756]	70 [2.756]	4 [0.157]	8 [0.315]	3 [0.118]	54 [2.126]	40 [1.575]	68 [2.677]

Bracket

Order codes for brackets only

BCZ-BK □

Cylinder bore

10: For ϕ**10**	**40**: For ϕ**40**
12: For ϕ**12**	**50**: For ϕ**50**
16: For ϕ**16**	**63**: For ϕ**63**
20: For ϕ**20**	**80**: For ϕ**80**
25: For ϕ**25**	**100**: For ϕ**100**
32: For ϕ**32**	**125**: For ϕ**125**

Note: Cannot be mounted on cylinders with guides (**BCG**□).

Bracket dimensions (mm)

● ϕ10 to ϕ32

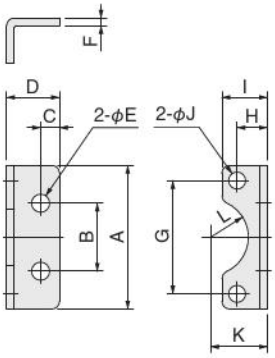

● ϕ40 to ϕ80

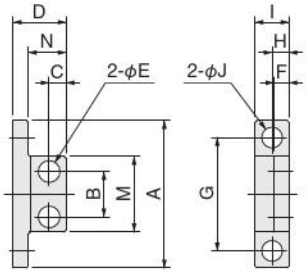

● ϕ100 to ϕ125

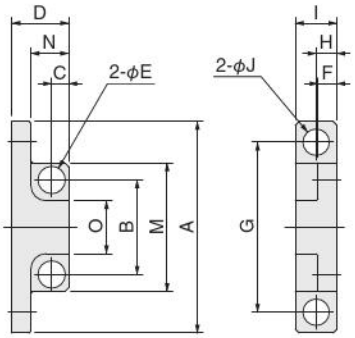

● Mounting bolt (2)

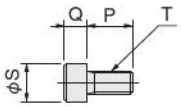

Material: Stainless steel (only M16 is steel)

Bore \ Symbol	A	B	C	D	E	F	G	H	I	J	K	L	M	N	O	P	Q	S	T	Materials	Mass (g)
10	22	16	3	10	3.8	1	16	7	9.3	3.4	8	R5	–	–	–	5	3	4.5	M3×0.5	Stainless steel	4
12	26	14	4	13	4.8	1	19	8	11	4.5	8	R5	–	–	–	4	4	5.5	M4×0.7	Stainless steel	6
16	28	14	4	13	4.8	1.5	22	7	10	3.5	11	R7	–	–	–	5	3	5.5	M3×0.5	Stainless steel	7
20	34	14	4	13	4.8	2	26	8	12	4.5	13	R8	–	–	–	8	4	7	M4×0.7	Stainless steel	12
25	38	18	5	14	4.8	2	30	8	12	4.5	15	R10	–	–	–	8	4	7	M4×0.7	Stainless steel	14
32	48	22	6	18	5.8	2	38	8	13	5.5	19	R12	–	–	–	8	5	8.5	M5×0.8	Stainless steel	24
40	52	18	6	20	6.8	5	40	7	13	6.5	–	–	28	14	–	12	6	10	M6×1	Aluminum alloy	25
50	66	24	7	24	9.5	5	52	7	15	9	–	–	37	18	–	12	8	13	M8×1.25	Aluminum alloy	45
63	78	24	9	28	11.5	8	60	9	18	11	–	–	40	20	–	16	10	16	M10×1.5	Aluminum alloy	80
80	90	30	10	36	14.5	8	70	10	20	14	–	–	48	28	–	20	12	18	M12×1.75	Aluminum alloy	128
100	112	50	9	30	14.5	10	90	11	22	14	–	–	68	20	28	20	12	18	M12×1.75	Aluminum alloy	167
125	140	58	14	42	18.5	14	110	15	30	18	–	–	82	30	30	35	16	24	M16×2	Aluminum alloy	410

Note: Mass includes mass of 2 supplied bolts

Bracket

Order codes for brackets only

BCZ-BK □

Cylinder bore

10: For ϕ**0.394** **40**: For ϕ**1.575**
12: For ϕ**0.472** **50**: For ϕ**1.969**
16: For ϕ**0.630** **63**: For ϕ**2.480**
10: For ϕ**0.394** **40**: For ϕ**1.575**
25: For ϕ**0.984** **100**: For ϕ**3.937**
32: For ϕ**1.260** **125**: For ϕ**4.921**

Note: Cannot be mounted on cylinders with guides (**BCG**□).

Bracket dimensions (in.)

● ϕ0.394 to ϕ1.260

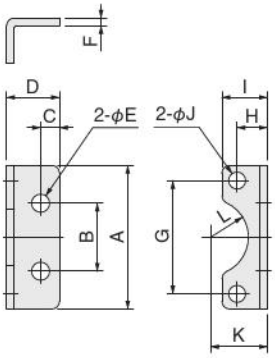

● ϕ1.575 to ϕ3.150

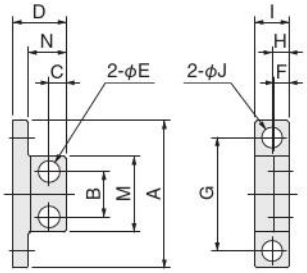

● ϕ3.937 to ϕ4.921

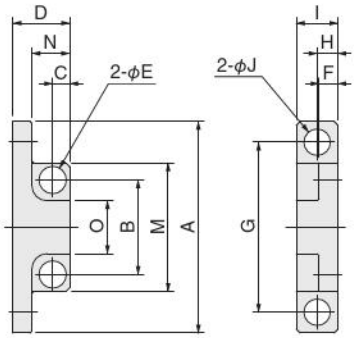

● Mounting bolt (2)

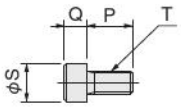

Material: Stainless steel (only M16 is steel)

Bore \ Symbol	A	B	C	D	E	F	G	H	I	J	K	L	M	N	O	P	Q	S	T	Materials	Mass (oz)
10	0.866	0.630	0.118	0.394	0.150	0.039	0.630	0.276	0.366	0.134	0.315	R0.197	–	–	–	0.197	0.118	0.177	M3×0.5	Stainless steel	0.14
12	1.024	0.551	0.157	0.512	0.189	0.039	0.748	0.315	0.433	0.177	0.315	R0.197	–	–	–	0.157	0.157	0.217	M4×0.7	Stainless steel	0.21
16	1.102	0.551	0.157	0.512	0.189	0.059	0.866	0.276	0.394	0.138	0.433	R0.276	–	–	–	0.197	0.118	0.217	M3×0.5	Stainless steel	0.25
20	1.339	0.551	0.157	0.512	0.189	0.079	1.024	0.315	0.472	0.177	0.512	R0.315	–	–	–	0.315	0.157	0.276	M4×0.7	Stainless steel	0.42
25	1.496	0.709	0.197	0.551	0.189	0.079	1.181	0.315	0.472	0.177	0.591	R0.394	–	–	–	0.315	0.157	0.276	M4×0.7	Stainless steel	0.49
32	1.890	0.866	0.236	0.709	0.228	0.079	1.496	0.315	0.512	0.217	0.748	R0.472	–	–	–	0.315	0.197	0.335	M5×0.8	Stainless steel	0.85
40	2.047	0.709	0.236	0.787	0.268	0.197	1.575	0.276	0.512	0.256	–	–	1.102	0.551	–	0.472	0.236	0.394	M6×1	Aluminum alloy	0.88
50	2.598	0.945	0.276	0.945	0.374	0.197	2.047	0.276	0.591	0.354	–	–	1.457	0.709	–	0.472	0.315	0.512	M8×1.25	Aluminum alloy	1.59
63	3.071	0.945	0.354	1.102	0.453	0.315	2.362	0.354	0.709	0.433	–	–	1.575	0.787	–	0.630	0.394	0.630	M10×1.5	Aluminum alloy	2.82
80	3.543	1.181	0.394	1.417	0.571	0.315	2.756	0.394	0.787	0.551	–	–	1.890	1.102	–	0.787	0.472	0.709	M12×1.75	Aluminum alloy	4.51
100	4.409	1.969	0.354	1.181	0.571	0.394	3.543	0.433	0.866	0.551	–	–	2.677	0.787	1.102	0.787	0.472	0.709	M12×1.75	Aluminum alloy	5.89
125	5.512	2.283	0.551	1.654	0.728	0.551	4.331	0.591	1.181	0.709	–	–	3.228	1.181	1.181	1.378	0.630	0.945	M16×2	Aluminum alloy	14.46

Note: Mass includes mass of 2 supplied bolts

Piston rod end shape pattern diagrams

There are seven patternized piston rod end shapes. A non-standard end shaped cylinder can be order made by simply filling in the items on the order that has the required shape drawn on it. This applies to all types of basic cylinders. Contact Koganei for order forms with pattern shaped drawn on them.

Order code example

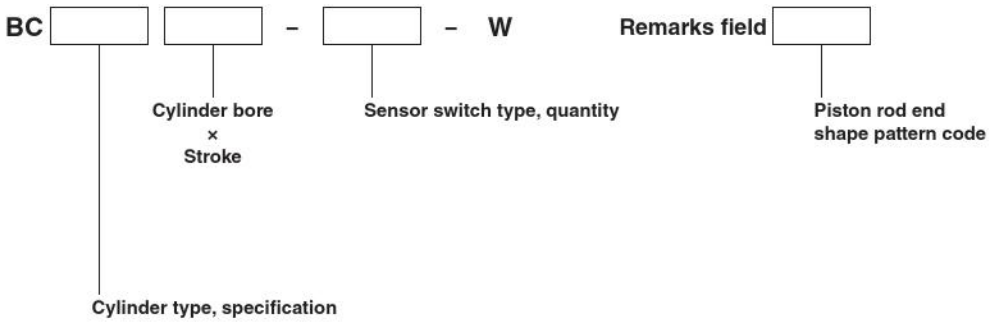

Note: For clean room specifications, **CS-** or **CSL-** is appended before **BC**. For details, see the pages for the corresponding order codes.

Piston rod end shape pattern diagrams (7 types)

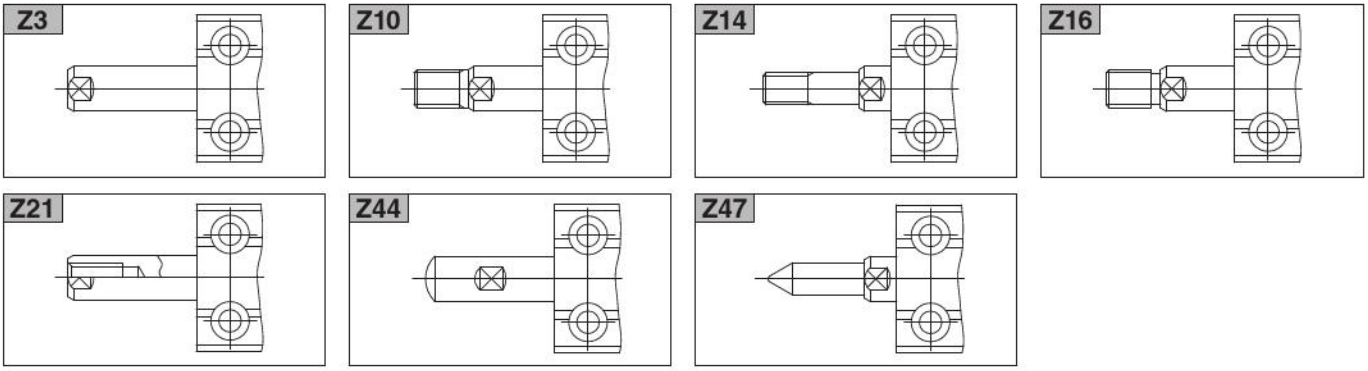

Additional Parts

Note 1: ϕ6 [0.236], ϕ8 [0.315], and ϕ10 [0.394] cannot be disassembled.
2: Be careful that the steel balls do not fall out from the linear guide when doing maintenance on cylinders with guides.

● Packing set for double acting type (including models with guides)

BCZ-PK-□ (For standard specification)

Cylinder bore
12: For BC12, BCG(N)12
16: For BC16, BCG(N)16
20: For BC20, BCG(N)20
25: For BC25, BCG(N)25
32: For BC32, BCG(N)32
40: For BC40, BCG(N)40
50: For BC50
63: For BC63
80: For BC80
100: For BC100
125: For BC125

* 1 rod packing, 1 piston packing, 1 o-ring, and 1 retaining ring

BCZ-PK-R-□ (For corrosion resistant, clean room specifications)

Cylinder bore
12: For BCR12, CS(L)-BC12, BCG(N)R12, CSL-BCG(N)12
16: For BCR16, CS(L)-BC16, BCG(N)R16, CSL-BCG(N)16
20: For BCR20, CS(L)-BC20, BCG(N)R20, CSL-BCG(N)20
25: For BCR25, CS(L)-BC25, BCG(N)R25, CSL-BCG(N)25
32: For BCR32, CS(L)-BC32, BCG(N)R32, CSL-BCG(N)32
40: For BCR40, CS(L)-BC40, BCG(N)R40, CSL-BCG(N)40
50: For BCR50, CS(L)-BC50
63: For BCR63, CS(L)-BC63
80: For BCR80
100: For BCR100
125: For BCR125

* 1 rod packing, 1 piston packing, 1 o-ring, and 1 retaining ring

BCZ-PK-F-□ (For heat resistant specification)

Cylinder bore
12: For BCF12, BCG(N)F12
16: For BCF16, BCG(N)F16
20: For BCF20, BCG(N)F20
25: For BCF25, BCG(N)F25
32: For BCF32, BCG(N)F32
40: For BCF40, BCG(N)F40
50: For BCF50
63: For BCF63
80: For BCF80
100: For BCF100
125: For BCF125

* 1 rod packing, 1 piston packing, 1 o-ring, and 1 retaining ring

BCZ-PK-Y-□ (For scraper specification)

Cylinder bore
12: For BCY12
16: For BCY16
20: For BCY20
25: For BCY25
32: For BCY32
40: For BCY40
50: For BCY50
63: For BCY63
80: For BCY80
100: For BCY100
125: For BCY125

* 1 rod packing, 1 piston packing, 1 o-ring, 1 scraper, and 1 retaining ring

● Grease (30 g [1.06 oz])

GR-HA-030 (For standard, corrosion resistant, scraper specifications) (H1-compatible grease)
GR-FA-030 (For clean room specification) (H1-compatible grease)
GR-FB-030 (For heat resistant specification)

* 30 g [1.06 oz] of NSF H1-certified grease contained
  Note: If you purchase a packing set and perform disassembly and reassembly, use this grease.
* Guideline for the amount of grease to use (for a single 30-stroke model)
  BC20:2 g [0.07 oz]
  BC63:4 g [0.14 oz]
  BC125:10 g [0.35 oz]

NOTE Products that have been disassembled and reassembled are not covered by the warranty.

Additional Parts

Note: ϕ6 [0.236], ϕ8 [0.315], and ϕ10 [0.394] cannot be disassembled.

● Packing set for double acting double rod end type

BCZ-PK-D □ **(For standard specification)**

Cylinder bore
12: For BCD12
16: For BCD16
20: For BCD20
25: For BCD25
32: For BCD32
40: For BCD40
50: For BCD50
63: For BCD63
80: For BCD80
100: For BCD100
125: For BCD125

BCZ-PK-R-D □ **(For corrosion resistant specification)**

Cylinder bore
12: For BCDR12
16: For BCDR16
20: For BCDR20
25: For BCDR25
32: For BCDR32
40: For BCDR40
50: For BCDR50
63: For BCDR63
80: For BCDR80
100: For BCDR100
125: For BCDR125

* 2 rod packings, 1 piston packing, 1 o-ring, and 1 retaining ring

● Packing set for single acting pull and pull type

BCZ-PK-S □ **(For standard specification)**

Cylinder bore
12: For BCSA12, BCTA12
16: For BCSA16, BCTA16
20: For BCSA20, BCTA20
25: For BCSA25, BCTA25
32: For BCSA32, BCTA32
40: For BCSA40, BCTA40
50: For BCSA50, BCTA50

BCZ-PK-R-S □ **(For corrosion resistant specification)**

Cylinder bore
12: For BCSAR12, BCTAR12
16: For BCSAR16, BCTAR16
20: For BCSAR20, BCTAR20
25: For BCSAR25, BCTAR25
32: For BCSAR32, BCTAR32
40: For BCSAR40, BCTAR40
50: For BCSAR50, BCTAR50

* 1 rod packing, 1 piston packing, 1 o-ring, 1 retaining ring, and 1 spring

● Piping port plugs for cylinders with guides

BCZ-PM □ **(For standard, corrosion resistant, clean room specifications)**

Thread size
3: For M3 (For BCG(N)8, BCG(N)R8, CSL-BCG(N)8)
5: For M5 (For BCG(N)12, BCG(N)R12, CSL-BCG(N)12, BCG(N)16, BCG(N)R16, CSL-BCG(N)16, BCG(N)20, BCG(N)R20, CSL-BCG(N)20, BCG(N)25, BCG(N)R25, CSL-BCG(N)25)

* 4 plugs assembled with o-rings in each bag

BCZ-F-PM □ **(For heat resistant specification)**

Thread size
3: For M3 (For BCG(N)F8)
5: For M5 (For BCG(N)F12, BCG(N)F16, BCG(N)F20, BCG(N)F25)

● Back side piping block for cylinders with guides

BCZ-BP □ **(For standard specification)**

Cylinder bore
32: For BCG(N)32
40: For BCG(N)40

BCZ-R-BP □ **(For corrosion resistant, clean room specifications)**

Cylinder bore
32: For BCG(N)R32, CSL-BCG(N)32
40: For BCG(N)R40, CSL-BCG(N)40

BCZ-F-BP □ **(For heat resistant specification)**

Cylinder bore
32: For BCG(N)F32
40: For BCG(N)F40

* 1 back side piping block with press fitted steel balls
1 each of two types of o-rings,
2 mounting bolts

NOTE Products that have been disassembled and reassembled are not covered by the warranty.

Sensor switches

Solid state type, reed switch type

● Robot cable is standard equipment

Lead wire flexibility is excellent because the conductor used is the same as for robot cables.

Specifications

● Solid State Type

Item \ Model	ZE135□	ZE155□	ZE175□	ZE235□	ZE255□	ZE275□
Wiring method	2-lead wire	3-lead wire with NPN output	3-lead wire with PNP output	2-lead wire	3-lead wire with NPN output	3-lead wire with PNP output
Lead wire direction	Horizontal			Vertical		
Power supply voltage	–	4.5 to 28 VDC		–	4.5 to 28 VDC	
Load voltage	10 to 28 VDC	4.5 to 28 VDC		10 to 28 VDC	4.5 to 28 VDC	
Load current	2.5 to 20 mA (at 25°C [77°F], and 10 mA at 60°C [140°F])	40mA MAX.		2.5 to 20 mA (at 25°C [77°F], and 10 mA at 60°C [140°F])	40mA MAX.	
Consumption current	–	8mA MAX. (DC24V)	10mA MAX. (DC24V)	–	8mA MAX. (DC24V)	10mA MAX. (DC24V)
Internal voltage drop Note 1	4V MAX.	2V max. (0.8 V max if load is less than 10 mA)		4V MAX.	2V max. (0.8 V max if load is less than 10 mA)	
Leakage current	0.7mA MAX. (DC24V,25°C [77°F])	50 μA MAX. (24 VDC)		0.7mA MAX. (DC24V,25°C [77°F])	50 μA MAX. (24 VDC)	
Response time	1ms MAX.					
Insulation resistance	100 MΩ min. (at 500 VDC megger, between case and lead wire terminal)					
Dielectric strength	500 VAC (50/60 Hz) 1 minute (between case and lead wire terminal)					
Shock resistance Note 2	294.2 m/s² [30 G] (non-repeated)					
Vibration resistance Note 2	88.3 m/s² [9 G] (total amplitude of 1.5 mm [0.059 in.], 10 to 55 Hz)					
Protection from environment	IP67 (IEC standard), JIS C0920 (watertight type)					
Operation indicators	Red LED indicator lit when on					
Lead wires	PCCV0.2SQ x 2-lead (brown and blue) x ℓ Note 3	PCCV0.15SQ x 3-lead (brown, blue, and black) x ℓ Note 3		PCCV0.2SQ x 2-lead (brown and blue) x ℓ Note 3	PCCV0.15SQ x 3-lead (brown, blue, and black) x ℓ Note 3	
Ambient temperature	0° to 60°C [32 to 140°F]					
Storage temperature range	–10° to 70°C [14 to 158°F]					
Mass	15 g [0.53 oz] (for lead wire length A: 1000 mm [39.370 in.]), 35 g [1.23 oz] (for lead wire length B: 3000 mm [118.1 in.]), 15 g [0.53 oz] (for lead wire length 30 mm [1.181 in.] with M8 connector)					

Note 1: Internal voltage drop changes with the load current.
2: According to Koganei test standards.
3: Lead wire length ℓ: A; 1000 mm [39.370 in.], B; 3000 mm [118.1 in.], G; 300 mm [11.811 in.] with M8 connector only on the ZE175□, ZE275□

● Reed Switch Type

Item \ Model	ZE101□		ZE102□		ZE201□		ZE202□	
Wiring method	2-lead wire							
Lead wire direction	Horizontal				Vertical			
Load voltage	5 to 28 VDC	85 to 115 VAC (r.m.s)	10 to 28 VDC	85 to 115 VAC (r.m.s)	5 to 28 VDC	85 to 115 VAC (r.m.s)	10 to 28 VDC	85 to 115 VAC (r.m.s)
Load current	40mA MAX.	20mA MAX.	5 to 40 mA	5 to 20 mA	40mA MAX.	20mA MAX.	5 to 40 mA	5 to 20 mA
Internal voltage drop Note 1	0.1V max. (for load current of 40 mA DC)		3.0V MAX.		0.1V max. (for load current of 40 mA DC)		3.0V MAX.	
Leakage current	0mA							
Response time	1ms MAX.							
Insulation resistance	100 MΩ min. (at 500 VDC megger, between case and lead wire terminal)							
Dielectric strength	1500 VAC (50/60 Hz) 1 minute (between case and lead wire terminal)							
Shock resistance Note 2	294.2 m/s² [30 G] (non-repeated)							
Vibration resistance Note 2	88.3 m/s² [9 G] (total amplitude of 1.5 mm [0.059 in.], 10 to 55 Hz), resonance frequency 2570 ±250 Hz							
Protection from environment	IP67 (IEC standard), JIS C0920 (watertight type)							
Operation indicators	None		Red LED indicator lit when on		None		Red LED indicator lit when on	
Lead wires	PCCV0.2SQ x 2-lead (brown and blue) x ℓ Note 3							
Ambient temperature	0° to 60°C [32 to 140°F]							
Storage temperature range	–10° to 70°C [14 to 158°F]							
Contact protection measure	Required (see page 98 under contact protection.)							
Mass	15 g [0.53 oz] (for lead wire length A: 1000 mm [39.370 in.]), 35 g [1.23 oz] (for lead wire length B: 3000 mm [118.1 in.])							

Note 1: Internal voltage drop changes with the load current.
2: According to Koganei test standards.
3: Lead wire length ℓ: A; 1000 mm [39.370 in.], B; 3000 mm [118.1 in.]

Sensor switches

Two-color LED solid state type

● Robot cable is standard equipment

Lead wire flexibility is excellent because the conductor used is the same as for robot cables.

Specifications

● Two-color LED solid state type

Item \ Model	ZE137□	ZE157□	ZE177□	ZE237□	ZE257□	ZE277□
Wiring method	2-lead wire	3-lead wire with NPN output	3-lead wire with PNP output	2-lead wire	3-lead wire with NPN output	3-lead wire with PNP output
Lead wire direction	Horizontal			Vertical		
Power supply voltage	–	4.5 to 28 VDC		–	4.5 to 28 VDC	
Load voltage	DC10 to 28V	4.5 to 28 VDC		DC10 to 28V	4.5 to 28 VDC	
Load current	2.5 to 20 mA (at 25°C [77°F], and 10 mA at 60°C [140°F])	40mA MAX.		2.5 to 20 mA (at 25°C [77°F], and 10 mA at 60°C [140°F])	40mA MAX.	
Consumption current	–	8mA MAX. (DC24V)	10mA MAX. (DC24V)	–	8mA MAX. (DC24V)	10mA MAX. (DC24V)
Internal voltage drop Note 1	4V MAX.	2V max. (0.8 V max if load is less than 10 mA)		4V MAX.	2V max. (0.8 V max if load is less than 10 mA)	
Leakage current	0.7 mA MAX. (24 VDC, 25°C [77°F])	50 µA MAX. (24 VDC)		0.7 mA MAX. (24 VDC, 25°C [77°F])	50 µA MAX. (24 VDC)	
Response time	1ms MAX.					
Insulation resistance	100 MΩ min. (at 500 VDC megger, between case and lead wire terminal)					
Dielectric strength	500 VAC (50/60 Hz) 1 minute (between case and lead wire terminal)					
Shock resistance Note 2	294.2 m/s² [30 G] (non-repeated)					
Vibration resistance Note 2	88.3 m/s² [9 G] (total amplitude of 1.5 mm [0.059 in.], 10 to 55 Hz)					
Protection from environment	IP67 (IEC standard), JIS C0920 (watertight type)					
Operation indicators	Appropriate operation range: Green LED indicator lit when on, operation range: Red LED indicator lit when on					
Lead wires	PCCV0.2SQ x 2-lead (brown and blue) x ℓ Note 3	PCCV0.15SQ x 3-lead (brown, blue, and black) x ℓ Note 3		PCCV0.2SQ x 2-lead (brown and blue) x ℓ Note 3	PCCV0.15SQ x 3-lead (brown, blue, and black) x ℓ Note 3	
Ambient temperature	0° to 60°C [32 to 140°F]					
Storage temperature range	–10° to 70°C [14 to 158°F]					
Mass	15 g [0.53 oz] (for lead wire length A: 1000 mm [39.370 in.]), 35 g [1.23 oz] (for lead wire length B: 3000 mm [118.1 in.]), 15 g [0.53 oz] (for lead wire length 300 mm [11.811 in.] with M8 connector)					

Note 1: Internal voltage drop changes with the load current.
2: According to Koganei test standards.
3: Lead wire length ℓ: A; 1000 mm [39.370 in.], B; 3000 mm [118.1 in.], G; 300 mm [11.811 in.] with M8 connector only on the ZE177□, ZE277□

Operation

● Explanation of operation of two-color LED solid state type

ZE137□, ZE157□, ZE177□, ZE237□, ZE257□, ZE277□

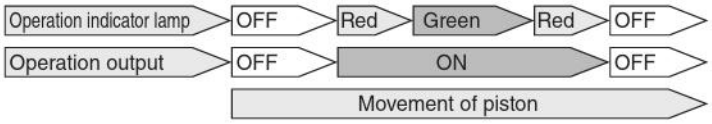

Note: The operating output may become unstable, due to the effects of the operating and installation environments, even if the appropriate operating range (green LED indicator lit) is fixed.

Diagram of inner circuits

● Solid State Type

● ZE135□, ZE235□

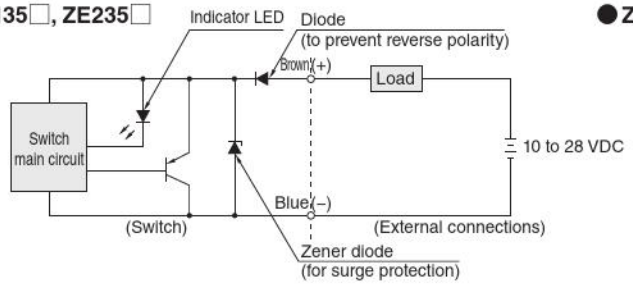

● ZE155□, ZE255□

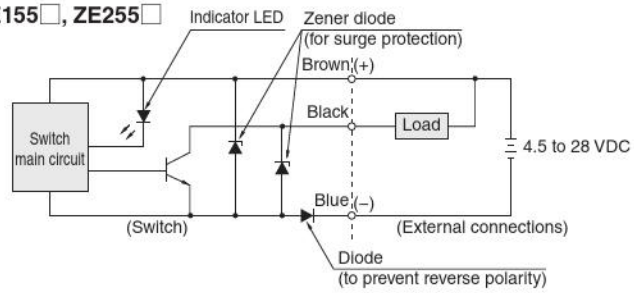

● ZE175□, ZE275□

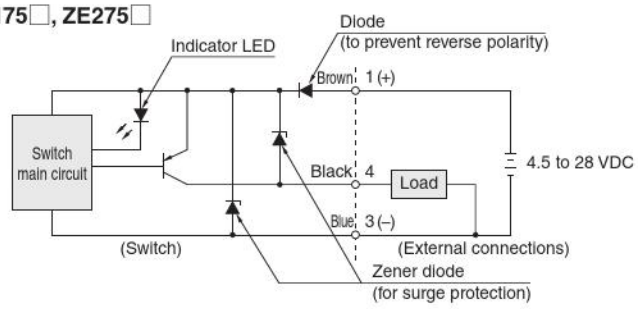

● Two-color LED Solid State Type

● ZE137□, ZE237□

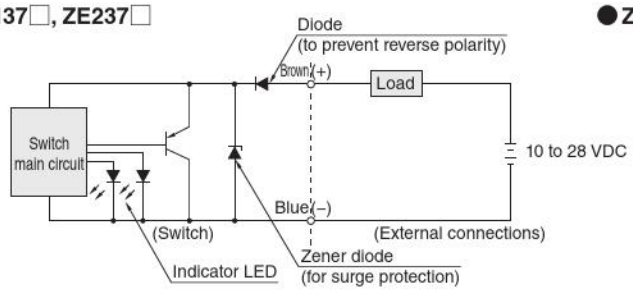

● ZE157□, ZE257□

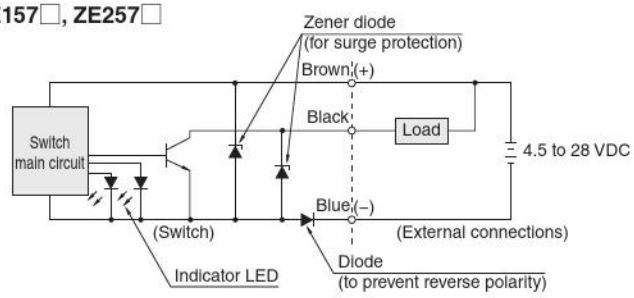

● ZE177□, ZE277□

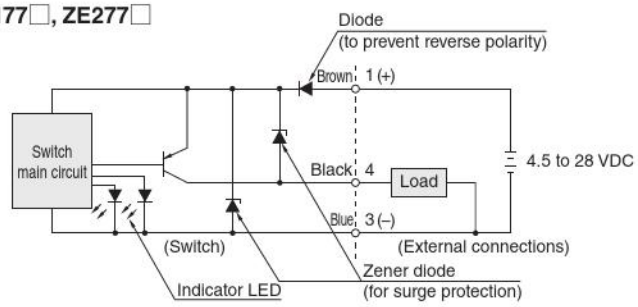

● Reed Switch Type

● ZE101□, ZE201□

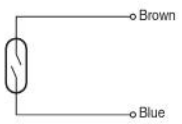

● ZE102□, ZE202□

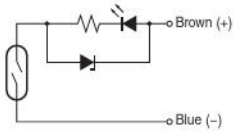

Sensor Switch Dimensions (mm [in.])

● Horizontal lead wire

● Solid state (ZE135□, ZE155□, ZE175□, ZE137□, ZE157□, ZE177□)

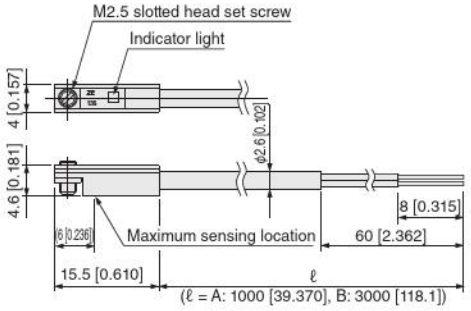

● Reed switch (ZE101□, ZE102□)

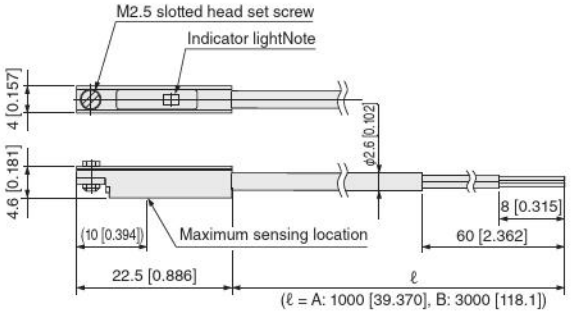

Note: Not available with the **ZE101**□.

● Solid state (ZE175G, ZE177G)

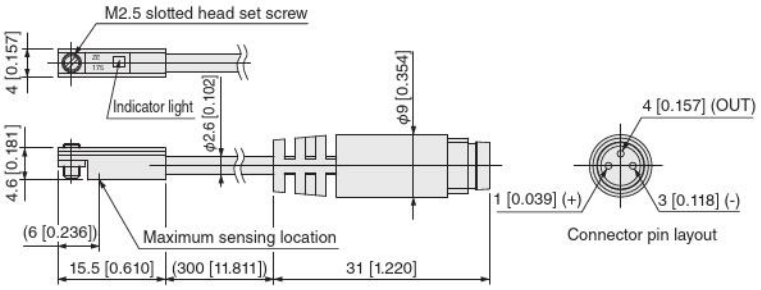

● Vertical lead wire

● Solid state (ZE235□, ZE255□, ZE275□, ZE237□, ZE257□, ZE277□)

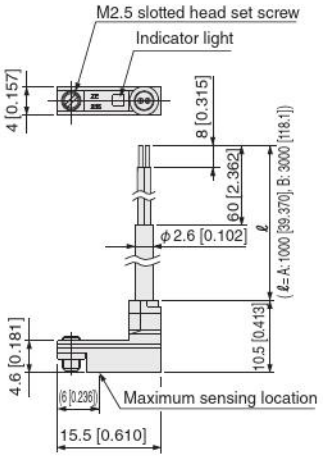

● Reed switch (ZE201□, ZE202□)

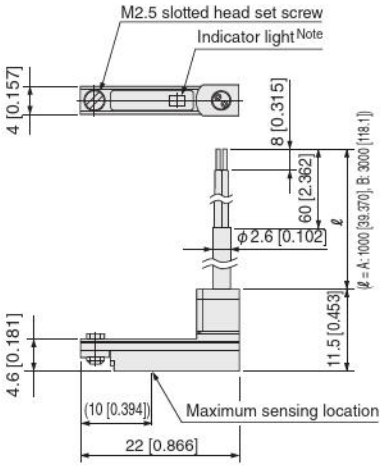

● Solid state (ZE275G, ZE277G)

Note: Not available with the **ZE201**□.

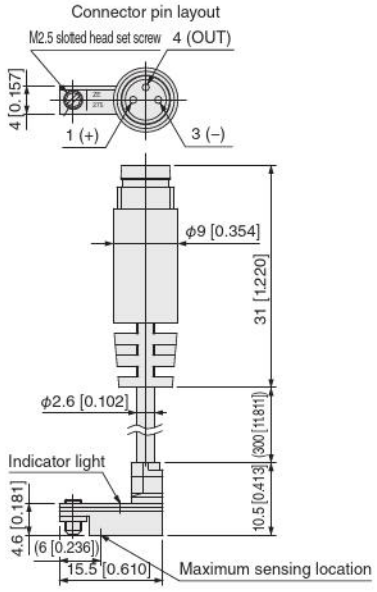

Contact Protection for Reed Sensor Switch

In order to use the reed sensor switch safely, take the contact protection measures listed below.

● For connecting an inductive load (electromagnetic relay)

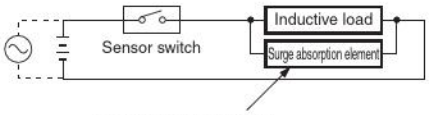

For DC: Diode or CR, etc.
For AC: CR etc.
Diode: Forward current should be more than the circuit current, and for reverse direction, dielectric strength should be 10 times greater or more than the circuit voltage.

C: 0.01 to 0.1μF
R: 1 to 4kΩ

● For capacitive surges

(When the lead wire length exceeds 10 m) [32.808 ft])

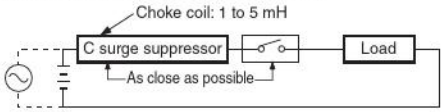

Wiring instructions for the solid state sensor switches

● 2-lead wire

● Basic connection

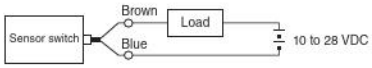

● Connection to relays

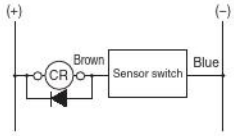

AND (series) connection and OR (parallel) connection

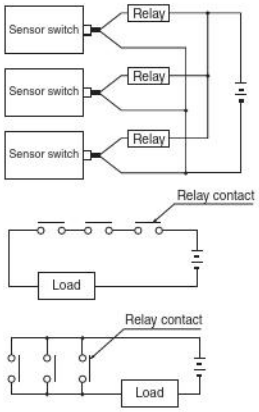

● Connection to solenoid valve

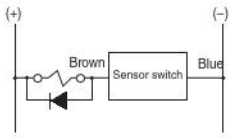

● Connection to programmable controller

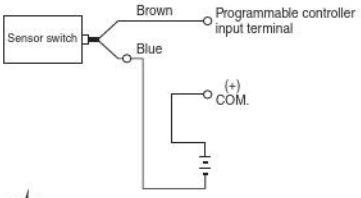

● 3-lead wire with NPN output type

● Basic connection

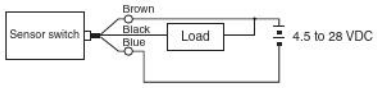

● Connection to relays

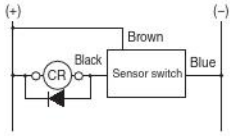

AND (series) connection and OR (parallel) connection

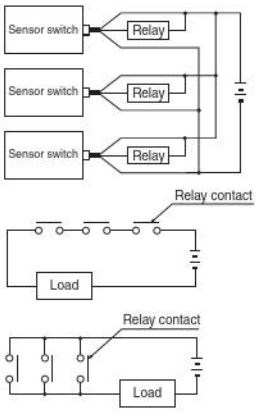

● Connection to solenoid valve

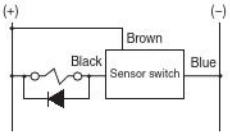

● Connection to programmable controller

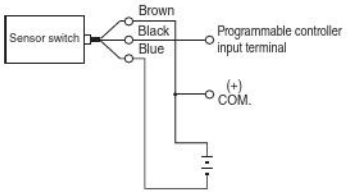

● 3-lead wire with PNP output type

● Basic connection

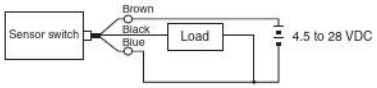

● Connection to relays

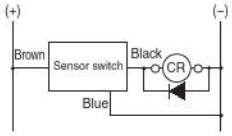

AND (series) connection and OR (parallel) connection

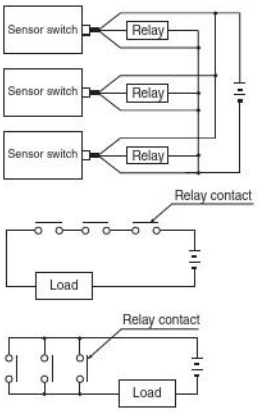

● Connection to solenoid valve

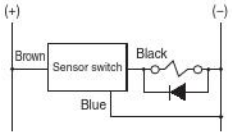

● Connection to programmable controller

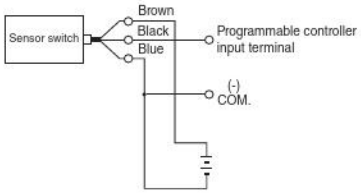

NOTE

1. Connect the lead wires according to their color. Incorrect wiring will cause damage to the sensor switch.
2. The use of a surge protection diode is recommended with the inductive load such as an electromagnetic relay.
3. Avoid the use of AND (series) connections because the circuit voltage will drop in proportion to the number of sensor switches.
4. When using an OR (parallel) connection, it is possible to connect sensor switch outputs directly (ex: using corresponding black lead wires). Be aware of load return errors since current leakage increases with the number of switches.
5. Because the sensor switches are magnetically sensitive, avoid using them in locations subject to strong external magnetic fields or bringing them in close proximity to power lines and areas where large electric currents are present. Also avoid using magnetic material for any parts used for mounting. It could result in erratic operation.
6. Do not excessively pull on or bend the lead wires.
7. Avoid using the switches in environments where chemicals or gas are present.
8. Consult the nearest Koganei sales office for use in environments subject to water or oil.

Moving Sensor Switch

- Loosening the set screw allows the sensor switch to be moved along the switch mounting groove of the cylinder tube.
- The tightening torque for the set screw is 0.1 to 0.2 N·m [0.885 to 1.770 in·lbf].

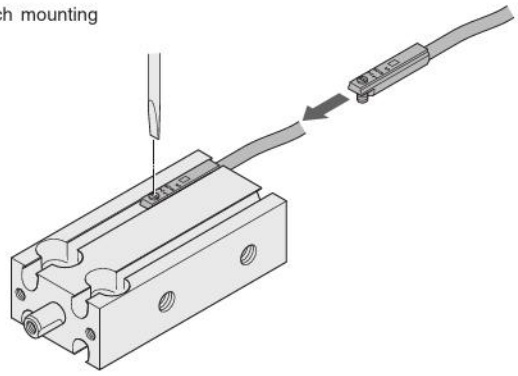

Sensor Switch Operating Range, Response Differential, and Maximum Sensing Location

● Operating range: ℓ

The range from where the piston turns the sensor switch on and the point where the sensor switch is turned off as the piston travels in the same direction.

● Response differential: C

The distance between the point where the piston turns the sensor switch on and the point where the sensor switch is turned off as the piston travels in the opposite direction.

● Solid State Type (Reference Values) mm [in.]

Item \ Diameter	6 [0.236]	8 [0.315]	10 [0.394]	12 [0.472]	16 [0.630]	20 [0.787]	25 [0.984]	32 [1.260]	40 [1.575]	50 [1.969]	63 [2.480]	80 [3.150]	100 [3.937]	125 [4.921]
Operating range Note 1: ℓ	1.5 to 5 [0.059 to 0.197]		2 to 5 [0.079 to 0.197]			2 to 6 [0.079 to 0.236]			3 to 7 [0.118 to 0.276]	3 to 11 [0.118 to 0.433]				
Response differential: C	0.3 [0.012] or less													
Maximum sensing location Note 2	6 [0.236]													

● Reed Switch Type (Reference Values) mm [in.]

Item \ Diameter	16 [0.630]	20 [0.787]	25 [0.984]	32 [1.260]	40 [1.575]	50 [1.969]	63 [2.480]	80 [3.150]	100 [3.937]	125 [4.921]
Operating range Note 1: ℓ	3 to 9 [0.118 to 0.354]	4 to 12 [0.157 to 0.472]			6 to 14 [0.236 to 0.551]	7 to 18 [0.276 to 0.709]			8 to 19 [0.315 to 0.748]	8 to 24 [0.315 to 0.945]
Response differential: C	0.3 [0.012] or less									
Maximum sensing location Note 2	10 [0.394]									

● Two-color LED Solid State Type (Reference Values) mm [in.]

Item \ Diameter	6 [0.236]	8 [0.315]	10 [0.394]	12 [0.472]	16 [0.630]	20 [0.787]	25 [0.984]	32 [1.260]	40 [1.575]	50 [1.969]	63 [2.480]	80 [3.150]	100 [3.937]	125 [4.921]
Operating range Note 1: ℓ	1.5 to 5 [0.059 to 0.197]		2 to 6 [0.079 to 0.236]				3 to 8 [0.118 to 0.315]			4 to 12 [0.157 to 0.472]				5 to 12 [0.197 to 0.472]
Response differential: C	0.5 [0.020] or less													
Maximum sensing location Note 2	6 [0.236]													

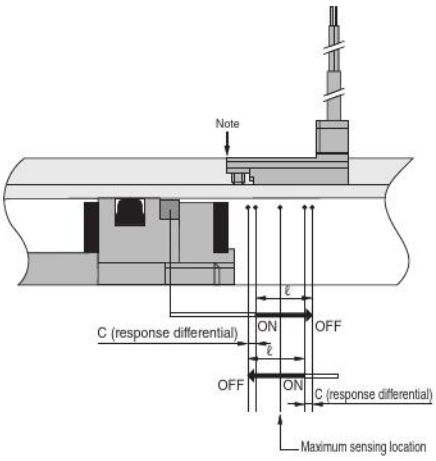

Note 1: When using two sensor switches with a stroke shorter than the operating range in the table above, note that overlap is more likely to occur.

Note 2: The value from the opposite end of the lead wire. (shown by arrow)

When Mounting the Cylinders with Sensor Switches in Close Proximity

When using it connected to a cylinder, use under conditions using values greater than those shown in the table below.

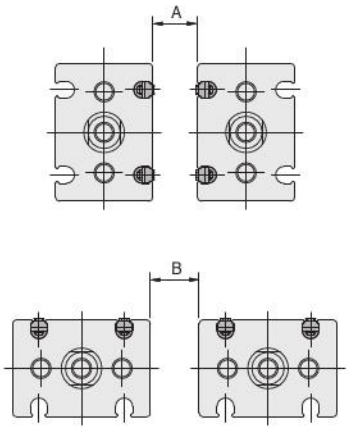

Note: Install a shield plate (at least 1 mm [0.039 in.] thick magnetic material) between two cylinders to use them in close proximity.However, magnetic materials cannot be used in magnetized environments.

● Reed Switch Type mm [in.]

Cylinder bore	A	B
16 [0.630]	12 [0.472]	0
20 [0.787]		
25 [0.984]		
32 [1.260]		
40 [1.575]		
50 [1.969]		
63 [2.480]		
80 [3.150]		
100 [3.937]		
125 [4.921]		

● Solid State Type mm [in.]

Cylinder bore	A	B
6 [0.236]	14 [0.551]	0
8 [0.315]		
10 [0.394]		
12 [0.472]		
16 [0.630]		
20 [0.787]		
25 [0.984]		
32 [1.260]		
40 [1.575]		
50 [1.969]		
63 [2.480]		
80 [3.150]		
100 [3.937]		
125 [4.921]		

● Two-color LED Solid State Type mm [in.]

Cylinder bore	A	B
6 [0.236]	23 [0.906]	0
8 [0.315]		
10 [0.394]		
12 [0.472]		
16 [0.630]		
20 [0.787]		
25 [0.984]		
32 [1.260]		
40 [1.575]		
50 [1.969]		
63 [2.480]		
80 [3.150]		
100 [3.937]		
125 [4.921]		

● For Cylinder with Guide

● Reed Switch Type mm [in.]

Cylinder bore	A	B
16 [0.630]	11 [0.433]	0
20 [0.787]		
25 [0.984]		
32 [1.260]		
40 [1.575]		

● Solid State Type mm [in.]

Cylinder bore	A	B
8 [0.315]	23 [0.906]	0
12 [0.472]		
16 [0.630]		
20 [0.787]		
25 [0.984]		
32 [1.260]		
40 [1.575]		

● Two-color LED Solid State Type mm [in.]

Cylinder bore	A	B
8 [0.315]	15 [0.591]	0
12 [0.472]		
16 [0.630]		
20 [0.787]		
25 [0.984]		
32 [1.260]		
40 [1.575]		

Mounting Position of the End of Stroke Detection Sensor Switch

Mounting the sensor switch in the locations shown (reference values in diagram), the sensor magnet comes to the maximum sensing location of the sensor switch at the end of the stroke.

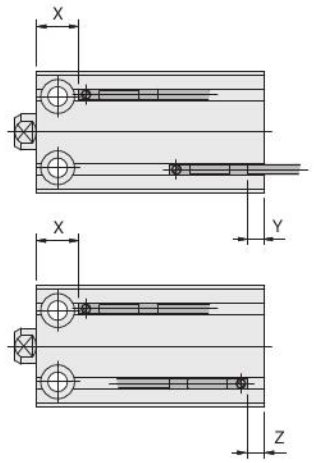

• Scraper specification
• Clean room specification (with dust collection port)

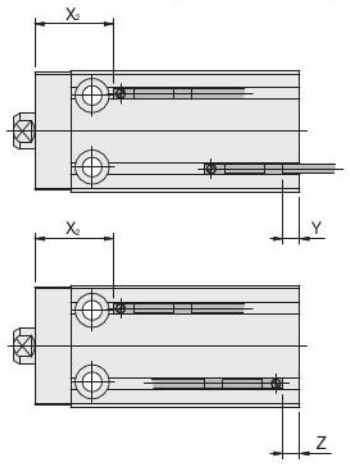

* When the Y dimension is negative, the sensor switch protrudes from the cylinder body.

● Double acting type ● Single acting push type ● Single acting pull type 2*

Solid state type (2-color LED included) mm

Item \ Bore		6	8	10	12	16	20	25	32	40	50	63	80	100	125
Double acting type	X	10.5	11	11	11	12	15 (20)	16 (21)	17.5	22.5	27.5	33.5	34.5	46.5	53
	X_2	–	–	21	21	22	25 (30)	26 (31)	32.5	37.5	42.5	53.5	*54.5	*66.5	*73
	Y	0	-0.5	0.5	1.5	2.5	3.5	4.5	7	9	10	12	14	18	19.5
	Z	3.5	3	4	5	6	7	8	10.5	12.5	13.5	15.5	17.5	21.5	23
Push Single acting type	X	25.5	26	26	26	27	30	31	32.5	37.5	47.5	–	–	–	–
	Y	0	-0.5	0.5	1.5	2.5	3.5	4.5	7	9	10	–	–	–	–
	Z	3.5	3	4	5	6	7	8	10.5	12.5	13.5	–	–	–	–
Pull Single acting type	X	10.5	11	11	11	12	15	16	17.5	22.5	27.5	–	–	–	–
	Y	15	14.5	15.5	16.5	17.5	18.5	19.5	22	24	30	–	–	–	–
	Z	18.5	18	19	20	21	22	23	22.5	27.5	33.5	–	–	–	–

Note: Dimensions in ( ) parentheses are for 5 mm [0.197 in.] stroke models. * Indicates dimensions for scraper specification only.

Reed switch type mm

Item \ Bore		6	8	10	12	16	20	25	32	40	50	63	80	100	125
Double acting type	X	–	–	–	–	8	11 (16)	12 (17)	13.5	18.5	23.5	29.5	30.5	42.5	49
	X_2	–	–	–	–	18	21 (26)	22 (27)	28.5	33.5	38.5	49.5	*50.5	*62.5	*69
	Y	–	–	–	–	-0.5	0.5	1.5	4	6	7	9	11	15	16.5
	Z	–	–	–	–	2	3	4	6.5	8.5	9.5	11.5	13.5	17.5	19
Push Single acting type	X	–	–	–	–	23	26	27	28.5	33.5	43.5	–	–	–	–
	Y	–	–	–	–	-0.5	0.5	1.5	4	6	7	–	–	–	–
	Z	–	–	–	–	2	3	4	6.5	8.5	9.5	–	–	–	–
Pull Single acting type	X	–	–	–	–	8	11	12	13.5	18.5	23.5	–	–	–	–
	Y	–	–	–	–	14.5	15.5	16.5	19	21	27	–	–	–	–
	Z	–	–	–	–	17	18	19	21.5	23.5	29.5	–	–	–	–

Note: Dimensions in ( ) parentheses are for 5 mm [0.197 in.] stroke models. * Indicates dimensions for scraper specification only.

● Double acting double rod end type

Solid state type (2-color LED included) mm

Item \ Bore		6	8	10	12	16	20	25	32	40	50	63	80	100	125
Double acting type	X	10.5	11	11	11	12	15	16	17.5	22.5	27.5	33.5	34.5	46.5	53
	Y	4	4.5	5.5	6.5	7.5	8.5	9.5	12	14	20	22	24	18	19.5
	Z	7.5	8	9	10	11	12	13	15.5	17.5	23.5	25.5	27.5	21.5	23

Reed switch type mm

Item \ Bore		6	8	10	12	16	20	25	32	40	50	63	80	100	125
Double acting type	X	–	–	–	–	8	11	12	13.5	18.5	23.5	29.5	30.5	42.5	49
	Y	–	–	–	–	4.5	5.5	6.5	9	11	17	19	21	15	16.5
	Z	–	–	–	–	7	8	9	11.5	13.5	19.5	21.5	23.5	17.5	19

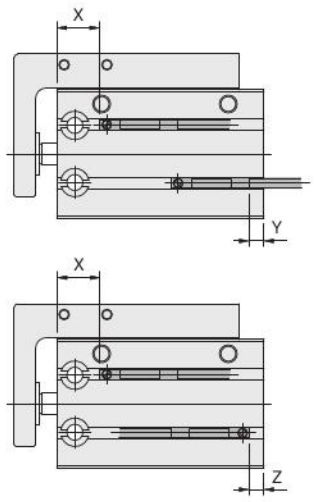

* When the Y dimension is negative, the sensor switch protrudes from the cylinder body.

● Double acting type with guide

Solid state type mm

Item \ Bore		8	12	16	20	25	32	40
Double acting type	X	11 (16)	11 (16)	12 (17)	15 (20)	16 (21)	17.5 (22.5)	22.5 (27.5) (32.5 for stroke 10 only)
	Y	-0.5	1.5	2.5	3.5	4.5	12	14
	Z	3	5	6	7	8	15.5	17.5

Note: Dimensions in ( ) parentheses are for mid-stroke models (stroke 5, 15, 25, 35, 45, and 55).

Reed switch type mm

Item \ Bore		8	12	16	20	25	32	40
Double acting type	X	–	–	8 (13)	11 (16)	12 (17)	13.5 (18.5)	18.5 (23.5) (28.5 for stroke 10 only)
	Y	–	–	-0.5	0.5	1.5	9	11
	Z	–	–	2	3	4	11.5	13.5

Note: Dimensions in ( ) parentheses are for mid-stroke models (stroke 5, 15, 25, 35, 45, and 55).

Mounting Position of the End of Stroke Detection Sensor Switch

Mounting the sensor switch in the locations shown (reference values in diagram), the sensor magnet comes to the maximum sensing location of the sensor switch at the end of the stroke.

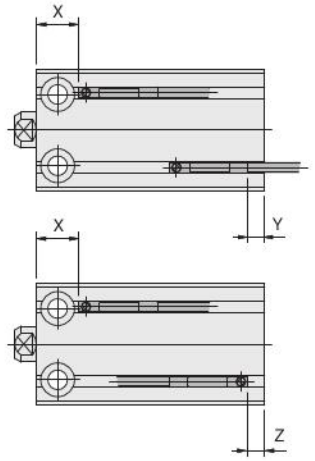

• Scraper specification
• Clean room specification (with dust collection port)

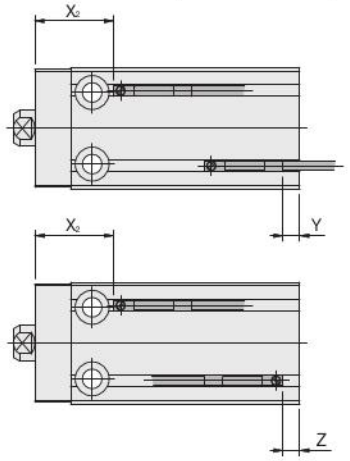

* When the Y dimension is negative, the sensor switch protrudes from the cylinder body.

● Double acting type ● Single acting push type ● Single acting pull type 2*

Solid state type (2-color LED included) in.

Item \ Bore		0.236	0.315	0.394	0.472	0.630	0.787	0.984	1.260	1.575	1.969	2.480	3.150	3.937	4.921
Double acting type	X	0.413	0.433	0.433	0.433	0.472	0.591 (0.787)	0.630 (0.827)	0.689	0.886	1.083	1.319	1.358	1.831	2.087
	X_2	–	–	0.827	0.827	0.866	0.984 (1.181)	1.024 (1.220)	1.280	1.476	1.673	2.106	*2.146	*2.618	*2.874
	Y	0.000	-0.020	0.020	0.059	0.098	0.138	0.177	0.276	0.354	0.394	0.472	0.551	0.709	0.768
	Z	0.138	0.118	0.157	0.197	0.236	0.276	0.315	0.413	0.492	0.531	0.610	0.689	0.846	0.906
Push Single acting type	X	1.004	1.024	1.024	1.024	1.063	1.181	1.220	1.280	1.476	1.870	–	–	–	–
	Y	0.000	-0.020	0.020	0.059	0.098	0.138	0.177	0.276	0.354	0.394	–	–	–	–
	Z	0.138	0.118	0.157	0.197	0.236	0.276	0.315	0.413	0.492	0.531	–	–	–	–
Pull Single acting type	X	0.413	0.433	0.433	0.433	0.472	0.591	0.630	0.689	0.886	1.083	–	–	–	–
	Y	0.591	0.571	0.610	0.650	0.689	0.728	0.768	0.866	0.945	1.181	–	–	–	–
	Z	0.728	0.709	0.748	0.787	0.827	0.866	0.906	0.886	1.083	1.319	–	–	–	–

Note: Dimensions in ( ) parentheses are for 5 mm [0.197 in.] stroke models. * Indicates dimensions for scraper specification only.

Reed switch type in.

Item \ Bore		0.236	0.315	0.394	0.472	0.630	0.787	0.984	1.260	1.575	1.969	2.480	3.150	3.937	4.921
Double acting type	X	–	–	–	–	0.315	0.433 (0.630)	0.472 (0.669)	0.531	0.728	0.925	1.161	1.201	1.673	1.929
	X_2	–	–	–	–	0.709	0.827 (1.024)	0.866 (1.063)	1.122	1.319	1.516	1.949	*0.078	*0.097	*2.717
	Y	–	–	–	–	-0.020	0.020	0.059	0.157	0.236	0.276	0.354	0.433	0.591	0.650
	Z	–	–	–	–	0.079	0.118	0.157	0.256	0.335	0.374	0.453	0.531	0.689	0.748
Push Single acting type	X	–	–	–	–	0.906	1.024	1.063	1.122	1.319	1.713	–	–	–	–
	Y	–	–	–	–	-0.020	0.020	0.059	0.157	0.236	0.276	–	–	–	–
	Z	–	–	–	–	0.079	0.118	0.157	0.256	0.335	0.374	–	–	–	–
Pull Single acting type	X	–	–	–	–	0.315	0.433	0.472	0.531	0.728	0.925	–	–	–	–
	Y	–	–	–	–	0.571	0.610	0.650	0.748	0.827	1.063	–	–	–	–
	Z	–	–	–	–	0.669	0.709	0.748	0.846	0.925	1.161	–	–	–	–

Note: Dimensions in ( ) parentheses are for 5 mm [0.197 in.] stroke models. * Indicates dimensions for scraper specification only.

● Double acting double rod end type

Solid state type (2-color LED included) in.

Item \ Bore		0.236	0.315	0.394	0.472	0.630	0.787	0.984	1.260	1.575	1.969	2.480	3.150	3.937	4.921
Double acting type	X	0.413	0.433	0.433	0.433	0.472	0.591	0.630	0.689	0.886	1.083	1.319	1.358	1.831	2.087
	Y	0.157	0.177	0.217	0.256	0.295	0.335	0.374	0.472	0.551	0.787	0.866	0.945	0.709	0.768
	Z	0.295	0.315	0.354	0.394	0.433	0.472	0.512	0.610	0.689	0.925	1.004	1.083	0.846	0.906

Reed switch type in.

Item \ Bore		0.236	0.315	0.394	0.472	0.630	0.787	0.984	1.260	1.575	1.969	2.480	3.150	3.937	4.921
Double acting type	X	–	–	–	–	0.315	0.433	0.472	0.531	0.728	0.925	1.161	1.201	1.673	1.929
	Y	–	–	–	–	0.177	0.217	0.256	0.354	0.433	0.669	0.748	0.827	0.591	0.650
	Z	–	–	–	–	0.276	0.315	0.354	0.453	0.531	0.768	0.846	0.925	0.689	0.748

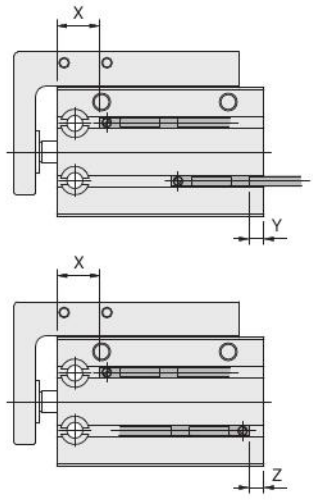

* When the Y dimension is negative, the sensor switch protrudes from the cylinder body.

● Double acting type with guide

Solid state type in.

Item \ Bore		0.315	0.472	0.630	0.787	0.984	1.260	1.575
Double acting type	X	0.433 (0.630)	0.433 (0.630)	0.472 (0.669)	0.591 (0.787)	0.630 (0.827)	0.689 (0.886)	0.886 (1.083) (1.280 for stroke 10 only)
	Y	-0.020	0.059	0.098	0.138	0.177	0.472	0.551
	Z	0.118	0.197	0.236	0.276	0.315	0.610	0.689

Note: Dimensions in ( ) parentheses are for mid-stroke models (stroke 5, 15, 25, 35, 45, and 55).

Reed switch type in.

Item \ Bore		0.315	0.472	0.630	0.787	0.984	1.260	1.575
Double acting type	X	–	–	0.315 (0.512)	0.433 (0.630)	0.472 (0.669)	0.531 (0.728)	0.728 (0.925) (1.122 for stroke 10 only)
	Y	–	–	-0.020	0.020	0.059	0.354	0.433
	Z	–	–	0.079	0.118	0.157	0.453	0.531

Note: Dimensions in ( ) parentheses are for mid-stroke models (stroke 5, 15, 25, 35, 45, and 55).

MEMO

MEMO

MEMO

MEMO

Limited Warranty

KOGANEI CORP. warrants its products to be free from defects in material and workmanship subject to the following provisions.

Warranty Period The warranty period is 180 days from the date of delivery.

Koganei Responsibility If a defect in material or workmanship is found during the warranty period, KOGANEI CORP. will replace any part proved defective under normal use free of charge and will provide the service necessary to replace such a part.

Limitations

- This warranty is in lieu of all other warranties, expressed or implied, and is limited to the original cost of the product and shall not include any transportation fee, the cost of installation or any liability for direct, indirect or consequential damage or delay resulting from the defects.
- KOGANEI CORP. shall in no way be liable or responsible for injuries or damage to persons or property arising out of the use or operation of the manufacturer's product.
- This warranty shall be void if the engineered safety devices are removed, made inoperative or not periodically checked for proper functioning.
- Any operation beyond the rated capacity, any improper use or application, or any improper installation of the product, or any substitution upon it with parts not furnished or approved by KOGANEI CORP., shall void this warranty.
- This warranty covers only such items supplied by KOGANEI CORP. The products of other manufacturers are covered only by such warranties made by those original manufacturers, even though such items may have been included as the components.

The specifications are subject to change without notice.

URL http://www.koganei.co.jp

E-mail: overseas@koganei.co.jp

KOGANEI

KOGANEI CORPORATION

OVERSEAS DEPARTMENT
3-11-28, Midori-cho, Koganei City, Tokyo 184-8533, Japan
Tel: (+81)42-383-7271 Fax: (+81)42-383-7276

KOGANEI INTERNATIONAL AMERICA.INC.
48860 Milmont Drive, suite 108C, Fremont, California 94538
Tel : 1-510-744-1626 Fax : 1-510-744-1676

SHANGHAI KOGANEI INTERNATIONAL TRADING CORPORATION
RM2601-2602, Tongda Venture Building No.1, Lane 600, Tianshan Road,
Shanghai, China (200051)
Tel: 86-21-6145-7313 Fax: 86-21-6145-7323

TAIWAN KOGANEI TRADING CO.,LTD
Rm. 2, 16F., No88, Sec. 2, Zhongxiao E. Rd., Zhongzheng Dist., Taipei City 100,
Taiwan(ROC)
Tel: 886-2-2393-2717 Fax: 886-2-2393-2719

KOGANEI KOREA CO.,LTD
A-3001, Heungdeok IT Valley Bldg., Heungkeok 1-ro, 13, Giheung-gu, Yongin-si, Gyeonggi-do,
446-908, KOREA
Tel: 82-31-246-0414 Fax: 82-31-246-0415

KOGANEI (THAILAND) CO.,LTD
555, Rasa Tower 1, 11th Fl.,Unit 1107 and 1108, Phaholyothin Road, Chatuchak,
Chatuchak, Bangkok 10900
Tel: +66 (0) 2513-1228-31 Fax: +66 (0) 2513-1232

KOGANEI AUTOMATION (MALAYSIA) SDN, BHD.
Suite 29-2, Level 29, Menara 1MK, No.1, Jalan Kiara, Mont Kiara
50480, Kuala Lumpur, Malaysia
Tel: 60-12-537-7086

KOGANEI ASIA PTE. LTD.
69 Ubi Road 1, #05-18 Oxley Bizhub Singapore 408731
Tel: 65-6293-4512 Fax: 65-6293-4513

4/'25 AB

©KOGANEI CORP. PRINTED IN JAPAN