CAD drawing data catalog is available.

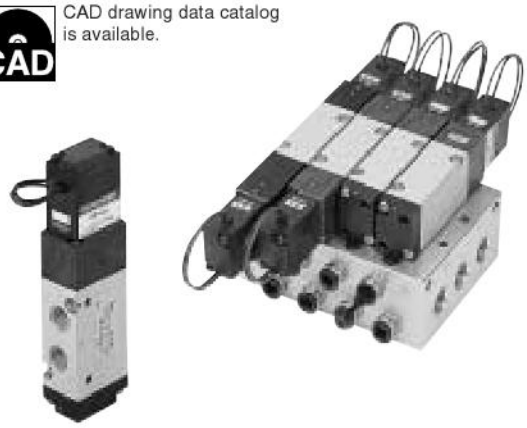

KOGANEI

VALVES GENERAL CATALOG

SOLENOID VALVES 180 SERIES

INDEX

Features — 331
Basic Models and Configuration — 333
Specifications — 335
Cylinder Operating Speed, Flow Rate — 337
Tandem Solenoid Valve Order Codes — 338
Solenoid Valve, Air-piloted Valve Order Codes — 339
Manifold Order Codes — 340
Operating Principles and Symbols, Major Parts and Materials — 341
Dimensions of Solenoid Valve — 342
Dimensions of Manifold — 347
Made to Order — 353
- Plug Connector
- DIN Connector
- LED Indicator
- Built-in Interface Unit
- Sub-base Regulator
- Air-piloted Valves 180 Series

Handling Instructions and Precautions — 361

⚠ **Caution** **Before use, be sure to read the "Safety Precautions" on p. 31.**

Reliability & Versatile Application

SOLENOID VALVES 180 SERIES

The 180 series Solenoid Valves, which achieve highly reliable, powerful, and low current basic performance in a compact, thin body, offer a simple and flexible standard type, and a full-option type with advanced maintenance features, to become still more user-friendly.

Standard type

Its clean lines emphasize basic performance, for low-cost and versatile applications.

- With a varistor for the AC type, and a flywheel diode for the DC type, the solenoid is equipped with excellent surge suppression measures.

- A manual override (non-locking type) is standard equipment and offers easy adjustment during assembly and maintenance. A fingertip-operable protruding-type manual override (locking type) is also available as an option.

- Equipped with an easy-to-handle plug connector for fast wiring installation and removal. Available in a straight type and L type, both are equipped with LED indicators for easy confirmation of operations.
- Built-in quick fittings offer one-touch simple tube installation and removal. Moreover, an effective area of 9.6mm^2 (Cv: 0.53), ensures even more powerful applications.

Full-option type

Greatly improves piping and wiring work efficiency, for excellent applications in assembly, adjustment, and maintenance.

F type manifold

Direct piping type valves can be mounted directly on this manifold. An FE type manifold enabling collected pilot exhaust through its PR port is also available.

- The common terminal pre-wired plug connector type frees technicians from tedious common terminal wiring work. Crossover wires are used to connect the common terminals, so that a single common wire is sufficient even for a manifold with many stations.

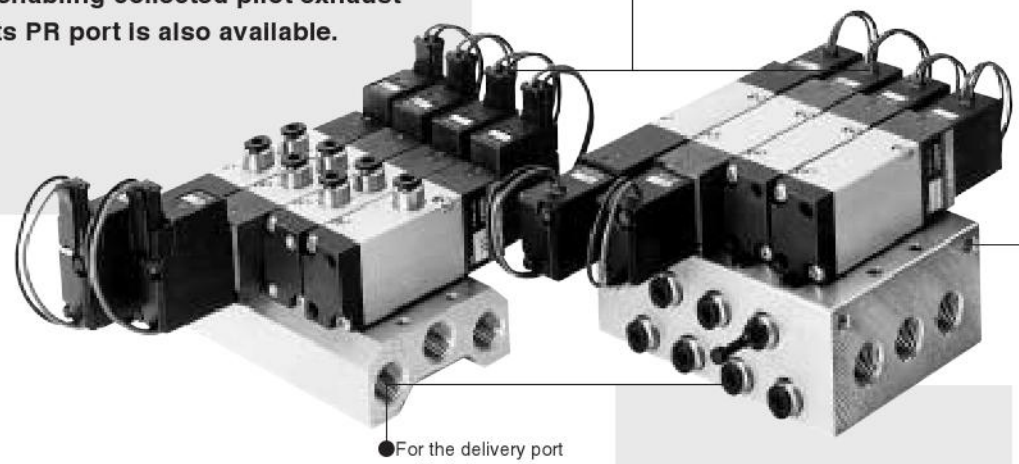

- For the delivery port quick fittings, select from ϕ4 or ϕ6 fittings for each station in accordance with actuator size.
- Piping to the pilot exhaust ports is also possible to keep the control box interior and working environment from becoming contaminated. The built-in check mechanism prevents exhaust interference.

AJ type manifold

Combines all ports into a manifold base. Quick fittings are built into the delivery ports (4(A), 2(B)), allowing easy assembly and maintenance in a confined space.

Twin Solenoid Valve

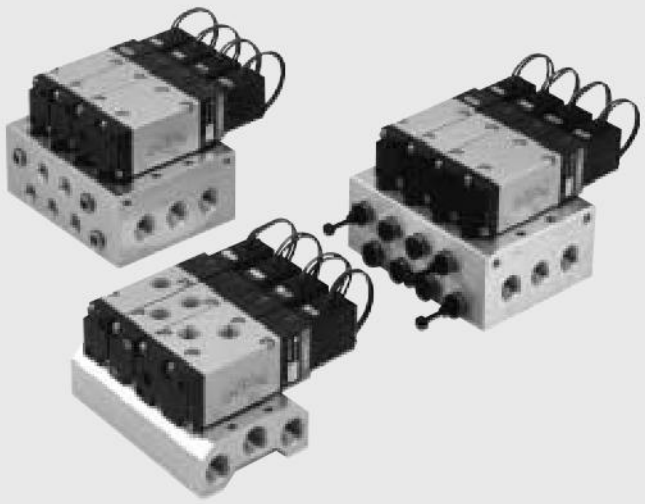

Ensures the functions of the conventional double solenoid type, but in a much shorter length, while simple wiring enables correct connections with a sequencer. Moreover, it is capable of being installed on a conventional manifold to occupy space for two stations.

Tandem Solenoid Valve

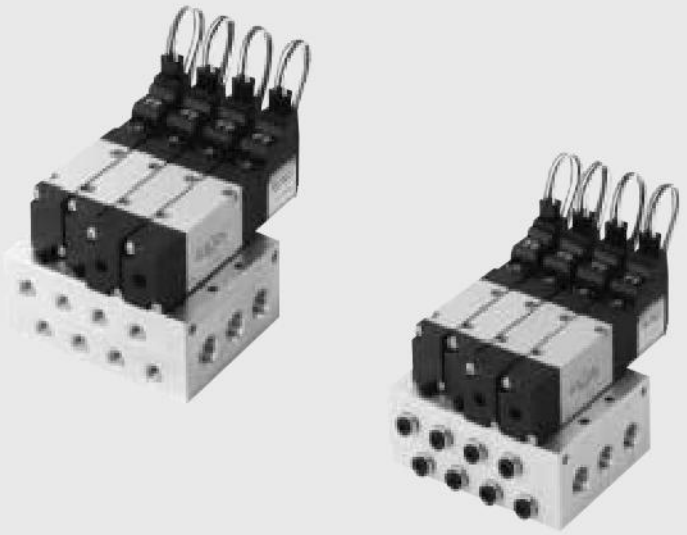

Retains the performance specifications of the 180 series while realizing a two-unit combination solenoid in the space of a single station. Achieves a compact outer appearance for the manifold and still more space savings.

Single unit

	2-, 3-port	5-port				
Direct piping	Normally closed (NC) / Normally open (NO)	2-position		3-position		
		Single solenoid	Double solenoid	Closed center	Exhaust center	Pressure center
	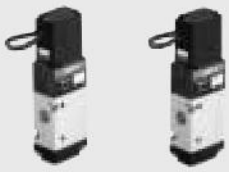					
	181E1 (□**180E1**)[Note 1] **181E1-11** (□**180E1-11**)[Note 1]	**180-4E1**	**180-4E2** (□**180-4KE2**)[Note 2]	**183-4E2** (□**183-4KE2**)[Note 2]	**183-4E2-13** (□**183-4KE2-13**)[Note 2]	**183-4E2-14** (□**183-4KE2-14**)[Note 2]
Sub-base piping	Normally closed (NC) / Normally open (NO)	2-position		3-position		
		Single solenoid	Double solenoid	Closed center	Exhaust center	Pressure center
				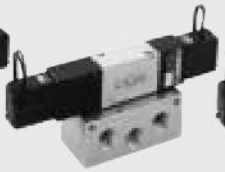	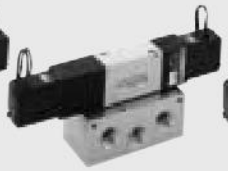	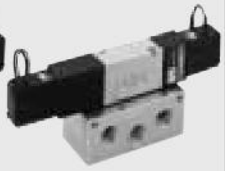
	A181E1-25 **A181E1-11-25**	**A180-4E1-25**	**A180-4E2-25**	**A183-4E2-25**	**A183-4E2-13-25**	**A183-4E2-14-25**
		2-position (tandem solenoid)		3-position (tandem solenoid)		
			Double solenoid	Closed center	Exhaust center	Pressure center
			A180-4ME2	**A183-4ME2**	**A183-4ME2-13**	**A183-4ME2-14**

Notes: 1. 180E1 and A180E1 are dedicated valves for manifolds with combination mounting of 2-, 3-, 5-port valves. They cannot be used as single units. When using 2-, 3-port valves as single units, use 181E1 or A181E1-25.
2. They are dedicated twin solenoid valves for manifolds with combination mounting of 2-, 3-, 5-port valves. They cannot be used as single units.

Manifold

Small sized manifold for 2-, 3-port valves

181M□F—F type (1(P), 3(R)) manifold

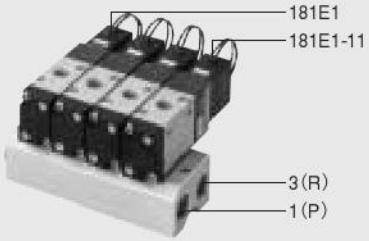

181M□A—A type (all ports) manifold

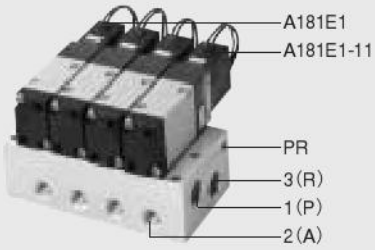

181M□AJ—AJ type (all ports, with quick fittings) manifold

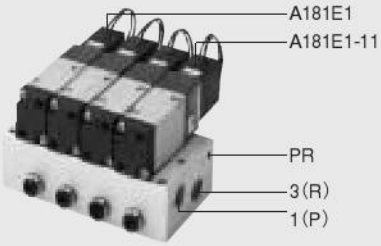

Manifold for combination mounting of 2-, 3-, 5-port valves

180M□F—F type (1(P), 3(R2), 5(R1)) manifold

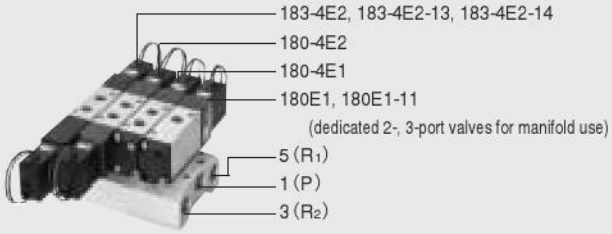

180M□FE—FE type (1(P), 3(R2), 5(R1), PR) manifold

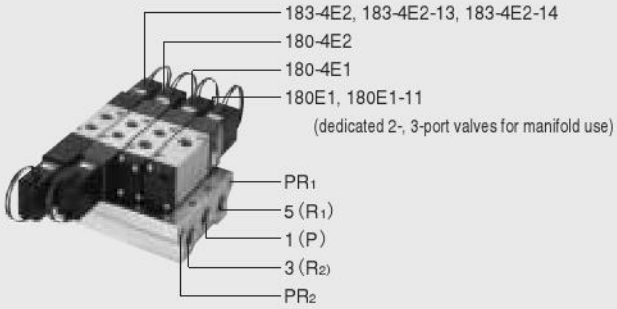

180M□A—A type (all ports) manifold

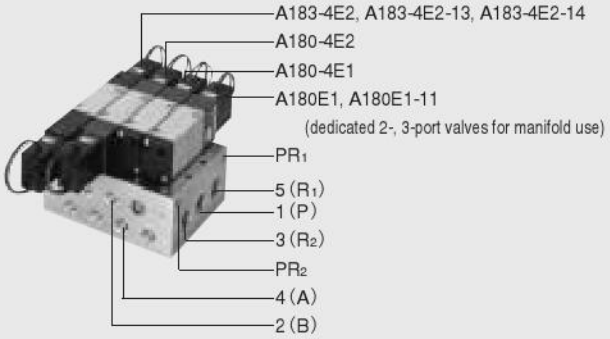

180M□AJ—AJ type (all ports, with quick fittings) manifold

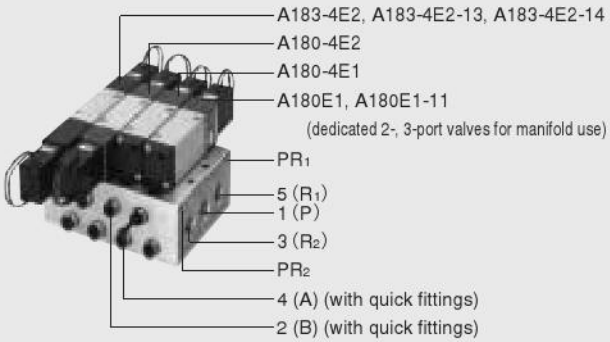

Basic Models and Valve Functions

Basic model / Item						
Direct piping, F, FE type manifolds	181E1 (180E1[Note])	180-4E1 180-4E2	180-4KE2[Note]	183-4E2	183-4KE2
Sub-base piping, A, AJ type manifolds	A181E1 (A180E1[Note])	A180-4E1 A180-4E2 A180-4ME2	A180-4KE2[Note]	A183-4E2 A183-4ME2	A183-4KE2
Number of positions	2 positions			3 positions	
Number of ports	2, 3 ports	5 ports			
Valve function	Normally closed (NC, standard) or Normally open (NO, optional)	Single solenoid, Double solenoid or Tandem solenoid	Twin solenoid	Closed center (standard), Exhaust center (optional), Pressure center (optional) or Tandem solenoid	Closed center (standard), Exhaust center (optional), Pressure center (optional) or Twin solenoid

Remark: For optional specifications and order codes, see p.338～340.

Note: 180E1, A180E1, 180-4KE2, and A180-4KE2 are dedicated valves for manifolds with combination mounting of 2-, 3-, 5-port valves. They cannot be used as single units. When using 2-,3-port valves as single units, use 181E1 or A181E1-25.

Specifications

Basic model / Item								
Direct piping, F, FE type manifolds		181E1 (180E1)	180-4E1 180-4E2	180-4KE2	——	183-4E2	183-4KE2	——
Sub-base piping, A, AJ type manifolds		A181E1 (A180E1)	A180-4E1 A180-4E2	A180-4KE2	A180-4ME2	A183-4E2	A183-4KE2	A183-4ME2
Media		Air						
Operation type		Internal pilot type						
Effective area [Cv][Note 1] mm²		10.2 [0.57]			8.2 [0.46]	9.0 [0.50]		8.2 [0.46]
Port size [Note 2]		Rc1/8						
Lubrication		Not required						
Operating pressure range MPa {kgf/cm²} [psi.]		0.15～0.7 {1.5～7.1} [22～102]						
Proof pressure MPa {kgf/cm²} [psi.]		1.05 {10.7} [152]						
Response time [Note 3] ON/OFF ms	DC12V, DC24V	15/25 or below	15/25 [20] or below		20 or below	15/35 or below		15/40 or below
	AC100V, AC200V	15/15 or below	15/15 [15] or below		——	15/20 or below		——
Maximum operating frequency Hz		5						
Minimum time to energize for self holding ms		——	50 (□180-4E2)	50		——		
Operating temperature range (atmosphere and media) °C [°F]		5～50 [41～122]						
Shock resistance m/s² {G}		1373.0 {140.0} (Axial direction 294.2 {30.0})				294.2 {30.0}		
Mounting direction		Any						

Notes: 1. For details, see the effective area on p.336.
2. For details, see the port size on p.336.
3. Values when air pressure is 0.5MPa {5.1kgf/cm²} [73psi.]. Values in brackets [ ] for 180-4E2, 183-4KE2, and for A180-4ME2 are when switching from the opposite position, while the values for 183-4E2,183-4KE2, and A183-4ME2 are those of the closed center valve, when switching from the neutral position.

Solenoid Specifications

Item / Rated voltage		DC12V	DC24V	AC100V		AC200V		DC24V (Tandem solenoid)
Type		Flywheel diode incorporated for surge suppression		Shading type				Built-in surge absorption transistor
Operating voltage range V		10.8～13.2 (12±10%)	21.6～26.4 (24±10%)	90～132 (100 $^{+32}_{-10}$%)		180～264 (200 $^{+32}_{-10}$%)		21.6～26.4 (24±10%)
Current (when rated voltage is applied)	Frequency Hz	——	——	50	60	50	60	——
	Starting mA (r.m.s)	——	——	36	32	18	16	——
	Energizing mA (r.m.s)	130 (1.6W) [140 (1.7W) with LED indicator]	65 (1.6W) [75 (1.8W) with LED indicator]	24	20	12	10	50 (1.2W)
Allowable leakage current mA		8	4	4		2		2
Insulation resistance MΩ		Over 100						
Wiring type and lead wire length	Standard	Grommet type: 300mm [11.8in.]						Plug connector type: 300mm [11.8in.]
	Optional	Plug connector type: 300mm [11.8in.] Note: See made to order on p.353～354.						——
Color of lead wire		Brown (+) Black (−)	Red (+) Black (−)	Yellow		White		Red (SA), Black (COM) White (SB)
Color of LED indicator		Red		Yellow		Green		Red
Surge suppression (as standard)		Flywheel diode		Varistor				Surge absorption transistor

Effective Area〔Cv〕

mm²〔Cv〕

Basic model	Standard (Single valve)	Built-in quick fittings	Remarks
181E1[Note] **(180E1) 180-4E1 180-4E2 180-4KE2**	10.2 〔0.57〕	-J4□: 4.4 〔0.24〕 -J6□: 9.6 〔0.53〕	● When attaching TS6-01 to the 1(P), 4(A), 2(B) ports, the value is 9.2 〔0.51〕. ● On the F type manifold, attaching TS4-01 to the 4(A), 2(B) ports gives the value 4.1 〔0.23〕, and attaching TS6-01 gives the value 9.2 〔0.51〕. ● When large flow rates are required, we recommend the φ6 built-in quick fitting type.
183-4E2 183-4KE2	9.0 〔0.50〕	-J4□: 4.4 〔0.24〕 -J6□: 8.5 〔0.47〕	
A181E1[Note] **(A180E1) A180-4E1 A180-4E2 A180-4KE2 A183-4E2 A183-4KE2 A180-4ME2 A183-4ME2**	8.2 〔0.46〕	-J4□: 4.4 〔0.24〕 -J6□: 7.9 〔0.44〕	● When mounting on a sub-base or manifold. ● Attaching TS6-02 to the 1(P), 4(A), 2(B) ports on the sub-base gives the value 7.5 〔0.42〕.

Note: The delivery port is the 2(A) for 180E1, A181E1.

Solenoid Valve Port Size

Basic model	Port specification		Port size
181E1[Note1] **(180E1**[Note2]**)**	Standard	Female thread	Rc1/8
	Optional	-J41	Quick fitting for φ4, for 2(A) (4(A)) port only
		-J42	Quick fitting for φ4, for 1(P), 2(A) ports
		-J61	Quick fitting for φ6, for 2(A) (4(A)) port only
		-J62	Quick fitting for φ6, for 1(P), 2(A) ports
180-4E1 180-4E2 180-4KE2 183-4E2 183-4KE2	Standard	Female thread	Rc1/8
	Optional	-J42	Quick fitting for φ4, for 4(A), 2(B) ports only
		-J43	Quick fitting for φ4, for 1(P), 4(A), 2(B) ports
		-J62	Quick fitting for φ6, for 4(A), 2(B) ports only
		-J63	Quick fitting for φ6, for 1(P), 4(A), 2(B) ports
A181E1-25[Note1] **A180-4E1-25 A180-4E2-25 A183-4E2-25 A180-4ME2-25 A183-4ME2-25**	1(P)	Female thread	Rc1/4
	4(A), 2(B)		
	3(R2), 5(R1)		
	PR	Female thread	M5×0.8

Notes: 1. The delivery port is the 2(A) for 180E1, A181E1-25.
2. Since 180E1 is for manifold use only, piping to the 1(P) port with a fitting is not possible.

Manifold Connection Port Size

Manifold model	Port	Location of piping ports	Port size
181M□F[Note1] **180M□F**	1(P)	Manifold	Rc1/4
	4(A), 2(B)	Valve	Rc1/8[Note2]
	3(R2), 5(R1)	Manifold	Rc1/4
180M□FE	1(P)	Manifold	Rc1/4
	4(A), 2(B)	Valve	Rc1/8
	3(R2), 5(R1)	Manifold	Rc1/4
	PR		M5×0.8
181M□A[Note1] **180M□A**	1(P)	Manifold	Rc1/4
	4(A), 2(B)		Rc1/8
	3(R2), 5(R1)		Rc1/4
	PR		M5×0.8
181M□AJ[Note1] **180M□AJ**	1(P)	Manifold	Rc1/4
	4(A), 2(B)		Quick fitting for φ4 or φ6
	3(R2), 5(R1)		Rc1/4
	PR		M5×0.8

Notes: 1. The delivery port is the 2(A) for 181M□F,181M□A,181M□AJ.
2. When the mounting valve is a female thread specification, the ports are this size. For the built-in quick fitting types, quick fittings for φ4 or φ6 are installed.

Solenoid Valve Mass

g [oz.]

Basic model	Mass
181E1	95 [3.35]
(180E1)	105 [3.70]
180-4E1	105 [3.70]
180-4E2	155 [5.47]
180-4KE2	255 [8.99]
183-4E2	190 [6.70]
183-4KE2	240 [8.47]
A181E1	105 [3.70] (250 [8.82])
(180E1)	115 [4.06]
A180-4E1	115 [4.06] (275 [9.70])
A180-4E2	165 [5.82] (325 [11.46])
A180-4KE2	260 [9.17]
A180-4ME2	135 [4.76] (295 [10.41])
A183-4E2	200 [7.05] (360 [12.70])
A183-4KE2	245 [8.64]
A183-4ME2	150 [5.29] (310 [10.93])

Remark: Figures in parentheses ( ) are the mass with sub-base:-25.

Manifold Mass

g [oz.]

Manifold model	Mass calculation of each unit (n=number of units)		Block-off plate
181M□F	(32×n)+30	[(1.13×n)+1.06]	14 [0.49]
181M□A	(72×n)+72	[(2.54×n)+2.54]	22 [0.78]
181M□AJ	-J4 : (80×n)+72	[(2.82×n)+2.54]	
	-J6 : (78×n)+72	[(2.75×n)+2.54]	
180M□F	(42×n)+40	[(1.48×n)+1.41]	19 [0.67]
180M□FE	(60×n)+70	[(2.12×n)+2.47]	30 [1.06]
180M□A	(120×n)+120	[(4.23×n)+4.23]	
180M□AJ	-J4 : (135×n)+120	[(4.76×n)+4.23]	
	-J6 : (138×n)+120	[(4.87×n)+4.23]	

■Cylinder operating speed

How to obtain cylinder speed

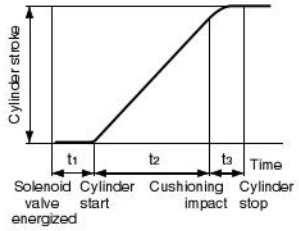

To obtain the time required for the cylinder to complete 1 stroke, add cylinder's delay time t_1 (time between energizing of the solenoid valve and actual starting of the cylinder), to the cylinder's max. speed operating time t_2.
When a cushion is used, add the cushioning time t_3, to the above calculation. The standard cushioning time t_3 is approximately 0.2 seconds.

180-4E1
183-4E2

●Measurement conditions

●Air pressure: 0.5MPa {5.1kgf/cm²} [73psi.]
●Piping inner diameter and length: ϕ 6×1000mm [39in.]
●Fitting: Quick fitting TS8-01
●Load ratio= $\frac{\text{Load}}{\text{Cylinder theoretical thrust}}$ (%)
●Cylinder stroke: 150mm [5.91in.]

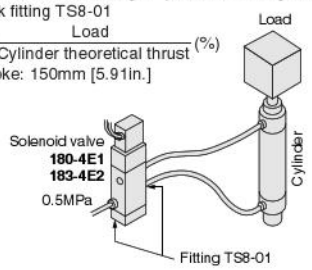

Maximum operating speed

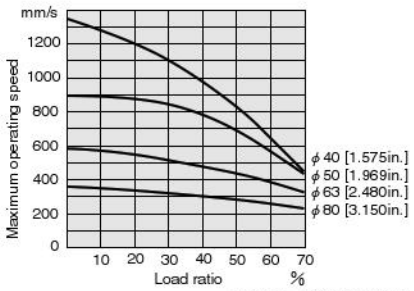

1mm/s = 0.0394in./sec.

Delay time

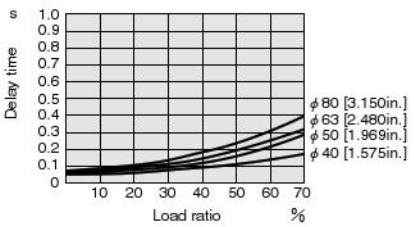

A180-4E1-25
A183-4E2-25

●Measurement conditions

●Air pressure: 0.5MPa {5.1kgf/cm²} [73psi.]
●Piping inner diameter and length: ϕ 6×1000mm [39in.]
●Fitting: Quick fitting TS8-02
●Load ratio= $\frac{\text{Load}}{\text{Cylinder theoretical thrust}}$ (%)
●Cylinder stroke: 150mm [5.91in.]

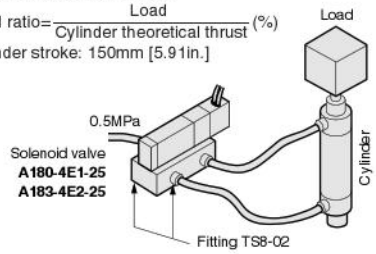

Maximum operating speed

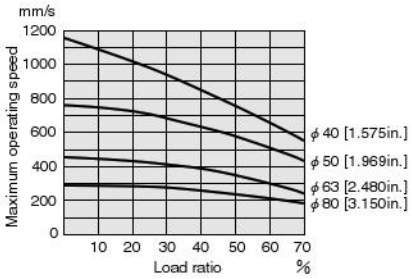

1mm/s = 0.0394in./sec.

Delay time

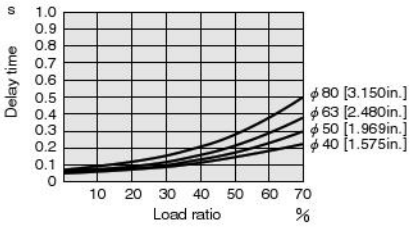

A180-4ME2
A183-4ME2

●Measurement conditions

●Air pressure: 0.5MPa {5.1kgf/cm²} [73psi.]
●Piping inner diameter and length: ϕ 6×1000mm [39in.]
●Fitting: Quick fitting TS6-02
●Load ratio= $\frac{\text{Load}}{\text{Cylinder theoretical thrust}}$ (%)
●Cylinder stroke: 300mm [11.82in.]

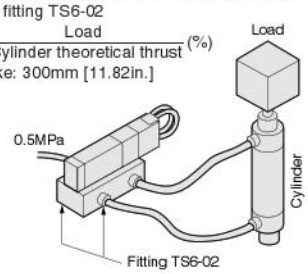

Maximum operating speed

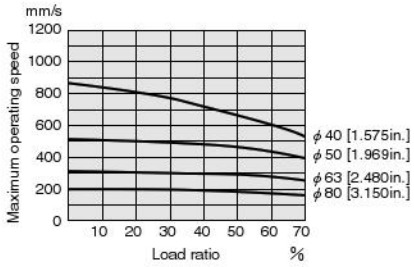

1mm/s = 0.0394in./sec.

Delay time

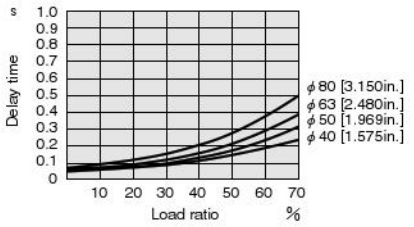

■Flow Rate

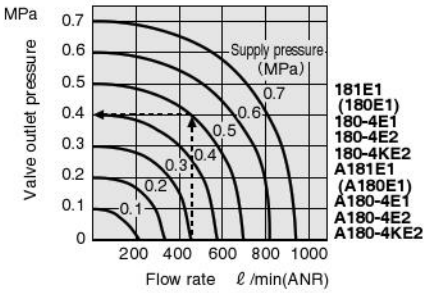

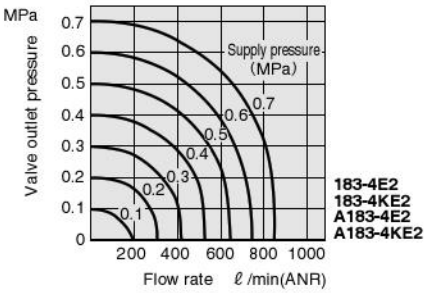

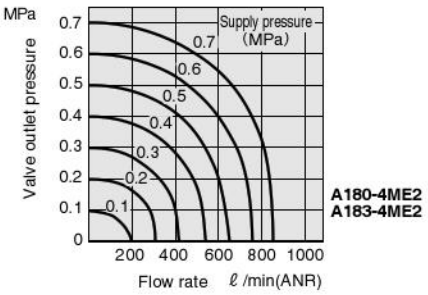

1MPa = 145psi., 1 ℓ/min = 0.0353ft³/min.]

How to read the graph

When the supply pressure is 0.5MPa [73psi.] and the flow rate is 460 ℓ/min [16.2ft³/min.] (ANR), the valve outlet pressure becomes 0.4MPa [58psi.].

180 Series Tandem Solenoid Valve Order Codes

※Single solenoid, double solenoid, twin solenoid, and tandem solenoid valves can be mounted together on the manifold.

●Solenoid valves

■**3-position valve**
Valve function
Closed center: **Blank**
Exhaust center: **-13**
Pressure center: **-14**

■**Sub-base**
Without sub-base: **Blank**
With sub-base: **-25**

■**Manual override**
Locking type: **-81**
Locking protruding type: **-83**
Locking manual lever type: **-84**

■**Wiring type**
Straight connector
with LED indicator: **-PSL**
L connector
with LED indicator: **-PLL**

		Basic model					Voltage
Sub-base piping	5-port double solenoid	A180-4ME2		-25	-81 -83 -84	-PSL -PLL	DC24V
	5-port 3-position	A183-4ME2	-13, -14				

Note: They cannot be used as single units.

●Always select one from each group.

●Manifold

■**3-position valve**
Valve function
Closed center: **Blank**
Exhaust center: **-13**
Pressure center: **-14**

■**Manual override**
Locking type : **-81**
Locking protruding type: **-83**
Locking manual lever type: **-84**

■**Wiring type**
Straight connector
with LED indicator: **-PSL**
L connector
with LED indicator: **-PLL**

■**Manifold**
Connection port
Quick fitting for ϕ 4 tube: **-J4**
Quick fitting for ϕ 6 tube: **-J6**

	Manifold model/Number of units			Station	Basic model					Voltage
Manifold for combination mounting of 2-, 3-, 5-port valves	180M	2 ⋮ 20	A AJ	stn.□ ⋮ stn.□	-A180-4ME2		-81 -83 -84	-PSL -PLL	-J4 -J6	DC24V
					-A183-4ME2	-13, -14				

●Valve mounting location from the left-hand side when facing the 4(A), 2(B) ports.

●Specify the valve model for each station.
●Enter **-BP** when closing a station with a block-off plate without mounting a valve.

●Always select one from each group.

●For the AJ type manifold only, specify either of the two.

Options

■**Wiring type**

Straight connector with LED indicator

L connector with LED indicator

●Lead wire length 300mm

■**Manual override**

Locking type

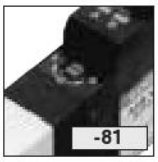

Locking protruding type

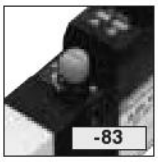

Locking manual lever type

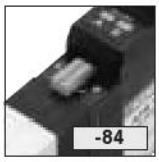

■**AJ type manifold**

Quick fitting for ϕ 4 tube

Quick fitting for ϕ 6 tube

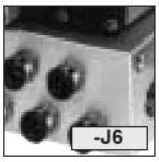

●Specify the tube size for each station.

Additional Parts (To be ordered separately)

Speed controller

●For sub-base piping

Muffler

●For sub-base piping

Block-off plate

● 180 MA-BP
180 — For 180M

Made to Order

Lead wire length

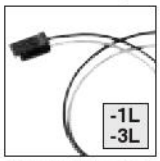

●For plug connector
●Length (mm) **-1L**: 1000 [39in.]
-3L: 3000 [118in.]

180 Series Solenoid Valve, Air-piloted Valve Order Codes

2-, 3-port valve Number of ports

3-port

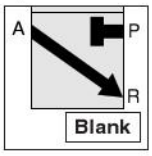

2-port

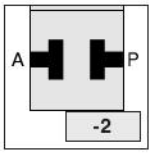

2-, 3-port valve Valve function

Normally closed (NC)

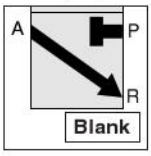

Normally open (NO)

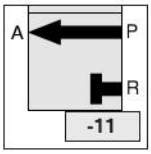

3-position valve Valve function

Closed center

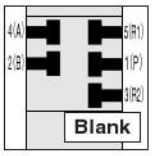

Exhaust center

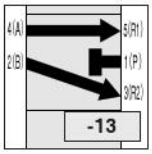

Pressure center

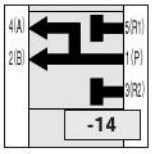

Sub-base

Without sub-base

With sub-base

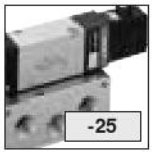

Port fitting specifications[Note 2]

Female thread: **Blank**

-J41, -J42, -J43: Quick fitting for ϕ 4 tube
-J61, -J62, -J63: Quick fitting for ϕ 6 tube

●2(A) port of 181E1 (4(A) port of 180E1)

●1(P), 2(A) ports of 181E1

●4(A), 2(B) ports of 5-port

●1(P), 4(A), 2(B) ports of 5-port

Manual override

Non-locking type

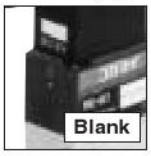

Locking protruding type

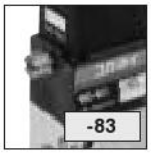

Wiring type

●Lead wire length: 300mm [11.8in.] is standard.

Grommet type

Straight connector with LED indicator

L connector with LED indicator

		Basic model								Voltage
Direct piping	2-, 3-port	181E1	-2	-11			-J41,-J42 -J61,-J62	-83	-PSL -PLL	DC12V DC24V AC100V AC200V
	5-port single solenoid	180-4E1					-J42,-J43 -J62,-J63			
	5-port double solenoid	180-4E2								
	5-port 3-position	183-4E2			-13 -14					
Sub-base piping	2-, 3-port	A181E1	-2	-11		-25		-83	-PSL -PLL	DC12V DC24V AC100V AC200V
	5-port single solenoid	A180-4E1								
	5-port double solenoid	A180-4E2								
	5-port 3-position	A183-4E2			-13 -14					
For manifold with combination mounting of 2-, 3-, 5-port valves only[Note 1]	2-, 3-port for 180□F, FE	180E1	-2	-11			-J41 -J61	-83	-PSL -PLL	DC12V DC24V AC100V AC200V
	5-port, 2-position twin solenoid	180-4KE2					-J42 -J62			
	5-port, 3-position twin solenoid	183-4KE2			-13 -14					
	2-, 3-port for 180□A, AJ	A180E1	-2	-11						
	5-port, 2-position twin solenoid	A180-4KE2								
	5-port, 3-position twin solenoid	A183-4KE2			-13 -14					
Direct piping air-piloted valve (made to order)	5-port single pilot	180-4A					-J42,-J43 -J62,-J63			
	5-port double pilot	180-4A2								
Sub-base piping air-piloted valve (made to order)	5-port single pilot	A180-4A				-25				
	5-port double pilot	A180-4A2								

Notes: 1. They cannot be used as single units.
2. The port fittings are for ϕ 4: TSK4-M8M, and for ϕ 6: TSK6-M8M.

Additional Parts (To be ordered separately)

Speed controller

●For direct piping

●For sub-base piping

Muffler

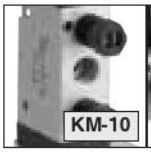

●For direct piping

●For sub-base piping

Mounting base

●For direct piping
●For 2-, 3-port and 5-port single solenoids

Block-off plate

● □ M □ -BP

181—For 181M
180—For 180M

F —For F type manifold
FE—For FE type manifold
A —For A type, AJ type manifolds

180 Series Manifold Order Codes

2-, 3-port valve Number of ports

3-port

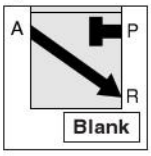

2-port

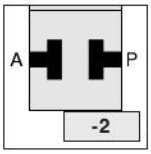

2-, 3-port valve Valve function

Normally closed (NC)

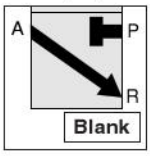

Normally open (NO)

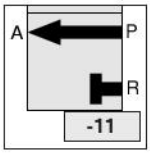

3-position valve Valve function

Closed center

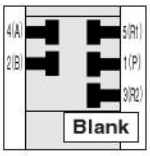

Exhaust center

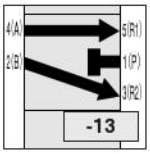

Pressure center

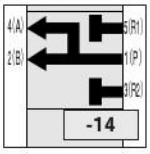

Port fitting specifications Note 1

Female thread: **Blank**

-J41,-J42: Quick fitting for ϕ 4 tube

-J61,-J62: Quick fitting for ϕ 6 tube

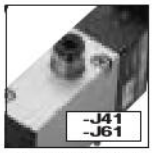

●2(A) port of **181E1** (4(A) port of **180E1**)

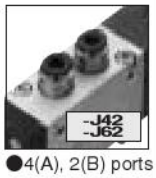

●4(A), 2(B) ports of 5-port

Manual override

Non-locking type

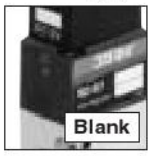

Locking protruding type

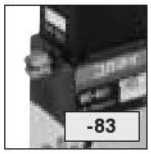

Wiring type

●Lead wire length: 300mm [11.8in.] is standard.

Grommet type

Straight connector with LED indicator

L connector with LED indicator

Straight connector with LED indicator

L connector with LED indicator

●**-CP□L**: DC12V and DC24V positive side, and AC100V, AC200V.

●**-CM□L**: DC12V and DC24V negative side.

Manifold Connection port

Quick fittings for ϕ 4 tube

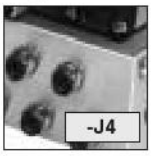

Quick fittings for ϕ 6 tube

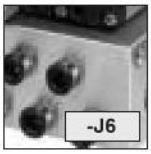

	Manifold model	Number of units	Station	Basic model							Voltage
Manifold for 2-, 3-port valves	181M	2 ⋮ 20	F	-181E1	-2	-11	-J41 -J61	-83	-PSL -PLL -CPSL -CMSL -CPLL -CMLL	-J4 -J6	DC12V DC24V AC100V AC200V
			A AJ	-A181E1	-2	-11					
Manifold for combination mounting of 2-, 3-, 5-port valves	180M	2 ⋮ 20	F FE	-180E1	-2	-11	-J41 -J61	-83	-PSL -PLL -CPSL -CMSL -CPLL -CMLL		DC12V DC24V AC100V AC200V
				-180-4E1			-J42 -J62				
				-180-4E2							
				-180-4KE2							
				-183-4E2		-13 -14					
				-183-4KE2							
			A AJ	-A180E1	-2	-11		-83	-PSL -PLL -CPSL -CMSL -CPLL -CMLL	-J4 -J6	DC12V DC24V AC100V AC200V
				-A180-4E1							
				-A180-4E2							
				-A180-4KE2							
				-A183-4E2		-13 -14					
				-A183-4KE2							
Manifold for mounting 5-port (made to order)	180M	2 ⋮ 20	F	-180-4A			-J42 -J62				
				-180-4A2							
			A AJ	-A180-4A						-J4 -J6	
				-A180-4A2							

Note: The port fittings are for ϕ 4: TSK4-M8M, and for ϕ 6: TSK6-M8M.

●Specify the valve model for each station.
●Enter **-BP** when closing a station with a block-off plate without mounting a valve.

●Valve mounting location from the left-hand side when facing the 4(A), 2(B) ports.
●Since a twin solenoid valve requires 2 stations per valve to mount, the second station (solenoid 12(S1) side) should be blank.

●For the AJ type manifold only.
●It is not required when ordering as a single valve unit.

●Pre-wired common terminal for AC100V and AC200V is either **-CPSL** or **-CPLL**.

Made to Order

The 180 series includes made to order items of various kinds for further system development.
For details, see p.353～360.

Straight connector with LED indicator

●Without lead wire
●Connector, contacts included

L connector with LED indicator

●Without lead wire
●Connector, contacts included

Lead wire length

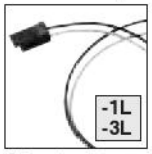

●For plug connector
●Length (mm) **-1L**: 1000 [39in.] **-3L**: 3000 [118in.]

DIN connector

●Cannot be used with **-L**.

LED indicator with built-in varistor

●Cannot be used with **-39**.

Built-in interface unit

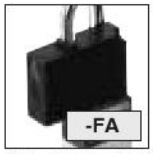

●Possible to be directly controlled by output from micro computer or other logic devices.
●With LED indicator

Sub-base regulator

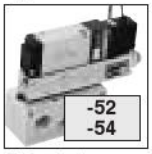

●Regulate the pressure at each station on the manifold.
●**-52**: P port pressure regulating type
-54: B port pressure regulating type

Air-piloted valves 180 series

●5-port, 2-position
●Single pilot
●Double pilot

Operating Principles and Symbols

3-port

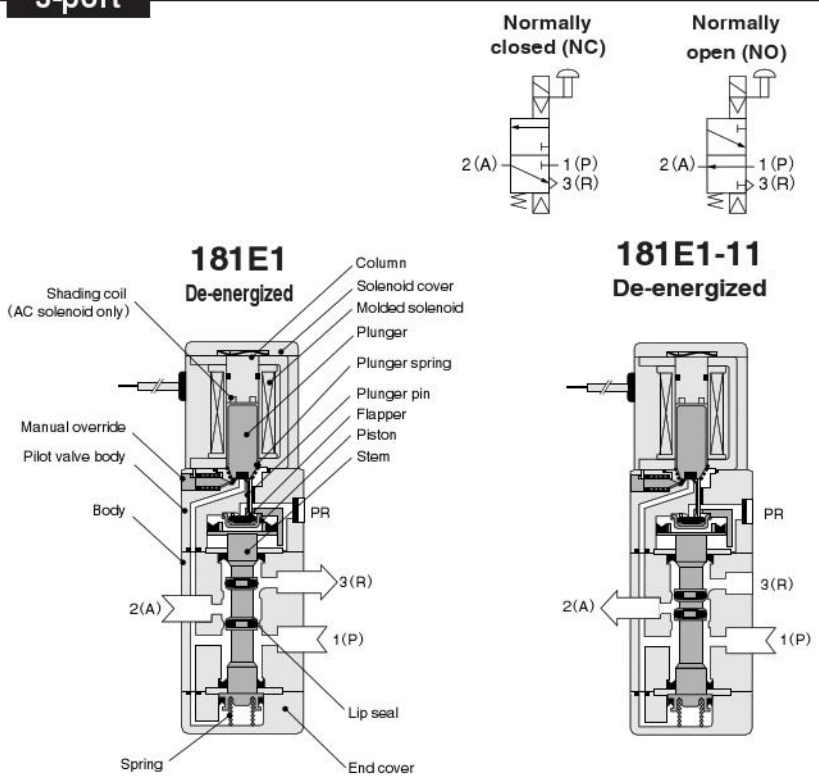

Major Parts and Materials

Parts		Materials
Valve	Body	Aluminum alloy (anodized)
	Stem	
	Lip seal	Synthetic rubber
	Flapper	
	Mounting base	Mild steel (zinc plated)
	Sub-base	Aluminum alloy (anodized)
	Plunger	Magnetic stainless steel
	Column	
Manifold	Body	Aluminum alloy (anodized)
	Block-off plate	Mild steel (nickel plated)
	Seal	Synthetic rubber

5-port, 2-position

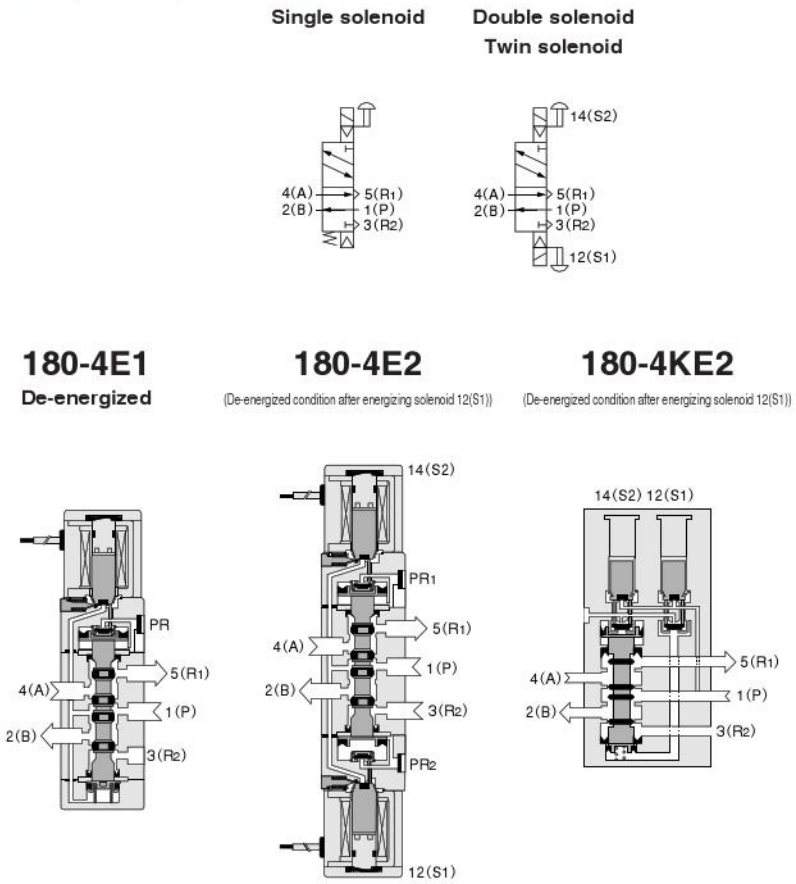

5-port, 3-position

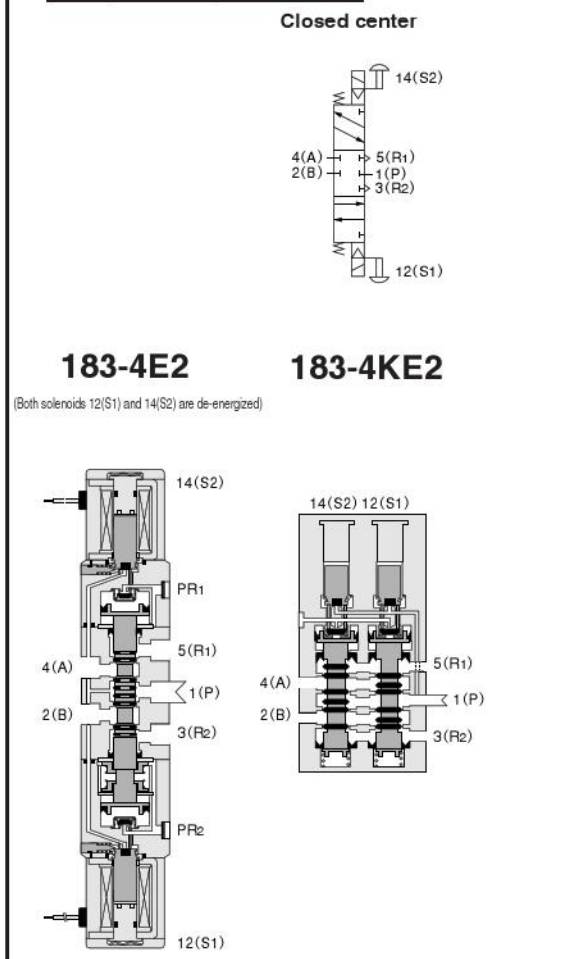

Dimensions of Solenoid Valve, 2-, 3-port (mm)

181E1

181E1

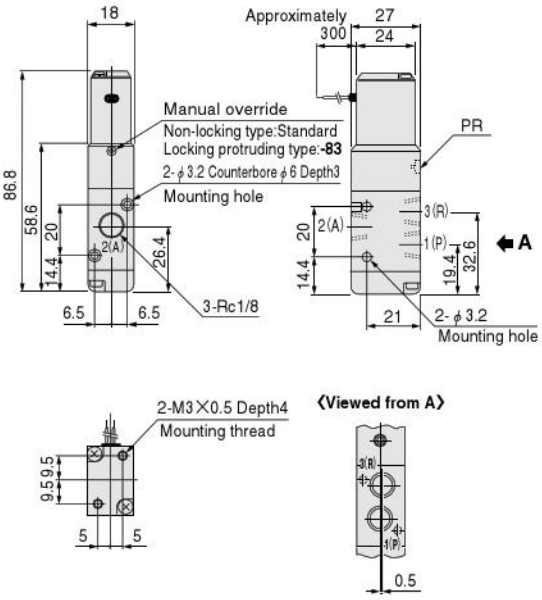

A181E1-25

A181E1

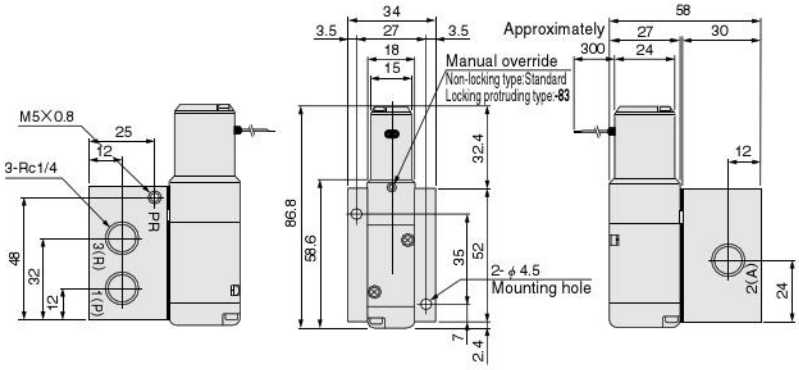

183-4E2-13 183-4KE2-13 183-4E2-14 183-4KE2-14

(Both solenoids 12(S1) and 14(S2) are de-energized)

(Both solenoids 12(S1) and 14(S2) are de-energized)

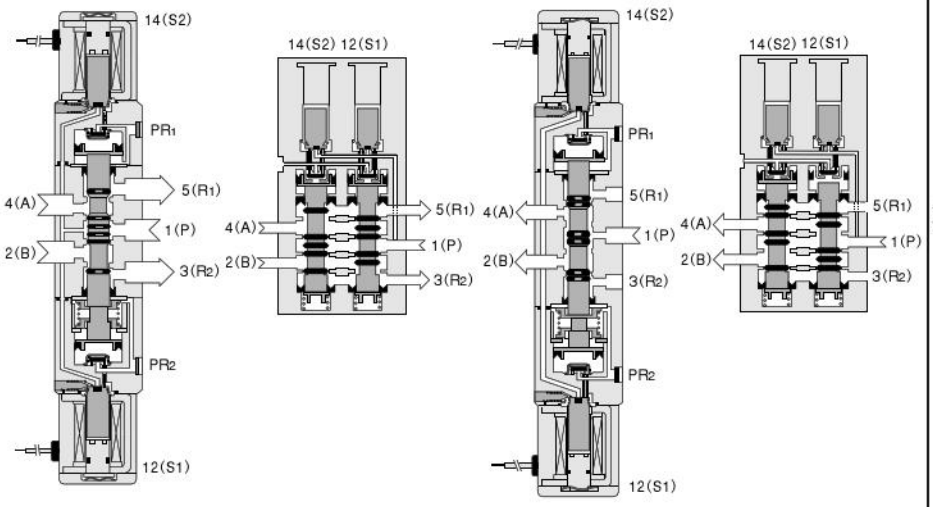

Additional Parts (To be ordered separately)

●Mounting base: **180-21**

180-BASE

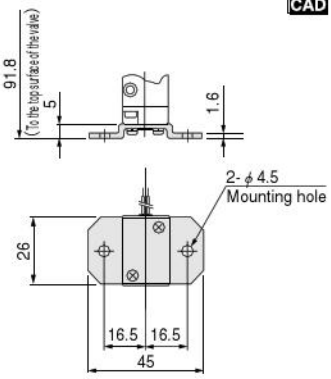

●Muffler

180-MUFF

For direct piping: **KM-10**

For sub-base piping: **KM-22**

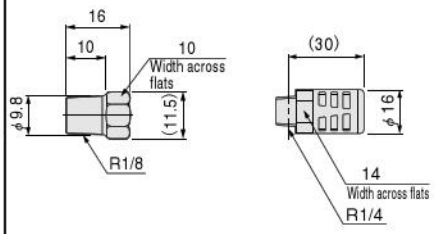

●Speed controller

180-SC

For direct piping: **SCE-01**

For sub-base mounting: **SCE-02**

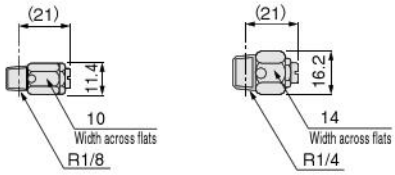

Dimensions of Solenoid Valve 5-port , 2-, 3-position (mm)

180-4E1

180-4E1

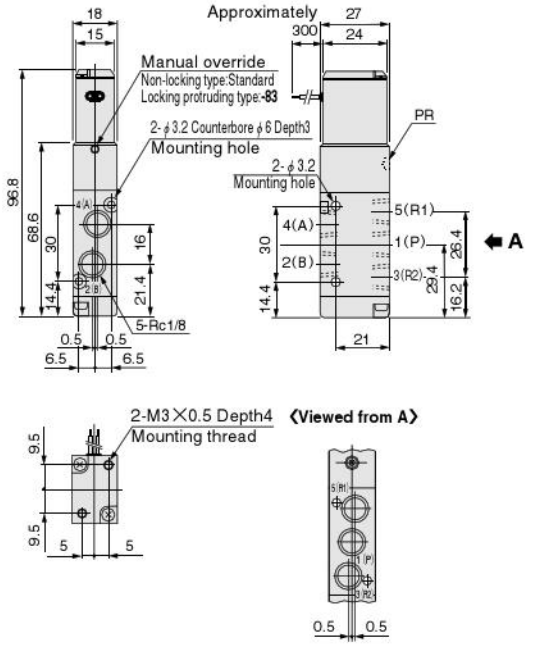

A180-4E1-25

A180-4E1

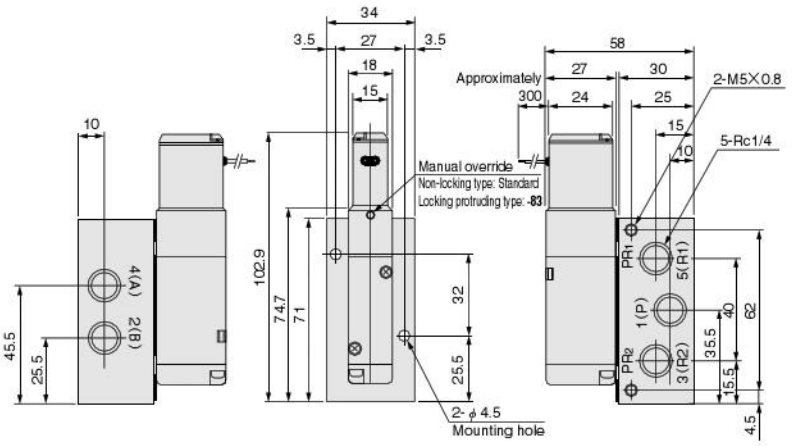

180-4E2

180-4E2

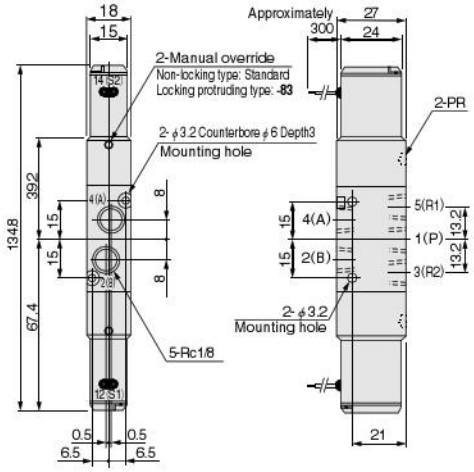

A180-4E2-25

A180-4E2

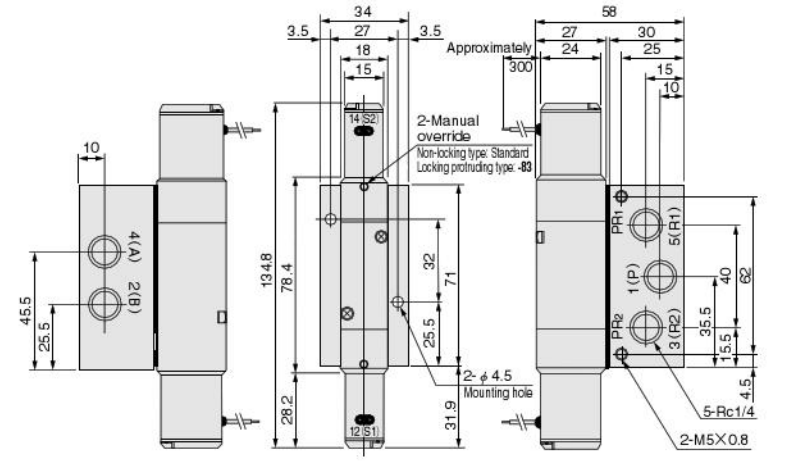

183-4E2

183-4E2

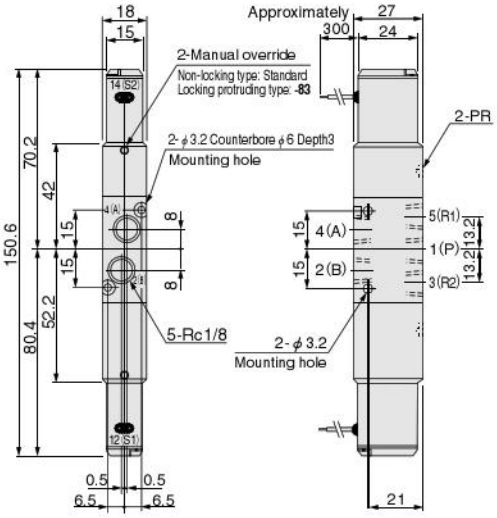

A183-4E2-25

A183-4E2

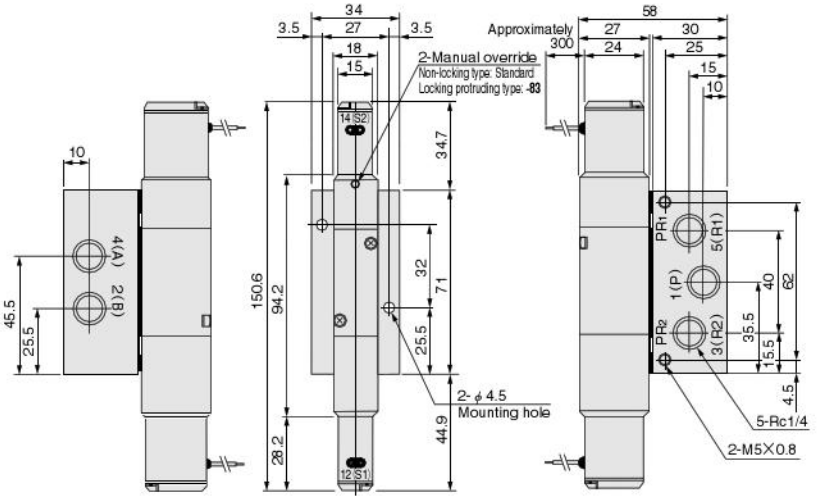

Additional Parts (To be ordered separately)

●Mounting base: **180-21** 180-BASE ●Muffler 180-MUFF ●Speed controller 180-SC

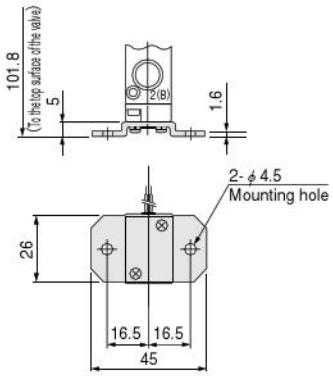

For direct piping: **KM-10** For sub-base piping: **KM-22**

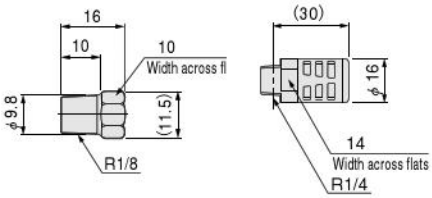

For direct piping: **SCE-01** For sub-base mounting: **SCE-02**

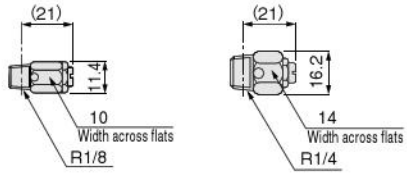

Options

●With quick fittings (2-, 3-port):

-J41 (For φ4 tube, 2(A) or 4(A) port with fitting)
-J42 (For φ4 tube, 1(P), 2(A) ports with fittings)
-J61 (For φ6 tube, 2(A) or 4(A) port with fitting)
-J62 (For φ6 tube, 1(P), 2(A) ports with fittings)
The drawing shows the -J62 specification.

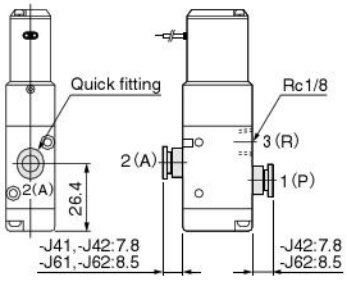

●With quick fittings (5-port):

-J42 (For φ4 tube, 4(A), 2(B) ports with fittings)
-J43 (For φ4 tube, 1(P), 4(A), 2(B) ports with fittings)
-J62 (For φ6 tube, 4(A), 2(B) ports with fittings)
-J63 (For φ6 tube, 1(P), 4(A), 2(B) ports with fittings)
The drawing shows the -J63 specification.

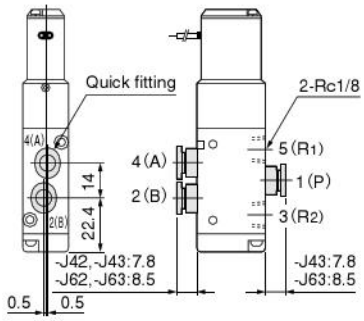

●Locking protruding type manual override: **-83**
180-ROCK

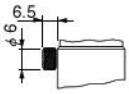

●Solenoid with straight connector: **-PSL**
180-PSL□

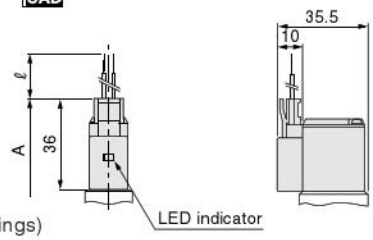

●Solenoid with L connector: **-PLL**
180-PLL□

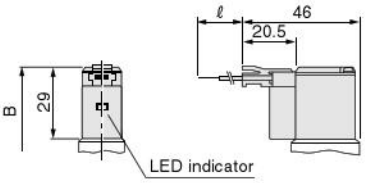

Remark: Quick fittings are the following types:
TSK4-M8M (for φ4 tube), **TSK6-M8M** (for φ6 tube)

Made to Order

180-PSL□

●Solenoid with DIN connector: **-39**

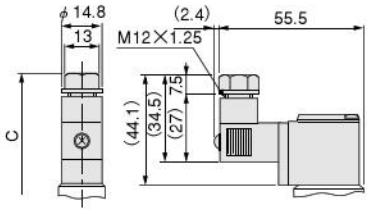

●Solenoid with LED indicator: **-L**

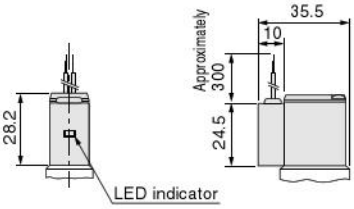

●Built-in interface unit: **-FA**

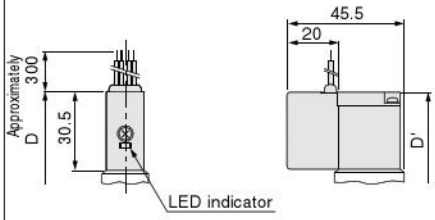

mm

Model / Code	A	B	C	D	D'	ℓ (lead wire length)	Remarks
181E1, 181E1-25	94.6	87.6	102.7	89.1	89.3	**-PSL, -PLL**: 300 Made to order: **-1L**: 1000, **-3L**: 3000	Overall length to the end of the valve or sub-base
180-4E1, 180-4KE2,A183-4KE2	104.6	97.6	112.7	99.1	99.3		
A180-4E1-25	110.7	103.7	118.8	105.2	105.4		
180-4E2, A180-4E2-25	150.4	136.4	166.6	139.4	139.8		Overall length to the end of the opposite side solenoid
183-4E2, A183-4E2-25	166.2	152.2	182.4	155.2	155.6		

A180-4ME2-25-PSL

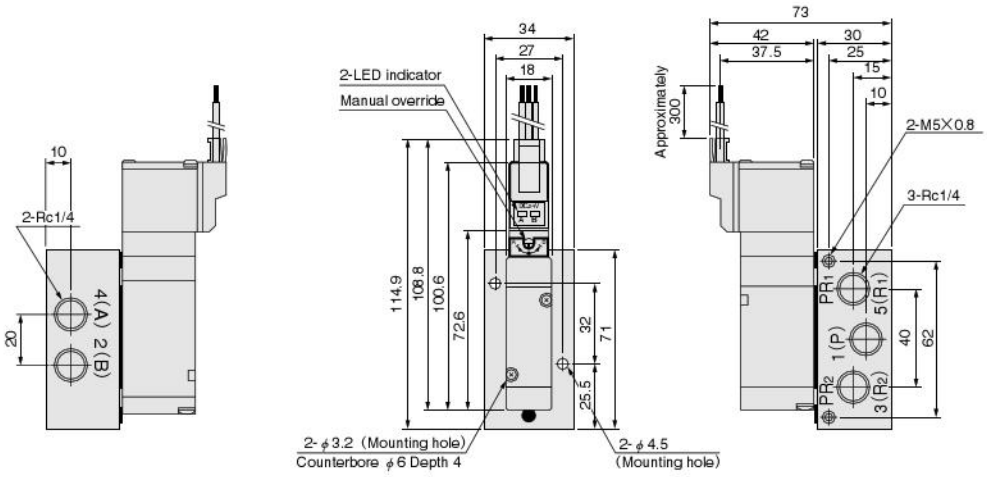

A180-4ME2-25-PLL

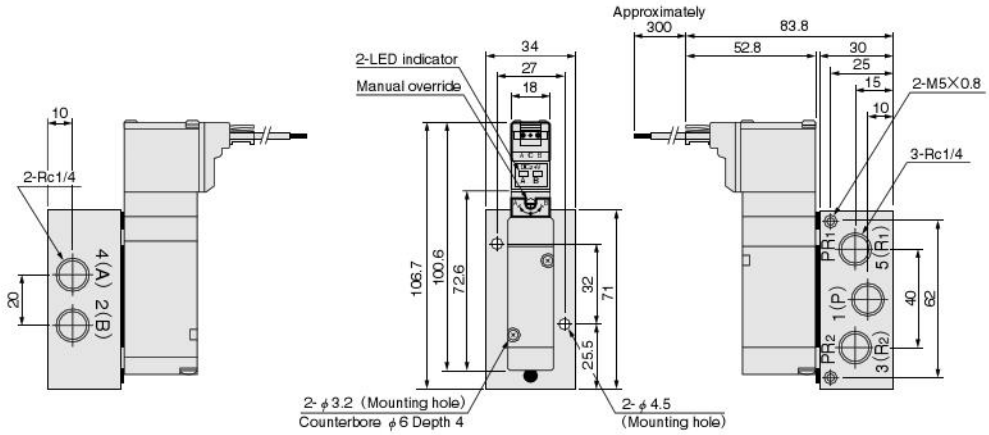

Options

●Locking protruding type: **-83**

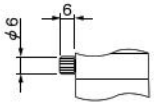

●Locking manual lever type: **-84**

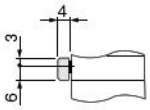

A183-4ME2-25-PSL

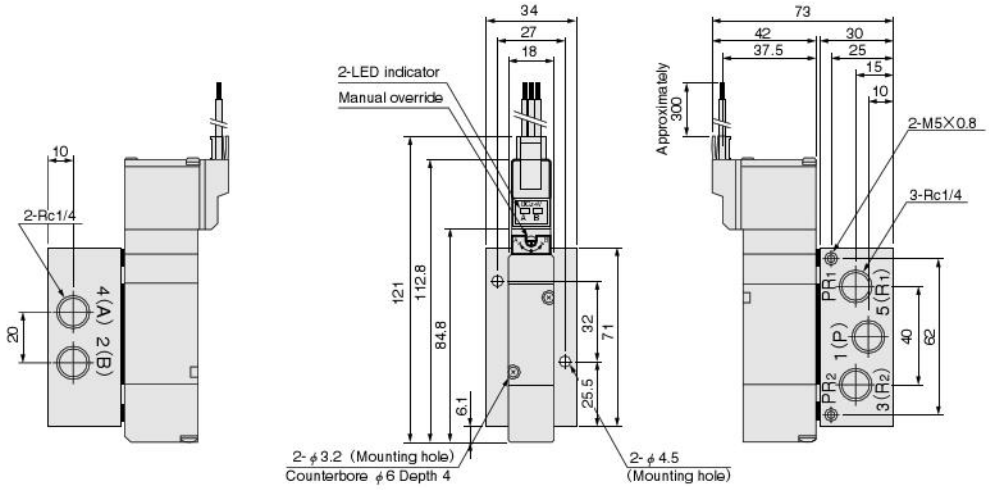

A183-4ME2-25-PLL

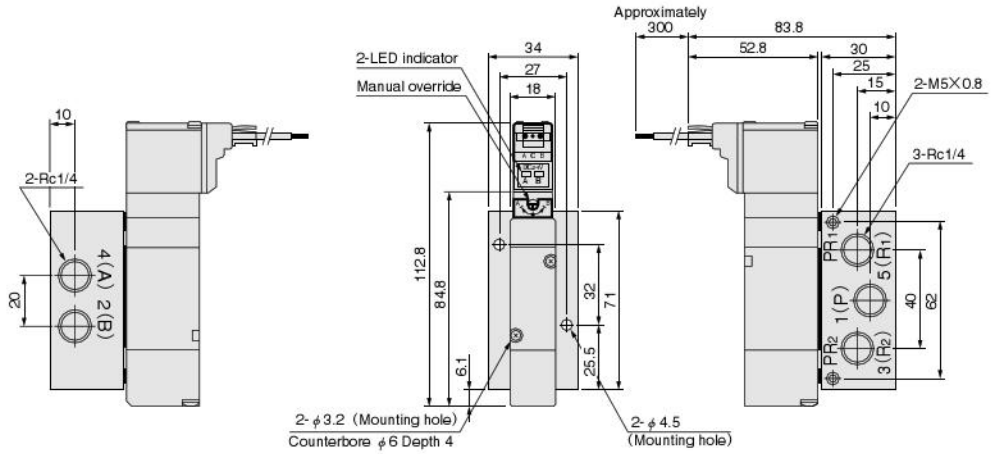

Options

●Locking protruding type: **-83**

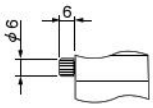

●Locking manual lever type: **-84**

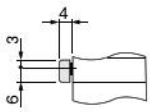

181M□F

181M-F

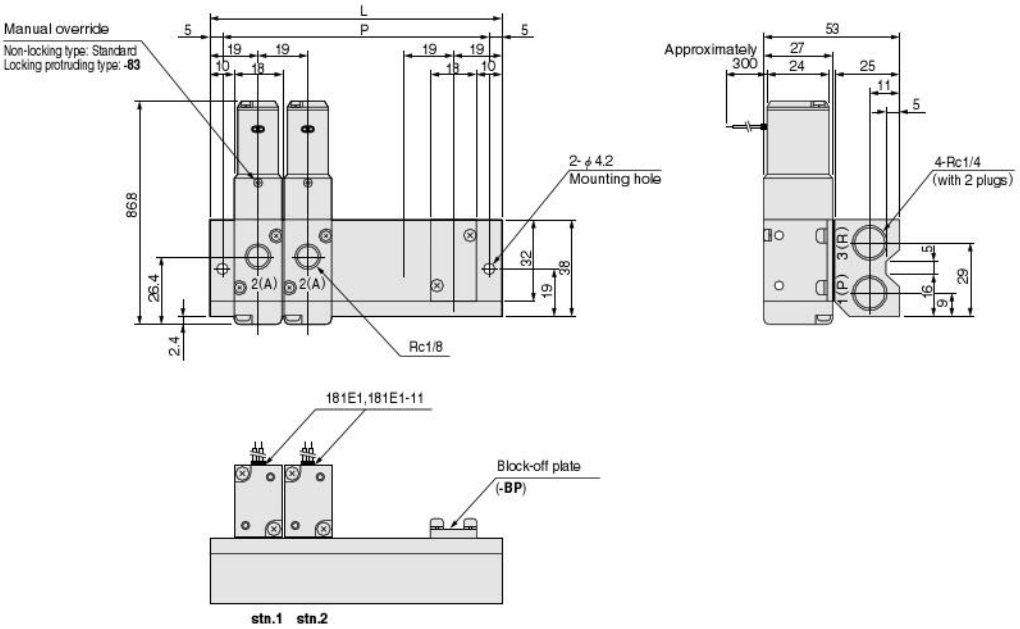

Unit dimensions

Model	L	P
181M2F	57	47
3F	76	66
4F	95	85
5F	114	104
6F	133	123
7F	152	142
8F	171	161
9F	190	180
10F	209	199
11F	228	218
12F	247	237
13F	266	256
14F	285	275
15F	304	294
16F	323	313
17F	342	332
18F	361	351
19F	380	370
20F	399	389

181M□A

181M-A

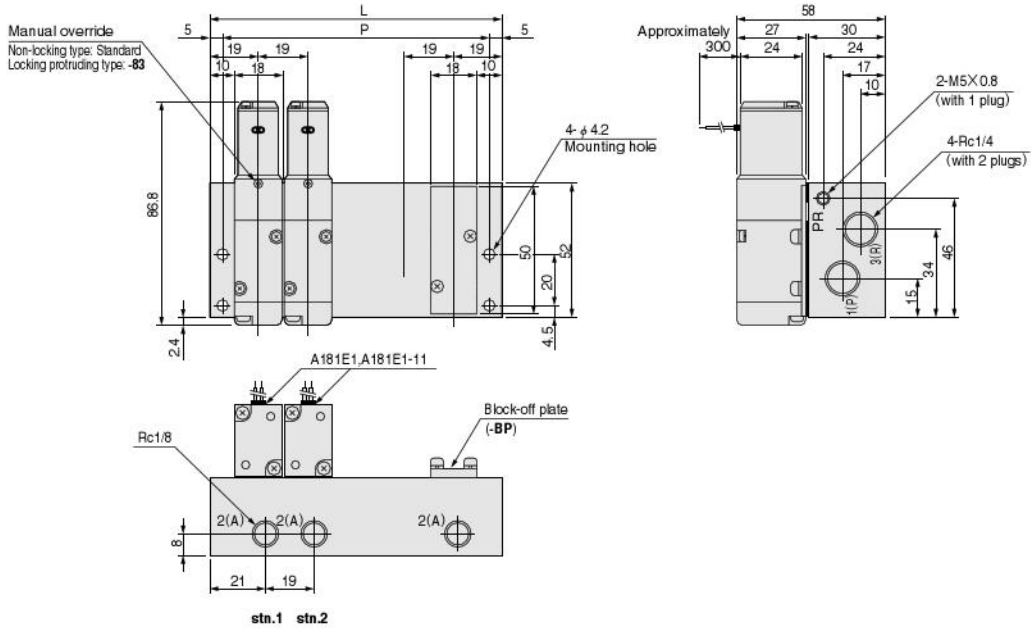

Unit dimensions

Model	L	P
181M2A	57	47
3A	76	66
4A	95	85
5A	114	104
6A	133	123
7A	152	142
8A	171	161
9A	190	180
10A	209	199
11A	228	218
12A	247	237
13A	266	256
14A	285	275
15A	304	294
16A	323	313
17A	342	332
18A	361	351
19A	380	370
20A	399	389

181M□AJ

181M-A

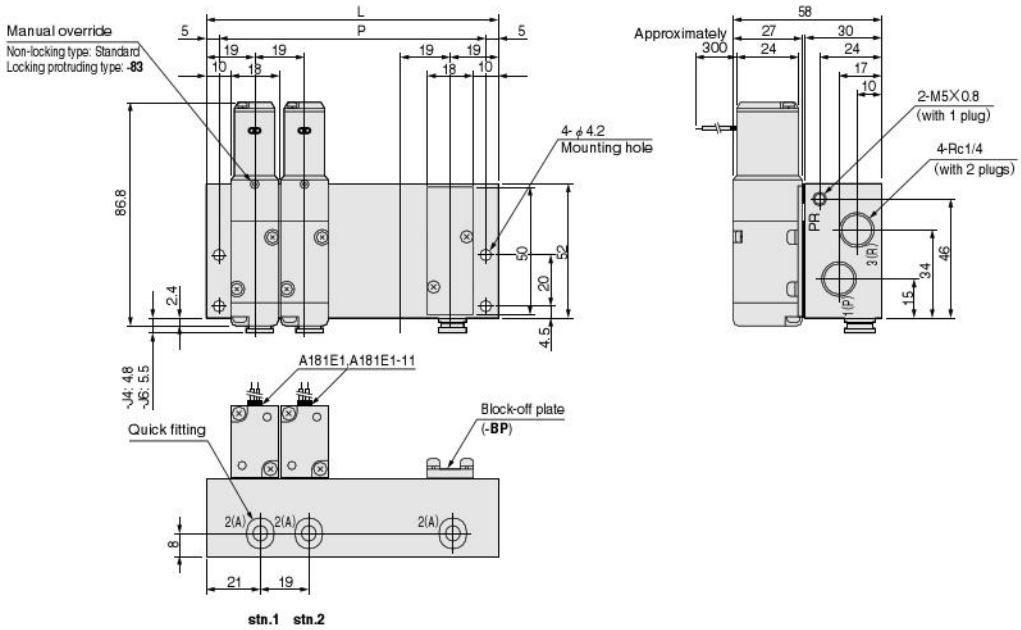

Unit dimensions

Model	L	P
181M2AJ	57	47
3AJ	76	66
4AJ	95	85
5AJ	114	104
6AJ	133	123
7AJ	152	142
8AJ	171	161
9AJ	190	180
10AJ	209	199
11AJ	228	218
12AJ	247	237
13AJ	266	256
14AJ	285	275
15AJ	304	294
16AJ	323	313
17AJ	342	332
18AJ	361	351
19AJ	380	370
20AJ	399	389

Options

●With quick fitting (2-, 3-port):

-J41 (For φ4 tube, 2(A) or 4(A) port with fitting)

-J61 (For φ6 tube, 2(A) or 4(A) port with fitting)

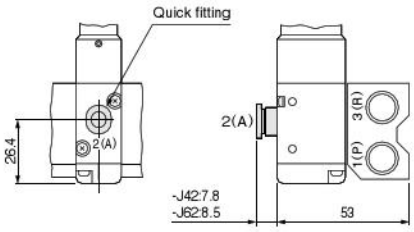

●With quick fittings (5-port):

-J42 (For φ4 tube, 4(A), 2(B) ports with fittings)

-J62 (For φ6 tube, 4(A), 2(B) ports with fittings)

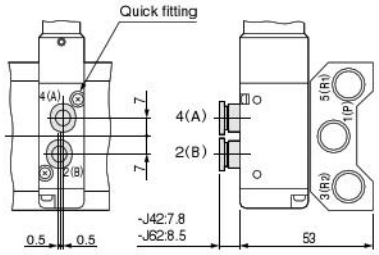

Remark: Quick fittings are the following types:
TSK4-M8M (for φ4 tube), **TSK6-M8M** (for φ6 tube)

●Locking protruding type manual override: **-83**

180-ROCK

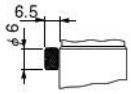

●Solenoid with straight connector: **-PSL**

180-PSL□

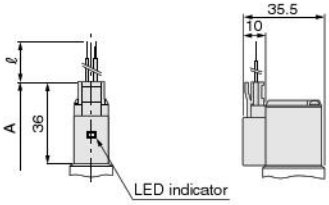

●Solenoid with L connector: **-PLL**

180-PLL□

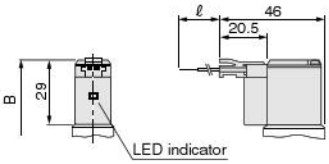

Made to Order

180-PSL□

●Solenoid with DIN connector: **-39**

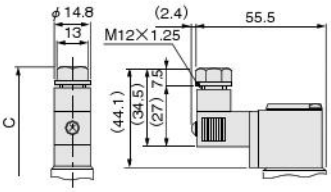

●Solenoid with LED indicator: **-L**

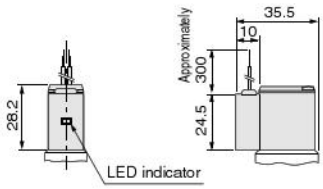

●Built-in interface unit: **-FA**

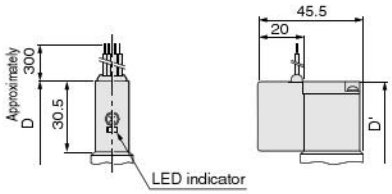

mm

Model / Code	A	B	C	D	D'	ℓ (lead wire length)
181E1, A181E1	94.6	87.6	102.7	89.1	89.3	**-PSL, -PLL**: 300 Made to order: **-1L**: 1000, **-3L**: 3000
180E1, 180-4E1, 180-4KE2, 183-4KE2, A180-4E1	104.6	97.6	112.7	99.1	99.3	
180-4E2, A180-4E2	150.4	136.4	166.6	139.4	139.8	
183-4E2, A183-4E2	166.2	152.2	182.4	155.2	155.6	

180M□F

180M-F

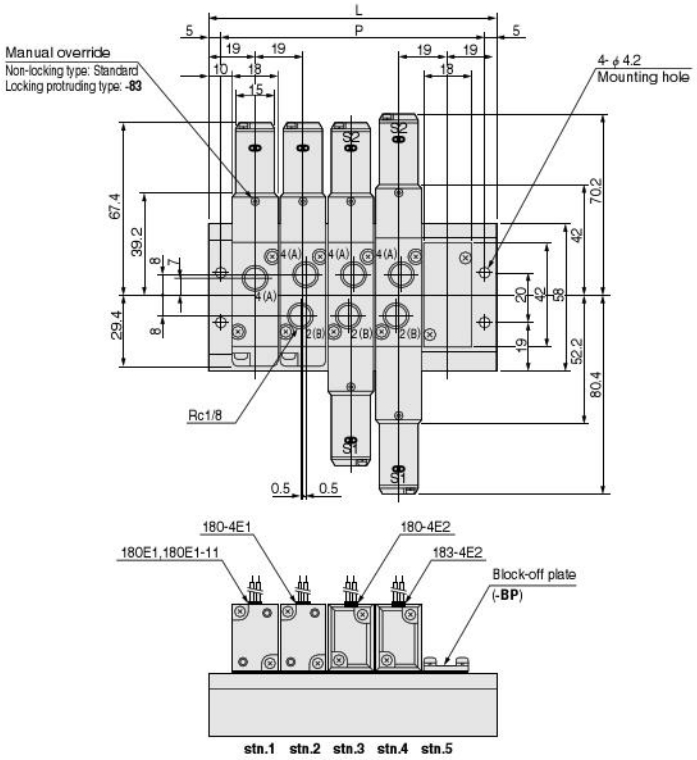

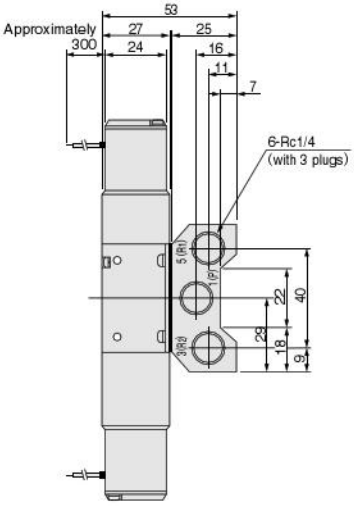

Unit dimensions

Model	L	P
180M2F	57	47
3F	76	66
4F	95	85
5F	114	104
6F	133	123
7F	152	142
8F	171	161
9F	190	180
10F	209	199
11F	228	218
12F	247	237
13F	266	256
14F	285	275
15F	304	294
16F	323	313
17F	342	332
18F	361	351
19F	380	370
20F	399	389

180M□FE

180M-FE

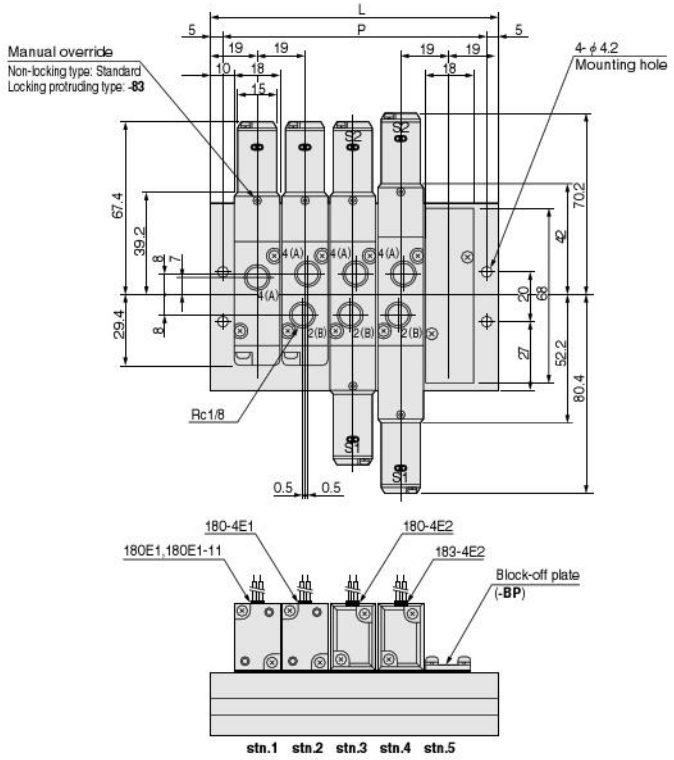

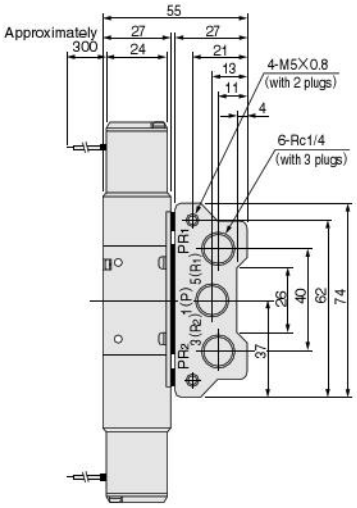

Unit dimensions

Model	L	P
180M2FE	57	47
3FE	76	66
4FE	95	85
5FE	114	104
6FE	133	123
7FE	152	142
8FE	171	161
9FE	190	180
10FE	209	199
11FE	228	218
12FE	247	237
13FE	266	256
14FE	285	275
15FE	304	294
16FE	323	313
17FE	342	332
18FE	361	351
19FE	380	370
20FE	399	389

For options and made to order, see p.348.

180M□A

180M-A

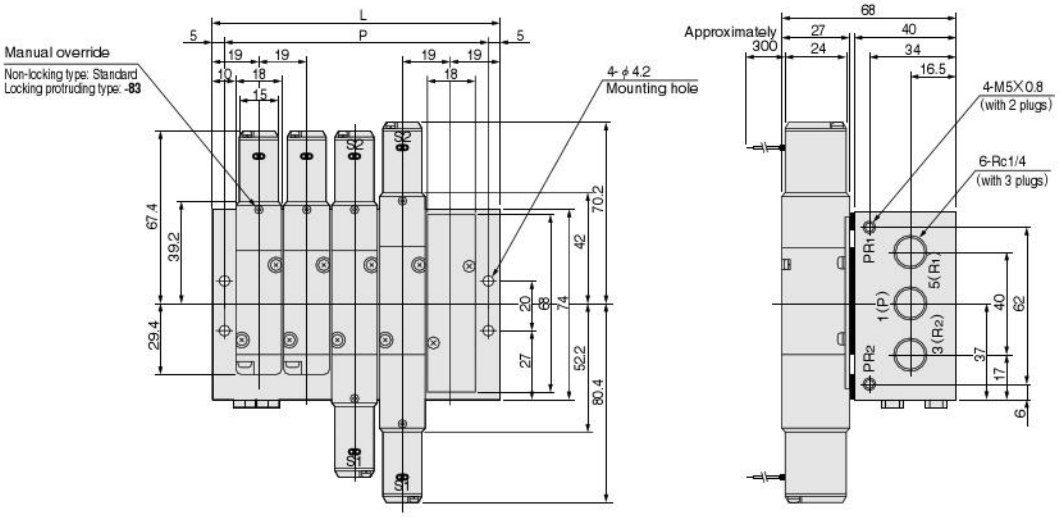

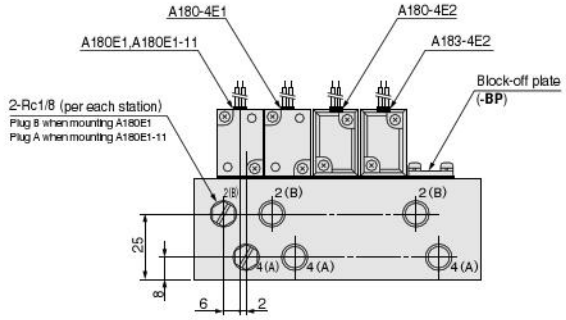

stn.1 stn.2 stn.3 stn.4 stn.5

Unit dimensions

Model	L	P
180M2A	57	47
3A	76	66
4A	95	85
5A	114	104
6A	133	123
7A	152	142
8A	171	161
9A	190	180
10A	209	199
11A	228	218
12A	247	237
13A	266	256
14A	285	275
15A	304	294
16A	323	313
17A	342	332
18A	361	351
19A	380	370
20A	399	389

180M□AJ

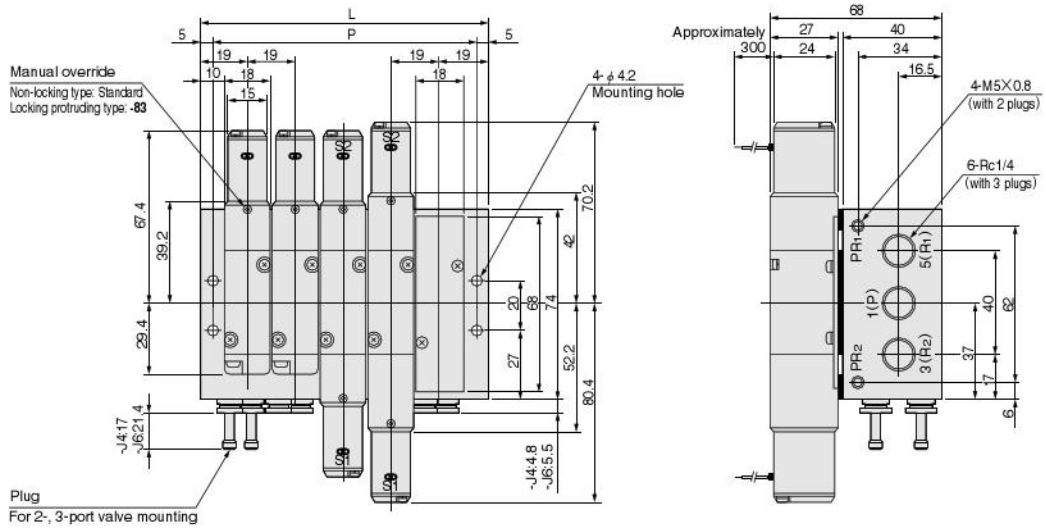

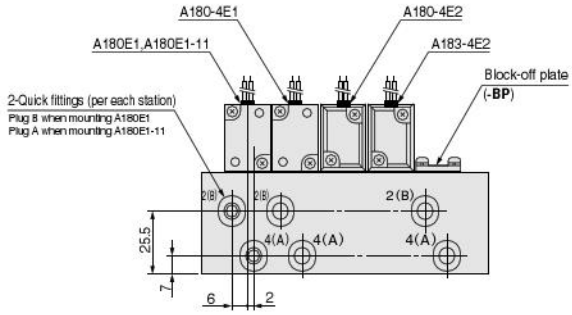

stn.1 stn.2 stn.3 stn.4 stn.5

Unit dimensions

Model	L	P
180M2AJ	57	47
3AJ	76	66
4AJ	95	85
5AJ	114	104
6AJ	133	123
7AJ	152	142
8AJ	171	161
9AJ	190	180
10AJ	209	199
11AJ	228	218
12AJ	247	237
13AJ	266	256
14AJ	285	275
15AJ	304	294
16AJ	323	313
17AJ	342	332
18AJ	361	351
19AJ	380	370
20AJ	399	389

For options and made to order, see p.348.

180M□A

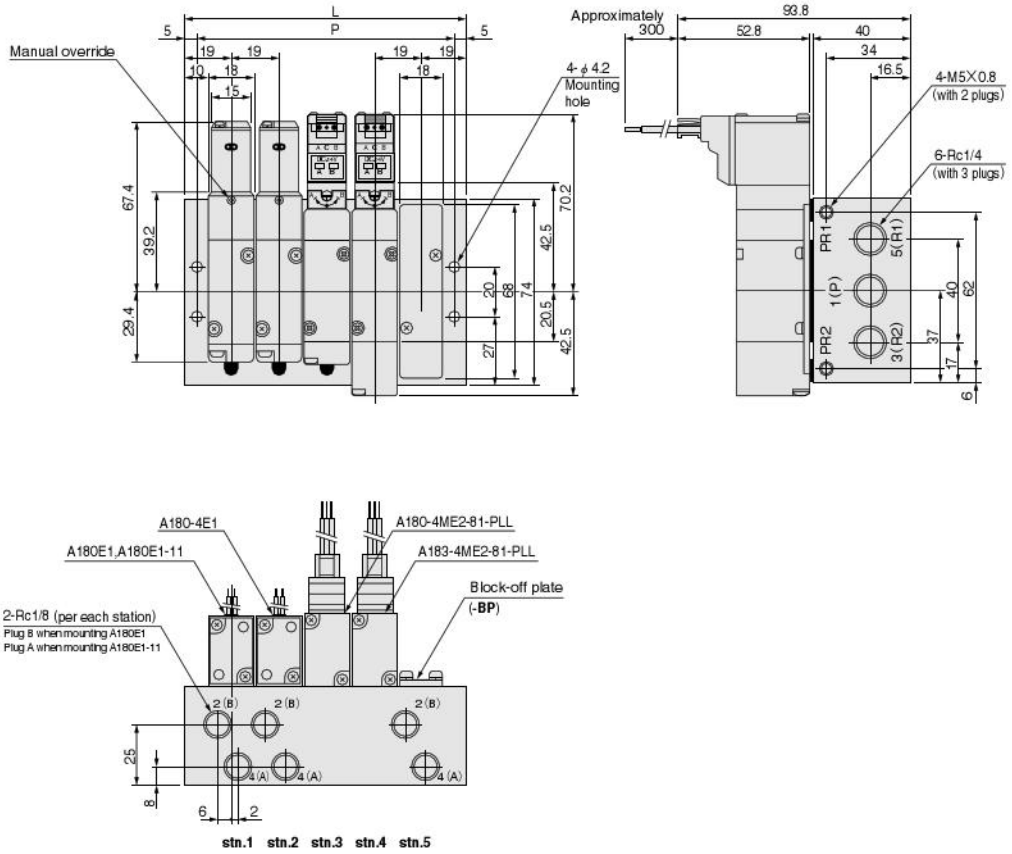

Unit dimensions

Model	L	P
180M2A	57	47
3A	76	66
4A	95	85
5A	114	104
6A	133	123
7A	152	142
8A	171	161
9A	190	180
10A	209	199
11A	228	218
12A	247	237
13A	266	256
14A	285	275
15A	304	294
16A	323	313
17A	342	332
18A	361	351
19A	380	370
20A	399	389

180M□AJ

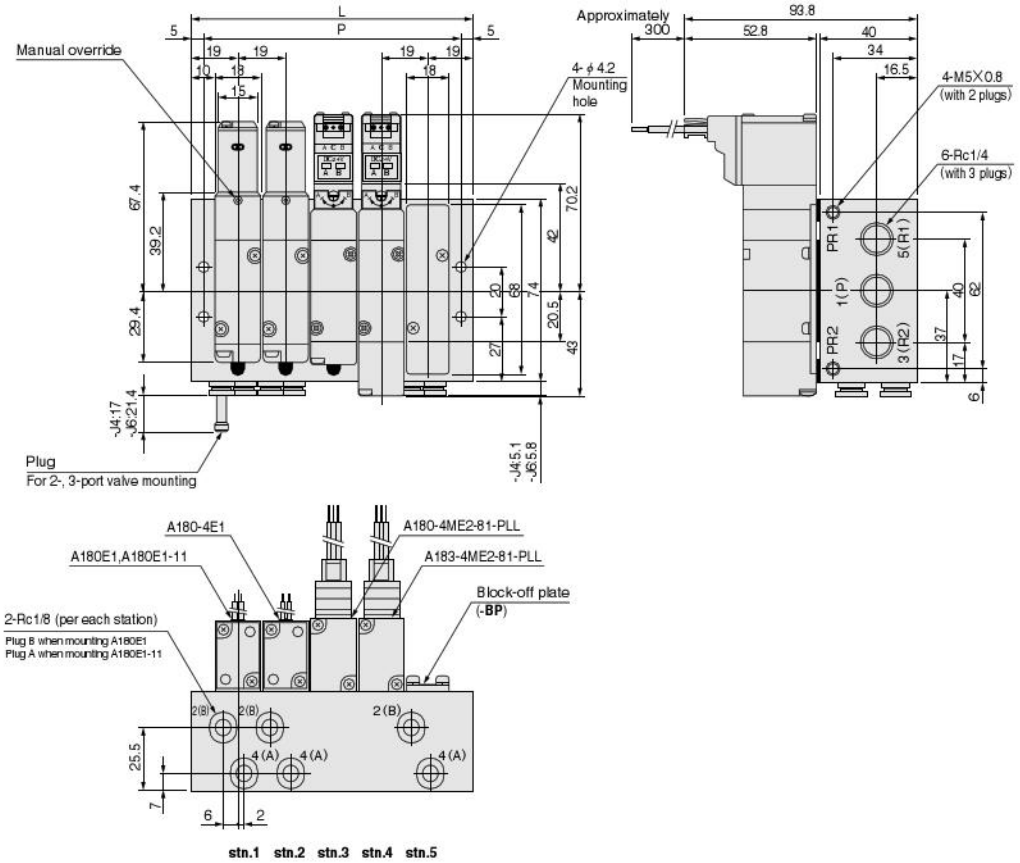

Unit dimensions

Model	L	P
180M2AJ	57	47
3AJ	76	66
4AJ	95	85
5AJ	114	104
6AJ	133	123
7AJ	152	142
8AJ	171	161
9AJ	190	180
10AJ	209	199
11AJ	228	218
12AJ	247	237
13AJ	266	256
14AJ	285	275
15AJ	304	294
16AJ	323	313
17AJ	342	332
18AJ	361	351
19AJ	380	370
20AJ	399	389

Made to Order

The 180 series Solenoid Valves include a variety of made to order solenoids for application in a wider range of control and wiring types.

Plug connector

Straight connector with LED indicator

- Without lead wire
- Connector and contacts included

L connector with LED indicator

- Without lead wire
- Connector and contacts included

- When ordering, enter **-PSLN** or **-PLLN** in place of the normal option code for the wiring type.

Lead wire length

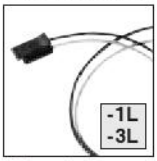

- For plug connector
- Length mm [in.] **-1L**: 1000 [39] **-3L**: 3000 [118]

- For lead wire length, **-1L** is 1000mm [39in.] and **-3L** is 3000mm [118in.].
  When ordering, enter **-1L** or **-3L** following the wiring type option code.

DIN connector

A compact connector that is highly resistant to dust and water splashes.
Employs a self-stripping method that eliminates the need for de-sheathing the lead wire.

- When ordering, enter **-39** in place of the normal option code for the wiring type.
- A varistor for surge suppression is also equipped as standard. (For the AC100V and AC200V only. For DC12V and DC24V, a flywheel diode for surge suppression is installed as standard equipment.)
- LED indicator is not available.

Wiring Instructions

Solenoid with DIN connector

When de-sheathing (only the outer sheath of the cabtyre), pay attention to the lead wire direction. The cover will be easily mounted when the lead wire on the outer side of the terminal cover is set about 8mm [0.31in.] longer than the inner side.
Without stripping off the sheath, insert the lead wire until it contacts the lead wire stopper on the terminal body, and then place the contact from the upper side. Then use pliers to press the lead wire further to ensure that the contact is firmly touching the core wire.

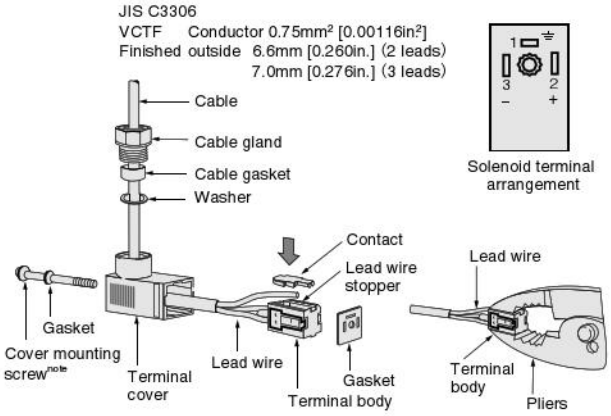

Note: The appropriate tightening torque for the cover mounting screw is 29.4N・cm {3kgf・cm} [2.6in・lbf].

LED Indicator

The LED indicator for confirmation of operation is also available without a plug connector. This creates a clean monoblock look with a compact cover.

- When ordering, enter **-L** in place of the normal option code for the wiring type.
- A varistor for surge suppression is also equipped. (For the AC100V and AC200V only. For DC12V and DC24V, a flywheel diode for surge suppression is installed as standard equipment.)

Built-in Interface unit

Includes an interface unit with a photo transistor. Can be directly controlled by a microcomputer and logic chip, and is equipped with full electric noise countermeasures and LED indicators.

- When ordering, enter **-FA** in place of the normal option code for the wiring type.
- Cannot be ordered in combination with any other solenoid option.
- Rated voltages for the solenoid are AC100V and AC200V only.

Block diagram

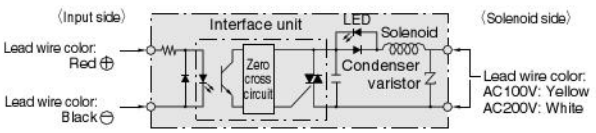

The interface unit is a triac with a photo coupler. Applying DC5V to the input terminals when AC power is applied on the solenoid side causes the LED inside the unit to light up, turns on the triac, and energizes the solenoid. At this time, an LED indicator turns on.
When the input side voltage reaches 0V, the LED inside the unit shuts off, the triac is turned off, and the solenoid is de-energized. At this time, the LED indicator is turned off.
With a built-in zero-cross circuit, the zero-cross voltage is used to turn the power on, and the zero-cross current to turn it off.

Example of control circuits

1. Control by transistor

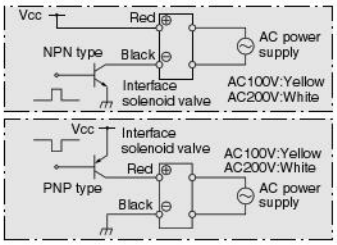

2. Control by TTL, IC

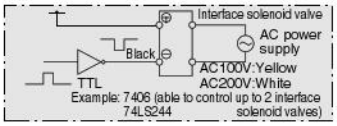

3. Control by relay contact

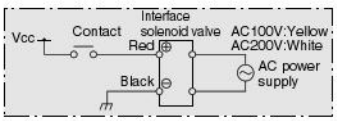

4. When input is not a DC5V power supply

Install resistance externally to drop the input voltage to 4～6V.

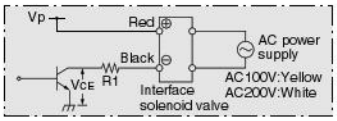

Example

$$R1 = \frac{Vp-5-V_{CE}}{18 \times 10^{-3}} [\Omega]$$

Vp〔V〕	R1
12	390 Ω 1/4W
24	1.0k Ω 1W

In the case of V_{CE}=0〔V〕

Solenoid Specifications for Valve with Built-in Interface Unit

Item			Specifications			
Input side	Rated voltage DC V		5			
	Voltage range DC V		4～6			
	Current (When 5V DC is applied) mA		18			
	Operating voltage DC V		4 or below			
	Return voltage DC V		0.8 or over			
	Color of lead wire		Red (+), Black (−)			
Solenoid side	Rated voltage AC V		100		200	
	Type		Shading type			
	Operating voltage range AC V		90～125 (100 +25 −10 %)		180～250 (200 +25 −10 %)	
	Current (when rated voltage is applied)	Frequency Hz	50	60	50	60
		Starting mA (r.m.s.)	36	32	18	16
		Energizing mA (r.m.s.)	24	20	12	10
	Leakage current	Frequency Hz	50	60	50	60
		Current mA (r.m.s.)	0.3	0.4	0.6	0.8
	Surge suppression (as standard)		Built-in varistor at solenoid side			
	Color of lead wire		Yellow		White	
	Color of LED indicator (as standard)		Yellow		Green	
Voltage resistance			Min. AC1500V at input side and solenoid side			
Insulation resistance MΩ			Between input side and solenoid side, and between whole terminals and body		Over 100	
Zero-cross function			Available			
Wiring type and lead wire length			Grommet type: 300mm [118in.]			

Wiring Instructions

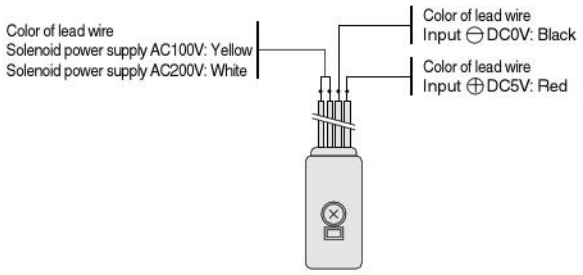

1. Separate the input side and solenoid side lead wires by color. Never apply AC power/6VDC or more to the input side.
2. Ensure that voltage ripple on the input side remains within the range shown below.

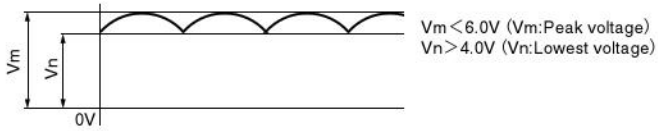

3. Even when a wrong polarity is applied to the input side, a built-in diode for protection against reverse polarity eliminates any worry about short circuiting. The valve will not operate, however.
4. A varistor and condensor are built-in to the solenoid power supply side, for protection circuit against external surge voltages. As a result, there is a 0.3mA leakage current in AC100V, and a 0.6mA leakage current in AC200V.
5. The operation and return times of the interface unit are 10ms or less with a 50Hz AC power supply, and 8ms or less with a 60Hz AC power supply.

Sub-base regulator

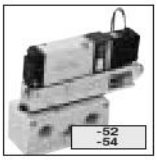

Specifications

Item / Order code	-52 (180MA-52) Note	-54 (180MA-54) Note
Function	1(P) port pressure regulating type	2(B) port pressure regulating type
Media	Air	
Operating pressure range MPa {kgf/cm²}[psi.]	0.15～0.5 {1.5～5.1} [22～73]	
Maximum operating pressure MPa {kgf/cm²}[psi.]	0.7 {7.1} [102]	
Proof pressure MPa {kgf/cm²}[psi.]	1.05 {10.7} [152]	
Operating temperature range °C [°F]	5～50 [41～122]	
Mass g [oz.]	80 [2.82]	

Note: The order code in parentheses ( ) is for the sub-base regulator only.

Flow rate characteristics

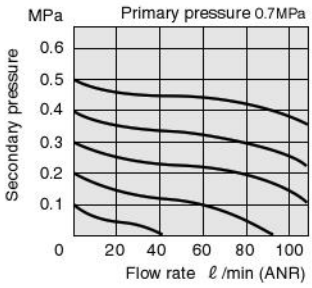

Pressure characteristics

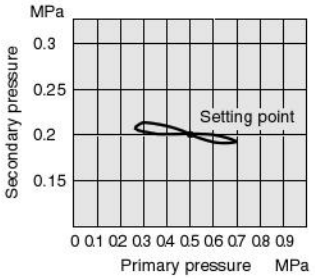

1MPa = 145psi., 1 ℓ/min = 0.0353ft³/min.

Order code

●When mounting on a manifold

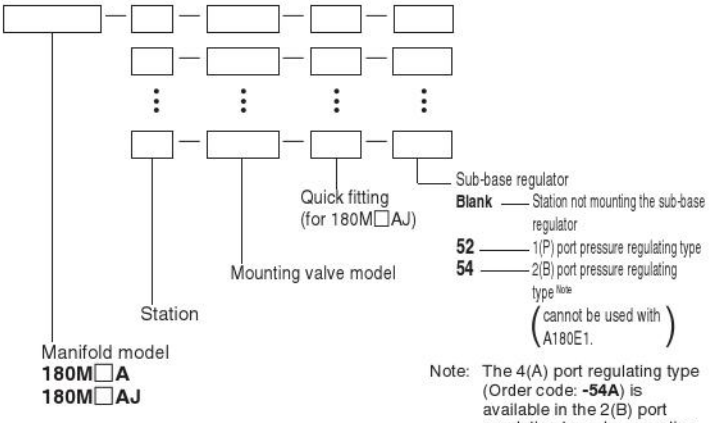

Note: The 4(A) port regulating type (Order code: **-54A**) is available in the 2(B) port regulating type, by mounting its regulating screw on the side with the manifold 3(R) port.

●When mounting on a sub-base

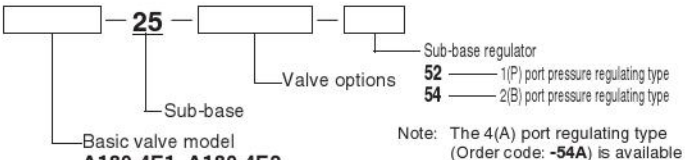

Note: The 4(A) port regulating type (Order code: **-54A**) is available in the 2(B) port regulating type, by mounting its regulating screw on the side with the manifold 3(R) port.

●For sub-base regulators to be ordered separately

180MA-52 — 1(P) port pressure regulating type (with a gasket and mounting screws)
180MA-54 — 2(B) port pressure regulating type (with a gasket and mounting screws)

Operating Principles and Symbols

P port pressure regulating type

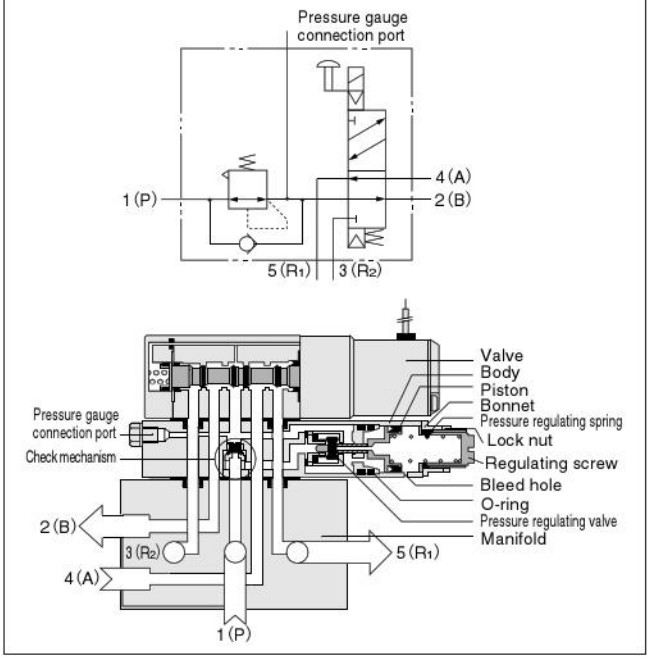

B port pressure regulating type

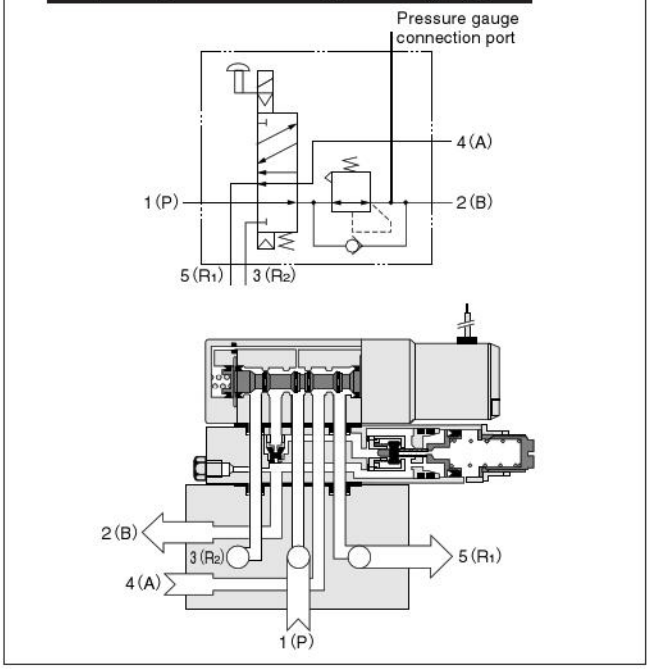

Major Parts and Materials

Parts	Materials
Body	Aluminum alloy (anodized)
Adjusting screw	Brass
Piston	Aluminum alloy (anodized)
Pressure regulating spring	Stainless steel
Seal	Synthetic rubber

Dimensions (mm)

180M□A
180M□AJ

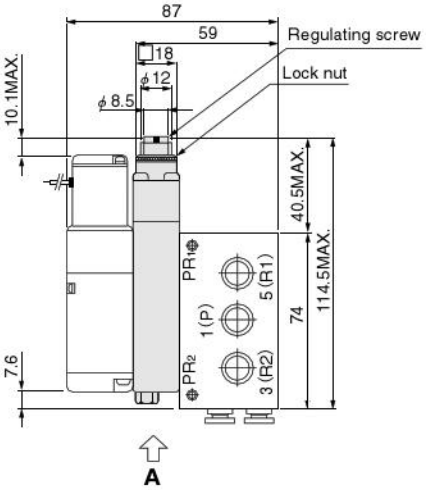

〈Viewed from A〉

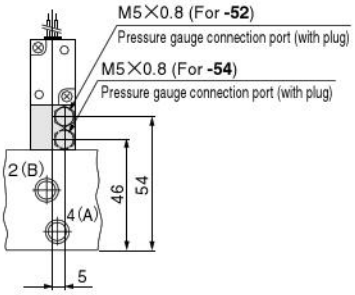

A180E1-25
A180-4E□-25
A183-4E2-25

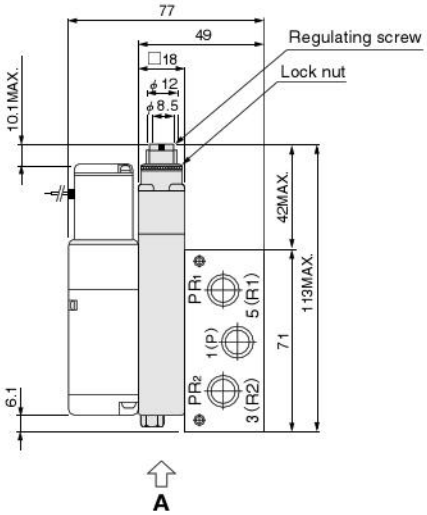

〈Viewed from A〉

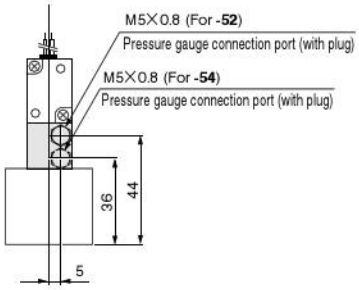

Handling Instructions and Precautions

Application example

- 1(P) port pressure regulating type: **-52**
  Regulates the 4(A) and 2(B) port pressure to the same pressure

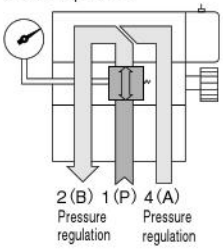

- 2(B) port pressure regulating type: **-54**
  Regulates the 2(B) port pressure

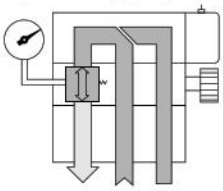

- 2(B) port pressure regulating type: **-54**
  Regulates the 4(A) port pressure

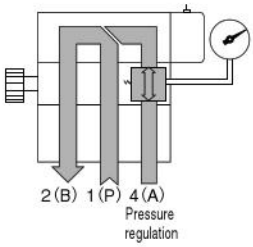

When the 2(B) port pressure regulating type (order code: **-54**) is used to regulate the 4(A) port pressure, mount it so that the regulating screw is on the 3(R2) side of the manifold base.

Mounting

1. Always thoroughly blow off (use compressed air) the tubing before piping. Entering metal chips, sealing tape, rust, etc., generated during piping work could result in air leaks or other defective operation.
2. Mount the sub-base regulator between the manifold base and the valve. In the standard configuration, the sub-base regulator's pressure regulating screw is to be mounted on the manifold base's 5(R1) port side. In the 2(B) port pressure regulating type, however, the pressure regulating screw can be mounted on the manifold base's 3(R2) port side to regulate the 4(A) port pressure, as well. For mounting direction and function, see the application examples.

Caution: When the sub-base regulator is being newly mounted, or when the pressure regulating port is being changed, caution should be exercised to the sub-base regulator direction and front and rear facing. In the 1(P) port pressure regulating type: **-52**, the pressure regulating screw is on the 5(R1) side, and the pressure gauge connection port is on the valve side. In the 2(B) port pressure regulating type: **-54**, the pressure regulating screw for 2(B) port pressure regulation is on the 5(R1) side, and for 4(A) port pressure regulation, it is on the 3(R2) side. In both cases, the pressure gauge connection port is on the manifold side.

Pressure regulation

1. Check the pressure setting by connecting a pressure gauge.
   The pressure display sight glass will show the scale for the setting pressure as a guide.
2. Once the pressure is set, tighten the lock nut to lock in place.

Air-piloted valves 180 series

●The optimum air valve for master valves or pilot valves for total pneumatic control.

Specifications

Item / Basic model		For direct piping, F type manifold		For sub-base, A type, AJ type manifolds	
		Single pilot	Double pilot	Single pilot	Double pilot
		180-4A	**180-4A2**	**A180-4A**	**A180-4A2**
Media		Air			
Operation type		Air piloted type			
Number of positions and ports		2 positions, 5 ports			
Effective area〔Cv〕mm²		10.2〔0.567〕Note 1			
Port size	Main	Rc1/8 Note 2		—— Note 2	
	Pilot	Rc1/8			
Lubrication		Not required			
Operating pressure range MPa {kgf/cm²} [psi.]	Main	0.15～0.7 {1.5～7.1} [22～102]	0～0.7 {0～7.1} [0～102]	0.15～0.7 {1.5～7.1} [22～102]	0～0.7 {0～7.1} [0～102]
	Pilot	See the table "Minimum Pilot Pressure"			
Proof pressure MPa {kgf/cm²} [psi.]		1.05 {10.7} [152]			
Operating temperature range (atmosphere and media) °C[°F]		5～50 [41～122]			
Shock resistance m/s² {G}		1373.0 {140.0} (Axial direction 294.2 {30.0})			
Mounting direction		Any			
Maximum operating frequency Hz		5			
Mass g [oz.]		70 [2.47]	80 [2.82]	80 [2.82] (240 [8.47]) Note 3	90 [3.17] (250 [8.82]) Note 3

Notes: 1. For details, see the effective area.
2. For details, see the port size.
3. Values in parentheses ( ) are the mass with sub-plate: **-25**.

※For optional specifications and order codes, see p.339～340.

Effective Area

mm²〔Cv〕

Specifications / Basic model		For direct piping, F type manifold	For sub-base, A type, AJ type manifolds
		180-4A, 180-4A2	**A180-4A, A180-4A2**
Single valve		10.2〔0.57〕	8.2〔0.46〕
Built-in quick fitting for φ4 tube	-J42 4(A), 2(B) ports with fittings	4.4〔0.24〕	4.4〔0.24〕 When mounted on the AJ type manifold with -J4 specification
	-J43 1(P), 4(A), 2(B) ports with fittings		——
Built-in quick fitting for φ6 tube	-J62 4(A), 2(B) ports with fittings	9.6〔0.53〕	7.9〔0.44〕 When mounted on the AJ type manifold with -J6 specification
	-J63 1(P), 4(A), 2(B) ports with fittings		——
Remarks		●Attaching TS6-01 to the 1(P), 4(A), 2(B) ports gives the value 9.2〔0.51〕. ●On the F type manifold, attaching TS4-01 to the 4(A), 2(B) ports gives the value 4.1 [0.23], and attaching TS6-01 gives the value 9.2〔0.51〕.	●Attaching TS6-02 to the 1(P), 4(A), 2(B) ports on the sub-base (-25) gives the value 7.5〔0.42〕.

Port Size

Specifications / Port		Basic model: For direct piping, F type manifold: 180-4A, 180-4A2	Basic model: For sub-base, A type, AJ type manifolds: A180-4A, A180-4A2	Remarks
Female thread	1(P)	Rc1/8	—	Standard
	4(A), 2(B)			
	3(R2), 5(R1)			
Built-in quick fitting	-J42 1(P)	Rc1/8	—	●Straight type ●For φ4 tube ●For both nylon tubes and urethane tubes
	-J42 4(A), 2(B)	Built-in quick fitting		
	-J42 3(R2), 5(R1)	Rc1/8		
	-J43 1(P)	Built-in quick fitting		
	-J43 4(A), 2(B)			
	-J43 3(R2), 5(R1)	Rc1/8		
	-J62 1(P)	Rc1/8	—	●Straight type ●For φ6 tube ●For both nylon tubes and urethane tubes
	-J62 4(A), 2(B)	Built-in quick fitting		
	-J62 3(R2), 5(R1)	Rc1/8		
	-J63 1(P)	Built-in quick fitting		
	-J63 4(A), 2(B)			
	-J63 3(R2), 5(R1)	Rc1/8		

Specifications / Port		Basic model: For direct piping, F type manifold: 180-4A, 180-4A2	Basic model: For sub-base, A type, AJ type manifolds: A180-4A, A180-4A2	Remarks
Sub-base -25	1(P)	—	Rc1/4	● All ports sub-base piping
	4(A), 2(B)			
	3(R2), 5(R1)			
F type manifold	1(P)	Rc1/4	—	● 1(P), 3(R2), 5(R1) manifold, 4(A), 2(B) valve piping
	4(A), 2(B)	Rc1/8 or quick fitting		
	3(R2), 5(R1)	Rc1/4		
A type manifold	1(P)	—	Rc1/4	● All ports manifold piping
	4(A), 2(B)		Rc1/8	
	3(R2), 5(R1)		Rc1/4	
AJ type manifold	1(P)	—	Rc1/4	● All ports manifold piping ● 4(A), 2(B) ports -J4: For φ4 tube -J6: For φ6 tube
	4(A), -J4		Built-in quick fitting	
	2(B) -J6		Built-in quick fitting	
	3(R2), 5(R1)		Rc1/4	

Manifold Specifications and Port Size

Manifold model	Specifications	Port		Port size
F type	1(P), 3(R2), 5(R1) manifold piping 4(A), 2(B) valve piping	1(P)		Rc1/4
		4(A), 2(B)		Rc1/8 or quick fitting (valve order code for φ4: -J 42, for φ6: -J62)
		3(R2), 5(R1)		Rc1/4
A type	All ports manifold piping	1(P)		Rc1/4
		4(A), 2(B)		Rc1/8
		3(R2), 5(R1)		Rc1/4
AJ type	4(A), 2(B) ports built-in quick fitting All ports manifold piping	1(P)		Rc1/4
		4(A),	-J4	Quick fitting for φ4 tube
		2(B)	-J6	Quick fitting for φ6 tube
		3(R2), 5(R1)		Rc1/4

※For optional specifications and order codes, see p.340.

Manifold Mass

g [oz.]

Manifold model		Mass calculation of each unit (n=number of units)	Mounting valve 180-4A	180-4A2	A180-4A	A180-4A2
F type		(42Xn)+40 [(1.48Xn)+1.41]	70 [2.47]	80 [2.82]	—	—
A type		(120Xn)+120 [(4.23Xn)+4.23]	—	—	120 [4.23]	170 [6.00]
AJ type	-J4	(135Xn)+120 [(4.76Xn)+4.23]				
	-J6	(138Xn)+120 [(4.87Xn)+4.23]				

Calculation example: The mass of 180M 10F stn.1～5 180-4A, stn.6～10
180-4A2 becomes (42X10)+40+(110X5)+(90X5)=1310 g [46.21oz.]

Minimum Pilot Pressure

MPa {kgf/cm²} [psi.]

Model / Main pressure	0.15 {1.5} [22]	0.3 {3.0} [44]	0.5 {5.1} [73]	0.7 {7.1} [102]
180-4A	0.15 {1.5} [22]	0.25 {2.5} [36]	0.34 {3.5} [49]	0.45 {4.5} [65]
180-4A2	0.08 {0.8} [12]	0.10 {1.0} [15]	0.12 {1.2} [17]	0.14 {1.4} [20]

Time Required for Switching

s

Model	Operation	Pilot line length L m [ft.] 2 [6.6]	6 [19.7]	10 [32.8]	20 [65.6]	50 [163.9]	100 [327.9]
180-4A	ON	0.07	0.18	0.32	0.65	2.10	5.80
	OFF	0.15	0.42	0.72	1.50	4.32	12.20
180-4A2	ON	0.09	0.23	0.40	0.83	2.73	7.00
	OFF						

Model	Measurement circuit	Measurement conditions
180-4A	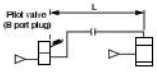	● Pilot valve=050-4E1 (effective area1.2mm²〔Cv: 0.067〕) ● Tube inner diameter=4mm [0.16in.] ● Air pressure (both main and pilot) =0.5MPa [73psi.]
180-4A2	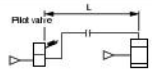	

Cylinder Operating Speed and Flow Rate

180-4A

●Measurement conditions

- ●Air pressure: 0.5MPa {5.1kgf/cm²} [73psi.]
- ●Piping inner diameter and length: φ6 [0.24in.]×1000mm [39in.]
- ●Fitting: Quick fitting TS8-01
- ●Load ratio= $\frac{\text{Load}}{\text{Cylinder theoretical thrust}}$ (%)
- ●Cylinder stroke: 150mm [5.91in.]

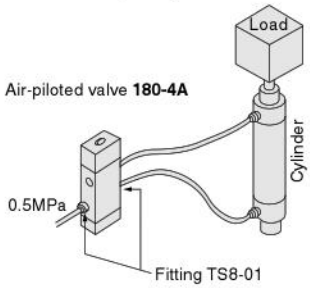

Maximum operating speed

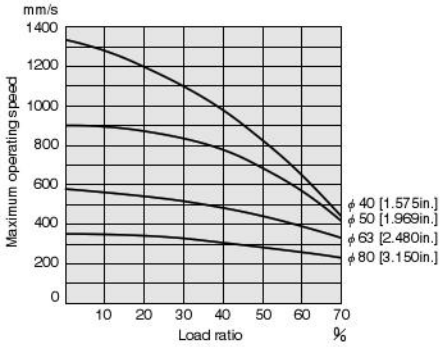

1mm/s = 0.0394in./sec.

A180-4A-25

●Measurement conditions

- ●Air pressure: 0.5MPa {5.1kgf/cm²} [73psi.]
- ●Piping inner diameter and length: φ6 [0.24in.]×1000mm [39in.]
- ●Fitting: Quick fitting TS8-02
- ●Load ratio= $\frac{\text{Load}}{\text{Cylinder theoretical thrust}}$ (%)
- ●Cylinder stroke: 150mm [5.91in.]

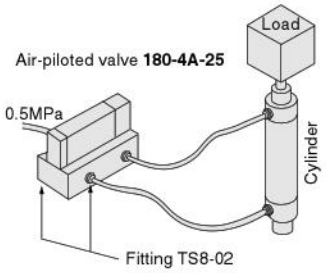

Maximum operating speed

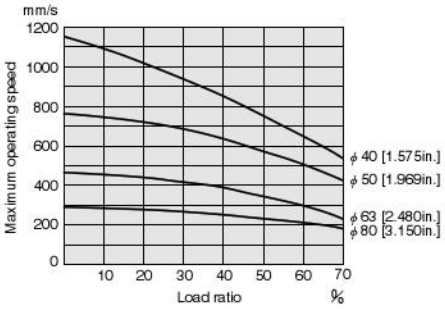

1mm/s = 0.0394in./sec.

Flow rate 180 series

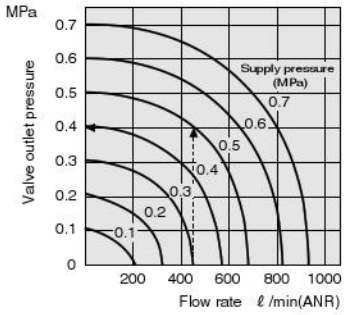

1MPa = 145psi., 1ℓ/min = 0.0353ft³/min.

How to read the graph

When the supply pressure is 0.5MPa [73psi.] and the flow rate is 460ℓ/min [16.2ft³/min.] (ANR), the valve outlet pressure becomes 0.4MPa [58psi.].

Operating Principles, and Major Parts and Materials

5-port, 2-position

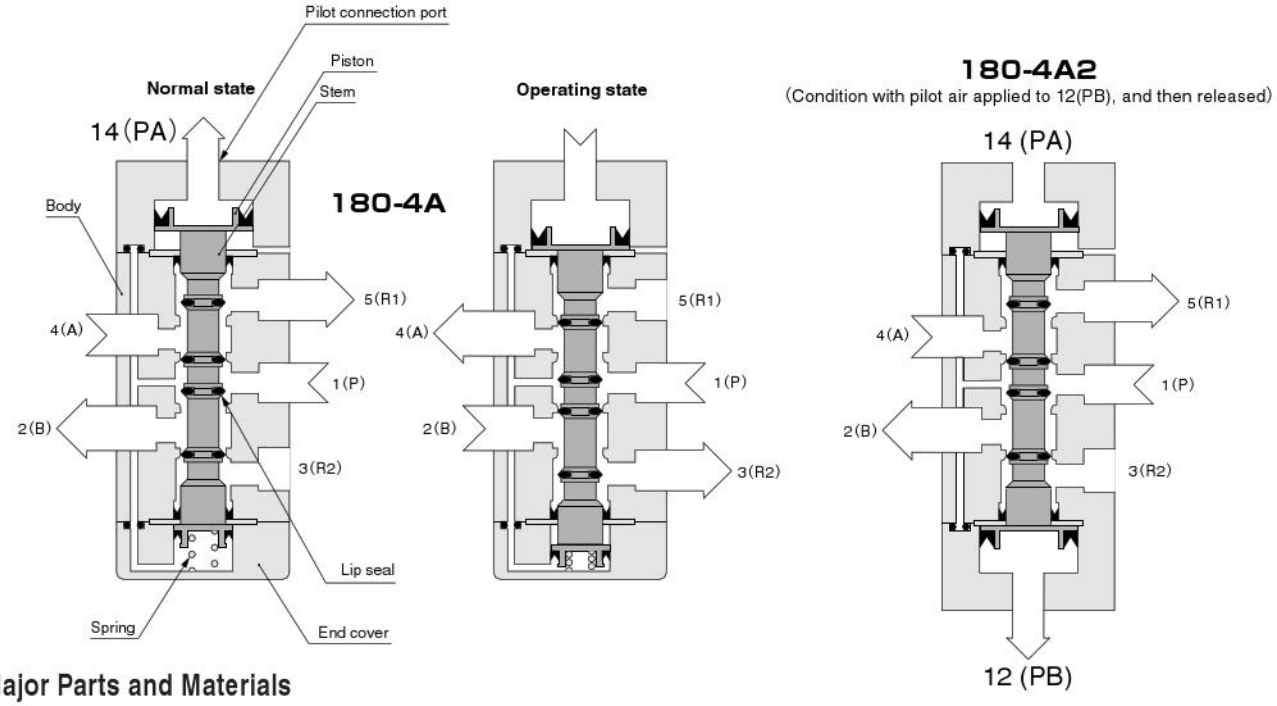

Major Parts and Materials

Parts	Materials
Body	Aluminum alloy (anodized)
Stem	
Lip seal	Synthetic rubber
Mounting base	Mild steel (zinc plated)
Sub-base	Aluminum alloy (anodized)

Dimensions of Air-piloted 5-port, 2-position Valve (mm)

180-4A

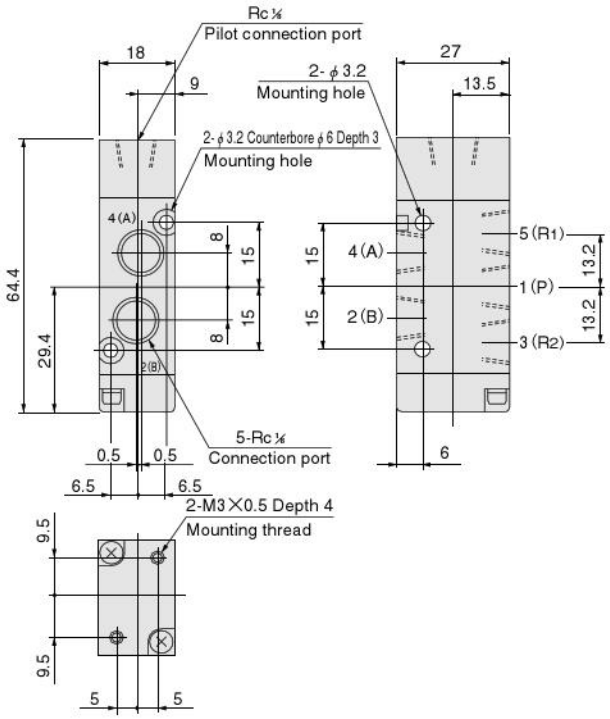

180-4A2

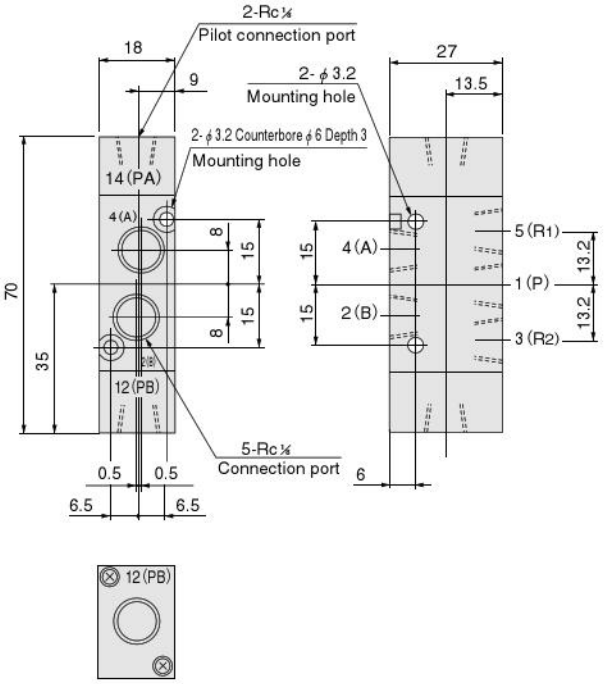

Options

●Mounting base: **-21**

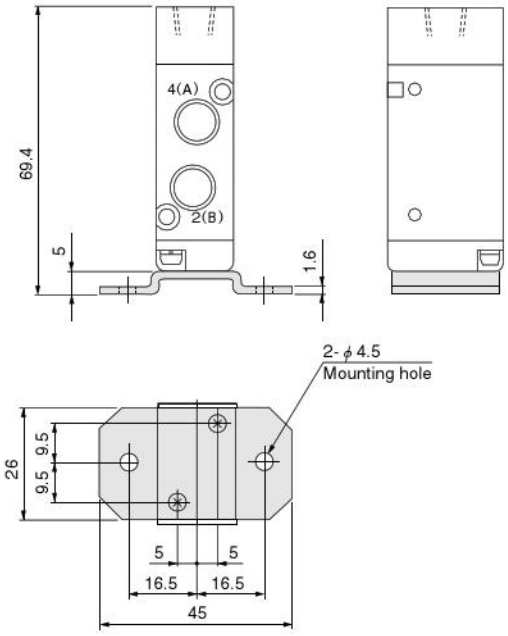

●With quick fittings: **-J42** (For φ4 tube, 4(A), 2(B) ports with fittings)
-J43 (For φ4 tube, 1(P), 4(A), 2(B) ports with fittings)
-J62 (For φ6 tube, 4(A), 2(B) ports with fittings)
-J63 (For φ6 tube, 1(P), 4(A), 2(B) ports with fittings)

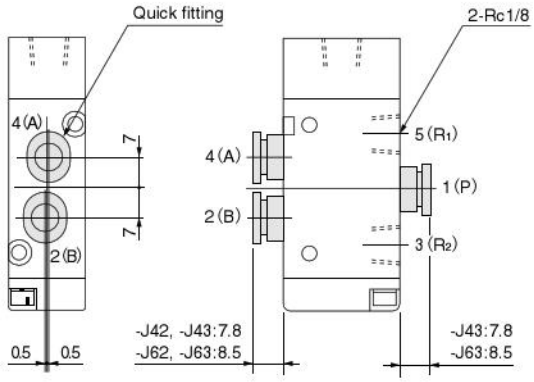

●Speed controller: **-70**

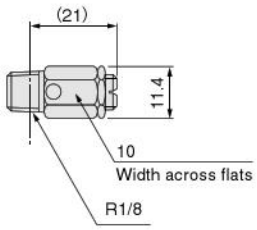

●Muffler: **-75**

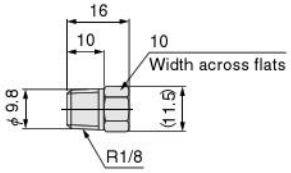

Dimensions of Air-piloted 5-port, 2-position Valve (mm)

A180-4A

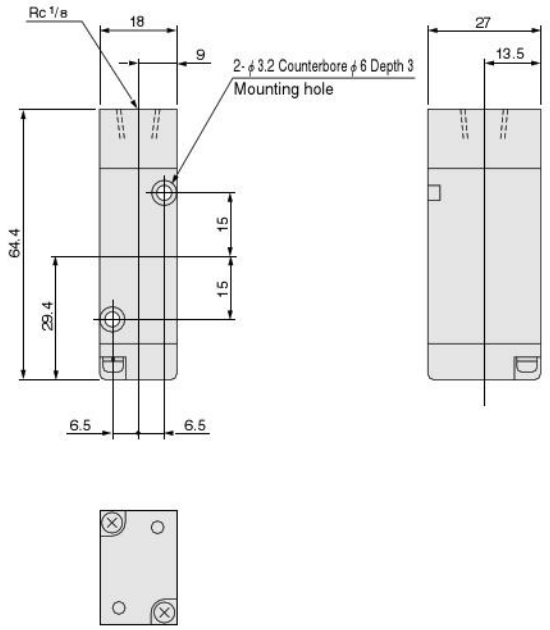

A180-4A2

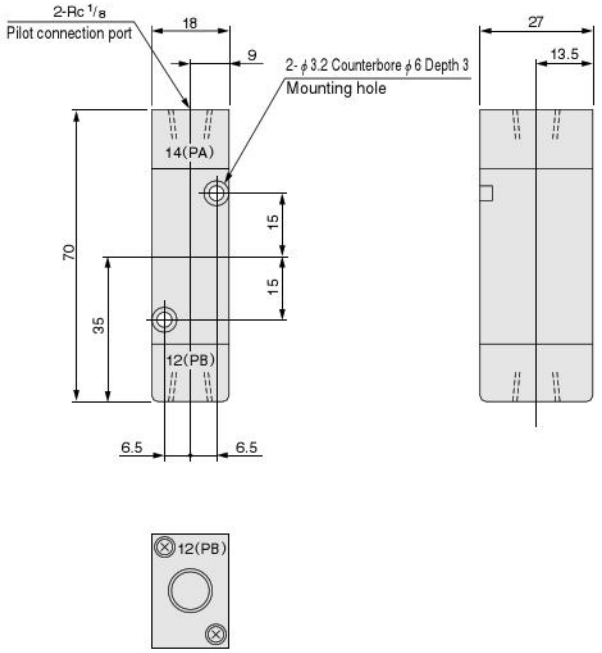

Options

●Sub-base: **-25**

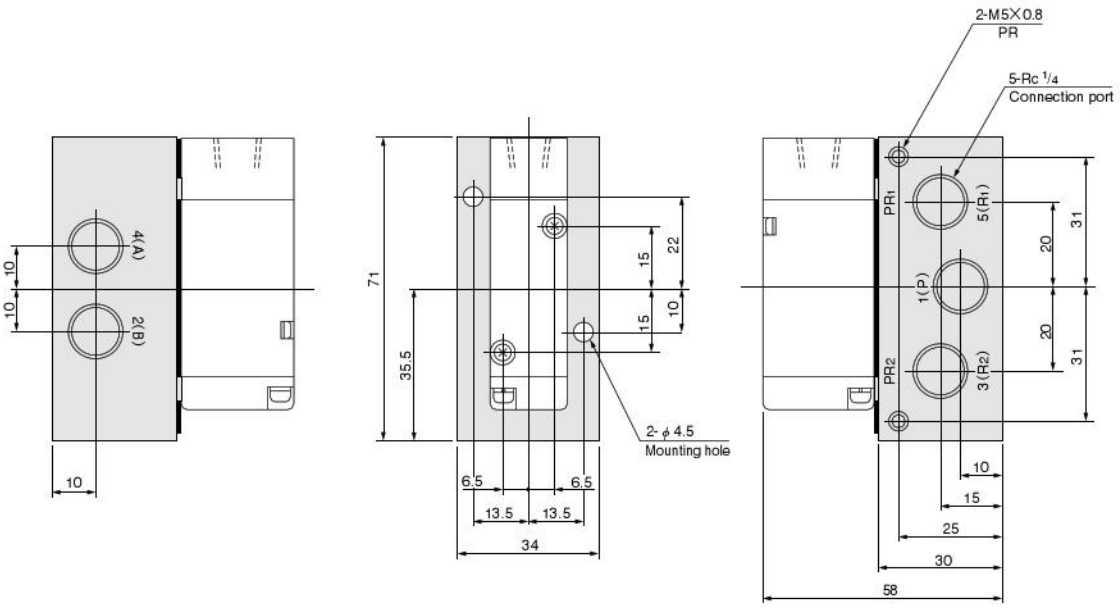

●Speed controller: **-70**
(for sub-base only)

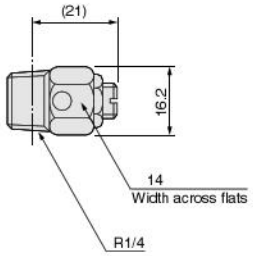

Solenoid

Internal circuit

●DC12V, DC24V

Standard solenoid (Surge suppression)

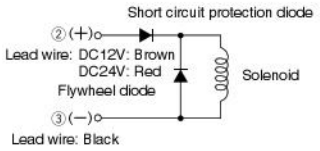

② and ③ are for with DIN connector (Order code: -39).

Solenoid with LED indicator (Surge suppression)
Order code: -PSL, -PLL

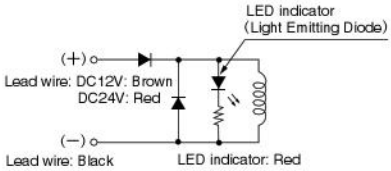

●AC100V, AC200V

Standard solenoid (Surge suppression)

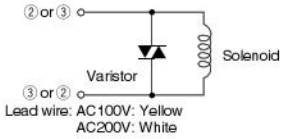

② and ③ are for with DIN connector (Order code: -39).

Solenoid with LED indicator (Surge suppression)
Order code: -PSL, -PLL

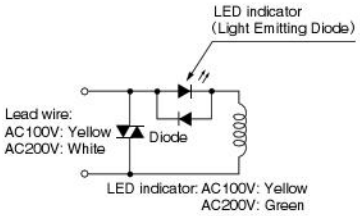

●DC24V

Tandem solenoid

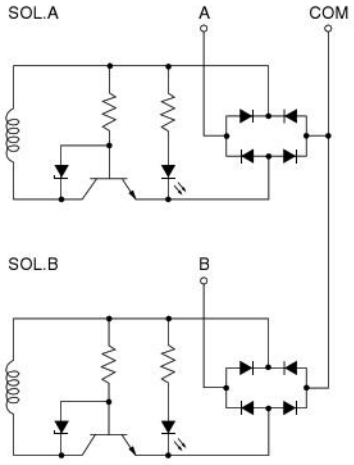

Cautions: 1. Do not apply megger between the lead wires.
2. The DC solenoid will not short circuit even if the wrong polarity is applied, but the valve will not operate.
3. Leakage current inside the circuit could result in failure of the solenoid valve to return, or in other erratic operation. Always use it within the range of the allowable leakage current. If circuit conditions, etc. cause the leakage current to exceed the allowable leakage current, consult us.
4. For double solenoid and twin solenoid, avoid energizing both solenoids simultaneously. The valve could fall into the neutral position.

Plug connector

Attaching and removing plug connector

Use fingers to insert the connector into the pin, push it in until the lever claw latches onto the protruded section of the connector housing, and complete the connection.
To remove the connector, squeeze the lever along with the connector, lift the lever claw up from the protruded section of the connector housing, and pull it out.

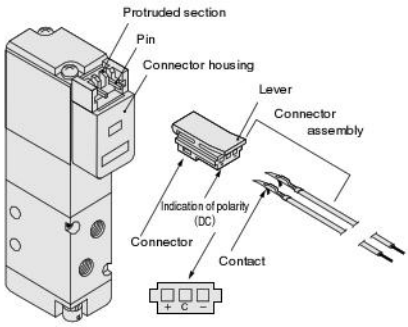

※Illustration shows the 110 series.

Crimping of connecting lead wire and contact

To crimp lead wires into contacts, strip off 4mm [0.16in.] of the insulation from the end of the lead wire, insert it into the contact, and crimp it. Be sure to avoid catching the insulation on the exposed wire crimping section.

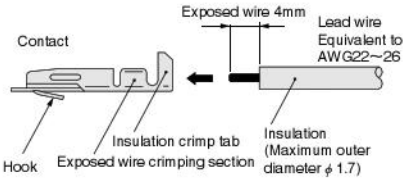

Cautions: 1. Do not pull hard on the lead wire.
2. Always use a dedicated tool for crimping of connecting lead wire and contact.

Contact: Model 702062-2M
Manufactured by Sumiko Tech, Inc.

Crimping tool: Model F1-702062
Manufactured by Sumiko Tech, Inc.

Attaching and removing contact and connector

Insert the contact with lead wire into a plug connector □ hole until the contact hook latches on the connector and is secured to the plug connector. Confirm that the lead wire cannot be easily pulled out.
To remove it, insert a tool with a fine tip (such as a small screwdriver) into the rectangular hole on the side of the plug connector to push up on the hook, and then pull out the lead wire.

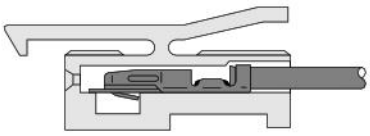

Cautions: 1. Do not pull hard on the lead wire. It could result in defective contacts, breaking wires, etc.
2. If the pin is bent, use a small screwdriver, etc. to gently straighten out the pin, and then complete the connection to the plug connector.

Common terminal pre-wired plug connector

1. Pre-wired common terminal at DC positive side or AC
Order code With straight connector: -CPSL
With L connector: -CPLL

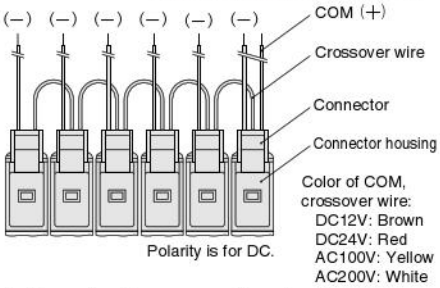

2. Pre-wired common terminal at DC negative side
Order code With straight connector: -CMSL
With L connector: -CMLL

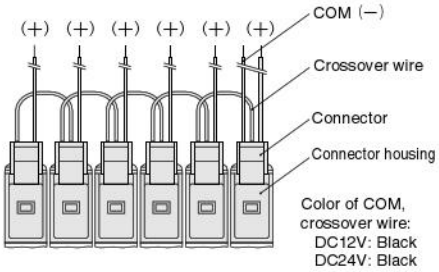

Cautions: 1. The diagrams show the straight connector configuration.
While the connector's orientation is different in the case of the L connector, in every case the first COM lead wire comes from the last station's mounted valve.
2. Since the COM terminal is connected to a crossover terminal inside the connector housing, the connector cannot be switched between a positive common and a negative common by changing the connectors.

Manual override

Non-locking type

To operate the manual override, press it all the way down. The single solenoid valve works the same as when in the energized state as long as the manual override is pushed down, and returns to the normal position upon release.
For the double solenoid and twin solenoid valves, pressing the manual override on the 12(S1) side switches the 12(S1) to enter the energized position, and the unit remains in that state even after the manual override is released. To return it to the normal position, operate the manual override on the 14(S2) side. This is the same for the solenoid 14(S2).

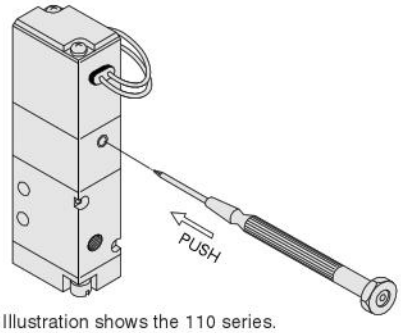

※Illustration shows the 110 series.

Locking protruding type

Use a small screwdriver to turn the adjusting knob several times in the clockwise direction, and lock the manual override in place. When locked, turning the adjusting knob several times in the counterclockwise direction releases a spring on the manual override, returns it to the normal position, and releases the lock.
For the locking protruding type, when the adjusting knob is not turned, this type acts just like the non-locking type; the valve enters the energized position as long as the manual override is pushed down, and it returns to the normal position upon release.

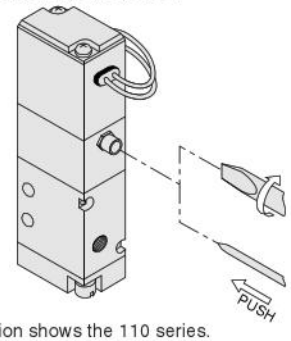

※Illustration shows the 110 series.

Cautions:
1. The 180 series valves are internal pilot type solenoid valves. As a result, the manual override cannot switch the main valve without air supplied from the 1(P) port.
2. Always release the lock of the locking type and locking protruding type manual override before commencing normal operation.
3. Do not attempt to operate the manual override with a pin or other object having an extremely fine tip. It could damage the manual override button.
4. Do not turn the adjusting knob more than needed. It could result in defective operation.

Manual override (Tandem solenoid)

Locking type

To lock the locking type manual override, use a small screwdriver to push down the manual override all the way, then set the 0 position as the reference point and turn it in the clockwise direction as far as position A. This achieves the same conditions as when the 14(SA) side is energized, and the manual override is locked in place. For the 12(SB) side, turn it in the counterclockwise direction as far as position B. To release the lock, return the manual override to the 0 position. A spring mechanism returns the manual override to its normal position, and the lock is released. Care should be taken to avoid excessive turning of the manual override, which could damage it.

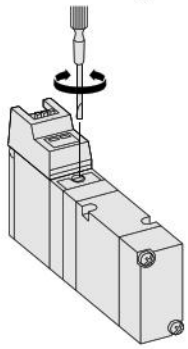

Locking protruding type, locking manual lever type

To lock the locking protruding type manual override or locking manual lever type, use either a small screwdriver or your fingertips to push the manual override button (manual lever) all the way down, then set the 0 position as the reference point and turn it in the clockwise direction as far as position A. This achieves the same conditions as when the 14(SA) side is energized, and the manual override button (manual lever) is locked in place. For the 12(SB) side, turn it in the counterclockwise direction as far as position B. To release the lock, return the manual override button (manual lever) to the 0 position. A spring mechanism returns the manual override button (manual lever) to its normal position, and the lock is released. Care should be taken to avoid excessive turning of the manual override button (manual lever), which could damage it.

Locking protruding type manual override

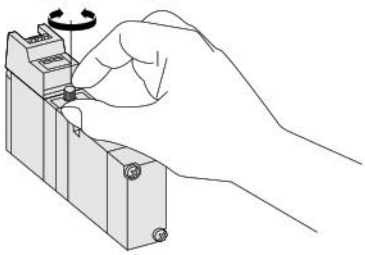

Locking manual lever type

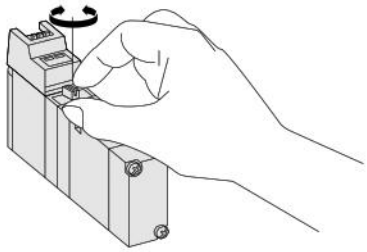

Cautions:
1. The 180 series valves are internal pilot type solenoid valves. As a result, the manual override cannot switch the main valve without air supplied from the 1(P) port.
2. Always release the lock of the locking protruding type manual override before commencing normal operation.
3. Do not attempt to operate the manual override with a pin or other object having an extremely fine tip. It could damage the manual override button.

Mounting base 180-21

When installing a mounting base to the valve, always use the provided screws. The recommended tightening torque for the screws is 49N·cm {5kgf·cm} [4.3in·lbf]. If you must use screws other than the provided ones, use screws with a screw length of 6mm [0.24in.] or less. Avoid applying excessive force or shocks.

Mounting valves on manifold

When mounting valves on manifold, apply the recommended tightening torque of 49N·cm {5kgf·cm} [4.3in·lbf] for the valve mounting screws.