CAD drawing data catalog is available.

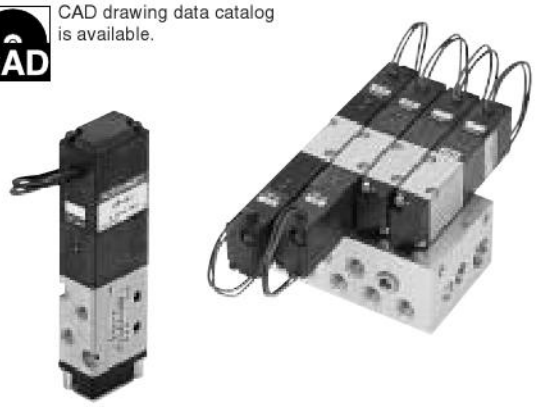

KOGANEI

VALVES GENERAL CATALOG

SOLENOID VALVES 110 SERIES

INDEX

Features — 293
Basic Models and Configuration — 295
110 Series
- Specifications — 297
- Cylinder Operating Speed and Flow Rate — 299
- Tandem Solenoid Valve Order Codes — 300
- Solenoid Valve, Air-piloted Valve Order Codes — 301
- Manifold Order Codes — 302
- Operating Principles and Symbols, Major Parts and Materials — 303
- Dimensions of Solenoid Valve — 304
- Dimensions of Manifold — 309
- Made to Order — 315
  - Plug Connector
  - DIN Connector
  - LED Indicator
  - Built-in Interface Unit
  - Air-piloted Valves 110 Series
- Handling Instructions and Precautions — 321

PC Board Manifold 110 Series
- Specifications — 323
- Order Codes — 324
- Dimensions — 325
- Handling Instructions and Precautions — 328

⚠ **Caution** **Before use, be sure to read the "Safety Precautions" on p. 31.**

Reliability & Versatile Applications

SOLENOID VALVES 110 SERIES

The 110 series Solenoid Valves, which achieve highly reliable, powerful, and low current basic performance in a compact, thin body, offer a simple and flexible standard type, and a full-option type with advanced maintenance features, to become still more user-friendly.

Standard type

Its clean lines emphasize basic performance, for low-cost and versatile applications.

●With a varistor for the AC type, and a flywheel diode for the DC type, the solenoid is equipped with excellent surge suppression measures.

●A manual override (non-locking type) is standard equipment and offers easy adjustment during assembly and maintenance. A fingertip-operable protruding-type manual override (locking type) is also available as an option.

●Equipped with an easy-to-handle plug connector for fast wiring installation and removal. Available in a straight type and L type, both are equipped with LED indicators for easy confirmation of operations.

●Built-in quick fittings offer one-touch simple tube installation and removal. Moreover, an effective area of 4.0mm² (Cv: 0.22) enables even more powerful applications.

Full-option type

Greatly improves piping and wiring work efficiency, for excellent applications in assembly, adjustment, and maintenance.

F type manifold

Direct piping type valves can be mounted directly on this manifold. An FE type manifold enabling collected pilot exhaust through its PR port is also available.

●The common terminal pre-wired plug connector type frees technicians from tedious common terminal wiring work. Crossover wires are used to connect the common terminals, so that a single common wire is sufficient even for a manifold with many stations.

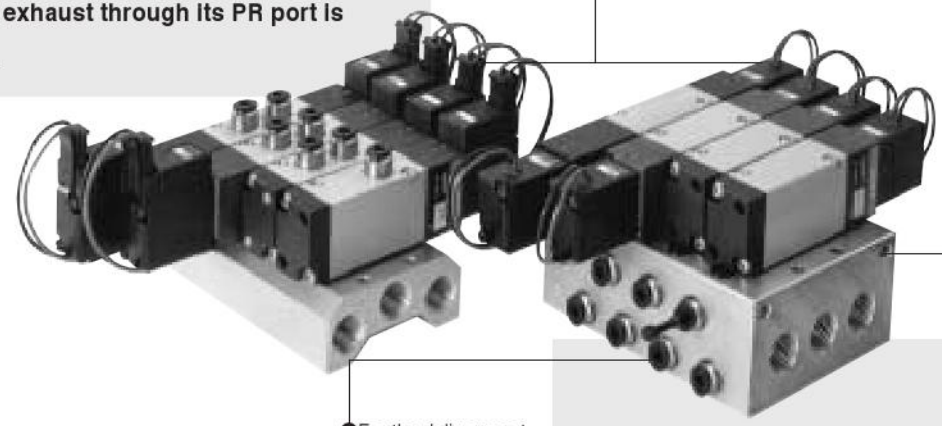

●For the delivery port quick fittings, select from ϕ4 or ϕ6 fittings for each station in accordance with actuator size.

AJ type manifold

Combines all ports into a manifold base. Quick fittings are built into the delivery ports (4(A), 2(B)), allowing easy assembly and maintenance in a confined space.

●Piping to the pilot exhaust ports is also possible to keep the control box interior and working environment from becoming contaminated. The built-in check mechanism prevents exhaust interference.

Twin Solenoid Valve

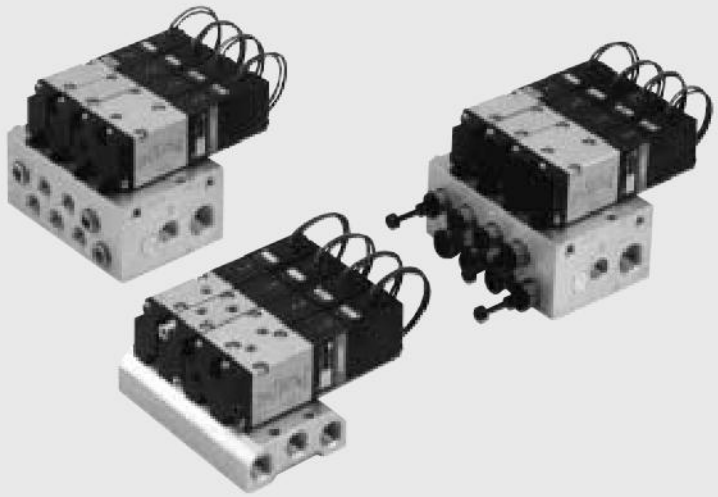

Ensures the functions of the conventional double solenoid type, but in a much shorter length, while simple wiring enables correct connections with a sequencer. Moreover, it is capable of being installed on a conventional manifold to occupy space for two stations.

Tandem Solenoid Valve

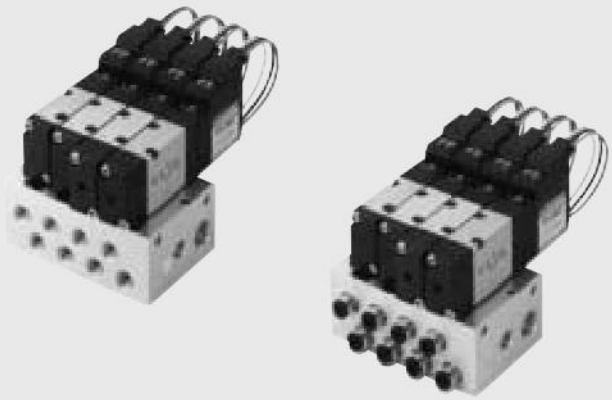

Retains the performance specifications of the 110 series while realizing a two-unit combination solenoid in the space of a single station. Achieves a compact outer appearance for the manifold and still more space savings.

PC Board Manifold 110 Series

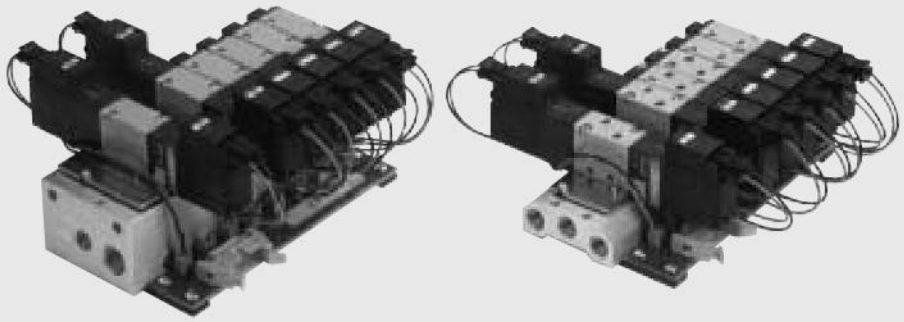

Secures ease of use by using a printed circuit board with a connector for quick wiring connection to control devices. This simplified wiring method greatly reduces wiring work and the need for tools.

Single unit

	2-, 3-port	5-port
Direct piping	Normally closed (NC) / Normally open (NO)	2-position: Single solenoid, Double solenoid; 3-position: Closed center, Exhaust center, Pressure center
Sub-base piping	Normally closed (NC) / Normally open (NO)	2-position / 3-position

Direct piping

Normally closed (NC)

111E1 (□110E1)[Note 1]

Normally open (NO)

111E1-11 (□110E1-11)[Note 1]

2-position

Single solenoid

110-4E1

Double solenoid

110-4E2 (□110-4KE2)[Note 2]

3-position

Closed center

113-4E2 (□113-4KE2)[Note 2]

Exhaust center

113-4E2-13 (□113-4KE2-13)[Note 2]

Pressure center

113-4E2-14 (□113-4KE2-14)[Note 2]

Sub-base piping

Normally closed (NC)

A111E1-25

Normally open (NO)

A111E1-11-25

2-position

Single solenoid

A110-4E1-25

Double solenoid

A110-4E2-25

3-position

Closed center

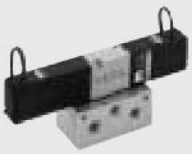

A113-4E2-25

Exhaust center

A113-4E2-13-25

Pressure center

A113-4E2-14-25

2-position (tandem solenoid)

Double solenoid

A110-4ME2

3-position (tandem solenoid)

Closed center

A113-4ME2

Exhaust center

A113-4ME2-13

Pressure center

A113-4ME2-14

Notes: 1. 110E1 and A110E1 are dedicated valves for manifolds with combination mounting of 2-, 3-, 5-port valves. They cannot be used as single units. For single unit applications, use 111E1 or A111E1-25.
2. They are dedicated twin solenoid valves for manifolds with combination mounting of 2-, 3-, 5-port valves. They cannot be used as single units.

Manifold

Small sized manifold for 2-, 3-port valves

111M□F—F type (1(P), 3(R)) manifold

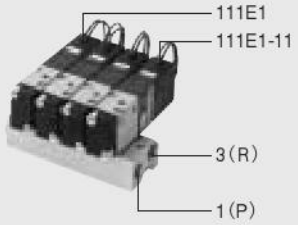

111M□A—A type (all ports) manifold

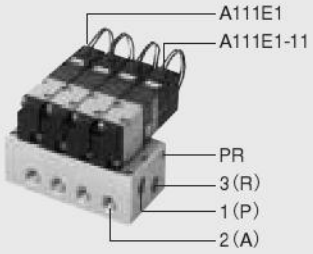

111M□AJ—AJ type (all ports, with quick fittings) manifold

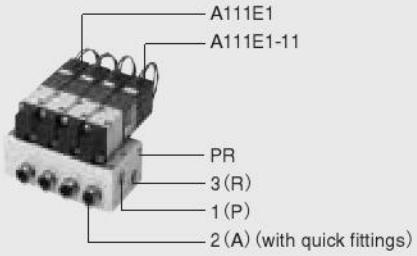

Manifold for combination mounting of 2-, 3-, 5-port valves

110M□F—F type (1(P), 3(R2), 5(R1)) manifold

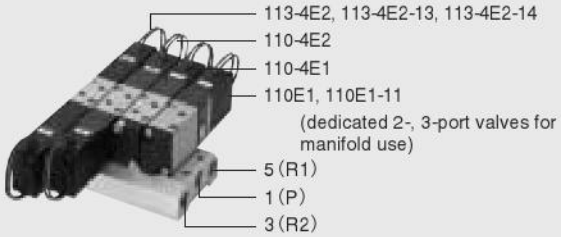

110M□FE Note—FE type (1(P), 3(R2), 5(R1), PR) manifold

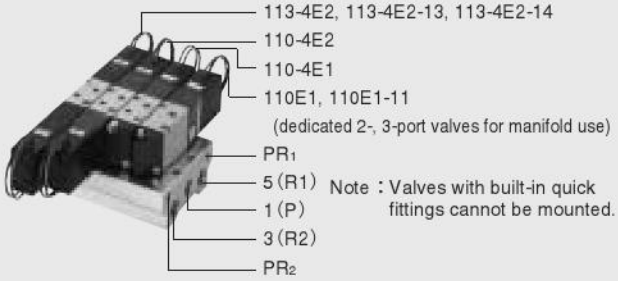

Note : Valves with built-in quick fittings cannot be mounted.

110M□A—A type (all ports) manifold

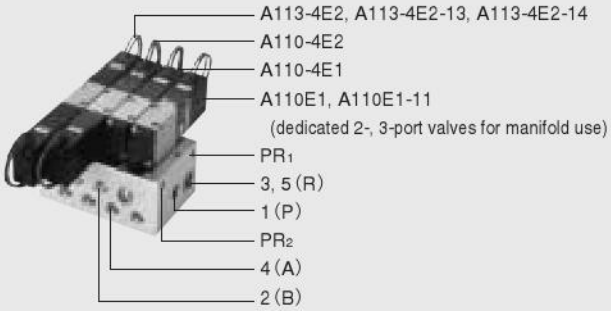

110M□AJ—AJ type (all ports, with quick fittings) manifold

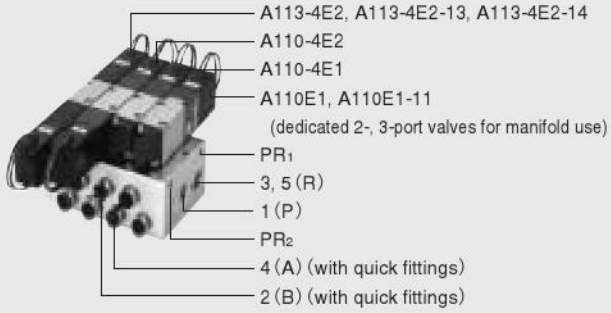

Basic Models and Valve Functions

Basic model / Item						
	Direct piping, F, FE type manifolds	**111E1 (110E1[Note])**	**110-4E1 110-4E2**	**110-4KE2[Note]**	**113-4E2**	**113-4KE2**
	Sub-base piping, A, AJ type manifolds	**A111E1 (A110E1[Note])**	**A110-4E1 A110-4E2 A110-4ME2**	**A110-4KE2[Note]**	**A113-4E2 A113-4ME2**	**A113-4KE2**
Number of positions		2 positions			3 positions	
Number of ports		2, 3 ports	5 ports			
Valve function		Normally closed (NC, standard) or Normally open (NO, optional)	Single solenoid, Double solenoid or Tandem solenoid	Twin solenoid	Closed center (standard), Exhaust center (optional), Pressure center (optional) or Tandem solenoid	Closed center (standard), Exhaust center (optional), Pressure center (optional) or Twin solenoid

Remark : For optional specifications and order codes, see p.300～302.

Note : The 110E1, A110E1, 110-4KE2, and A110-4KE2 are dedicated valves for manifolds with combination mounting of 2-, 3-, 5-port valves. They cannot be used as single units. When using 2-,3-port valves as single units, use 111E1 or A111E1-25.

Specifications

Basic model / Item								
	Direct piping, F, FE type manifolds	**111E1 (110E1)**	**110-4E1 110-4E2**	**110-4KE2**		**113-4E2**	**113-4KE2**	
	Sub-base piping, A, AJ type manifolds	**A111E1 (A110E1)**	**A110-4E1 A110-4E2**	**A110-4KE2**	**A110-4ME2**	**A113-4E2**	**A113-4KE2**	**A113-4ME2**
Media		Air						
Operation type		Internal pilot type						
Effective area〔Cv〕[Note1] mm²		4.2〔0.23〕			4.0〔0.22〕	3.8〔0.21〕		3.6〔0.2〕
Port size[Note2]		M5×0.8						
Lubrication		Not required						
Operating pressure range MPa {kgf/cm²} [psi.]		0.15～0.7 {1.5～7.1} [22～102]						
Proof pressure MPa {kgf/cm²} [psi.]		1.05 {10.7} [152]						
Response time[Note3] ms ON/OFF	DC12V, DC24V	15/25 or below	15/25〔20〕or below		15 or below	15/30 or below		
	AC100V, AC200V	15/15 or below	15/15〔15〕or below		—	15/20 or below		—
Maximum operating frequency Hz		5						
Minimum time to energize for self holding ms		—	50(□110-4E2)	50		—		
Operating temperature range (atmosphere and media) °C [°F]		5～50 [41～122]						
Shock resistance m/s² {G}		1373.0 {140.0} (Axial direction 294.2 {30.0})				294.2 {30.0}		
Mounting direction		Any						

Notes : 1. For details, see the effective area on p.298.
2. For details, see the port size on p.298.
3. Values when air pressure is 0.5MPa {5.1kgf/cm²} [73psi.]. Values in brackets 〔 〕for 110-4E2, 110-4KE2, and 110-4ME2 are when switching from the opposite position, while the values for 113-4E2, 113-4KE2, and A113-4ME2 are those of the closed center valve, when switching from the neutral position.

Solenoid Specifications

Item / Rated voltage		DC12V	DC24V	AC100V		AC200V		DC24V (Tandem solenoid)
Type		Flywheel diode incorporated for surge suppression		Shading type				Built-in surge absorption transistor
Operating voltage range V		10.8～13.2 (12±10%)	21.6～26.4 (24±10%)	90～132 (100^{+32}_{-10}%)		180～264 (200^{+32}_{-10}%)		21.6～26.4 (24±10%)
Current (when rated voltage is applied)	Frequency Hz	—	—	50	60	50	60	—
	Starting mA (r.m.s)	—	—	36	32	18	16	—
	Energizing mA (r.m.s)	130 (1.6W) (140 (1.7W) with LED indicator)	65 (1.6W) (75 (1.8W) with LED indicator)	24	20	12	10	50 (1.2W)
Allowable leakage current mA		8	4	4		2		2
Insulation resistance MΩ		Over 100						
Wiring type and lead wire length	Standard	Grommet type: 300mm [11.8in.]						Plug connector type: 300mm [11.8in.]
	Optional	Plug connector type: 300mm [11.8in.] Note: See made to order on p.315～316.						—
Color of lead wire		Brown (+) Black (−)	Red (+) Black (−)	Yellow		White		Red (SA), Black (COM) White (SB)
Color of LED indicator		Red		Yellow		Green		Red
Surge suppression (as standard)		Flywheel diode		Varistor				Surge absorption transistor

Effective Area〔Cv〕

mm² 〔Cv〕

Basic model	Standard (Single valve)	Built-in quick fittings	Remarks
111E1[Note] **(110E1) 110-4E1 110-4E2 110-4KE2**	4.2 〔0.23〕	-J4□ : 3.6 〔0.20〕 -J6□ : 4.0 〔0.22〕	●When attaching TS4-M5 to the 1(P), 4(A), 2(B) ports, the value is 1.8〔0.10〕. ●On the F type manifold, attaching TS4-M5 to the 4(A), 2(B) ports gives the value 2.1〔0.12〕. ●When large flow rates are required, we recommend the φ6 built-in quick fitting.
113-4E2 113-4KE2	3.8 〔0.21〕	-J4□ : 3.4 〔0.19〕 -J6□ : 3.6 〔0.20〕	
A111E1[Note] **(A110E1) A110-4E1 A110-4E2 A110-4KE2 A110-4ME2**	4.0 〔0.22〕	-J4□ : 3.6 〔0.20〕 -J6□ : 4.0 〔0.22〕	●When mounting on a sub-base or manifold. ●Attaching TS4-01 to the 1(P), 4(A), 2(B) ports on the sub-base gives the value 3.2 〔0.18〕.
A113-4E2 A113-4KE2 A113-4ME2	3.6 〔0.20〕	3.6 〔0.20〕	

Note: The delivery port is the 2(A) for 111E1, A111E1.

Solenoid Valve Port Size

Basic model	Port specification		Port size
111E1[Note1] **(110E1**[Note2]**)**	Standard	Female thread	M5×0.8
	Optional	-J41	Quick fitting for φ4, for 2(A) (4(A)) port only
		-J42	Quick fitting for φ4, for 1(P), 2(A) ports
		-J61	Quick fitting for φ6, for 2(A) (4(A)) port only
		-J62	Quick fitting for φ6, for1(P), 2(A) ports
110-4E1 110-4E2 110-4KE2 113-4E2 113-4KE2	Standard	Female thread	M5×0.8
	Optional	-J42	Quick fitting for φ4, for 4(A), 2(B) ports only
		-J43[Note 3]	Quick fitting for φ4, for 1(P), 4(A), 2(B) ports
		-J62	Quick fitting for φ6, for 4(A), 2(B) ports only
		-J43[Note 3]	Quick fitting for φ6, for 1(P), 4(A), 2(B) ports
A111E1-25[Note1] **A110-4E1-25 A110-4E2-25 A113-4E2-25 A110-4ME2-25 A113-4ME2-25**	1 (P)	Female thread	Rc1/8
	4 (A), 2 (B)		
	3 (R2), 5 (R1)		
	PR	Female thread	M5×0.8

Notes: 1. The delivery port is the 2(A) for 111E1, A111E1-25.
2. Since 110E1 is for manifold use only, piping to the 1 (P) port with a fitting is not possible.
3. Not available in 110-4E2, 113-4E2, 110-4KE2, and 113-4KE2.

Manifold Connection Port Size

Manifold model	Port	Location of piping ports	Port size
111M□F[Note1] **110M□F**	1 (P)	Manifold	Rc1/8
	4 (A), 2 (B)	Valve	M5×0.8 [Note2]
	3 (R), 3 (R2), 5 (R1)	Manifold	Rc1/8
110M□FE	1 (P)	Manifold	Rc1/8
	4 (A), 2 (B)	Valve	M5×0.8
	3 (R2), 5 (R1)	Manifold	Rc1/8
	PR		M5×0.8
111M□A[Note1] **110M□A**	1 (P)	Manifold	Rc1/8
	4 (A), 2 (B)		
	3 (R), 3, 5 (R)		Rc1/8 (111M□A), Rc1/4 (110M□A)
	PR		M5×0.8
111M□AJ[Note1] **110M□AJ**	1 (P)	Manifold	Rc1/8
	4 (A), 2 (B)		Quick fitting for φ4 or φ6
	3 (R), 3, 5 (R)		Rc1/8 (111M□AJ), Rc1/4 (110M□AJ)
	PR		M5×0.8

Notes: 1. The delivery port is the 2(A) for 111M□F, 111M□A, 111M□AJ.
2. When the mounting valve is a female thread specification, the ports are this size. For the built-in quick fitting types, quick fittings for φ4 or φ6 are installed.

Solenoid Valve Mass

g [oz.]

Basic model	Mass
111E1	75 [2.65]
(110E1)	80 [2.82]
110-4E1	80 [2.82]
110-4E2	125 [4.41]
110-4KE2	175 [6.17]
113-4E2	145 [5.11]
113-4KE2	165 [5.82]
A111E1	80 [2.82] (180 [6.35])
(A110E1)	85 [3.00]
A110-4E1	85 [3.00] (180 [6.35])
A110-4E2	130 [4.59] (225 [7.94])
A110-4KE2	180 [6.35]
A110-4ME2	110 [3.88] (205 [7.23])
A113-4E2	150 [5.29] (245 [8.64])
A113-4KE2	170 [6.00]
A113-4ME2	120 [4.23] (215 [7.58])

Remark: Figures in parentheses ( ) are the mass with sub-base:-25

Manifold Mass

g [oz.]

Manifold model	Mass calculation of each unit (n=number of units)		Block-off plate
111M□F	(15×n)+30	[(0.53×n)+1.06]	5 [0.18]
111M□A	(45×n)+45	[(1.59×n)+1.59]	10 [0.35]
111M□AJ	-J4 : (53×n)+45 -J6 : (50×n)+45	[(1.87×n)+1.59] [(1.76×n)+1.59]	
110M□F	(20×n)+30	[(0.71×n)+1.06]	6 [0.21]
110M□FE	(40×n)+50	[(1.41×n)+1.76]	11 [0.39]
110M□A	(60×n)+60	[(2.12×n)+2.12]	
110M□AJ	-J4 : (67×n)+60 -J6 : (64×n)+60	[(2.36×n)+2.12] [(2.26×n)+2.12]	

Cylinder Operating Speed

How to obtain cylinder speed

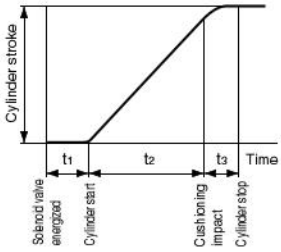

To obtain the time required for the cylinder to complete 1 stroke, add cylinder's delay time t_1 (time between energizing of solenoid valve and actual starting of the cylinder), to the cylinder's max. speed operating time t_2.
When a cushion is used, add the cushioning time t_3, to the above calculation. The standard cushioning time t_3 is approximately 0.2 seconds.

110-4E1
113-4E2

●Measurement conditions

- ●Air pressure : 0.5MPa {5.1kgf/cm²} [73psi.]
- ●Piping inner diameter and length : ϕ2.5 [0.10in.]×1000mm [39in.]
- ●Fitting : Quick fitting TS4-M5
- ●Load ratio = $\frac{\text{Load}}{\text{Cylinder theoretical thrust}}$ (%)
- ●Cylinder stroke : 150mm [5.91in.]

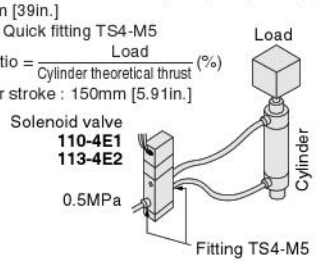

Maximum operating speed

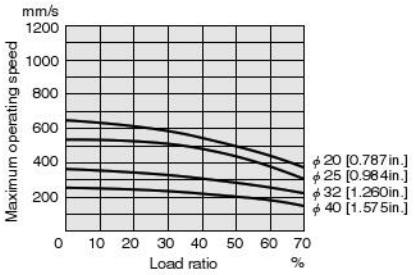

1mm/s = 0.0394in./sec.

Delay time

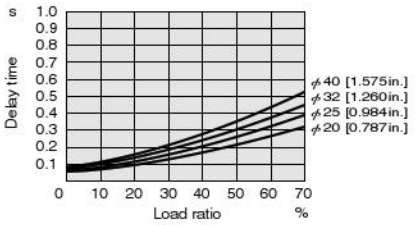

A110-4E1-25
A113-4E2-25

●Measurement conditions

- ●Air pressure : 0.5MPa {5.1kgf/cm²} [73psi.]
- ●Piping inner diameter and length : ϕ4 [0.16in.]×1000mm [39in.]
- ●Fitting : Quick fitting TS6-01
- ●Load ratio = $\frac{\text{Load}}{\text{Cylinder theoretical thrust}}$ (%)
- ●Cylinder stroke : 150mm [5.91in.]

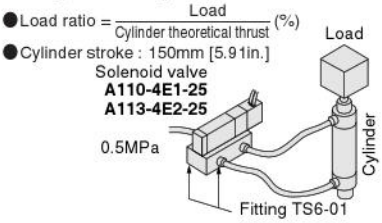

Maximum operating speed

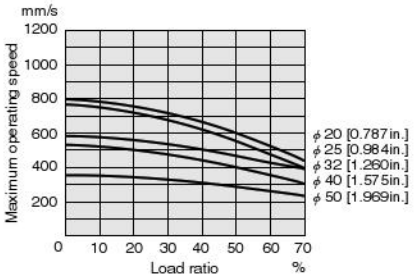

1mm/s = 0.0394in./sec.

Delay time

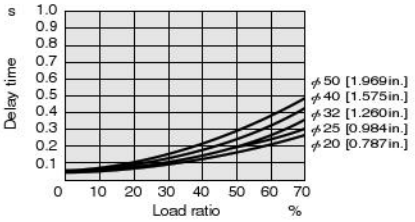

A110-4ME2
A113-4ME2

●Measurement conditions

- ●Air pressure : 0.5MPa {5.1kgf/cm²} [73psi.]
- ●Piping inner diameter and length : ϕ4 [0.16in.]×1000mm [39in.]
- ●Fitting : Quick fitting TS4-01
- ●Load ratio = $\frac{\text{Load}}{\text{Cylinder theoretical thrust}}$ (%)
- ●Cylinder stroke : 150mm [5.91in.]

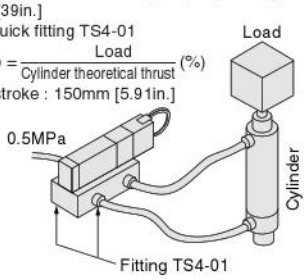

Maximum operating speed

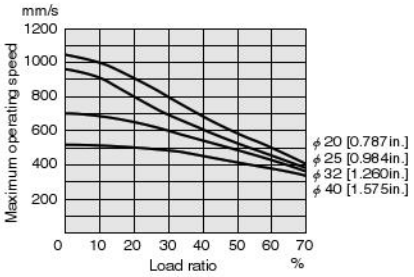

1mm/s = 0.0394in./sec.

Delay time

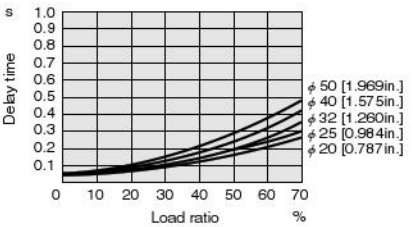

Flow Rate

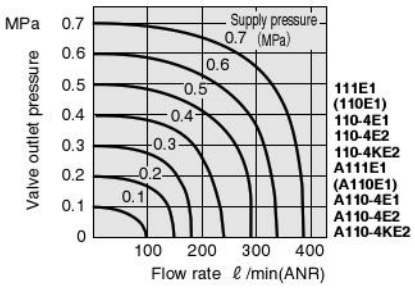

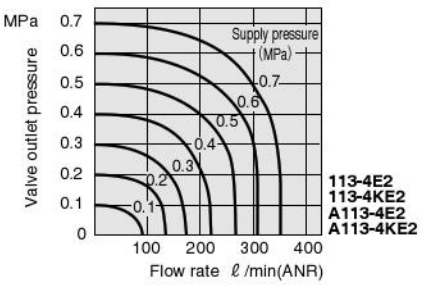

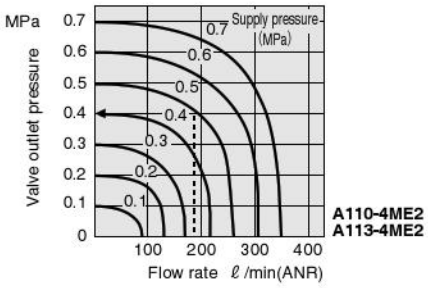

1MPA = 145psi.
1 ℓ/min = 0.0353ft³/min.

How to read the graph

When the supply pressure is 0.5MPa [73psi.] and the flow rate is 180 ℓ/min [6.35ft³/min.] (ANR), the valve outlet pressure becomes 0.4MPa [58psi.].

110 Series Tandem Solenoid Valve Order Codes

※ Single solenoid, double solenoid, twin solenoid, and tandem solenoid valves can be mounted together on the manifold.

● Solenoid valves

■3-position valve
Valve function
Closed center : **Blank**
Exhaust center : **-13**
Pressure center : **-14**

■Sub-base
Without sub-base : **Blank**
With sub-base : **-25**

■Manual override
Locking type : **-81**
Locking protruding type : **-83**
Locking manual lever type : **-84**

■Wiring type
Straight connector
with LED indicator : **-PSL**
L connector
with LED indicator : **-PLL**

		Basic model					Voltage
Sub-base piping	5-port double solenoid	A110-4ME2		-25	-81 -83 -84	-PSL -PLL	DC24V
	5-port 3-position	A113-4ME2	-13, -14				

Note : They cannot be used as single units.

●Always select one from each group.

● Manifold

■3-position valve
Valve function
Closed center : **Blank**
Exhaust center : **-13**
Pressure center : **-14**

■Manual override
Locking type : **-81**
Locking protruding type : **-83**
Locking manual lever type : **-84**

■Wiring type
Straight connector
with LED indicator : **-PSL**
L connector
with LED indicator : **-PLL**

■Manifold
Connection port
Quick fitting for ϕ4 tube : **-J4**
Quick fitting for ϕ6 tube : **-J6**

	Manifold model	Number of units		Station	Basic model					Voltage
Manifold for combination mounting of 2-, 3-, 5-port valves	110M	2 ⋮ 20	A AJ	Stn.□ ⋮ Stn.□	-A110-4ME2		-81 -83 -84	-PSL -PLL	-J4 -J6	DC24V
					-A113-4ME2	-13, -14				

●Valve mounting location from the left-hand side when facing the 4(A), 2(B) ports.

●Specify the valve model for each station.
●Enter **-BP** when closing a station with a block-off plate without mounting a valve.

●Always select one from each group.

●For the AJ type manifold only, specify either of the two.

Options

■Wiring type

Straight connector with LED indicator

L connector with LED indicator

●Lead wire length 300mm

■Manual override

Locking type

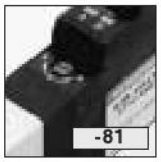

Locking protruding type

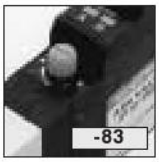

Locking manual lever type

■AJ type manifold

Quick fitting for ϕ4 tube

Quick fitting for ϕ6 tube

●Select the tube size for each station.

Additional Parts (To be ordered separately)

Speed controller

●For sub-base piping

Muffler

●For sub-base piping

Block-off plate

● 110 **MA-BP**
110— For 110M

Made to Order

Lead wire length

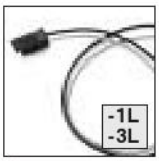

●For plug connector
●Length (mm) **-1L** : 1000 [39in.]
-3L : 3000 [118in.]

110 Series Solenoid Valve, Air-piloted Valve Order Codes

■2-, 3-port valve Number of ports

3-port

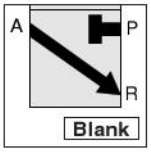

2-port

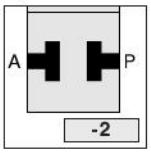

■2-, 3-port valve Valve function

Normally closed (NC)

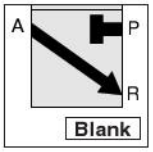

Normally open (NO)

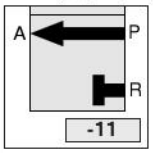

■3-position valve Valve function

Closed center

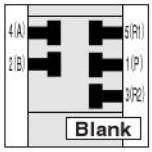

Exhaust center

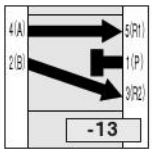

Pressure center

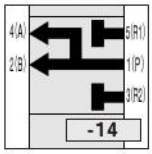

■Sub-base

Without sub-base

With sub-base

■Port fitting specifications Note 2

Female thread : Blank

-J41,-J42,-J43 : Quick fitting for ϕ4 tube
-J61,-J62,-J63 : Quick fitting for ϕ6 tube

●2(A) port of 111E1 (4(A) port of 110E1)

●1(P), 2(A) ports of 111E1

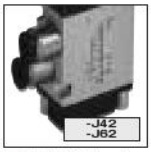

●4(A), 2(B) ports of 5-port

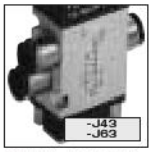

●1(P), 4(A), 2(B) ports of 110-4E1

■Manual override

Non-locking type

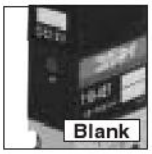

Locking protruding type

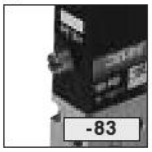

■Wiring type

●Lead wire length: 300mm [11.8in.] is standard.

Grommet type

Straight connector with LED indicator

L connector with LED indicator

		Basic model								Voltage
Direct piping	2-, 3-port	111E1	-2	-11			-J41,-J42 Note 3 -J61,-J62	-83	-PSL -PLL	DC12V DC24V AC100V AC200V
	5-port single solenoid	110-4E1					-J42,-J43 Note 3 -J62,-J63			
	5-port double solenoid	110-4E2					-J42 Note 4 -J62			
	5-port 3-position	113-4E2			-13 -14					
Sub-base piping	2-, 3-port	A111E1	-2	-11		-25		-83	-PSL -PLL	DC12V DC24V AC100V AC200V
	5-port single solenoid	A110-4E1								
	5-port double solenoid	A110-4E2								
	5-port 3- position	A113-4E2			-13 -14					
For manifold with combination mounting of 2-, 3-, 5-port valves only Note 1	2-, 3-port for 110M□F, FE	110E1	-2	-11			-J41 -J61	-83	-PSL -PLL	DC12V DC24V AC100V AC200V
	5-port, 2-position for 110M□F, FE	110-4KE2					-J42 -J62			
	5-port, 3-position for 110M□F, FE	113-4KE2			-13 -14					
	2-, 3-port for 110M□A, AJ	A110E1	-2	-11						
	5-port, 2-position for 110M□A, AJ	A110-4KE2								
	5-port, 3-position for 110M□A, AJ	A113-4KE2			-13 -14					
Direct piping air-piloted valve (made to order)	5-port single pilot	110-4A					-J42,-J43 -J62,-J63			
	5-port double pilot	110-4A2					-J42 -J62			
Sub-base piping air-piloted valve (made to order)	5-port single pilot	A110-4A				-25				
	5-port double pilot	A110-4A2								

Notes : 1. They cannot be used as single units.
2. The port fittings are for ϕ4: TSK4-M8M, and for ϕ6: TSK6-M8M.

Notes : 3. Side mounting of valve is not possible when -J41, -J42, -J43, -J61, -J62, or -J63 is selected, because in these cases there are no mounting holes on the valve side surface.
4. Mounting on the manifold only is possible when -J42 or -J62 is selected for the 110-4E2 or 113-4E2, because in these cases they do not have mounting holes.

Additional Parts (To be ordered separately)

Speed controller

●For direct piping ●For sub-base piping

Muffler

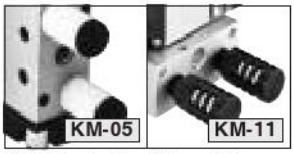

●For direct piping ●For sub-base piping

Mounting base

●For direct piping
●For 2-, 3-port and 5-port single solenoids

Block-off plate

●□M□-BP

111 — For 111M
110 — For 110M

F — For F type manifold
FE — For FE type manifold
A — For A type, AJ type manifolds

110 Series Manifold Order Codes

■2-, 3-port valve Number of ports

3-port

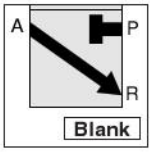

2-port

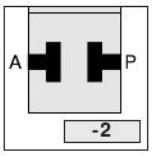

■2-, 3-port valve Valve function

Normally closed (NC)

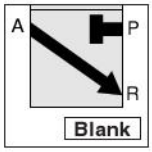

Normally open (NO)

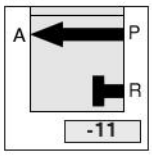

■3-position valve Valve function

Closed center

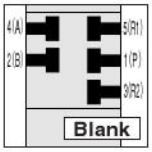

Exhaust center

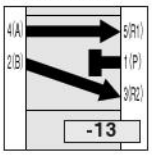

Pressure center

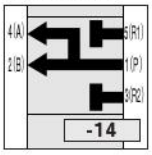

■Port fitting specifications Note 2

Female thread : **Blank**

-J41,-J42 : Quick fitting for ϕ4 tube

-J61,-J62 : Quick fitting for ϕ6 tube

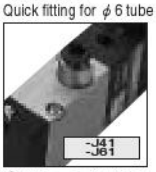

●2(A) port of 111E1 (4(A) port of 110E1)

●4(A), 2(B) ports of 5-port

■Manual override

Non-locking type

Locking protruding type

■Wiring type

●Lead wire length: 300mm [11.8in.] is standard.

Grommet type

Straight connector with LED indicator

L connector with LED indicator

Straight connector with LED indicator

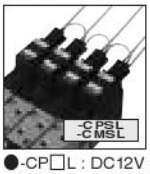

L connector with LED indicator

●-CP□L : DC12V and DC24V positive side, and AC100V, AC200V.
●-CM□L : DC12V and DC24V negative side.

■Manifold Connection port

Quick fittings for ϕ4 tube

Quick fittings for ϕ6 tube

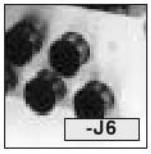

	Manifold model	Number of units		Station	Basic model							Voltage
Manifold for 2-, 3-port valves	111M	2 ⋮ 20	F	stn.□ ⋮ stn.□	-111E1	-2	-11	-J41 -J61	-83	-PSL -PLL -CPSL -CMSL -CPLL -CMLL	-J4 -J6	DC12V DC24V AC100V AC200V
			A AJ		-A111E1	-2	-11					
Manifold for combination mounting of 2-, 3-, 5-port valves	110M	2 ⋮ 20	F FE Note1	stn.□ ⋮ stn.□	-110E1	-2	-11	-J41 -J61	-83	-PSL -PLL -CPSL -CMSL -CPLL -CMLL		DC12V DC24V AC100V AC200V
					-110-4E1			-J42 -J62				
					-110-4E2							
					-110-4KE2							
					-113-4E2		-13 -14					
					-113-4KE2							
			A AJ	stn.□ ⋮ stn.□	-A110E1	-2	-11		-83	-PSL -PLL -CPSL -CMSL -CPLL -CMLL	-J4 -J6	DC12V DC24V AC100V AC200V
					-A110-4E1							
					-A110-4E2							
					-A110-4KE2							
					-A113-4E2		-13 -14					
					-A113-4KE2							
Manifold for mounting 5-port valve (made to order)	110M	2 ⋮ 20	F	stn.□ ⋮ stn.□	-110-4A			-J42 -J62				
					-110-4A2							
			A AJ	stn.□ ⋮ stn.□	-A110-4A						-J4 -J6	
					-A110-4A2							

●Valve mounting location from the left-hand side when facing the 4(A), 2(B) ports.
●Since a twin solenoid valve requires 2 stations per valve to mount, the second station (solenoid 12(S1) side) should be blank.

Notes : 1. Since the PR port on the port fitting type valves is located on the opposite side from the manifold, pilot air is exhausted directly from the valve. For that reason, collective exhaust is not possible and the port fitting type valves cannot be used for the manifold.
2. Fitting used for port fitting specifications, ϕ4: TSK-M8M, ϕ6: TSK6-M8M.

●Specify the valve model for each station.
●Enter **-BP** when closing a station with a block-off plate without mounting a valve.

●Specify only for F type manifolds.

●Pre-wired common terminal for AC100V and AV200V is either **-CPSL** or **-CPLL**.

●For the AJ type manifold only, specify either of the two.
●It is not required when ordering a single valve unit.

Made to Order

The 110 series includes made to order items of various kinds for further system development.
For details, see p.315～317.

Straight connector with LED indicator

●Without lead wire
●Connector, contacts included.

L connector with LED indicator

●Without lead wire
●Connector, contacts included.

Lead wire length

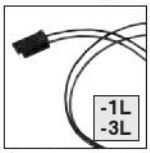

●For plug connector
●Length (mm)
-1L : 1000 [39in.]
-3L : 3000 [118in.]

DIN connector

●Cannot be used with **-L**.

LED indicator with built-in varistor

●Cannot be used with **-39**.

Built-in interface unit

●Possible to be directly controlled by output from micro computer or other logic devices.
●With LED indicator

Air-piloted valves 110 series

●5-port, 2-position
●Single pilot
●Double pilot

Operating Principles and Symbols

3-port

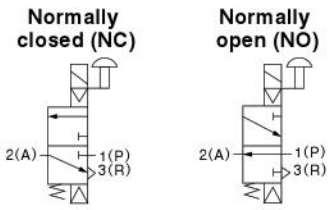

111E1

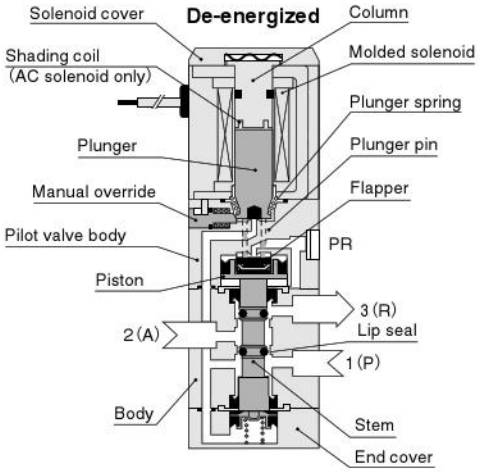

111E1-11

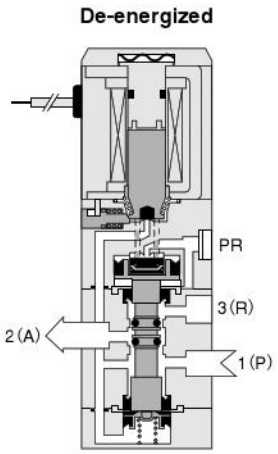

Major Parts and Materials

Parts		Materials
Valve	Body	Aluminum alloy (anodized)
	Stem	
	Lip seal	Synthetic rubber
	Flapper	
	Mounting base	Mild steel (zinc plated)
	Sub-base	Aluminum alloy (anodized)
	Plunger	Magnetic stainless steel
	Column	
Manifold	Body	Aluminum alloy (anodized)
	Block-off plate	Mild steel (nickel plated)
	Seal	Synthetic rubber

5-port, 2-position

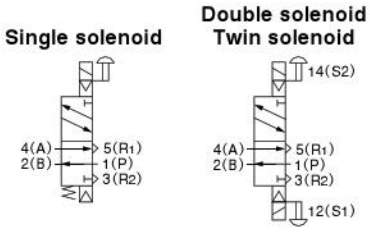

110-4E1

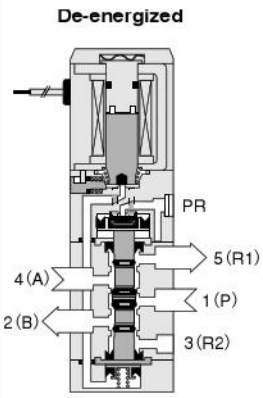

110-4E2

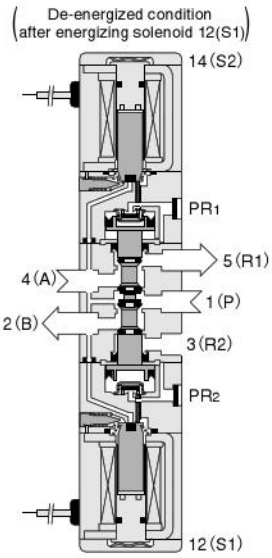

110-4KE2

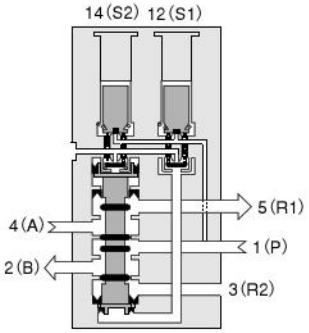

5-port, 3-position

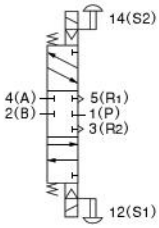

113-4E2

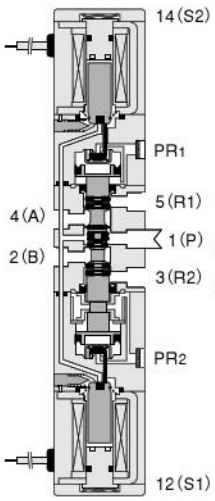

113-4KE2

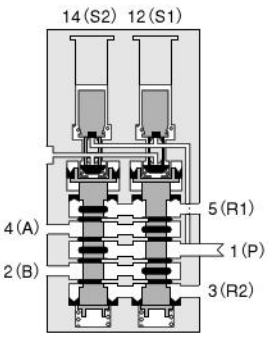

Dimensions of Solenoid Valve, 2-, 3-port (mm)

111E1

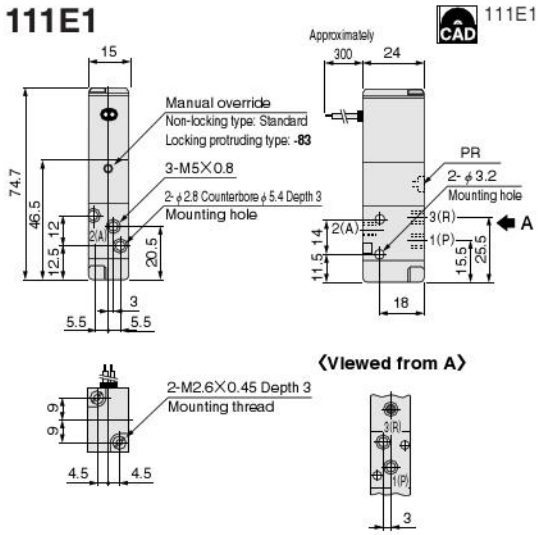

A111E1-25

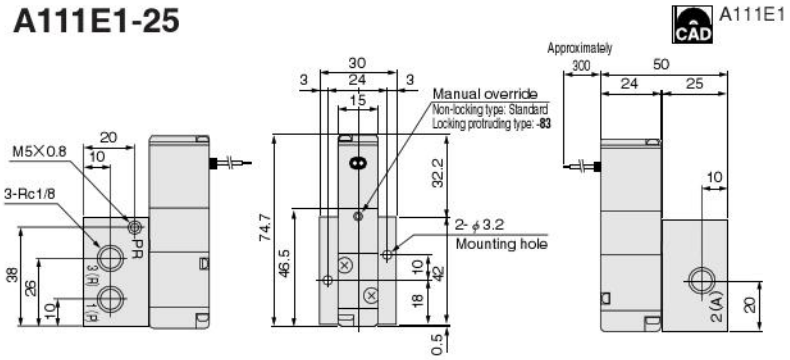

Additional Parts (To be ordered separately)

●Mounting base : **110-21** 110-BASE

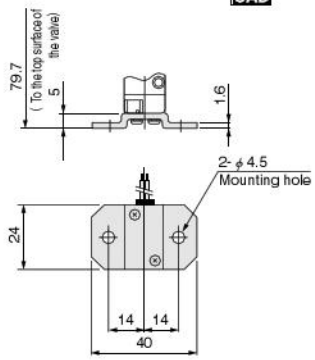

●Muffler 110-MUFF

For direct piping : **KM-05**

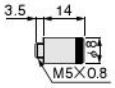

For sub-base piping : **KM-11**

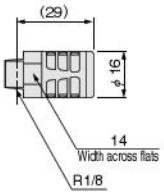

●Speed controller 110-SC

For direct piping : **SCE-M5**

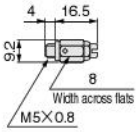

For sub-base piping : **SCE-01**

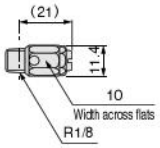

For options and made to order, see p.306.

Exhaust center

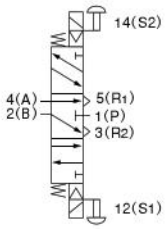

Pressure center

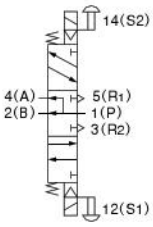

113-4E2-13

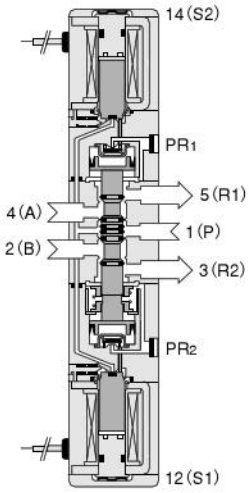

113-4KE2-13

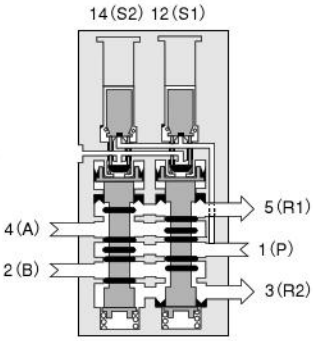

113-4E2-14

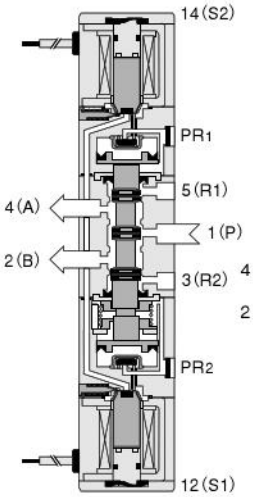

113-4KE2-14

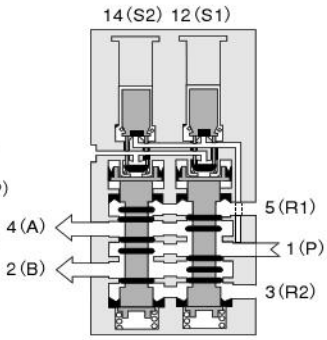

110-4E1

CAD 110-4E1

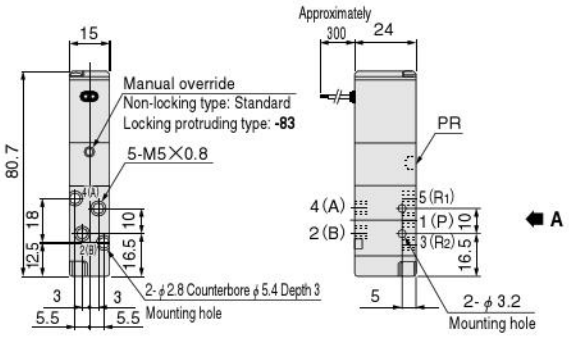

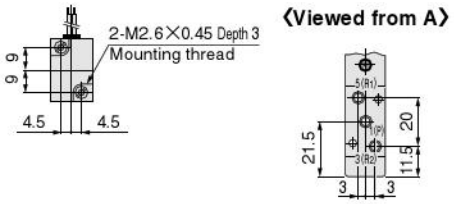

A110-4E1-25

CAD A110-4E1

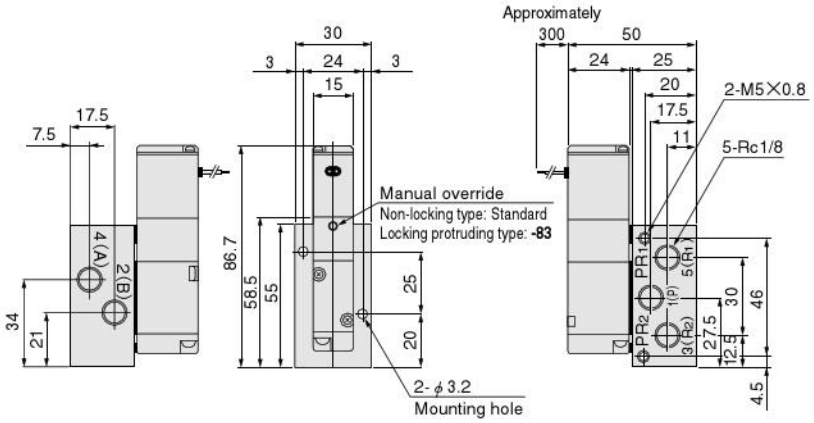

110-4E2

CAD 110-4E2

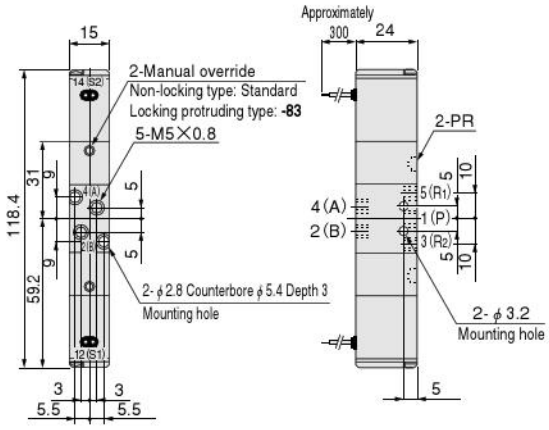

A110-4E2-25

CAD A110-4E2

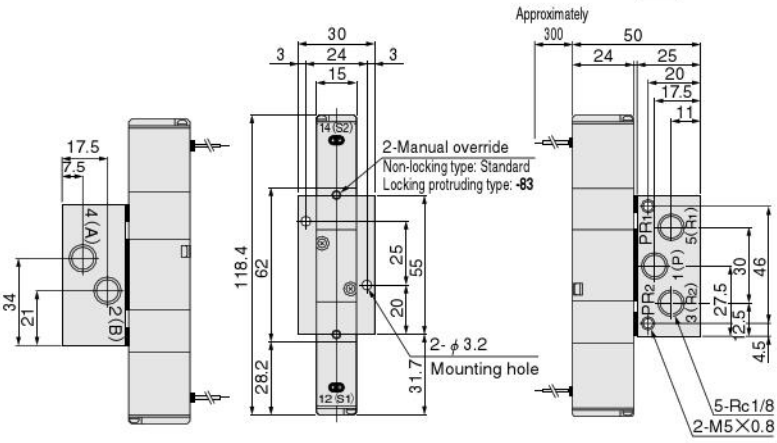

113-4E2

CAD 113-4E2

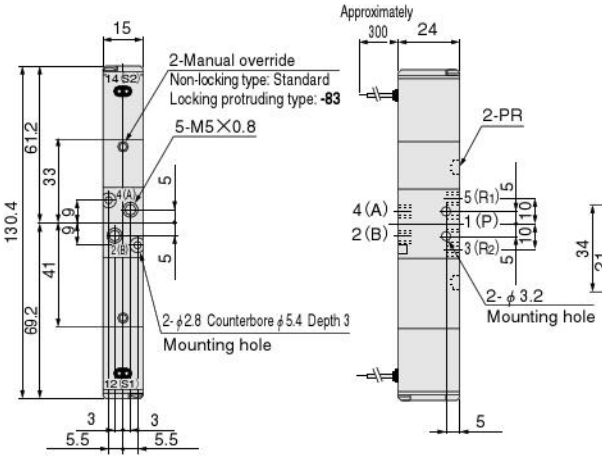

A113-4E2-25

CAD A113-4E2

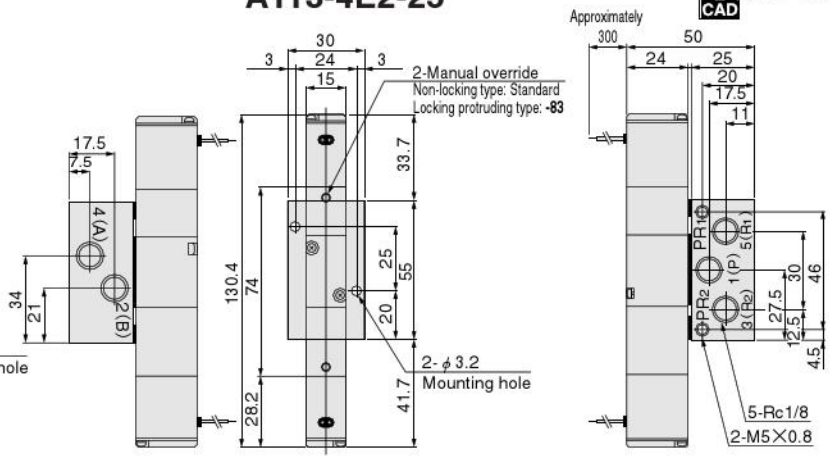

Additional Parts (To be ordered separately)

●Mounting base : **110-21** CAD 110-BASE

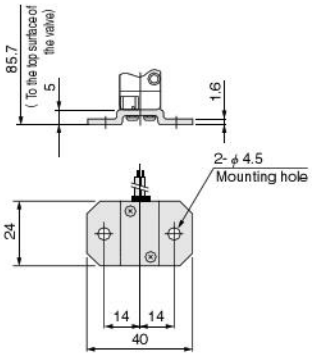

●Muffler CAD 110-MUFF

For direct piping : **KM-05**

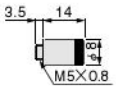

For sub-base piping : **KM-11**

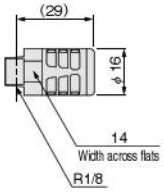

●Speed controller CAD 110-SC

For direct piping : **SCE-M5**

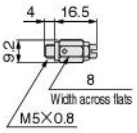

For sub-base piping : **SCE-01**

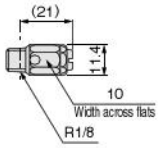

Options

●With quick fittings (2-, 3-port):

-J41 (For φ4 tube, 2(A) or 4(A) port with fitting)
-J42 (For φ4 tube, 1(P), 2(A) ports with fittings)
-J61 (For φ6 tube, 2(A) or 4(A) port with fitting)
-J62 (For φ6 tube, 1(P), 2(A) ports with fittings)
The drawing shows the -J42 specification.

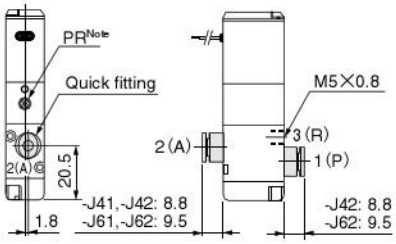

Note : PR is on the side with the A port.

●With quick fittings (5-port):

-J42 (For φ4 tube, 4(A), 2(B) ports with fittings)
-J43 (For φ4 tube, 1(P), 4(A), 2(B) ports with fittings)
-J62 (For φ6 tube, 4(A), 2(B) ports with fittings)
-J63 (For φ6 tube, 1(P), 4(A), 2(B) ports with fittings)
The drawing shows the -J43 specification.

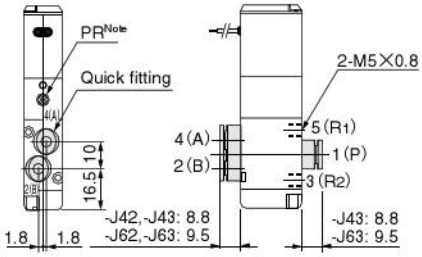

Note : PR is on the side with the A, B ports.

●Locking protruding type manual override : **-83**
CAD 110-ROCK

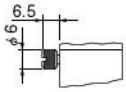

●Solenoid with straight connector : **-PSL**
CAD 110-PSL□

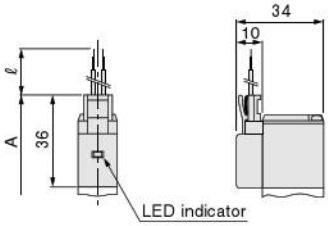

●Solenoid with L connector : **-PLL**
CAD 110-PLL□

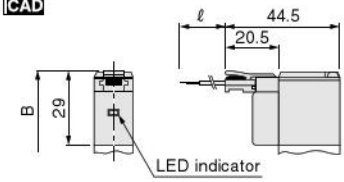

Made to Order

CAD 110-PSL□

●Solenoid with DIN connector : **-39**

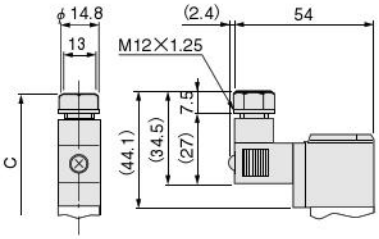

●Solenoid with LED indicator : **-L**

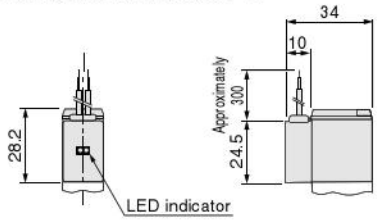

●Built-in interface unit : **-FA**

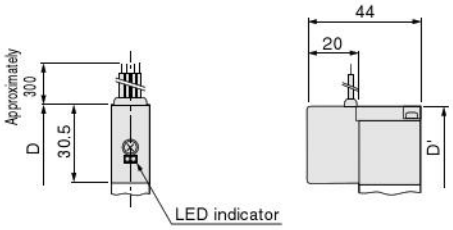

Remark: Valves with quick fittings do not have 2-φ3.2 side mounting holes. Moreover, the quick fittings are the following types:
TSK4-M8M (for φ4 tube), **TSK6-M8M** (for φ6 tube)

mm

Model / Code	A	B	C	D	D'	ℓ (lead wire length)	Remarks
111E1, A111E1-25	82.5	75.5	90.6	77	77.2	**-PSL, -PLL** : 300 Made to order **-1L** : 1000 **-3L** : 3000	Overall length to the end of the valve or sub-base
110-4E1	88.5	81.5	96.6	83	83.2		
A110-4E1-25	94.5	87.5	102.6	89	89.2		
110-4E2, A110-4E2-25	134	120	150.2	123	123.4		Overall length to the end of the opposite side solenoid
113-4E2, A113-4E2-25	146	132	162.2	135	135.4		

A110-4ME2-25-PSL

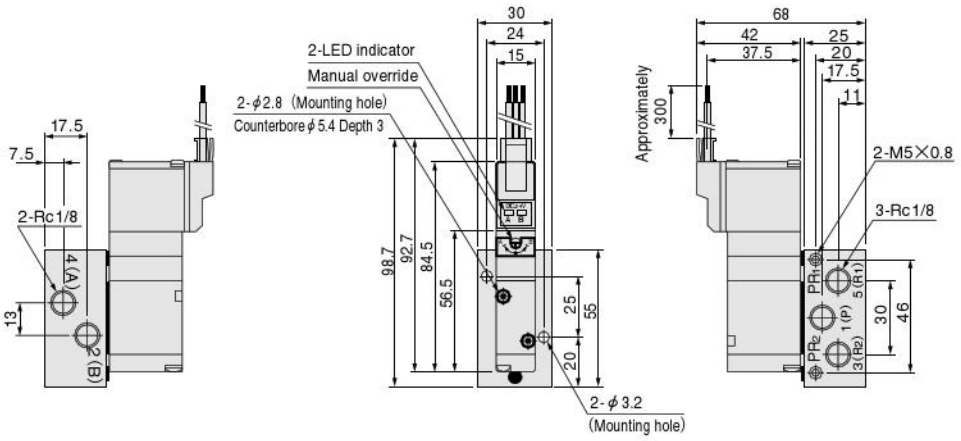

A110-4ME2-25-PLL

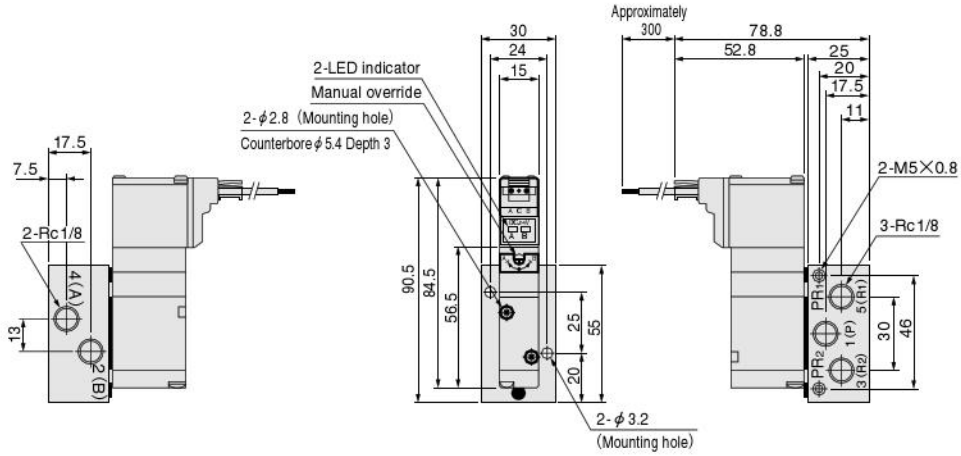

Options

●Locking protruding type: **-83**

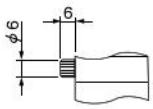

●Locking manual lever type: **-84**

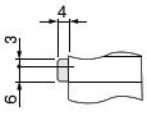

A113-4ME2-25-PSL

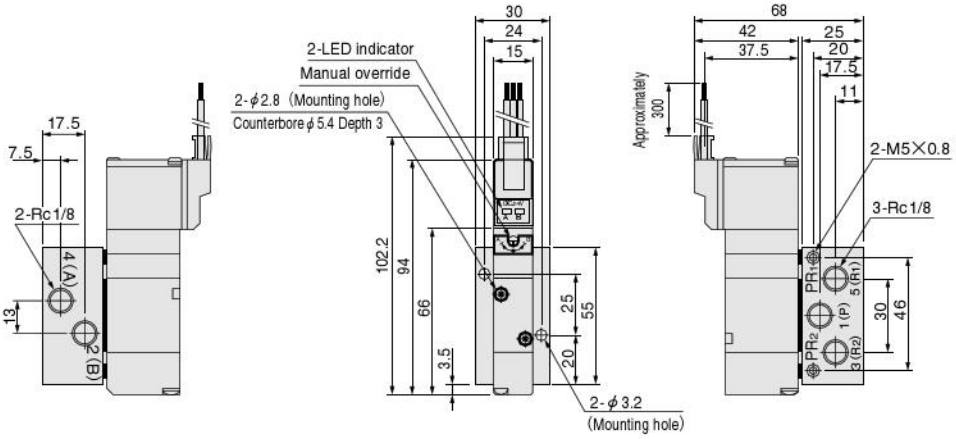

A113-4ME2-25-PLL

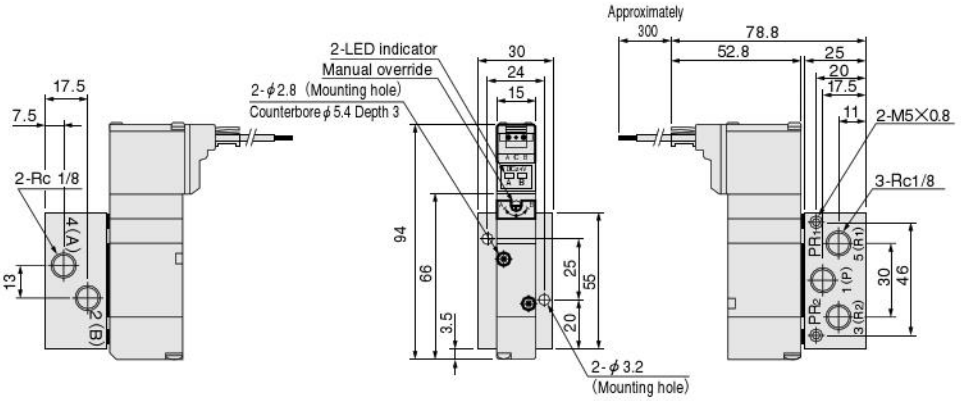

Options

●Locking protruding type : **-83**

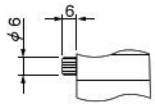

●Locking manual lever type : **-84**

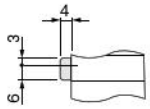

111M□F

111M-F

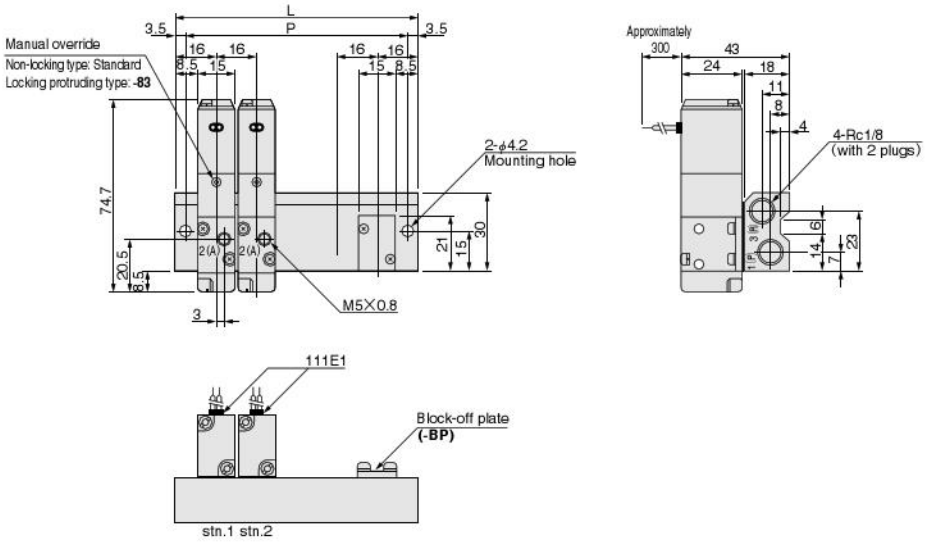

Unit dimensions

Model	L	P
111M2F	48	41
3F	64	57
4F	80	73
5F	96	89
6F	112	105
7F	128	121
8F	144	137
9F	160	153
10F	176	169
11F	192	185
12F	208	201
13F	224	217
14F	240	233
15F	256	249
16F	272	265
17F	288	281
18F	304	297
19F	320	313
20F	336	329

111M□A

111M-A

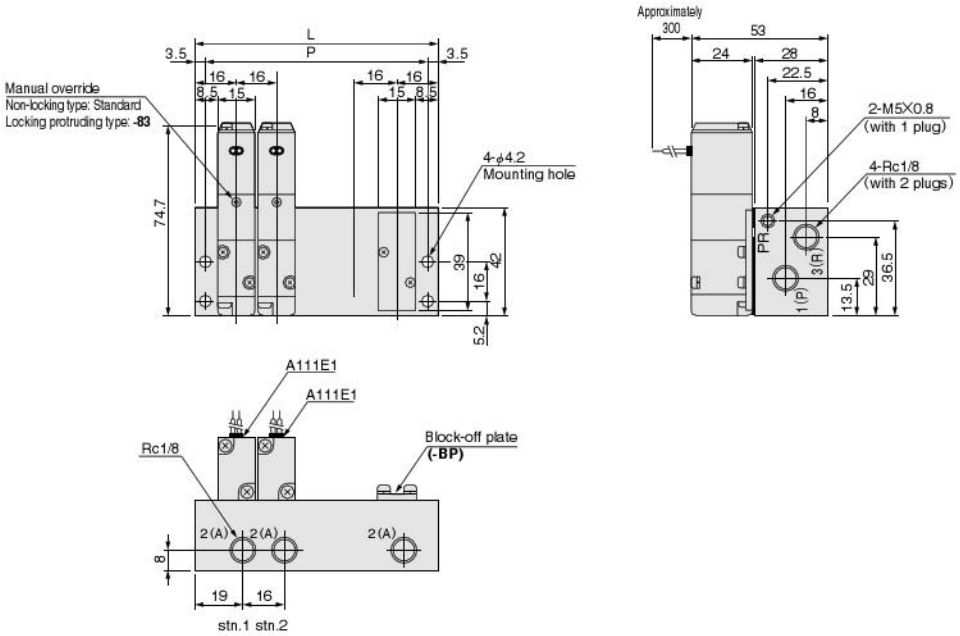

Unit dimensions

Model	L	P
111M2A	48	41
3A	64	57
4A	80	73
5A	96	89
6A	112	105
7A	128	121
8A	144	137
9A	160	153
10A	176	169
11A	192	185
12A	208	201
13A	224	217
14A	240	233
15A	256	249
16A	272	265
17A	288	281
18A	304	297
19A	320	313
20A	336	329

111M□AJ

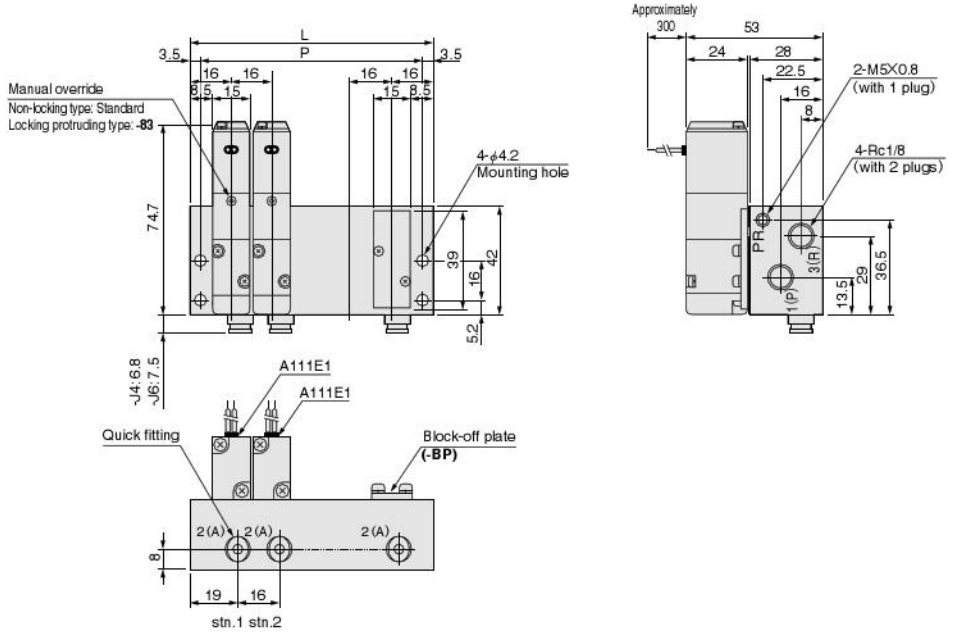

Unit dimensions

Model	L	P
111M2AJ	48	41
3AJ	64	57
4AJ	80	73
5AJ	96	89
6AJ	112	105
7AJ	128	121
8AJ	144	137
9AJ	160	153
10AJ	176	169
11AJ	192	185
12AJ	208	201
13AJ	224	217
14AJ	240	233
15AJ	256	249
16AJ	272	265
17AJ	288	281
18AJ	304	297
19AJ	320	313
20AJ	336	329

Options

●With quick fitting (2-, 3-port):

-J41 (For φ 4 tube, 2(A) or 4(A) port with fitting)

-J61 (For φ 6 tube, 2(A) or 4(A) port with fitting)

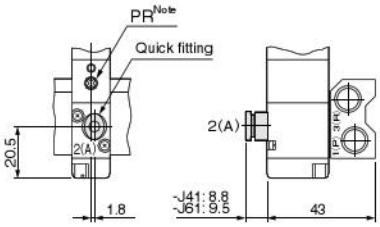

Note : PR is on the A port side.

●With quick fittings (5-port):

-J42 (For φ 4 tube, 4(A), 2(B) ports with fittings)

-J62 (For φ 6 tube, 4(A), 2(B) ports with fittings)

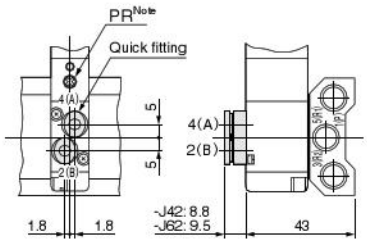

Note : PR is on the side with the 4(A), 2(B) ports.

●Locking protruding type manual override: **-83**

CAD 110-ROCK

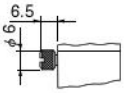

●Solenoid with straight connector: **-PSL**

CAD 110-PSL□

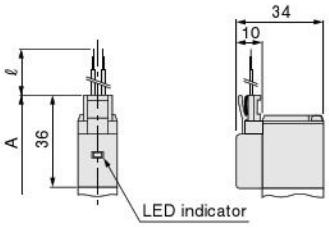

●Solenoid with L connector: **-PLL**

CAD 110-PLL□

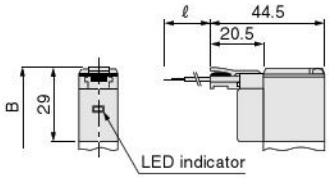

Made to Order

CAD 110-PSL□

●Solenoid with DIN connector: **-39**

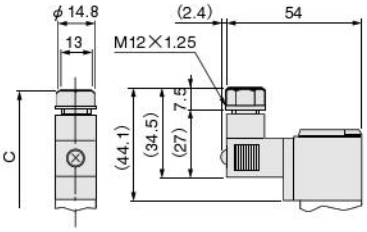

●Solenoid with LED indicator: **-L**

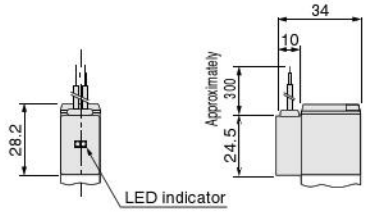

●Built-in interface unit: **-FA**

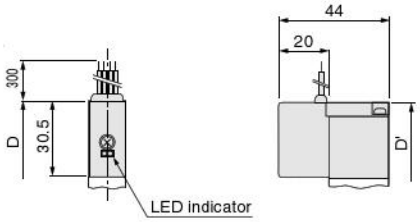

Remark: Valves with quick fittings do not have 2-φ 3.2 side mounting holes. Moreover, the quick fittings are the following types:
TSK4-M8M (for φ 4 tube), **TSK6-M8M** (for φ 6 tube)

mm

Model / Code	A	B	C	D	D'	ℓ (lead wire length)
111E1, A111E1	82.5	75.5	90.6	77	77.2	**-PSL, -PLL :** 300 Made to order **-1L** : 1000, **-3L** : 3000
110-4E1, 110-4KE2, 113-4KE2, A110-4E1	88.5	81.5	96.6	83	83.2	
110-4E2, A110-4E2	134	120	150.2	123	133.4	
113-4E2, A113-4E2	146	132	162.2	135	135.4	

Dimensions of Manifold for Combination Mounting of 2-, 3-, 5-port Valves (mm)

110M□F

110M-F

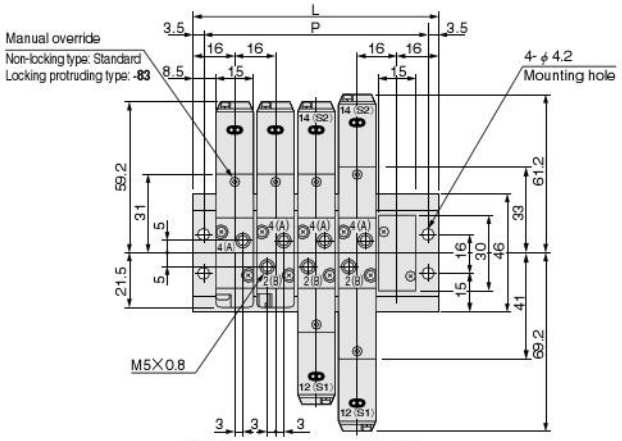

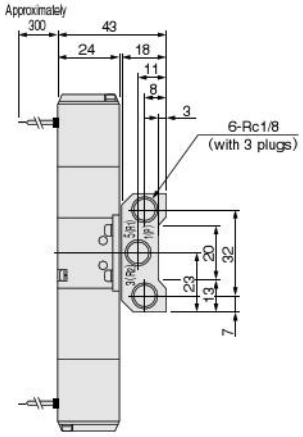

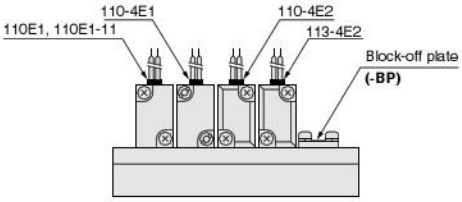

stn.1 stn.2 stn.3 stn.4 stn.5

Example of combination mounting with twin solenoid valves

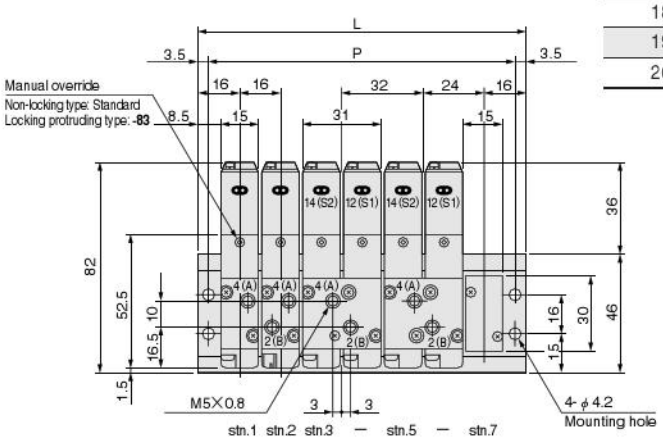

stn.1 stn.2 stn.3 — stn.5 — stn.7

Unit dimensions

Model	L	P
110M2F	48	41
3F	64	57
4F	80	73
5F	96	89
6F	112	105
7F	128	121
8F	144	137
9F	160	153
10F	176	169
11F	192	185
12F	208	201
13F	224	217
14F	240	233
15F	256	249
16F	272	265
17F	288	281
18F	304	297
19F	320	313
20F	336	329

110M□FE

110M-FE

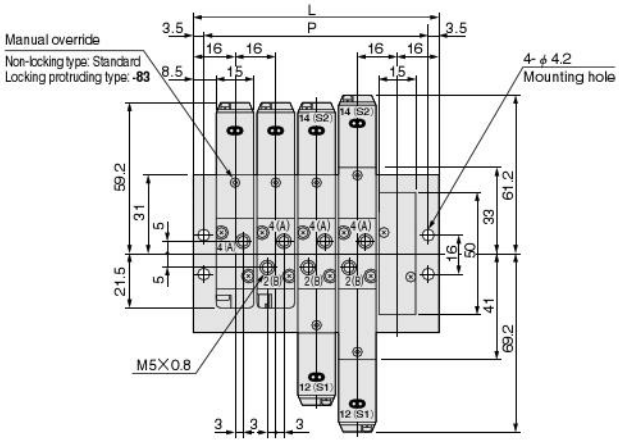

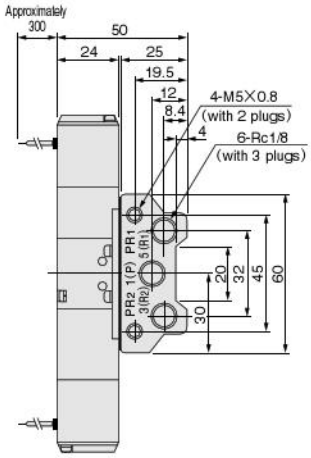

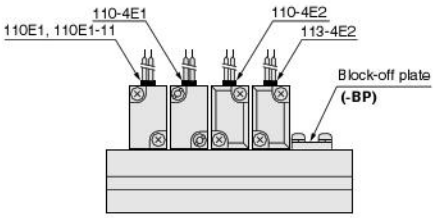

stn.1 stn.2 stn.3 stn.4 stn.5

Unit dimensions

Model	L	P
110M2FE	48	41
3FE	64	57
4FE	80	73
5FE	96	89
6FE	112	105
7FE	128	121
8FE	144	137
9FE	160	153
10FE	176	169
11FE	192	185
12FE	208	201
13FE	224	217
14FE	240	233
15FE	256	249
16FE	272	265
17FE	288	281
18FE	304	297
19FE	320	313
20FE	336	329

For options and made to order, see p.310.

110M□A

110M-A

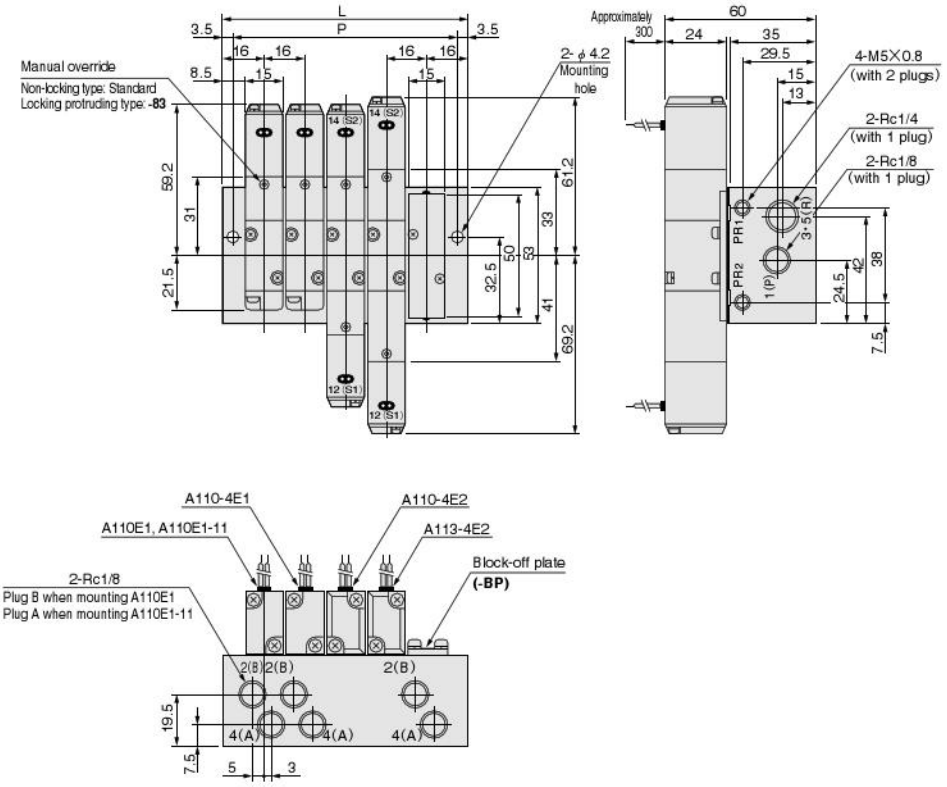

Unit dimensions

Model	L	P
110M2A	48	41
3A	64	57
4A	80	73
5A	96	89
6A	112	105
7A	128	121
8A	144	137
9A	160	153
10A	176	169
11A	192	185
12A	208	201
13A	224	217
14A	240	233
15A	256	249
16A	272	265
17A	288	281
18A	304	297
19A	320	313
20A	336	329

110M□AJ

110M-A

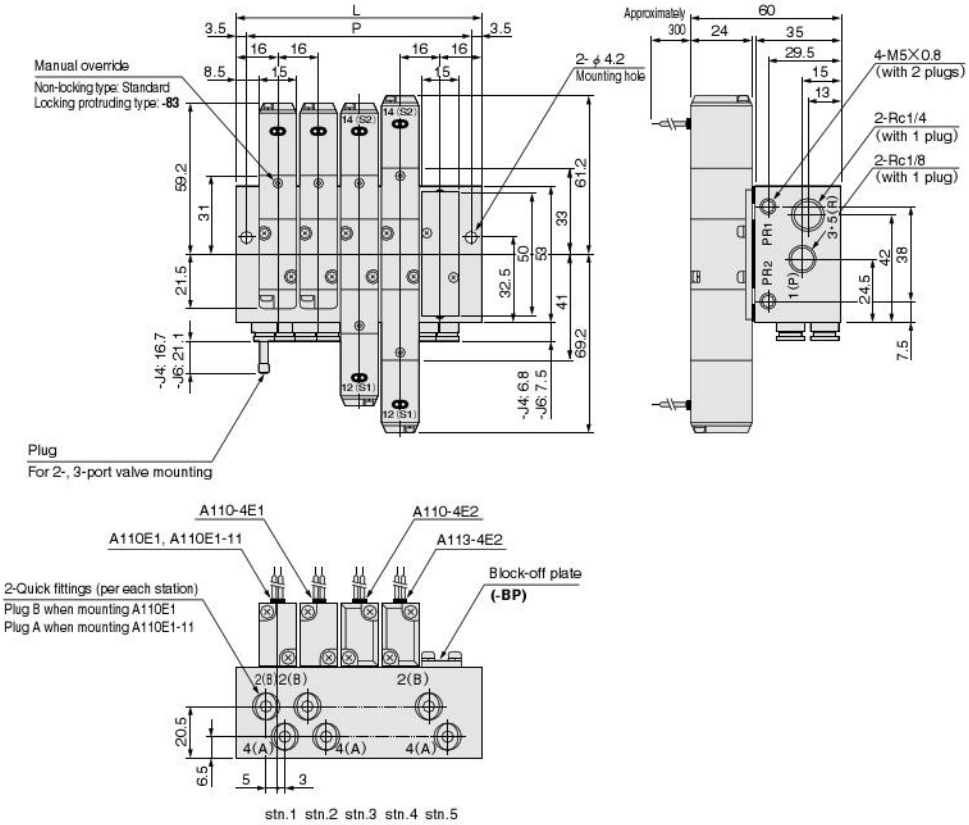

Unit dimensions

Model	L	P
110M2AJ	48	41
3AJ	64	57
4AJ	80	73
5AJ	96	89
6AJ	112	105
7AJ	128	121
8AJ	144	137
9AJ	160	153
10AJ	176	169
11AJ	192	185
12AJ	208	201
13AJ	224	217
14AJ	240	233
15AJ	256	249
16AJ	272	265
17AJ	288	281
18AJ	304	297
19AJ	320	313
20AJ	336	329

For options and made to order, see p.310.

Dimensions of Manifold for Combination Mounting of Tandem Solenoid and 2-, 3-, 5-port Valves (mm)

110M□A

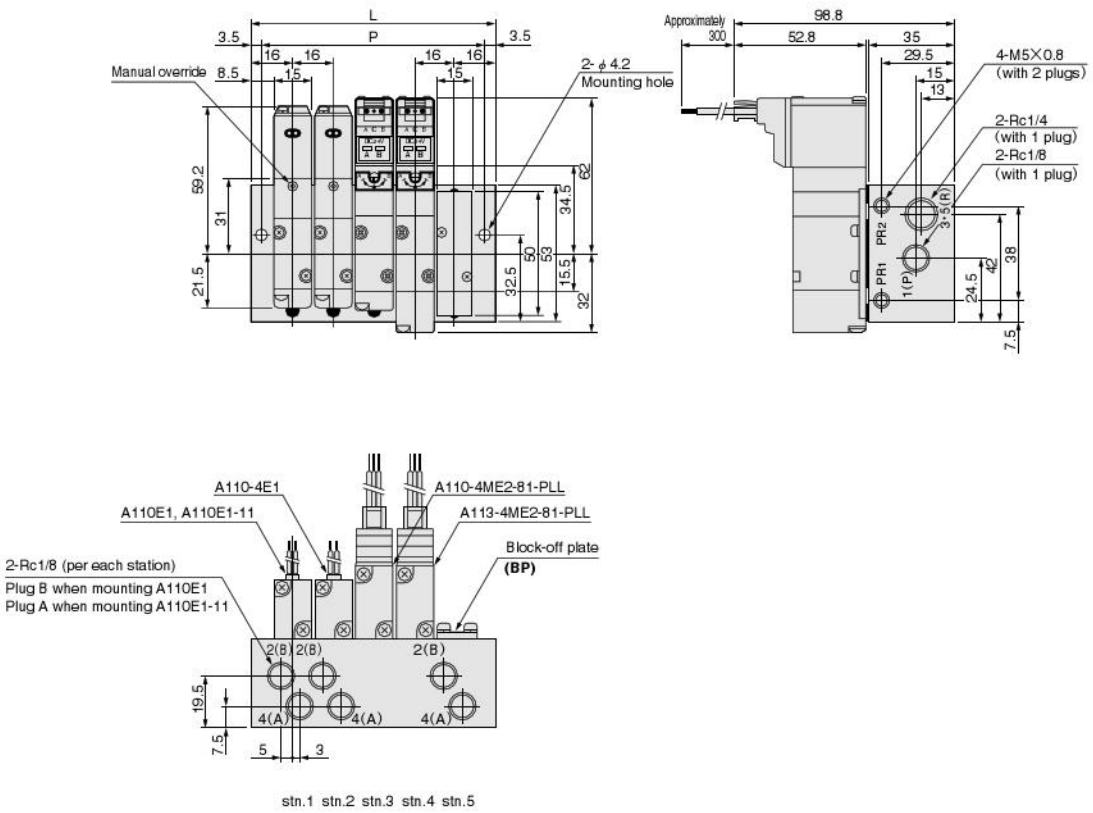

Unit dimensions

Model	L	P
110M2A	48	41
3A	64	57
4A	80	73
5A	96	89
6A	112	105
7A	128	121
8A	144	137
9A	160	153
10A	176	169
11A	192	185
12A	208	201
13A	224	217
14A	240	233
15A	256	249
16A	272	265
17A	288	281
18A	304	297
19A	320	313
20A	336	329

110M□AJ

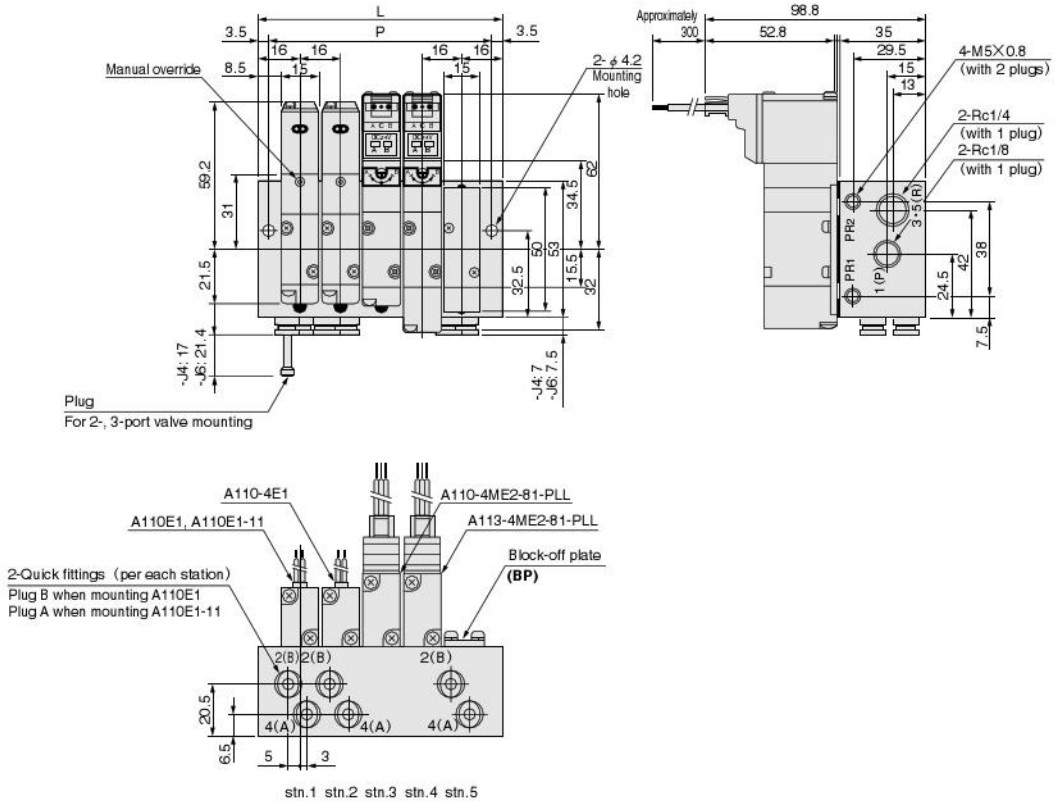

Unit dimensions

Model	L	P
110M2AJ	48	41
3AJ	64	57
4AJ	80	73
5AJ	96	89
6AJ	112	105
7AJ	128	121
8AJ	144	137
9AJ	160	153
10AJ	176	169
11AJ	192	185
12AJ	208	201
13AJ	224	217
14AJ	240	233
15AJ	256	249
16AJ	272	265
17AJ	288	281
18AJ	304	297
19AJ	320	313
20AJ	336	329

Made to Order

The 110 series Solenoid Valves include a variety of made to order solenoids for application in a wider range of control and wiring types.

Plug connector

Straight connector with LED indicator

- Without lead wire
- Connector and contacts included

L connector with LED indicator

- Without lead wire
- Connector and contacts included

- When ordering, enter **-PSLN** or **-PSLL** in place of the normal option code for the wiring type.

Lead wire length

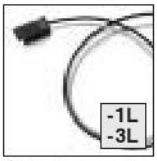

- For plug connector
- Length mm [in.]
  -1L : 1000 [39]
  -3L : 3000 [118]

- For lead wire length, **-1L** is 1000mm [39in.] and **-3L** is 3000mm [118in.].
  When ordering, enter **-1L** or **-3L** following the wiring type option code.

DIN connector

A compact connector that is highly resistant to dust and water splashes.
Employs a self-stripping method that eliminates the need for de-sheathing the lead wire.

- When ordering, enter **-39** in place of the normal option code for the wiring type.
- A varistor for surge suppression is also equipped.
  (For the AC100V and AC200V only. For DC12V and DC24V, a flywheel diode for surge suppression is installed as standard equipment.)
- LED indicator is not available.

Wiring Instructions

- **Solenoid with DIN connector**

When de-sheathing (only the outer sheath of the cabtyre), pay attention to the lead wire direction. The cover will be easily mounted when the lead wire on the outer side of the terminal cover is set about 8mm [0.31in.] longer than the inner side.
Without stripping off the sheath, insert the lead until it contacts the lead wire stopper on the terminal body, and then place the contact from the upper side. Then use pliers to press the lead wire further to ensure that the contact is firmly touching the core wire.

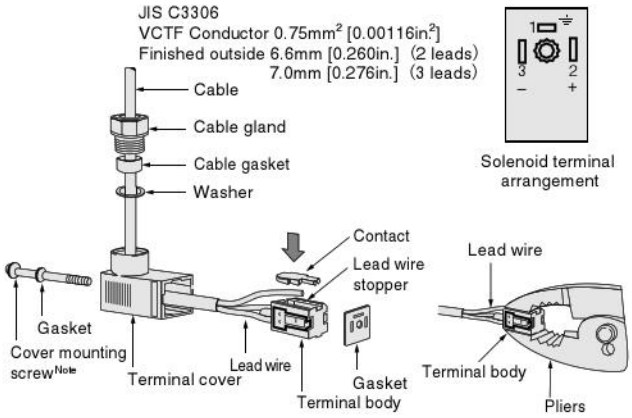

Note: The appropriate tightening torque for the cover mounting screw is 29.4N•cm {3kgf•cm} [2.6in•lbf].

LED Indicator

The LED indicator for confirmation of operation is also available without a plug connector. This creates a clean monoblock look with a compact cover.

- When ordering, enter **-L** in place of the normal option code for the wiring type.
- A varistor for surge suppression is also equipped.
  (For the AC100V and AC200V only. For the DC12V and DC24V, a flywheel diode for surge suppression is installed as standard equipment.)

Built-in Interface unit

Includes an interface unit with a photo transistor. Can be directly controlled by a microcomputer and logic chip, and is equipped with full electric noise countermeasures and LED indicators.

- ●When ordering, enter **-FA** in place of the normal option code for the wiring type.
- ●Cannot be ordered in combination with any other solenoid option.
- ●Rated voltages for the solenoid are AC100V and AC200V only.

Block diagram

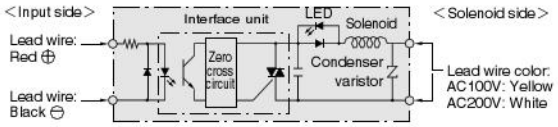

The interface unit is a triac with a photo coupler. Applying DC5V to the input terminals when AC power is applied on the solenoid side causes the LED inside the unit to light up, turns on the triac, and energizes the solenoid. At this time, an LED indicator turns on.
When the input side voltage reaches 0V, the LED inside the unit shuts off, the triac is turned off, and the solenoid is de-energized. At this time, the LED indicator is turned off.
With a built-in zero-cross circuit, the zero-cross voltage is used to turn the power on, and the zero-cross current to turn it off.

Example of control circuits

1. Control by transistor

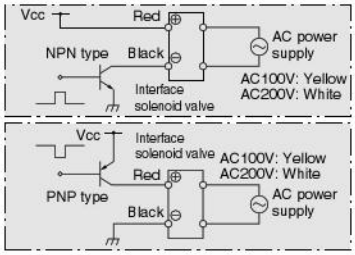

2. Control by TTL, IC

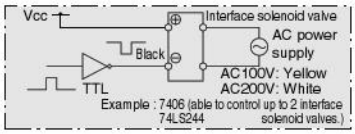

3. Control by relay contact

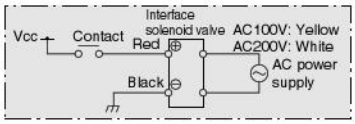

4. When input is not a DC5V power supply

Install resistance externally to drop the input voltage to 4～6V.

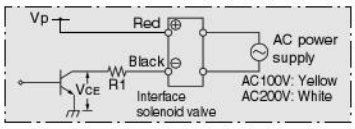

Example

$$R1 = \frac{Vp-5-V_{CE}}{18 \times 10^{-3}} [\Omega]$$

Vp〔V〕	R1
12	390 Ω ¼W
24	1.0K Ω 1W

In the case of $V_{CE}=0$〔V〕

Solenoid Specifications for Valve with Built-in Interface Unit

Item			Specifications			
Input side	Rated voltage	DC V	5			
	Voltage range	DC V	4～6			
	Current (when 5V DC is applied)	mA	18			
	Operating voltage	DC V	4 or below			
	Return voltage	DC V	0.8 or over			
	Color of lead wire		Red (+), Black (−)			
Solenoid side	Rated voltage	AC V	100		200	
	Type		Shading type			
	Operating voltage range	AC V	90～125 (100 +25 −10 %)		180～250 (200 +25 −10 %)	
	Current (when rated voltage is applied)	Frequency Hz	50	60	50	60
		Starting mA(r.m.s.)	36	32	18	16
		Energizing mA(r.m.s.)	24	20	12	10
	Leakage current	Frequency Hz	50	60	50	60
		Current mA(r.m.s.)	0.3	0.4	0.6	0.8
	Surge suppression (as standard)		Built-in varistor on solenoid side			
	Color of lead wire		Yellow		White	
	Color of LED indicator (as standard)		Yellow		Green	
Voltage resistance			Min. AC1500V at input side and solenoid side			
Insulation resistance		MΩ	Between input side and solenoid side, and between whole terminals and body		Over 100	
Zero-cross function			Available			
Wiring type and lead wire length			Grommet type: 300mm [11.8in.]			

Wiring instructions

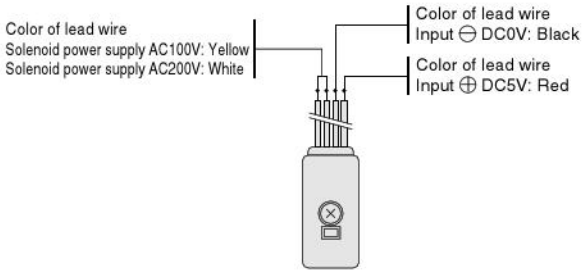

1. Separate the input side and solenoid side lead wires by color. Never apply AC power/6VDC or more to the input side.
2. Ensure that voltage ripple on the input side remains within the range shown below.

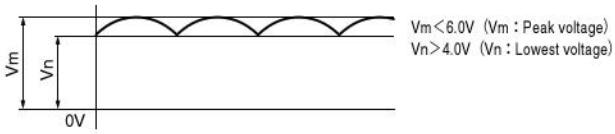

3. Even when a wrong polarity is applied to the input side, a built-in diode for protection against reverse polarity eliminates any worry about short circuiting. The valve will not operate, however.
4. A varistor and condensor are built-in in the solenoid power supply side, for protection circuit against external surge voltages. As a result, there is a 0.3mA leakage current in AC100V, and a 0.6mA leakage current in AC200V.
5. The operation and return times of the interface unit are 10ms or less with a 50Hz AC power supply, and 8ms or less with a 60Hz AC power supply.

Made to Order

Air-piloted valves 110 series

●The ideal air valve for master valves or pilot valves for total pneumatic control.

Effective Area

mm² 〔Cv〕

Specifications / Basic model		For direct piping, F type manifold	For sub-base, A, AJ type manifolds
		110-4A, 110-4A2	**A110-4A, A110-4A2**
Single valve		4.2〔0.23〕	4.0〔0.22〕
Built-in quick fitting for φ4 tube	-J42 4(A), 2(B) ports with fittings	3.6〔0.20〕	3.6〔0.20〕 (When mounted on the AJ type manifold with -J4 specification)
	-J43 1(P), 4(A), 2(B) ports with fittings		—
Built-in quick fitting for φ6 tube	-J62 4(A), 2(B) ports with fittings	—	4.0〔0.22〕 (When mounted on the AJ type manifold with -J4 specification)
	-J63 1(P), 4(A), 2(B) ports with fittings	—	—
Remarks		● Attaching TS4-M5 to the 1(P), 4(A), 2(B) ports gives the value 1.8〔0.1〕. ● On the F type manifold, attaching TS4-M5 to the 4(A), 2(B) ports gives the value 2.1〔0.12〕. ● When large flow rates are required, we recommend the built-in quick fittings.	● Attaching TS4-01 to the 1(P), 4(A), 2(B) ports on the sub-base (-25) gives the value 3.2〔0.18〕.

Specifications

Item / Basic model		For direct piping, F type manifold		For sub-base, A, AJ type manifolds	
		Single pilot	Double pilot	Single pilot	Double pilot
		110-4A	**110-4A2**	**A110-4A**	**A110-4A2**
Media		Air			
Operation type		Air-piloted type			
Number of positions and ports		2 positions, 5 ports			
Effective area〔Cv〕 mm²		4.2〔0.23〕 Note 1			
Port size	Main	M5×0.8 Note 2		— Note 2	
	Pilot	M5×0.8			
Lubrication		Not required			
Operating pressure range MPa {kgf/cm²} [psi.]	Main	0.15～0.7 {1.5～7.1} [22～102]	0～0.7 {0～7.1} [0～102]	0.15～0.7 {1.5～7.1} [22～102]	0～0.7 {0～7.1} [0～102]
	Pilot	See the table "Minimum Pilot Pressure"			
Proof pressure MPa {kgf/cm²} [psi.]		1.05 {10.7 } [152]			
Operating temperature range (atmosphere and media) °C [°F]		5～60 [41～140]			
Shock resistance m/s²{G}		1373.0 {140.0} (Axial direction 294.2 {30.0})			
Mounting direction		Any			
Maximum operating frequency Hz		5			
Mass g [oz.]		40 [1.41]	45 [1.59]	45 [1.59] (140 [4.94]) Note 3	50 [1.76] (145 [5.11]) Note 3

Notes: 1. For details, see the effective area.
2. For details, see the port size.
3. Figures in parentheses ( ) are the mass with sub-plate: -25.

※ For optional specifications and order codes, see p.301～302.

Port Size

Specifications / Basic model / Port			For direct piping, F type manifold	For sub-base, A, AJ type manifolds	Remarks
			110-4A 110-4A2	**A110-4A A110-4A2**	
Female thread		1(P)	M5×0.8	—	Standard
		4(A), 2(B)			
		3(R2), 5(R1)			
Built-in quick fitting	-J42	1(P)	M5×0.8	—	●Straight type ●For φ4 tube ●For both nylon tubes and urethane tubes
		4(A), 2(B)	Built-in quick fitting		
		3(R2), 5(R1)	M5×0.8		
	-J43	1(P)	Built-in quick fitting		
		4(A), 2(B)			
		3(R2), 5(R1)	M5×0.8		
Sub-base -25		1(P)	—	Rc1/8	●All ports sub-base piping
		4(A), 2(B)			
		3(R2), 5(R1)			
F type manifold		1(P)	Rc1/8	—	●1(P), 3(R2), 5(R1) manifold, 4(A), 2(B) valve piping
		4(A), 2(B)	M5×0.8 or quick fitting		
		3(R2), 5(R1)	Rc1/8		
A type manifold		1(P)	—	Rc1/8	●All ports manifold piping
		4(A), 2(B)			
		3, 5(R)		Rc1/4	
AJ type manifold		1(P)	—	Rc1/4	●All ports manifold piping ●4(A), 2(B) ports -J4 : For φ4 tube -J6 : For φ6 tube
		4(A), 2(B) -J4		Built-in quick fitting	
		4(A), 2(B) -J6		Built-in quick fitting	
		3, 5(R)		Rc1/4	

Manifold Specifications and Port Size

Manifold model	Specifications	Port		Port size
F type	P, R manifold piping A, B valve piping	1(P)		Rc1/8
		4(A), 2(B)		M5×0.8 or quick fitting (Valve order code: -J42)
		3(R2), 5(R1)		Rc1/8
A type	All ports manifold piping	1(P)		Rc1/8
		4(A), 2(B)		Rc1/8
		3, 5(R)		Rc1/4
AJ type	A, B ports built-in quick fittings All ports manifold piping	1(P)		Rc1/8
		4(A), 2(B)	-J4	Quick fitting for φ4 tube
			-J6	Quick fitting for φ6 tube
		3, 5(R)		Rc1/4

※ For optional specifications and order codes, see p.302.

Manifold Mass

g [oz.]

Manifold model		Mass calculation of each unit (n=number of units)	Mounting valve			
			110-4A	**110-4A2**	**A110-4A**	**A110-4A2**
F type		(20×n)+30 [(0.71×n)+1.06]	40 [1.41]	45 [1.59]	—	—
A type		(60×n)+60 [(2.12×n)+2.12]	—	—	45 [1.59]	50 [1.76]
AJ type	-J4	(67×n)+60 [(2.36×n)+2.12]				
	-J6	(64×n)+60 [(2.26×n)+2.12]				

Calculation example: The mass of 110M 10F stn.1～5 110-4A, stn.6～10 110-4A2 becomes (20×10)+30+(40×5)+(45×5)=655g [23.10 oz.]

Minimum Pilot Pressure

MPa {kgf/cm²} [psi.]

Model / Main pressure	0.15 {1.5} [22]	0.3 {3.0} [44]	0.5 {5.1} [73]	0.7 {7.1} [102]
110-4A	0.15 {1.5} [22]	0.25 {2.5} [36]	0.34 {3.5} [49]	0.45 {4.5} [65]
110-4A2	0.08 {0.8} [12]	0.10 {1.0} [15]	0.12 {1.2} [17]	0.14 {1.4} [20]

Required Time for Switching

S

Model	Operation	Pilot line length L m [ft.]						Measurement circuit	Measurement conditions
		2 [6.6]	6 [19.7]	10 [32.8]	20 [65.6]	50 [163.9]	100 [327.8]		
110-4A	ON	0.06	0.14	0.26	0.63	2.30	6.54	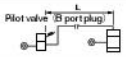	●Pilot valve=050-4E1 (effective area1.2mm² 〔Cv: 0.067〕) ●Tube inner diameter = 4mm [0.16in.] ●Air pressure (both main and pilot)=0.5MPa [73psi.]
	OFF	0.12	0.33	0.67	1.65	6.30	19.50		
A110-4A2	ON	0.07	0.16	0.29	0.70	2.66	7.40	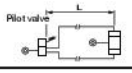	
	OFF								

Cylinder Operating Speed and Flow Rate

110-4A

●Measurement conditions

- ●Air pressure : 0.5MPa {5.1kgf/cm²} [73psi.]
- ●Piping inner diameter and length: ϕ2.5 [0.10in.]×1000mm [39in.]
- ●Fitting : Quick fitting TS4-M5
- ●Load ratio = $\frac{\text{Load}}{\text{Cylinder theoretical thrust}}$ (%)
- ●Cylinder stroke:150mm [5.91in.]

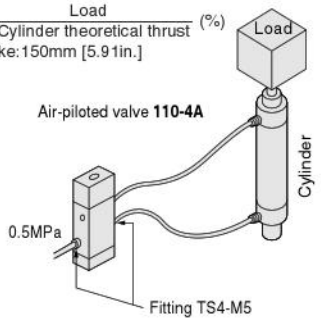

Maximum operating speed

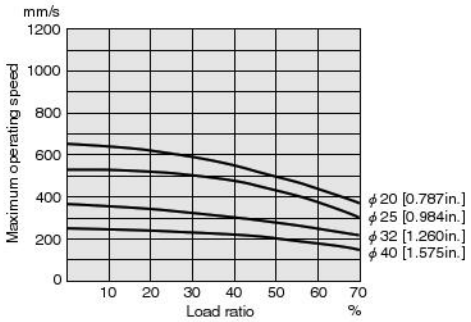

A110-4A-25

●Measurement conditions

- ●Air pressure : 0.5MPa {5.1kgf/cm²} [73psi.]
- ●Piping inner diameter and length : ϕ4 [0.16in.]×1000mm [39in.]
- ●Fitting : Quick fitting TS6-01
- ●Load ratio = $\frac{\text{Load}}{\text{Cylinder theoretical thrust}}$ (%)
- ●Cylinder stroke:150mm [5.91in.]

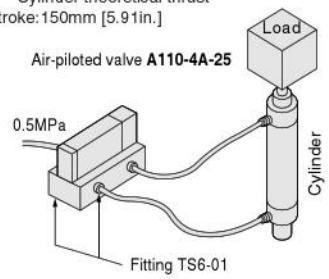

Maximum operating speed

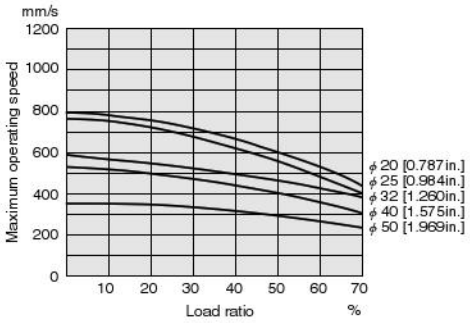

1mm/s = 0.0394in./sec.

Flow rate

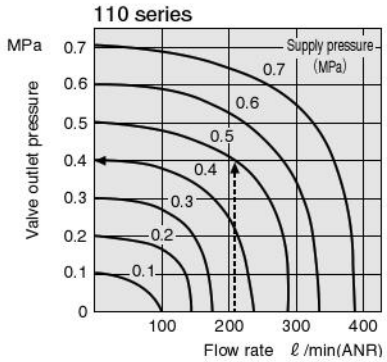

1MPa = 145psi., 1 ℓ/min = 0.0353 ft³/min.

How to read the graph

When the supply pressure is 0.5MPa [73psi.] and the flow rate is 210 ℓ/min [7.41ft³/min.] (ANR), the valve outlet pressure becomes 0.4 MPa [58psi.].

Operating Principles and Major Parts

5-port, 2-position

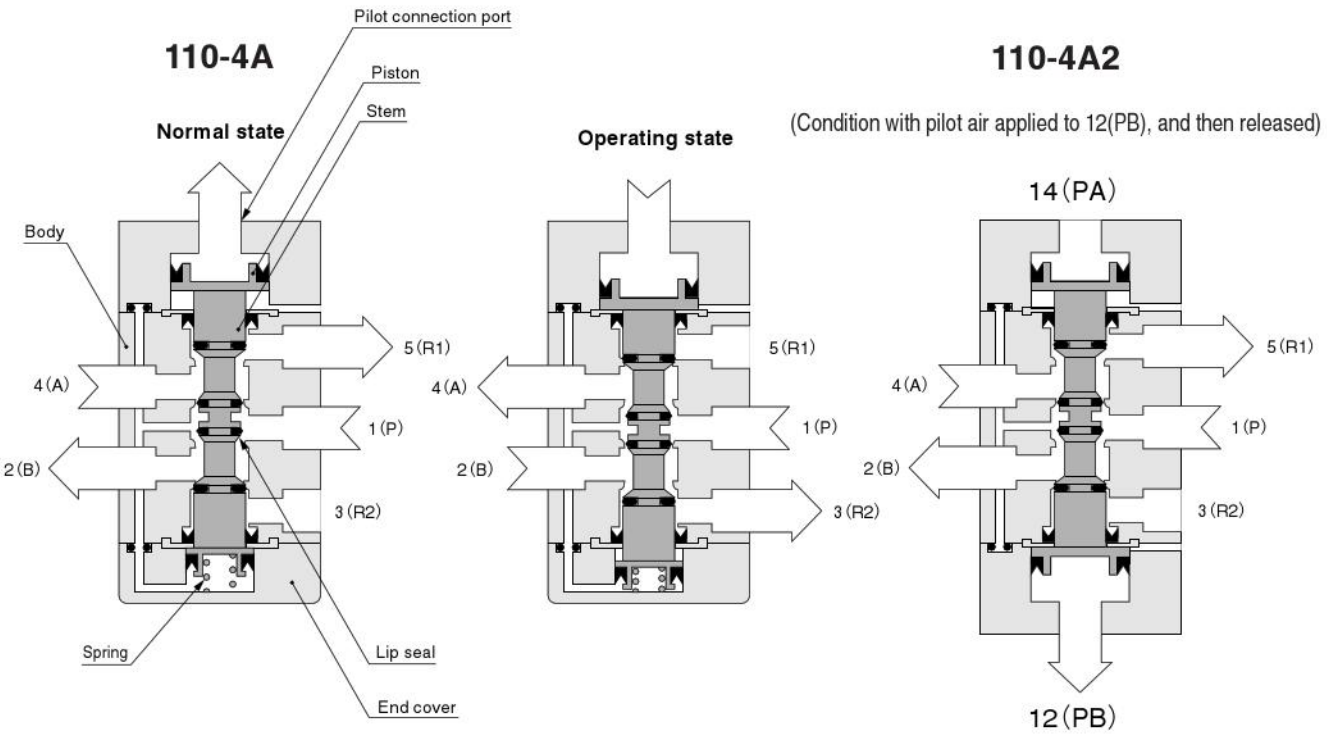

Major Parts and Materials

Parts	Materials
Body	Aluminum alloy (anodized)
Stem	
Lip seal	Synthetic rubber
Mounting base	Mild steel (zinc plated)
Sub-base	Aluminum alloy (anodized)

Dimensions of Air-piloted 5-port, 2-position Valve (mm)

110-4A

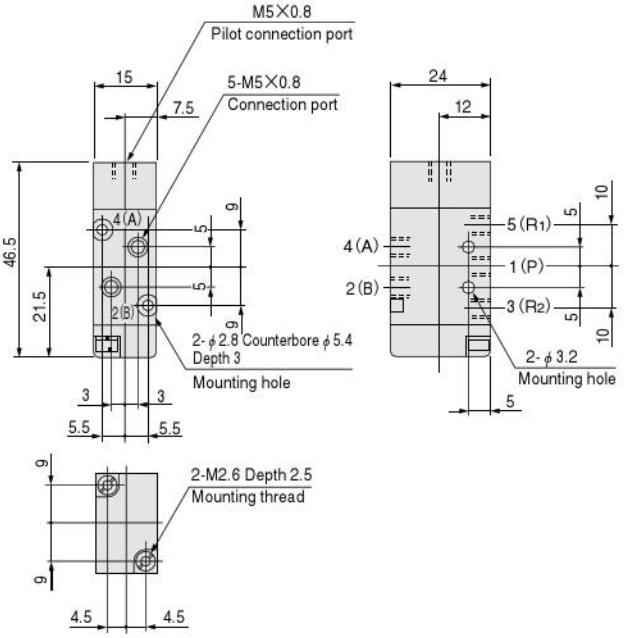

110-4A2

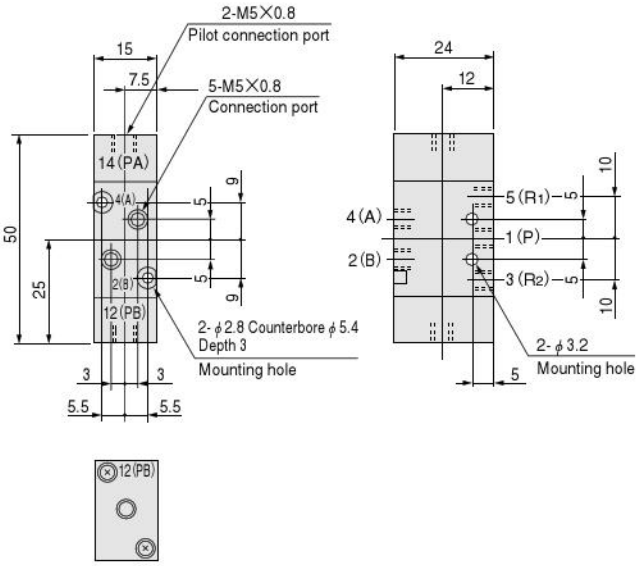

Options

●Mounting base : -21

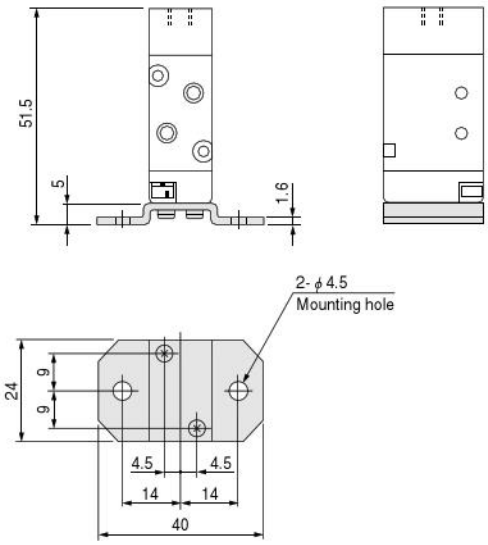

●With quick fittings: **-J42** (For φ4 tube, 4(A), 2(B) ports with fittings)
-J43 (For φ4 tube, 1(P), 4(A), 2(B) ports with fittings)
-J62 (For φ6 tube, 4(A), 2(B) ports with fittings)
-J63 (For φ6 tube, 1(P), 4(A), 2(B) ports with fittings)
The drawing shows the -J43 specification.

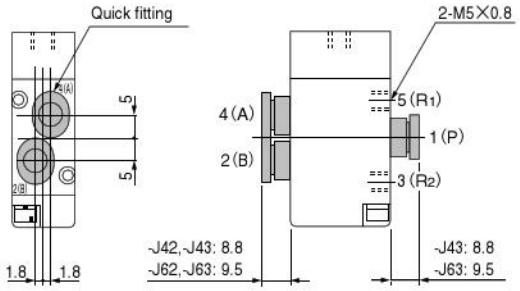

●Speed controller : **-70**

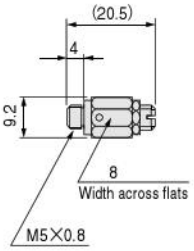

●Muffler : **-75**

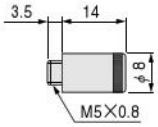

Dimensions of Air-piloted 5-port, 2-position Valve (mm)

A110-4A

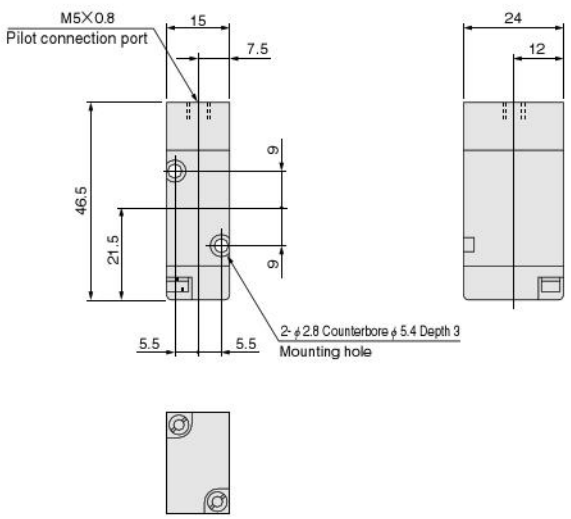

A110-4A2

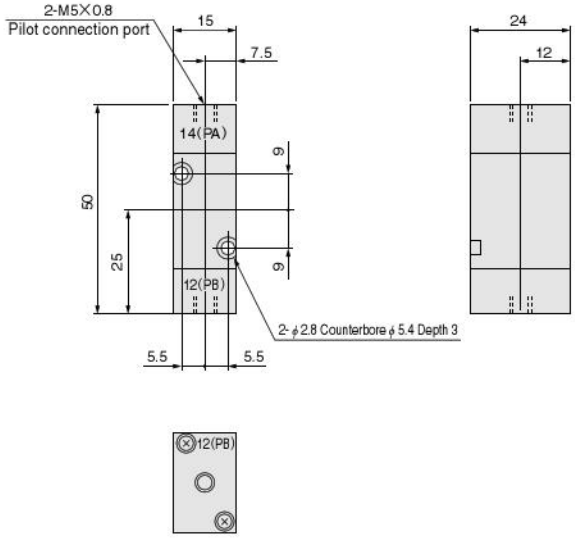

Options

●Sub-base : **-25**

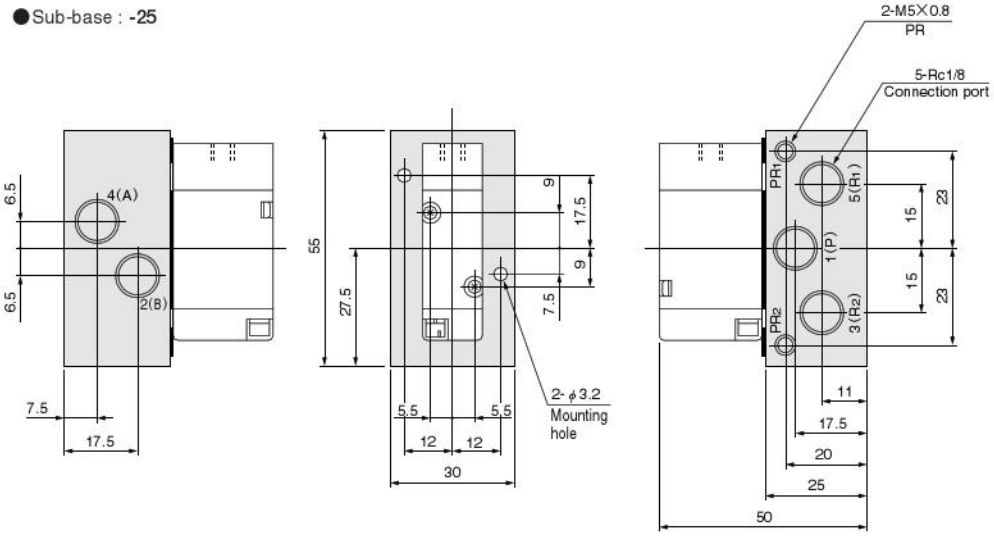

●Speed controller : **-70**

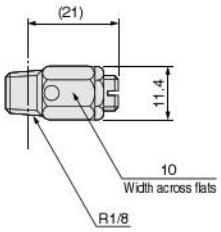

Solenoid

Internal circuit

●DC12V, DC24V

Standard solenoid (Surge suppression)

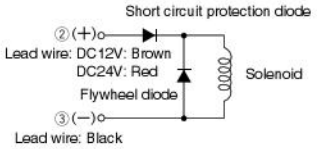

② and ③ are for with DIN connector (Order code : **-39**).

Solenoid with LED indicator (Surge suppression)
Order code : -PSL, -PLL

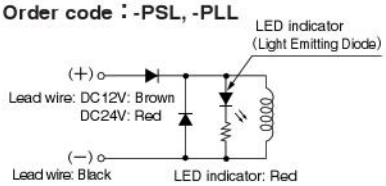

●AC100V, AC200V

Standard solenoid (Surge suppression)

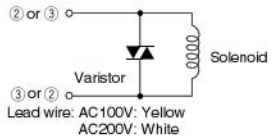

② and ③ are for with DIN connector (Order code : **-39**).

Solenoid with LED indicator (Surge suppression)
Order code : -PSL, -PLL

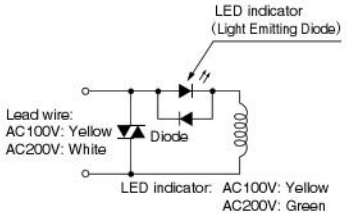

●DC24V

Tandem solenoid

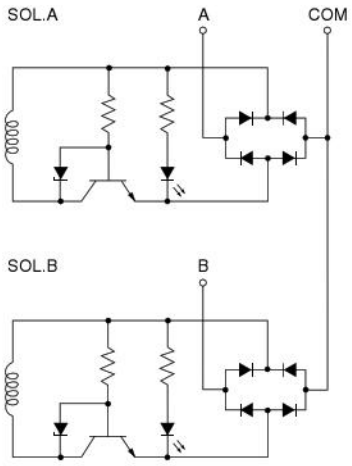

Cautions: 1. Do not apply megger between the lead wires.
2. The DC solenoid will not short circuit even if the wrong polarity is applied, but the valve will not operate.
3. Leakage current inside the circuit could result in failure of the solenoid valve to return, or in other erratic operation. Always use it within the range of the allowable leakage current. If circuit conditions, etc. cause the leakage current to exceed the allowable leakage current, consult us.
4. For double solenoid and twin solenoid, avoid energizing both solenoids simultaneously. The valve could fall into a neutral position.

Plug connector

Attaching and removing plug connector

Use fingers to insert the connector into the pin, push it in until the lever claw latches onto the protruded section of the connector housing, and complete the connection.
To remove the connector, squeeze the lever along with the connector, lift the lever claw up from the protruded section of the connector housing, and pull it out.

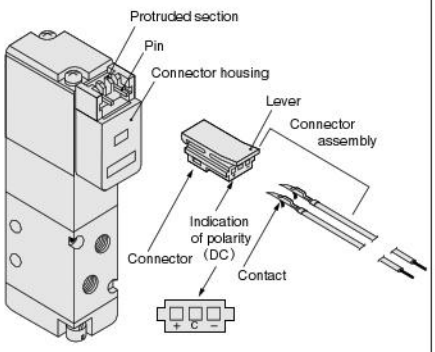

※Illustration shows the 110 series.

Crimping of connecting lead wire and contact

To crimp lead wires into contacts, strip off 4mm [0.16in.] of the insulation from the end of the lead wire, insert it into the contact, and crimp it. Be sure to avoid catching the insulation on the exposed wire crimping section.

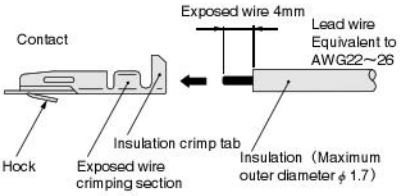

Cautions: 1. Do not pull hard on the lead wire.
2. Always use a dedicated tool for crimping of connecting lead wire and contact.
Contact: Model 702062-2M
Manufactured by Sumiko Tech, Inc.
Crimping tool: Model F1-702062
Manufactured by Sumiko Tech, Inc.

Attaching and removing contact and connector

Insert the contact with a lead wire into a plug connector □ hole until the contact hook latches on the connector and is secured to the plug connector. Confirm that the lead wire cannot be easily pulled out.
To remove it, insert a tool with a fine tip (such as a small screwdriver) into the rectangular hole on the side of the plug connector to push up on the hook, and then pull out the lead wire.

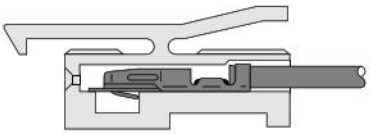

Cautions: 1. Do not pull hard on the lead wire.It could result in defective contacts, breaking wires, etc.
2. If the pin is bent, use a small screwdriver, etc. to gently straighten out the pin, and then complete the connection to the plug connector.

Common terminal pre-wired plug connector

1. Pre-wired common terminal at DC positive side or AC.
Order code With straight connector: -CPSL
With L connector: -CPLL

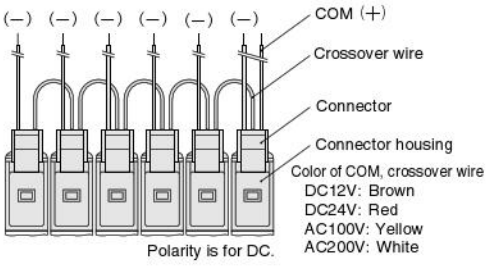

2. Pre-wired common terminal at DC negative side
Order code With straight connector: -CMSL
With L connector: -CMLL

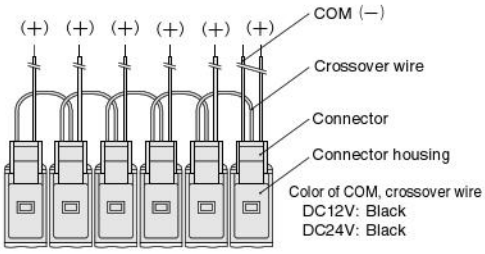

Cautions: 1. The diagrams show the straight connector configuration.
While the connector's orientation is different in the case of the L connector, in every case the first COM lead wire comes from the last station's mounted valve.
2. Since the COM terminal is connected to a crossover terminal inside the connector housing, the connector cannot be switched between a positive common and a negative common by changing the connectors.

Manual override

Non-locking type

To operate the manual override, press it all the way down. The single solenoid valve works the same as when in the energized state as long as the manual override is pushed down, and returns to the normal position upon release.
For the double solenoid and twin solenoid valves, pressing the manual override on the 12(S1) side switches the 12(S1) to enter the energized position, and the unit remains in that state even after the manual override is released. To return it to the normal position, operate the manual override on the 14(S2) side. This is the same for the solenoid 14(S2).

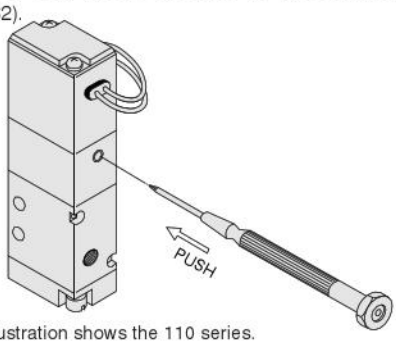

※Illustration shows the 110 series.

Locking protruding type

Use a small screwdriver to turn the adjusting knob several times in the clockwise direction, and lock the manual override in place. When locked, turning the adjusting knob several times in the counterclockwise direction releases a spring on the manual override, returns it to the normal position, and releases the lock.
For the locking protruding type, when the adjusting knob is not turned, this type acts just like the non-locking type, like the valve is the energized position as long as the manual override is pushed down, and it returns to the normal position upon release.

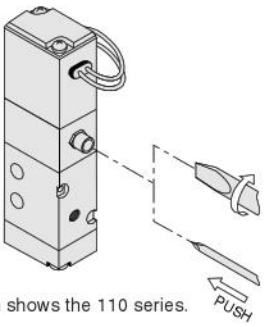

※Illustration shows the 110 series.

Cautions: **1.** The 110 series valves are internal pilot type solenoid valves. As a result, the manual override cannot switch the main valve without air supplied from the 1(P) port.
2. Always release the lock of the locking type and locking protruding type manual override before commencing normal operation.
3. Do not attempt to operate the manual override with a pin or other object having an extremely fine tip. It could damage the manual override button.
4. Do not turn the adjusting knob more than needed. It could result in defective operation.

Manual override (Tandem solenoid)

Locking type

To lock the locking type manual override, use a small screwdriver to push down the manual override in all the way, then set the 0 position as the reference point and turn it in the clockwise direction as far as position A. This achieves the same conditions as when the 14(SA) side is energized, and the manual override is locked in place. For the 12(SB) side, turn it in the counterclockwise direction as far as position B. To release the lock, return the manual override to the 0 position. A spring mechanism returns the manual override to its normal position, and the lock is released. Care should be taken to avoid excessive turning of the manual override, which could damage it.

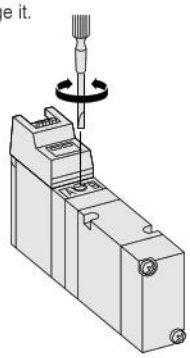

Locking protruding type, locking manual lever type

To lock the locking protruding type manual override or locking manual lever type, use either a small screwdriver or your fingertips to push the manual override button (manual lever) all the way down, then set the 0 position as the reference point and turn it in the clockwise direction as far as position A. This achieves the same conditions as when the 14(SA) side is energized, and the manual override button (manual lever) is locked in place. For the 12(SB) side, turn it in the counterclockwise direction as far as position B. To release the lock, return the manual override button (manual lever) to the 0 position. A spring mechanism returns the manual override button (manual lever) to its normal position, and the lock is released. Care should be taken to avoid excessive turning of the manual override button (manual lever), which could damage it.

Locking protruding type manual override

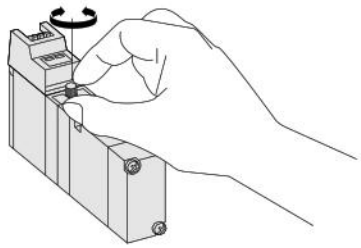

Locking manual lever type

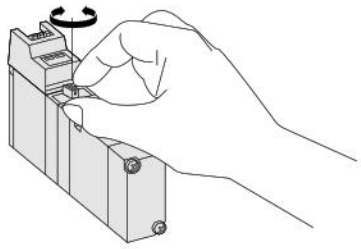

Cautions: **1.** The 110 series valves are internal pilot type solenoid valves. As a result, the manual override cannot switch the main valve without air supplied from the 1(P) port.
2. Always release the lock of the locking protruding type manual override before commencing normal operation.
3. Do not attempt to operate the manual override with a pin or other object having an extremely fine tip. It could damage the manual override button.
4. Do not turn the adjusting knob more than needed. It could result in defective operation.

Mounting base 110-21

When installing a mounting base to the valve, always use the provided screws. The recommended tightening torque for the screws is 49N·cm {5kgf·cm} [4.3in·lbf].

Mounting valves on manifold

When mounting valves on manifold, apply the recommended tightening torque of 39.2N·cm {4kgf·cm} [3.5in·lbf] for the valve mounting screws.

Solenoid

Circuit configurations

● **For positive common type (standard)**

Operation example

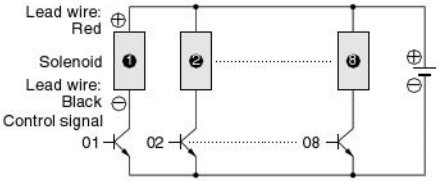

Correspondence to sequencer

Output module is negative common type.

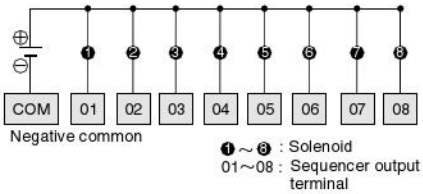

●**For negative common type (optional: -CM)**

Operation example

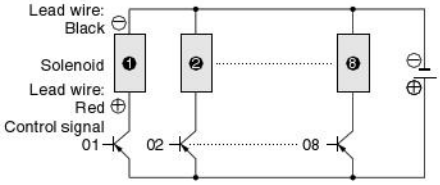

Correspondence to sequencer

Output module is positive common type.

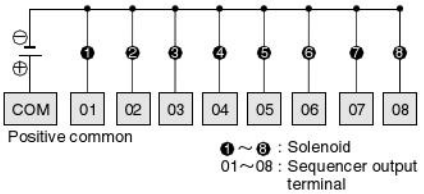

Plug connector

Attaching and removing plug connector

Use fingers to insert the connector into the pin, push it in until the lever claw latches onto the protruded section of the connector housing, and complete the connection.
To remove the connector, squeeze the lever along with the connector, lift the lever claw up from the protruded section of the connector housing, and pull it out.

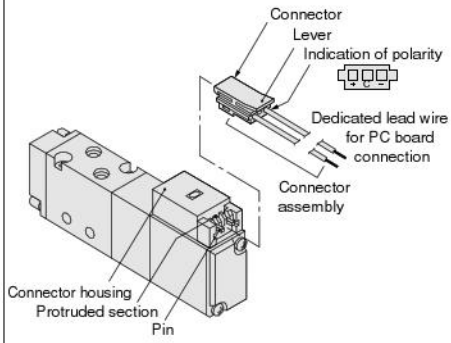

Cautions: 1. Do not pull hard on the lead wire.It could result in defective contacts, breaking wires, etc.
2. If the pin is bent, use a small screwdriver, etc. to gently straighten out the pin, and then complete the connection to the plug connector.

Connector for flat cable

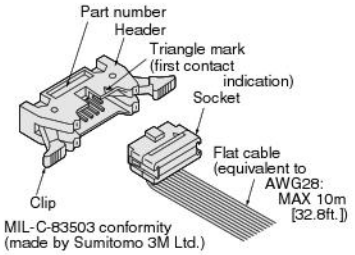

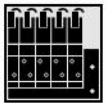

Manifold

Print circuit board

Avoid using in the locations listed below, as it may result in deterioration of the print circuit board or a short circuit in the wiring. If use in such conditions is unavoidable, always provide a cover or other adequate protective measures.

1. Locations subject to high levels of dust or oil mists
2. Locations subject to salt, corrosive gases, or conductive particles
3. Locations directly subject to condensation, direct sunlight, or other weather effects

Combination mounting for different type of valves

In the 110 series manifold for combination mounting of 2-, 3-, 5-port, and the PC board manifold for combination mounting of 2-, 3-, 5-port, single solenoids can be mounted together with double solenoids, or with twin solenoids, and a total number of up to 8 or 16 solenoids can be mounted.
In this case, observe the following precautions:

1. Always use a block-off plate (-BP) to close the next right station (the side with the higher numbered station) of the double solenoid valve mounting station.
2. When using block-off plates (-BP) for some reason other than item 1, place them together on the higher numbered stations side.
3. Connector pin numbers are allocated to stations in order from the left end of the manifold. For a double solenoid mounting, the upper pins are allocated to 14(S2) and the lower ones to 12(S1), with the upper 14(S2) numbers being the smaller pin numbers. And for a twin solenoid mounting, the left side is allocated to 14(S2) and the right side allocated to 12(S1), with the left side 14(S2) numbers being the smaller pin numbers.

Example of 4 single solenoid valves and 2 double solenoid valves installation on an 8 unit manifold:

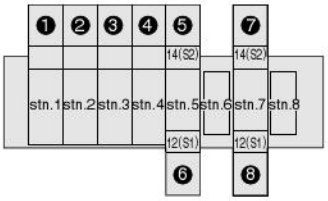

Connector pin location of 8 units:

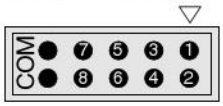

Remark: The standard is positive common wiring. Negative common wiring is optional (-CM).

Example of 3 single solenoid valves and 2 double solenoid valves installation on an 8 unit manifold:

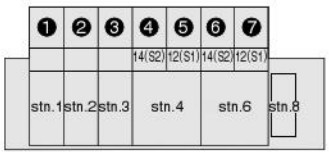

Connector pin location of 8 units:

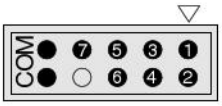

Remark: The standard is positive common wiring. Negative common wiring is optional (-CM).